Series AM3T-RZ

3 Watt | DC-DC Converter



FEATURES:

- RoHS compliant
- Wide 2:1 input range
- High efficiency up to 82%
- Auto recovery short circuit protection
- Operating temperature -40°C to + 85°C
- Input / Output Isolation 1500VDC
- Pin compatible with multiple manufacturers
- Low profile metal package

Models
Single output

Model	Input Voltage (V)	Output Voltage (V)	Output Current max (mA)	Isolation (VDC)	Capacitive load, max (µF)	Efficiency (%)
AM3T-1203S-RZ	9-18	3.3	900	1500	470	72
AM3T-1205S-RZ	9-18	5	600	1500	470	76
AM3T-1207S-RZ	9-18	7.2	417	1500	68	78
AM3T-1209S-RZ	9-18	9	333	1500	68	78
AM3T-1212S-RZ	9-18	12	250	1500	47	80
AM3T-1215S-RZ	9-18	15	200	1500	47	80
AM3T-1218S-RZ	9-18	18	167	1500	22	80
AM3T-1224S-RZ	9-18	24	125	1500	22	80
AM3T-2403S-RZ	18-36	3.3	900	1500	470	72
AM3T-2405S-RZ	18-36	5	600	1500	470	76
AM3T-2407S-RZ	18-36	7.2	417	1500	68	79
AM3T-2409S-RZ	18-36	9	333	1500	68	78
AM3T-2412S-RZ	18-36	12	250	1500	47	80
AM3T-2415S-RZ	18-36	15	200	1500	47	82
AM3T-2418S-RZ	18-36	18	167	1500	22	79
AM3T-2424S-RZ	18-36	24	125	1500	22	82
AM3T-4803S-RZ	36-72	3.3	900	1500	470	72
AM3T-4805S-RZ	36-72	5	600	1500	470	76
AM3T-4807S-RZ	36-72	7.2	417	1500	68	77
AM3T-4809S-RZ	36-72	9	333	1500	68	78
AM3T-4812S-RZ	36-72	12	250	1500	47	80
AM3T-4815S-RZ	36-72	15	200	1500	47	80
AM3T-4818S-RZ	36-72	18	167	1500	22	80
AM3T-4824S-RZ	36-72	24	125	1500	22	80

Models
Dual output

Model	Input Voltage (V)	Output Voltage (V)	Output Current max (mA)	Isolation (VDC)	Capacitive load, max (µF)	Efficiency (%)
AM3T-1203D-RZ	9-18	±3.3	±450	1500	±220	72
AM3T-1205D-RZ	9-18	±5	±300	1500	±220	76
AM3T-1207D-RZ	9-18	±7.2	±208	1500	±33	78
AM3T-1209D-RZ	9-18	±9	±167	1500	±33	80
AM3T-1212D-RZ	9-18	±12	±125	1500	±22	80
AM3T-1215D-RZ	9-18	±15	±100	1500	±22	80
AM3T-1218D-RZ	9-18	±18	±84	1500	±10	78
AM3T-1224D-RZ	9-18	±24	±63	1500	±10	80
AM3T-2403D-RZ	18-36	±3.3	±450	1500	±220	72
AM3T-2405D-RZ	18-36	±5	±300	1500	±220	78
AM3T-2407D-RZ	18-36	±7.2	±208	1500	±33	81
AM3T-2409D-RZ	18-36	±9	±167	1500	±33	80
AM3T-2412D-RZ	18-36	±12	±125	1500	±22	82
AM3T-2415D-RZ	18-36	±15	±100	1500	±22	82
AM3T-2418D-RZ	18-36	±18	±84	1500	±10	82
AM3T-2424D-RZ	18-36	±24	±63	1500	±10	82

Models

Dual output (continued)

Model	Input Voltage (V)	Output Voltage (V)	Output Current max (mA)	Isolation (VDC)	Capacitive load, max (µF)	Efficiency (%)
AM3T-4803D-RZ	36-72	±3.3	±450	1500	±220	72
AM3T-4805D-RZ	36-72	±5	±300	1500	±220	76
AM3T-4807D-RZ	36-72	±7.2	±208	1500	±33	78
AM3T-4809D-RZ	36-72	±9	±167	1500	±33	78
AM3T-4812D-RZ	36-72	±12	±125	1500	±22	80
AM3T-4815D-RZ	36-72	±15	±100	1500	±22	80
AM3T-4818D-RZ	36-72	±18	±84	1500	±10	78
AM3T-4824D-RZ	36-72	±24	±63	1500	±10	80

Input Specifications

Parameters	Nominal	Typical	Maximum	Units
Voltage range	12 24 48	9-18 18-36 36-72		VDC
Filter		π (Pi) Network		
Turn on Transient process time			350	ms
Start up time		500		ms
Absolute Maximum Rating	12 Vin 24 Vin 48 Vin	-0.7-24 -0.7-40 -0.7-80		VDC
Peak Input Voltage time		100		ms

Isolation Specifications

Parameters	Conditions	Typical	Rated	Units
Tested I/O voltage	3 sec		1500	VDC
Case/ Input & Output		1000		VDC
Resistance		> 1000		MOhm
Capacitance		470		pF

Output Specifications

Parameters	Conditions	Typical	Maximum	Units
Voltage accuracy		±1		%
Voltage balance Dual output		±1		%
Short Circuit protection		Continuous		
Short Circuit restart		Auto recovery		
Current limiting		120% of Iout max		
Line voltage regulation	LL-HL	±0.5		%
Load voltage regulation	Load: 10…100%	±0.5		%
Load voltage regulation 3.3V/±3.3V Models	Load: 10…100%	±1.5		%
Temperature coefficient		±0.02		%/°C
Ripple & Noise	At 20MHz Bandwidth	60		mV p-p
Rising time		10		ms

General Specifications

Parameters	Conditions	Typical	Maximum	Units
Switching frequency	100% load	266		KHz
Operating temperature	Full Load without Derating	-40 to +85		°C
Storage temperature		-40 to +125		°C
Max Case temperature			100	°C
Cooling		Free air convection		
Humidity			**95**	% RH

General Specifications (continued)

Parameters	Conditions	Typical	Maximum	Units
Case material		Nickel-coated copper		
Weight		17		g
Dimensions(L x W x H)	Tolerance ±0.5 mm or ±0.02 inches	1.28 x 0.84 x 0.41 inches	32.25 x 21.35 x 10.5 mm	
MTBF	>1 121 000 hrs (MIL-HDBK -217F, Ground Benign, t=+25°C)			

NOTE: All specifications in this datasheet are measured at an ambient temperature of 25°C, humidity<75%, nominal input voltage and at rated output load unless otherwise specified.

Safety Specifications

Parameters	
Agency approvals	CE
Safety standards	EN55022 Class A, EN55024
	IEC61000-4-2, Perf. Criteria B
	IEC61000-4-3, Perf. Criteria A
	IEC61000-4-4, Perf. Criteria B (external 220uF/100V cap required)
	IEC61000-4-5, Perf. Criteria B (external 220uF/100V cap required)
	IEC61000-4-6, Perf. Criteria A
	IEC61000-4-8, Perf. Criteria A
	NOTE: also designed to meet IEC 60950-1:2001

Pin Out Specifications

Pin	1500VDC	
	Single	Dual
2	-V Input	-V Input
3	-V Input	-V Input
9	No pin	Common
11	N.C.	-V Output
14	+V Output	+V Output
16	-V Output	Common
22	+V Input	+V Input
23	+V Input	+V Input

Dimensions

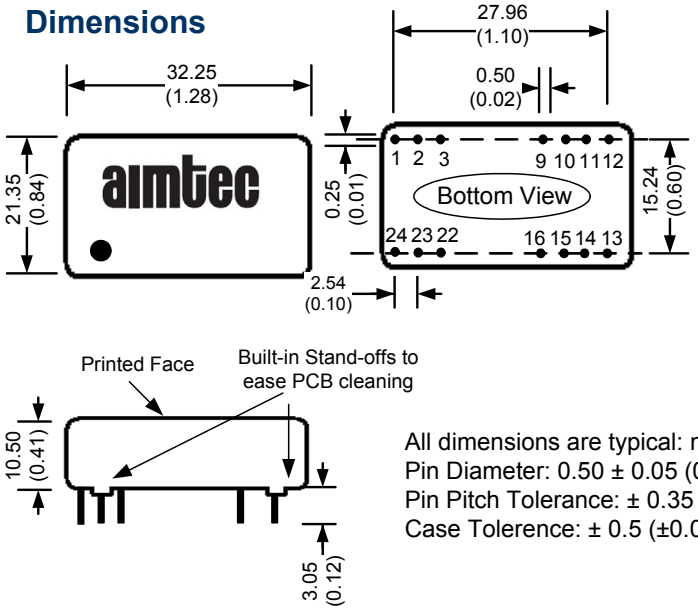

All dimensions are typical: millimeters (inches)
Pin Diameter: 0.50 ± 0.05 (0.02 ± 0.002)
Pin Pitch Tolerance: ± 0.35 (±0.014)
Case Tolerence: ± 0.5 (±0.02)

Test Circuits

Conducted Emissions:

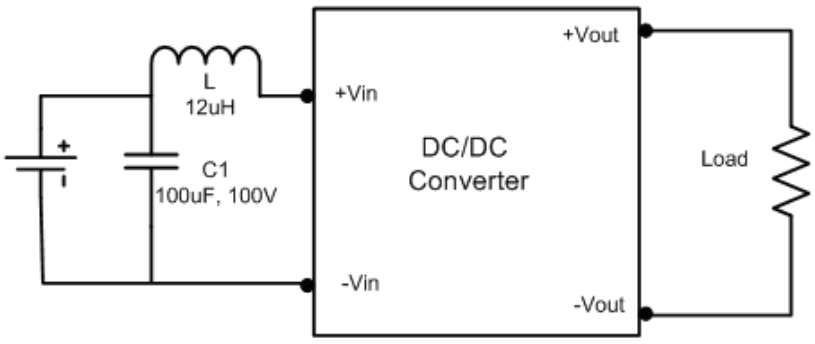

Surge:

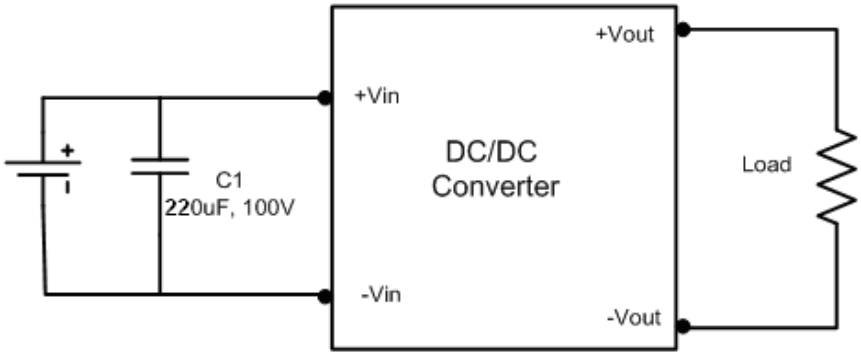

NOTE: 1. Datasheets are updated as needed and as such, specifications are subject to change without notice. Once printed or downloaded, datasheets are no longer controlled by Aimtec; refer to www.aimtec.com for the most current product specifications. **2.** Product labels shown, including safety agency certifications on labels, may vary based on the date manufactured. **3.** Mechanical drawings and specifications are for reference only. **4.** All specifications are measured at an ambient temperature of 25°C, humidity<75%, nominal input voltage and at rated output load unless otherwise specified. **5.** Aimtec may not have conducted destructive testing or chemical analysis on all internal components and chemicals at the time of publishing this document. CAS numbers and other limited information are considered proprietary and may not be available for release. **6.** This product is not designed for use in critical life support systems, equipment used in hazardous environments, nuclear control systems or other such applications which necessitate specific safety and regulatory standards other the ones listed in this datasheet. **7.** Warranty is in accordance with Aimtec's standard Terms of Sale available at www.aimtec.com.