aimtec
Your Power Partner

Series AM3TIW-RZ

3 Watt | DC-DC Converter



FEATURES:

- No Minimum Load
- 24 Pin DIP Package
- Wide 4:1 Input Range
- High Efficiency up to 82%
- Over Load Protection
- Operating Temperature -40 to +85°C
- Input / Output Isolation 1500 or 3000 VDC
- Internal EMC Filter Meets EN55022 Class A
- Continuous Short Circuit Protection
- Input Under Voltage Protection

Models
Single output

Model	Input Voltage (V)	Output Voltage (V)	Output Current Max (mA)	Isolation (VDC)	Max Capacitive Load (uF)	Input Current Full | No Load (mA)		Efficiency (%)
AM3TIW-2403S-RZ	9-36	3.3	900	1500	470	167	10	75
AM3TIW-2405S-RZ	9-36	5	600	1500	470	160	10	79
AM3TIW-2412S-RZ	9-36	12	250	1500	100	156	10	81
AM3TIW-2415S-RZ	9-36	15	200	1500	100	154	10	82
AM3TIW-2424S-RZ	9-36	24	125	1500	47	154	10	82
AM3TIW-4803S-RZ	18-75	3.3	900	1500	470	84	7	75
AM3TIW-4805S-RZ	18-75	5	600	1500	470	80	7	79
AM3TIW-4812S-RZ	18-75	12	250	1500	100	78	7	81
AM3TIW-4815S-RZ	18-75	15	200	1500	100	77	7	82
AM3TIW-4824S-RZ	18-75	24	125	1500	47	77	7	82
AM3TIW-2403SH30-RZ	9-36	3.3	900	3000	470	167	10	75
AM3TIW-2405SH30-RZ	9-36	5	600	3000	470	160	10	79
AM3TIW-2412SH30-RZ	9-36	12	250	3000	100	156	10	81
AM3TIW-2415SH30-RZ	9-36	15	200	3000	100	154	10	82
AM3TIW-2424SH30-RZ	9-36	24	125	3000	47	154	10	82
AM3TIW-4803SH30-RZ	18-75	3.3	900	3000	470	84	7	75
AM3TIW-4805SH30-RZ	18-75	5	600	3000	470	80	7	79
AM3TIW-4812SH30-RZ	18-75	12	250	3000	100	78	7	81
AM3TIW-4815SH30-RZ	18-75	15	200	3000	100	77	7	82
AM3TIW-4824SH30-RZ	18-75	24	125	3000	47	77	7	82

Models
Dual output

Model	Input Voltage (V)	Output Voltage (V)	Output Current max (mA)	Isolation (VDC)	Max Capacitive Load (uF)	Input Current Full | No Load (mA)		Efficiency (%)
AM3TIW-2403D-RZ	9-36	±3.3	±450	1500	±220	167	10	75
AM3TIW-2405D-RZ	9-36	±5	±300	1500	±220	160	10	79
AM3TIW-2412D-RZ	9-36	±12	±125	1500	±100	156	10	81
AM3TIW-2415D-RZ	9-36	±15	±100	1500	±100	156	15	81
AM3TIW-2424D-RZ	9-36	±24	±63	1500	±47	159	20	80
AM3TIW-4803D-RZ	18-75	±3.3	±450	1500	±220	84	7	75
AM3TIW-4805D-RZ	18-75	±5	±300	1500	±220	78	7	81
AM3TIW-4812D-RZ	18-75	±12	±125	1500	±100	78	7	81
AM3TIW-4815D-RZ	18-75	±15	±100	1500	±100	78	7	81
AM3TIW-4824D-RZ	18-75	±24	±63	1500	±47	81	10	79
AM3TIW-2403DH30-RZ	9-36	±3.3	±450	3000	±220	167	10	75
AM3TIW-2405DH30-RZ	9-36	±5	±300	3000	±220	160	10	79
AM3TIW-2412DH30-RZ	9-36	±12	±125	3000	±100	156	10	81
AM3TIW-2415DH30-RZ	9-36	±15	±100	3000	±100	156	15	81
AM3TIW-2424DH30-RZ	9-36	±24	±63	3000	±47	159	20	80
AM3TIW-4803DH30-RZ	18-75	±3.3	±450	3000	±220	84	7	75
AM3TIW-4805DH30-RZ	18-75	±5	±300	3000	±220	78	7	81

Models

Dual output (continued)

Model	Input Voltage (V)	Output Voltage (V)	Output Current max (mA)	Isolation (VDC)	Max Capacitive Load (uF)	Input Current Full | No Load (mA)		Efficiency (%)
AM3TIW-4812DH30-RZ	18-75	±12	±125	3000	±100	78	7	81
AM3TIW-4815DH30-RZ	18-75	±15	±100	3000	±100	78	7	81
AM3TIW-4824DH30-RZ	18-75	±24	±63	3000	±47	81	10	79

Input Specifications

Parameters	Nominal	Typical	Maximum	Units
Voltage range	24	9-36		VDC
	48	18-75		
Filter	π (Pi) Network			
Startup time		20		ms
Absolute Maximum Rating	24 Vin 48 Vin		50 100	VDC
Input Reflected Ripple Current	Refer to application circuit	20		mA p-p
Under Voltage Lockout	24 Vin 48 Vin	(Model On / Off) 8.5 / 7.0 (Model On / Off) 16.5 / 14.5		VDC

Isolation Specifications

Parameters	Conditions	Typical	Rated	Units
Tested I/O voltage	60 sec		1500 or 3000	VDC
Resistance		> 1000		MOhm
Capacitance		1000		pF

Output Specifications

Parameters	Conditions	Typical	Maximum	Units
Voltage accuracy		±2		%
Voltage balance		±2		%
Short Circuit protection	Continuous			
Short circuit restart	Auto Recovery			
Over load protection	160% Iout			
Line voltage regulation		±0.5		%
Load voltage regulation	0 – 100% load	±1.2		%
Transient Recovery Time		300		µsec
Transient Deviation	Other models 3.3V single output models	±3 ±5		%
Cross Regulation (Dual)	25% min load one output & 100% load on other	±5		%
Temperature coefficient		±0.02		%/ºC
Ripple & Noise *	Other models 24V output models	80 100		mV p-p

*- 20MHz Bandwidth measured with 1µf capacitor

General Specifications

Parameters	Conditions	Typical	Maximum	Units
Switching frequency	100% load	330		KHz
Operating temperature	Derating above 70	-40 to +85		ºC
Storage temperature		-55 to +125		ºC
Max Case temperature			100	ºC
Cooling	Free air convection			
Humidity			95	%
Case material	Plastic (UL94V-0 rated)			
Weight		13		g

General Specifications (continued)

Parameters	Conditions	Typical	Maximum	Units
Dimensions (L x W x H)	Tolerance ±0.5 mm or ±0.02 inches	1.25 x 0.80 x 0.40 inches	31.75 x 20.32 x 10.16 mm	
MTBF	>800 000 hrs (MIL-HDBK -217F, Ground Benign, t=+25ºC)			

NOTE: All specifications in this datasheet are measured at an ambient temperature of 25°C, humidity<75%, nominal input voltage and at rated output load unless otherwise specified.

Safety Specifications

Parameters	
Agency Approval	CE/UL 60950-1, 62368-1
Standards	EN 55032 Class A
	IEC61000-4-2, Perf. Criteria A
	IEC61000-4-3, Perf. Criteria A
	IEC61000-4-4, Perf. Criteria A
	IEC61000-4-5, Perf. Criteria A
	IEC61000-4-6, Perf. Criteria A
	IEC61000-4-8, Perf. Criteria A

Pin Out Specifications

Pin	Single	Dual
2	-V Input	-V Input
3	-V Input	-V Input
9	Omitted	Common
11	N.C.	-V Output
14	+V Output	+V Output
16	-V Output	Common
22	+V Input	+V Input
23	+V Input	+V Input

Dimensions

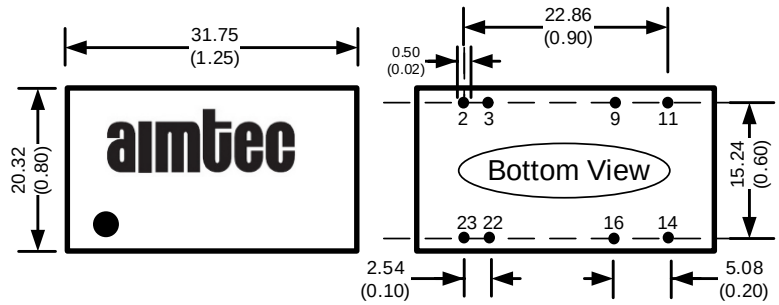

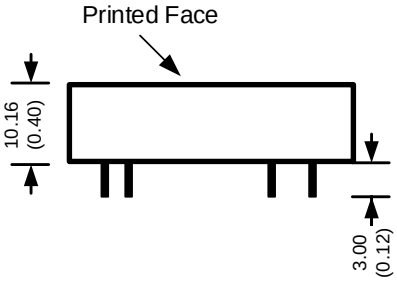

All dimensions are typical: millimeters (inches)
Pin Diameter: 0.50 ± 0.10 (0.02 ± 0.004)
Pin Pitch Tolerance: ± 0.35 (±0.014)
Case Tolerance: ± 0.5 (±0.02)

Derating

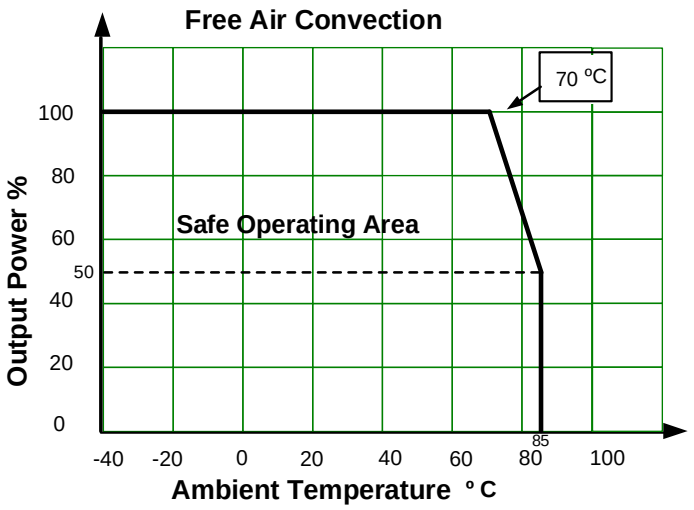

Input Reflected Ripple Current Test Circuit

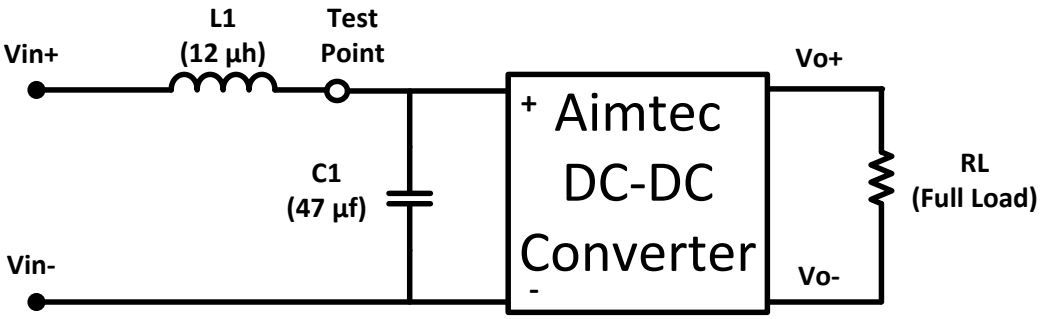

* Tested at full load, and nominal input

Typical Efficiency Example Charts

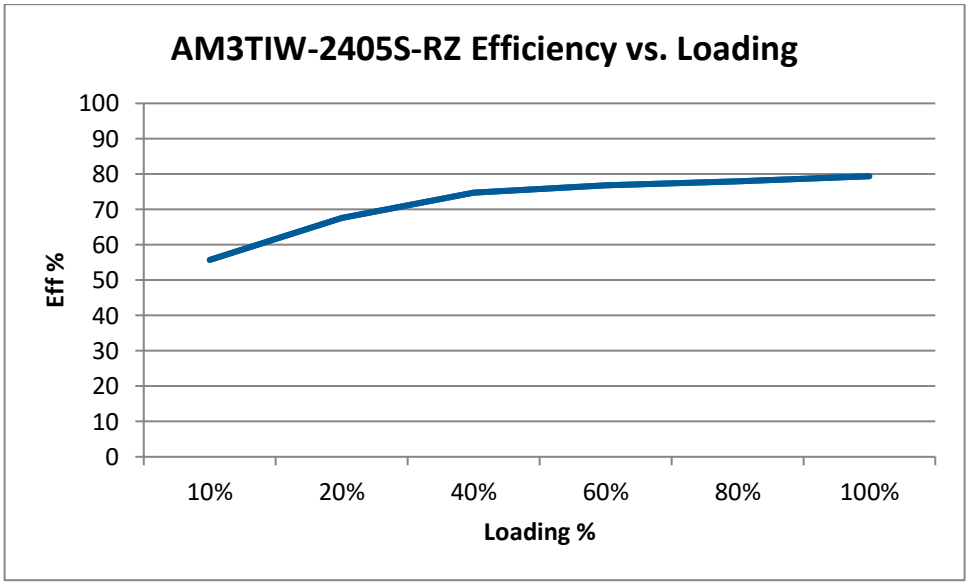

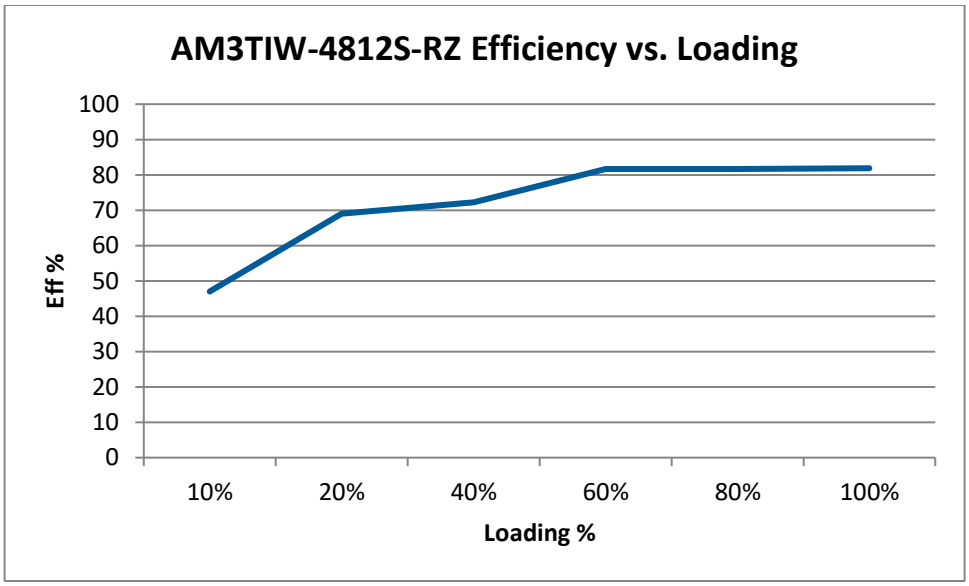

NOTE: 1. Datasheets are updated as needed and as such, specifications are subject to change without notice. Once printed or downloaded, datasheets are no longer controlled by Aimtec; refer to www.aimtec.com for the most current product specifications. **2.** Product labels shown, including safety agency certifications on labels, may vary based on the date manufactured. **3.** Mechanical drawings and specifications are for reference only. **4.** All specifications are measured at an ambient temperature of 25°C, humidity<75%, nominal input voltage and at rated output load unless otherwise specified. **5.** Aimtec may not have conducted destructive testing or chemical analysis on all internal components and chemicals at the time of publishing this document. CAS numbers and other limited information are considered proprietary and may not be available for release. **6.** This product is not designed for use in critical life support systems, equipment used in hazardous environments, nuclear control systems or other such applications which necessitate specific safety and regulatory standards other the ones listed in this datasheet. **7.** Warranty is in accordance with Aimtec's standard Terms of Sale available at www.aimtec.com.