AM40W-JZ



Encapsulated

The AM40W-JZ is a 40W DC/DC converter which provides an ultra-wide input voltage range of 250-1500VDC. It also features excellent reliability and performance while offering output voltages between 12 and 28V.

The converters also offer a wide operating temperature range of -40°C to +85°C with full power up to +55°C. Output short circuit protection (OSP), over current protection (OCP) and over voltage protection (OVP) come standard.

This series is available with an optional chassis mounting plate and DIN rail mount, which offers greater flexibility to the designer. This series is widely used for applications in renewable energy, such as power generation, energy storage, photovoltaic and other renewable energy related equipment.

Features

- Ultra-wide Input: 250 - 1500VDC
- Operating Temp: -40 °C to +85 °C
- High isolation voltage: 4000VAC
- Low ripple & noise, 150mV(p-p), typ.
- Output short circuit, over-current, over-voltage protection

RoHS

3yr Warranty

Summary

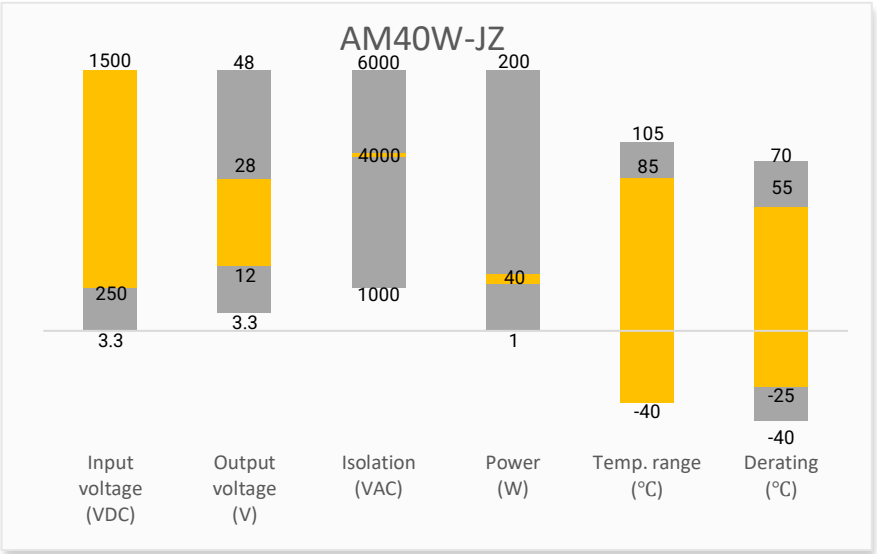

Training

Product Training Video
(click to open)

Press Release

Coming Soon!

Application Notes

Applications



Industrial

Power Grid

Renewable Energy

Models & Specifications

Single Output							
Model	Input Voltage (VDC)	Input Current max (mA)	Output Voltage (VDC)	Output Current max (A)	Isolation (VAC)	Maximum capacitive Load (µF)	Efficiency Typ. (%)
AM40W-80012SJZ	800 (250 - 1500)	80 (200 - 80)	12	3.34	4000	3000	86
AM40W-80024SJZ	800 (250 - 1500)	80 (200 - 80)	24	1.67	4000	820	89
AM40W-80028SJZ	800 (250 - 1500)	80 (200 - 80)	28	1.43	4000	820	89
Note: Use suffix "-ST" for chassis and suffix "-STD" for DIN-Rail mounting (ex. AM40W-80012SJZ-ST is chassis mounting and AM40W-80012SJZ-STD is DIN-Rail mounting version.)							

Input Specification				
Parameters	Conditions	Typical	Maximum	Units
Voltage range	Nominal 800	250 – 1500		VDC
Inrush current	800VDC/1500VDC	60/90		A
Input under voltage lockout	ON/OFF	140/180	240/250	VDC
Absolute maximum rating	Duration 10s max.		1700	VDC

Isolation Specification				
Parameters	Conditions	Typical	Maximum	Units
Tested I/O voltage	60 sec, leakage of 3mA max.	4000		VAC

Output Specification				
Parameters	Conditions	Typical	Maximum	Units
Voltage accuracy	0-100% load	±1.0	±2.0	%
Line regulation	Rated load	±0.5		%
Load regulation	800VDC	±0.5		%
Short circuit protection	Hiccup, Continuous, Auto recovery			
Over current protection	Auto recovery	≥110		% of Iout
Over voltage protection	12Vout model		20	VDC
	24Vout models		30	VDC
	28Vout models		35	VDC
Temperature coefficient		±0.02		%/°C
Ripple & Noise	20MHz bandwidth	150	200	mV pk-pk
Start-up delay time*	main input range	0.5	1	s
Hold-up time	Room temperature, full load, 800VDC	10		ms
* Full input voltage / output load range (The cooling-time between input power-off and power-on again is greater than 15s).				

General Specifications				
Parameters	**Conditions**	**Typical**	**Maximum**	**Units**
Switching frequency	Full load	65		KHz
Operating temperature	See derating graph	-40 to +85		°C
Storage temperature		-40 to +85		°C
Storage humidity	Non-condensing		95	% RH
Soldering temperature	Wave soldering, 5 - 10 sec.	260 ± 5		°C
	Manual welding, 3 - 5 sec.	360 ± 10		°C
Power derating	-40 °C ~ -25 °C, 250 ~ 300VDC	2.67		%/ °C
	55 °C ~ 70 °C	2.00		%/ °C
	70 °C ~ 85 °C	3.33		%/ °C
	250VDC ~ 300VDC	0.8		%/VDC
	2000m ~ 5000m	6.7		%/Km
Altitude			5000	m
Cooling	Free air convection			
Case material	Black flame-retardant and heat-resistant plastic (UL94-V0)			
Weight	PCB mountable models With optional -ST mounting plate With optional -STD mounting plate	270 350 420		g
Dimensions (L x W x H)	PCB mountable models With optional -ST mounting plate With optional -STD mounting plate	4.30 x 2.31 x 1.19 inches (109 × 58.5 × 30.0 mm) 5.32 x 2.76 x 1.52 inches (135 × 70.0 × 38.5 mm) 5.40 x 2.76 x 1.74 inches (137 × 70.0 × 44.0 mm)		
MTBF	> 300 000 hrs (MIL-HDBK -217F, t=+25°C)/Full Load			
All specifications in this datasheet are measured at an ambient temperature of 25°C, humidity<75%, nominal input voltage and at rated output load unless otherwise specified.				

Safety Specifications		
Parameters		
Standards	Information technology Equipment	Design to meet UL1741, EN62109-1
	EMI - Conducted and Radiated Emission	CISPR32/EN55032, Class A (with the recommended EMC circuit)
	Electrostatic Discharge Immunity	IEC/EN61000-4-2, Contact ±6KV / Air ±8KV, Criteria B
	RF, Electromagnetic Field Immunity	IEC/EN61000-4-3, 10V/m, Criteria A
	Electrical Fast Transient/Burst Immunity	IEC/EN61000-4-4, ±2KV, Criteria B IEC/EN61000-4-4, ±4KV, Criteria B (with the recommended EMC circuit)
	Surge Immunity	IEC/EN61000-4-5, ±1KV, Criteria B IEC/EN61000-4-5, ±2KV, Criteria B (with the recommended EMC circuit)
	RF, Conducted Disturbance Immunity	IEC/EN61000-4-6, 10Vr.m.s, Criteria A

Derating

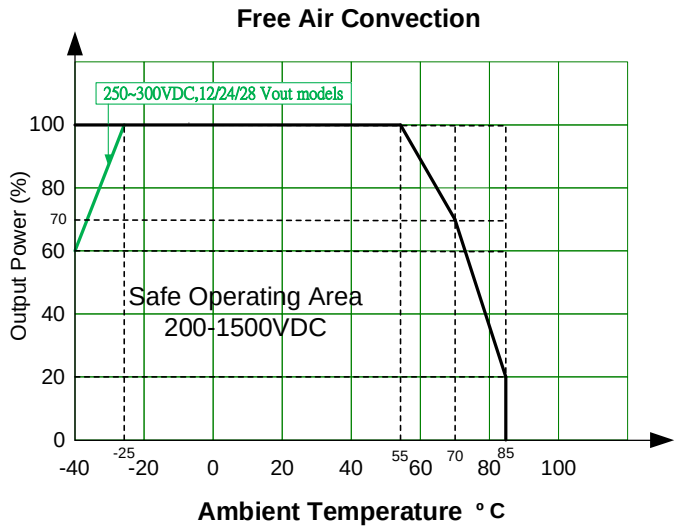

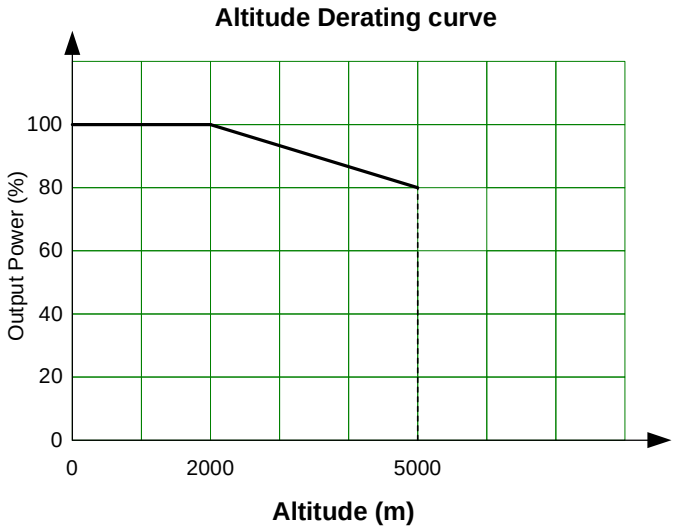

Typical Application Circuit

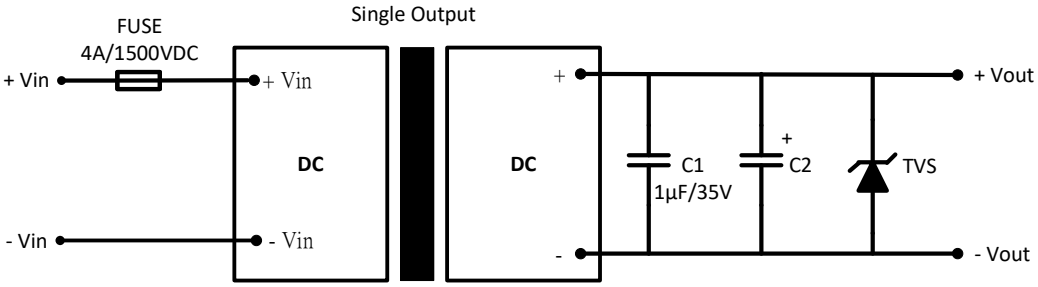

Model	C2	TVS
12Vout	120µF/25V	SMBJ20A
24Vout	68µF/35V	SMBJ30A
28Vout	68µF/50V	SMBJ36A

Note:
We recommend using an electrolytic capacitor with high frequency and low ESR rating for C2 (refer to manufacture's datasheet). Choose a capacitor voltage rating with at least 20% margin, in other words not exceeding 80%. C1 is a ceramic capacitor, used to filter high-frequency noise.
TVS is a recommended suppressor diode to protect the application in case of a converter failure.

EMC recommended Circuit

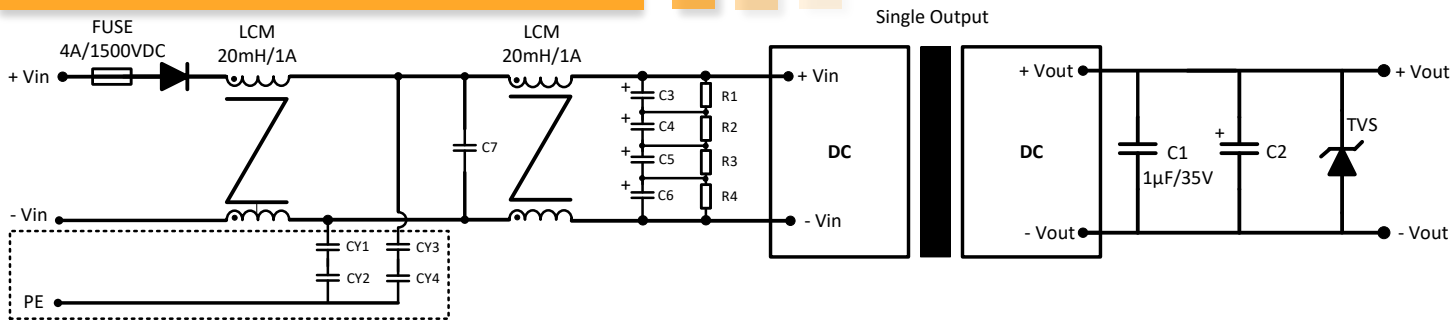

Component	Recommended value
C7	Safety Capacitor 474K/1500VDC
C3, C4, C5, C6	10μF/450VDC
R1, R2, R3, R4	1MΩ/2W
LCM1, LCM2	20mH/1A
CY1, CY2, CY3, CY4	104M/1500VDC
Fuse	4A/1500VDC, required
D1	4A/3000V
Note: 1 Adding D1 if there is a requirement of input reverse polarity protection for C3-C6. 2. Remove the dash line bracketed components if there is no requirement for emissions.	

Dimensions

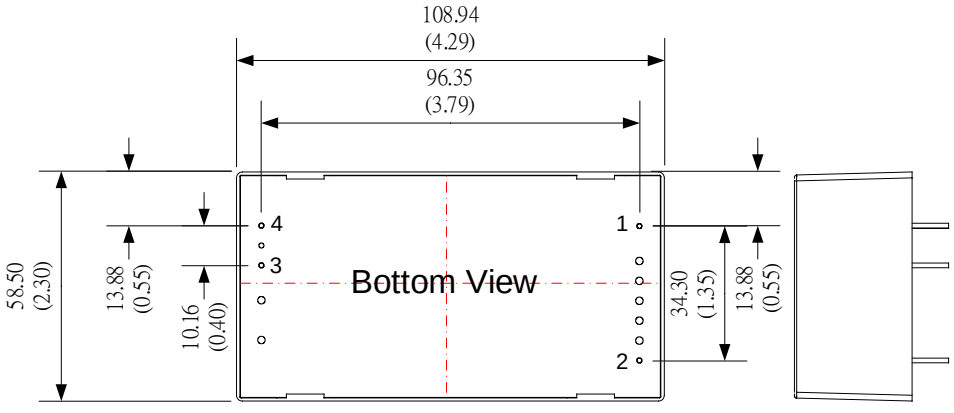

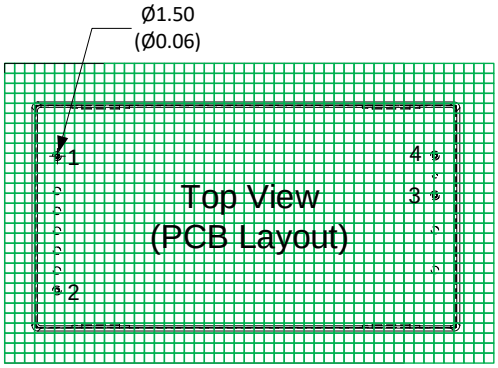

Grid 2.54 x 2.54

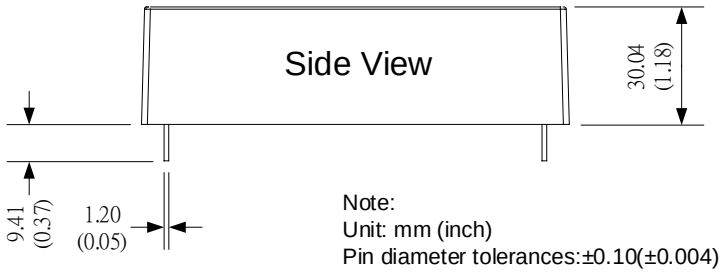

Note:
Unit: mm (inch)
Pin diameter tolerances:±0.10(±0.004)
Pin tolerances(H):±1.50(±0.059)
General tolerances:±0.50(0.020)

Pin Output Specifications	
Pin	Single
1	-V Input
2	+V Input
3	+V Output
4	-V Output

Dimensions with -ST option

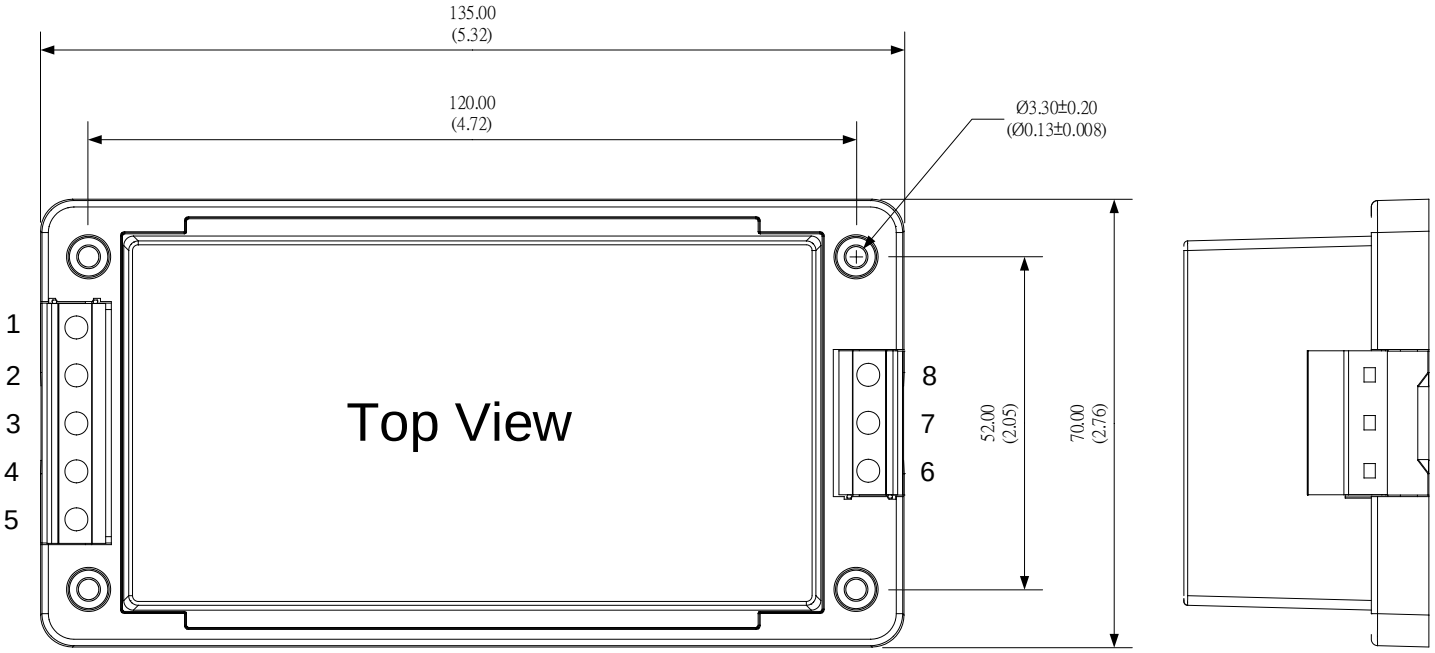

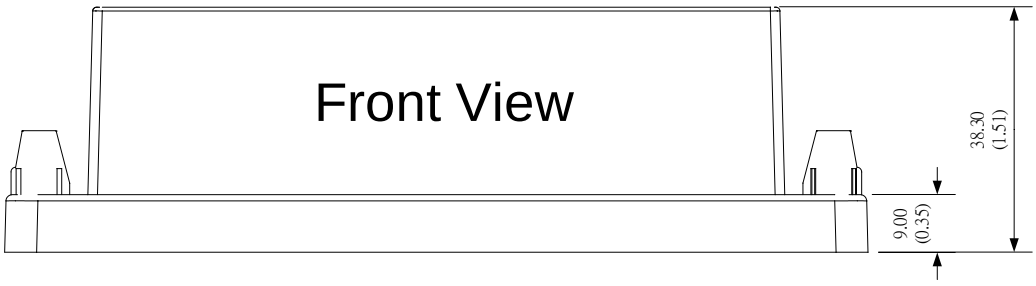

Pin Output Specifications	
Pin	Single
1	-V Input
2	NC
3	NC
4	NC
5	+V Input
6	NC
7	-V Output
8	+V Output

Note:
Unit: mm (inch)
Case Tolerance:±1.00 (0.04)
Wire Gauge: 24-12AWG

Downloaded from Arrow.com.

Dimensions with -STD option

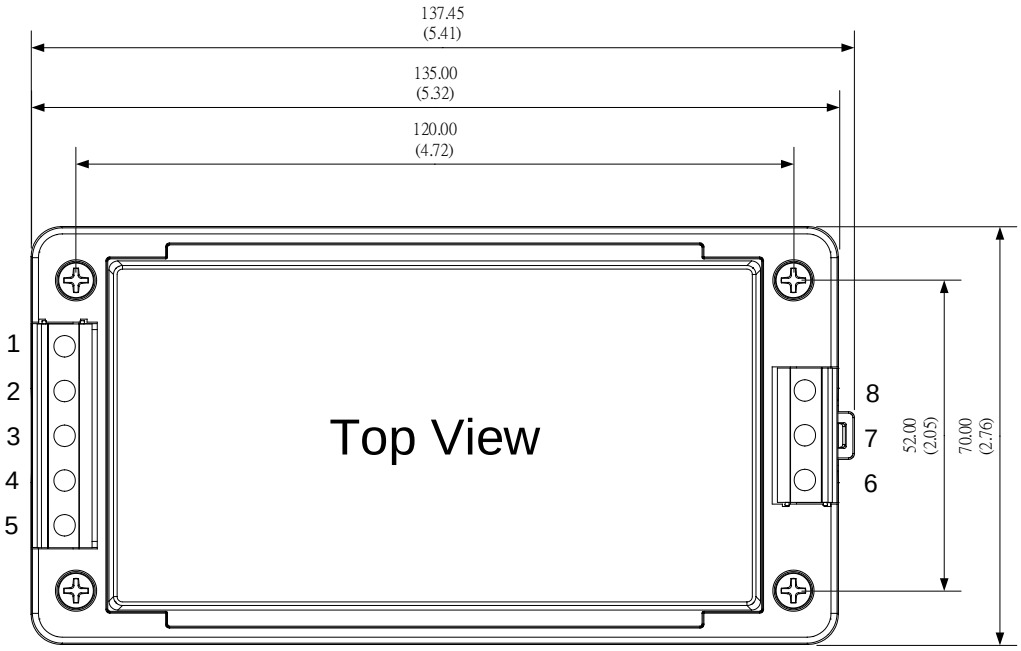

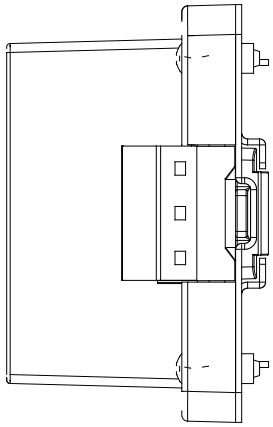

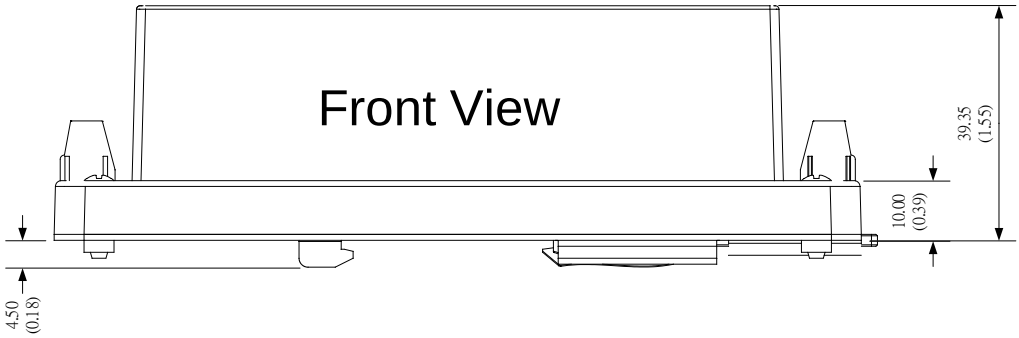

Pin Output Specifications	
Pin	Single
1	-V Input
2	NC
3	NC
4	NC
5	+V Input
6	NC
7	-V Output
8	+V Output

Note:
Unit: mm (inch)
Case Tolerance:±1.00 (0.04)
Wire Gauge: 24-12AWG
DIN Rail Type: TS35, Rail needs to be connected to safety ground

NOTE: 1. Datasheets are updated as needed and as such, specifications are subject to change without notice. Once printed or downloaded, datasheets are no longer controlled by Aimtec; refer to www.aimtec.com for the most current product specifications. **2.** Product labels shown, including safety agency certifications on labels, may vary based on the date manufactured. **3.** Mechanical drawings and specifications are for reference only. **4.** All specifications are measured at an ambient temperature of 25°C, humidity<75%, nominal input voltage and at rated output load unless otherwise specified. **5.** Aimtec may not have conducted destructive testing or chemical analysis on all internal components and chemicals at the time of publishing this document. CAS numbers and other limited information are considered proprietary and may not be available for release. **6.** This product is not designed for use in critical life support systems, equipment used in hazardous environments, nuclear control systems or other such applications which necessitate specific safety and regulatory standards other the ones listed in this datasheet. **7.** Warranty is in accordance with Aimtec's standard Terms of Sale available at www.aimtec.com.

Downloaded from Arrow.com.