aimtec
Your Power Partner

Series AM4TW-Z
4 Watt | DC-DC Converter



FEATURES:

- RoHS compliant
- 24 Pin DIP Package
- High efficiency up to 83%
- Wide 4:1 input range
- Operating temperature -40°C to + 85°C
- Input / Output Isolation 1500 or 3500VDC
- Pin compatible with multiple manufacturers
- Continuous short circuit protection

RoHS CE

Models
Single output

Model	Input Voltage (V)	Output Voltage (V)	Output Current max (mA)	Isolation (VDC)	Max Capacitive Load (uF)	Efficiency (%)
AM4TW-2403SZ	9-36	3.3	1200	1500	1000	75
AM4TW-2405SZ	9-36	5	800	1500	680	79
AM4TW-2407SZ	9-36	7.2	555	1500	100	80
AM4TW-2409SZ	9-36	9	444	1500	100	80
AM4TW-2412SZ	9-36	12	333	1500	100	82
AM4TW-2415SZ	9-36	15	266	1500	100	82
AM4TW-2418SZ	9-36	18	222	1500	100	81
AM4TW-2424SZ	9-36	24	166	1500	100	81
AM4TW-4803SZ	18-72	3.3	1200	1500	1000	75
AM4TW-4805SZ	18-72	5	800	1500	680	79
AM4TW-4807SZ	18-72	7.2	555	1500	680	81
AM4TW-4809SZ	18-72	9	444	1500	220	80
AM4TW-4812SZ	18-72	12	333	1500	220	82
AM4TW-4815SZ	18-72	15	266	1500	68	82
AM4TW-4818SZ	18-72	18	222	1500	47	80
AM4TW-4824SZ	18-72	24	166	1500	47	80
AM4TW-2403SH35Z	9-36	3.3	1200	3500	1000	75
AM4TW-2405SH35Z	9-36	5	800	3500	680	79
AM4TW-2407SH35Z	9-36	7.2	555	3500	100	80
AM4TW-2409SH35Z	9-36	9	444	3500	100	80
AM4TW-2412SH35Z	9-36	12	333	3500	100	82
AM4TW-2415SH35Z	9-36	15	266	3500	100	82
AM4TW-2418SH35Z	9-36	18	222	3500	100	81
AM4TW-2424SH35Z	9-36	24	166	3500	100	81
AM4TW-4803SH35Z	18-72	3.3	1200	3500	1000	75
AM4TW-4805SH35Z	18-72	5	800	3500	680	79
AM4TW-4807SH35Z	18-72	7.2	555	3500	680	81
AM4TW-4809SH35Z	18-72	9	444	3500	220	80
AM4TW-4812SH35Z	18-72	12	333	3500	220	82
AM4TW-4815SH35Z	18-72	15	266	3500	68	82
AM4TW-4818SH35Z	18-72	18	222	3500	47	80
AM4TW-4824SH35Z	18-72	24	166	3500	47	80

Models
Dual output

Model	Input Voltage (V)	Output Voltage (V)	Output Current max (mA)	Isolation (VDC)	Max Capacitive Load (uF)	Efficiency (%)
AM4TW-2403DZ	9-36	±3.3	±606	1500	±470	75
AM4TW-2405DZ	9-36	±5	±400	1500	±330	79
AM4TW-2407DZ	9-36	±7.2	±277	1500	±47	79
AM4TW-2409DZ	9-36	±9	±222	1500	±47	81
AM4TW-2412DZ	9-36	±12	±166	1500	±47	82
AM4TW-2415DZ	9-36	±15	±133	1500	±22	81
AM4TW-2418DZ	9-36	±18	±111	1500	±10	79
AM4TW-2424DZ	9-36	±24	±83	1500	±10	79

Models

Dual output (continued)

Model	Input Voltage (V)	Output Voltage (V)	Output Current max (mA)	Isolation (VDC)	Max Capacitive Load (uF)	Efficiency (%)
AM4TW-4803DZ	18-72	±3.3	±606	1500	±680	77
AM4TW-4805DZ	18-72	±5	±400	1500	±330	79
AM4TW-4807DZ	18-72	±7.2	±277	1500	±47	78
AM4TW-4809DZ	18-72	±9	±222	1500	±47	80
AM4TW-4812DZ	18-72	±12	±166	1500	±47	81
AM4TW-4815DZ	18-72	±15	±133	1500	±33	82
AM4TW-4818DZ	18-72	±18	±111	1500	±22	80
AM4TW-4824DZ	18-72	±24	±83	1500	±22	80
AM4TW-2403DH35Z	9-36	±3.3	±606	3500	±470	75
AM4TW-2405DH35Z	9-36	±5	±400	3500	±330	79
AM4TW-2407DH35Z	9-36	±7.2	±277	3500	±47	79
AM4TW-2409DH35Z	9-36	±9	±222	3500	±47	81
AM4TW-2412DH35Z	9-36	±12	±166	3500	±47	82
AM4TW-2415DH35Z	9-36	±15	±133	3500	±22	81
AM4TW-2418DH35Z	9-36	±18	±111	3500	±10	79
AM4TW-2424DH35Z	9-36	±24	±83	3500	±10	79
AM4TW-4803DH35Z	18-72	±3.3	±606	3500	±680	77
AM4TW-4805DH35Z	18-72	±5	±400	3500	±330	79
AM4TW-4807DH35Z	18-72	±7.2	±277	3500	±47	78
AM4TW-4809DH35Z	18-72	±9	±222	3500	±47	80
AM4TW-4812DH35Z	18-72	±12	±166	3500	±47	81
AM4TW-4815DH35Z	18-72	±15	±133	3500	±66	82
AM4TW-4818DH35Z	18-72	±18	±111	3500	±22	80
AM4TW-4824DH35Z	18-72	±24	±83	3500	±22	80

Input Specifications

Parameters	Nominal	Typical	Maximum	Units
Voltage range	24 48	9-36 18-72		VDC
Filter	π (Pi) Network			
Input Reflected Ripple Current *		35		mA p-p
Absolute maximum rating	24 Vin 48 Vin	-0.7 - 40 -0.7 - 80		VDC
Peak input voltage time		100		ms

* The input reflected ripple current should be measured with a 12µH inductor and a 47µF input capacitor (ESR<1Ω at 100 KHz)

Isolation Specifications

Parameters	Conditions	Typical	Rated	Units
Tested I/O voltage	60 sec		1500 or 3500	VDC
Tested Case/I, O voltage			1000	VDC
Resistance		> 1000		MOhm
Capacitance		470		pF

Output Specifications

Parameters	Conditions	Typical	Maximum	Units
Voltage accuracy		±1		%
Short Circuit protection	Continuous			
Short circuit restart	Auto-recovery			
Line voltage regulation		±0.5		%
Load voltage regulation	0-100% load, 3.3/±3.3V output 0-100% load, others	±1.5 ±0.5		%
Temperature coefficient		±0.02		%/°C
Ripple & Noise *	At 20 MHz Bandwidth	60		mV p-p

* Measured with a 1µF CC.

General Specifications

Parameters	Conditions	Typical	Maximum	Units
Switching frequency	100% load	266		KHz
Operating temperature	Without derating	-40 to +85		°C
Storage temperature		-40 to +125		°C
Max Case temperature			100	°C
Cooling	Free air convection			
Humidity			95	%
Case material	Nickel-coated copper			
Weight		17		g
Dimensions(L x W x H)	Tolerance ±0.5 mm or ±0.02 inches	1.25 x 0.8 x 0.4inches (31.75 x 20.32 x 10.16mm)		
MTBF	>1 121 000 hrs (MIL-HDBK -217F, Ground Benign, t=+25°C)			
Maximum soldering temp.	1.5mm from case for 10 second		260	°C

NOTE: All specifications in this datasheet are measured at an ambient temperature of 25°C, humidity<75%, nominal input voltage and at rated output load unless otherwise specified

Safety Specifications

Parameters	
Agency Approval	CE
Standards	EN55022 Class A with the recommended circuit
	IEC61000-4-2, Perf. Criteria A
	IEC61000-4-3, Perf. Criteria A
	IEC61000-4-4, Perf. Criteria A (external 220uF/100V cap required)
	IEC61000-4-5, Perf. Criteria A (external 220uF/100V cap required)
	IEC61000-4-6, Perf. Criteria A
	IEC61000-4-8, Perf. Criteria A
	NOTE: Also designed to meet IEC/EN/UL60950-1, 62368-1

Pin Out Specifications

Pin	1500VDC		3500VDC	
	Single	Dual	Single	Dual
1	+V Input	+V Input	No Pin	No Pin
2	N.C.	-V Output	-V Input	-V Input
3	N.C.	Common	-V Input	-V Input
9	No Pin	No Pin	No Pin	Common
10	-V Output	Common	No Pin	No Pin
11	+V Output	+V Output	N.C.	-V Output
12/13	-V Input	-V Input	No Pin	No Pin
14	+V Output	+V Output	+V Output	+V Output
15	-V Output	Common	No Pin	No Pin
16	No Pin	No Pin	-V Output	Common
22	N.C.	Common	+V Input	+V Input
23	N.C.	-V Output	+V Input	+V Input
24	+V Input	+V Input	No Pin	No Pin

Dimensions

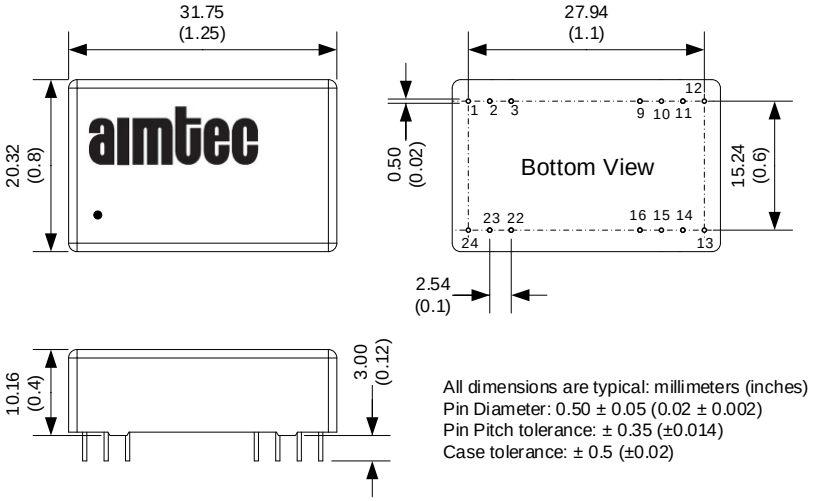

All dimensions are typical: millimeters (inches)
Pin Diameter: 0.50 ± 0.05 (0.02 ± 0.002)
Pin Pitch tolerance: ± 0.35 (±0.014)
Case tolerance: ± 0.5 (±0.02)

Recommended Circuits

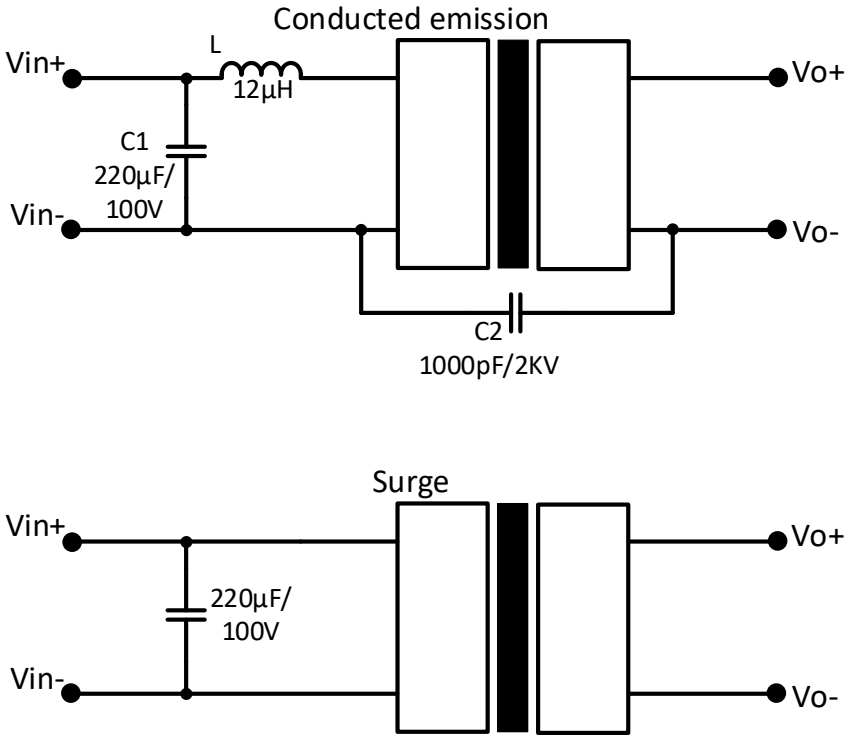

NOTE: 1. Datasheets are updated as needed and as such, specifications are subject to change without notice. Once printed or downloaded, datasheets are no longer controlled by Aimtec; refer to www.aimtec.com for the most current product specifications. **2.** Product labels shown, including safety agency certifications on labels, may vary based on the date manufactured. **3.** Mechanical drawings and specifications are for reference only. **4.** All specifications are measured at an ambient temperature of 25°C, humidity<75%, nominal input voltage and at rated output load unless otherwise specified. **5.** Aimtec may not have conducted destructive testing or chemical analysis on all internal components and chemicals at the time of publishing this document. CAS numbers and other limited information are considered proprietary and may not be available for release. **6.** This

product is not designed for use in critical life support systems, equipment used in hazardous environments, nuclear control systems or other such applications which necessitate specific safety and regulatory standards other the ones listed in this datasheet. **7.** Warranty is in accordance with Aimtec's standard Terms of Sale available at www.aimtec.com.