Series AM50E-Z

50 Watt | DC-DC Converter



FEATURES:

- Wide 2:1 Input Range
- 1600 VDC Isolation
- Adjustable Output Voltage
- Continuous Short Circuit Protection
- Over Temperature Protection
- Efficiency up to 92%
- Remote On/Off Function
- Over Current, Over Voltage Protection
- Operating Temperature: -40˚C to 85˚C
- Soft start

Models

Single output

Model	Input Voltage (V)	Input Current FL typ. | NL max. (mA)		Output Voltage (V)	Output Current max (A)	Maximum Capacitive load (µF)	Efficiency (%)
AM50E-1203SZ	9-18	3022	120	3.3	10	26000	91
AM50E-1205SZ	9-18	4579	170	5	10	17000	91
AM50E-1212SZ	9-18	4682	50	12	4.167	3300	89
AM50E-1215SZ	9-18	4630	50	15	3.333	2200	90
AM50E-2403SZ	18-36	1494	70	3.3	10	26000	92
AM50E-2405SZ	18-36	2252	90	5	10	17000	92.5
AM50E-2412SZ	18-36	2277	40	12	4.167	3300	91.5
AM50E-2415SZ	18-36	2277	30	15	3.333	2200	91.5
AM50E-4803SZ	36-75	747	50	3.3	10	26000	92
AM50E-4805SZ	36-75	1126	60	5	10	17000	92.5
AM50E-4812SZ	36-75	1145	30	12	4.167	2300	91
AM50E-4815SZ	36-75	1138	40	15	3.333	2200	91.5

Add suffix "-K" for optional heat sink

NOTE: All specifications in this datasheet are measured at an ambient temperature of 25°C, humidity<75%, nominal input voltage and at rated output load unless otherwise specified.

Input Specifications

Parameters	Nominal	Typical	Maximum	Units
Voltage range	12	9-18		VDC
	24	18-36		VDC
	48	36-75		VDC
Filter	π (Pi) Network			
Startup time		50		ms
Absolute Maximum Rating	12		25	VDC
	24		50	VDC
	48		100	VDC
Peak Input Voltage time			100	ms
On/Off control	ON: 3 ~12VDC or open circuit; OFF – 0 ~ 1.2VDC or Short circuit between pin 2 and pin 3 (OFF idle current: 5mA Typical)			
Under voltage lockout	12V ON/OFF	8.6 / 7.9		VDC
	24V ON/OFF	17.8 / 16		VDC
	48V ON/OFF	34 / 29		VDC
Input Reflected Ripple Current *		20		mA p-p
Transient Recovery time	25% load step change	250		µs
Transient Response Deviation	25% load step change		±3	%

* The input reflected ripple current should be measured with a 12µH inductor and a 47µF input capacitor (ESR<1Ω at 100 KHz)

Isolation Specifications

Parameters	Conditions	Typical	Rated	Units
Tested I/O voltage	60 sec		1600	VDC
Case/Input and Output	60 sec		1600	VDC
Resistance		<1000		MOhm
Capacitance		2000		pF

Output Specifications

Parameters	Conditions	Typical	Maximum	Units
Voltage accuracy		±1		%
Over voltage protection	Zener diode clamp			
Over load protection		120~150		% of Iout
Short Circuit protection	Continuous, auto-restart			
Line voltage regulation	HL-LL		±0.5	%
Load voltage regulation	0% to 100% load		±0.5	%
Temperature coefficient		±0.02		%/°C
Ripple & Noise*	20MHz Bandwidth		100	mV p-p
Voltage adjustment range			±10	%

* Measured with a 1µF ceramic capacitor.

General Specifications

Parameters	Conditions	Typical	Maximum	Units
Switching frequency	100% load, 12Vin models	230		KHz
	100% load, 24 & 48Vin models	270		KHz
Operating temperature	See derating chart	-40 to +85		°C
Storage temperature		-40 to +125		°C
Maximum case temperature			110	°C
Over Temperature Protection	Measured on the case	115		°C
Cooling	Free Air Convection (30-65 LFM)			
Humidity			95	% RH
Case material	Copper			
Weight		45		g
Dimensions (L x W x H)	2.00 x 1.00 x 0.45 inches 50.80 x 25.40 x 11.50 mm			
MTBF	>200,000 hrs (MIL-HDBK -217F, Ground Benign, t=+25°C) hours			
Maximum soldering temperature	1.5mm from case for 10 sec		260	°C

Safety Specifications

Parameters	
Agency Approval	CE, cULus
Safety	EN55032, Class A IEC 61000-4-2, Criteria A IEC 61000-4-3, Criteria A IEC 61000-4-4, Criteria A, with external filter IEC 61000-4-5, Criteria A, with external filter IEC 61000-4-6, Criteria A IEC 61000-4-8, Criteria A Designed to meet IEC/EN/UL 60950-1, 62368-1

Pin Out Specifications

Pin	Single
1	+ V Input
2	- V Input
3	On/Off Control
4	+ V Output
5	-V Output
6	Trim

Dimensions

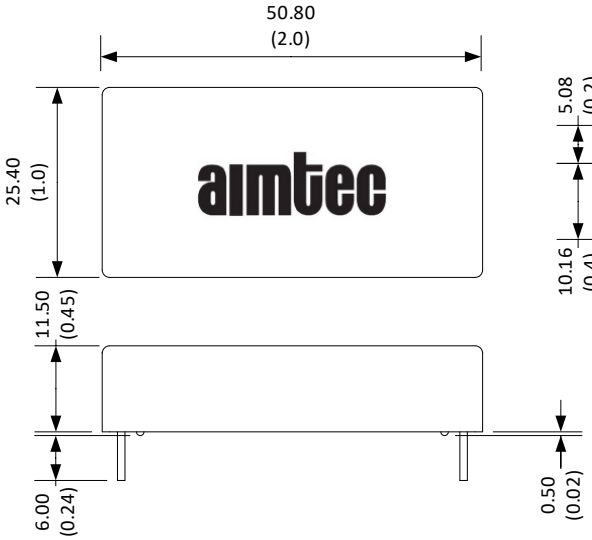

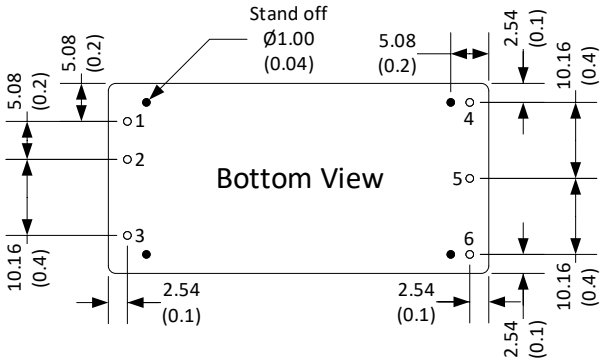

All dimensions are typical: millimeters (inches)
Pin Diameter: 1.0 ± 0.05 (0.04 ± 0.002)
Pin Pitch tolerance: ± 0.35 (±0.014)
Case tolerance: ± 0.5 (±0.02)
Stand off tolerance: ± 0.1 (±0.004)

Dimensions with Optional Heatsink

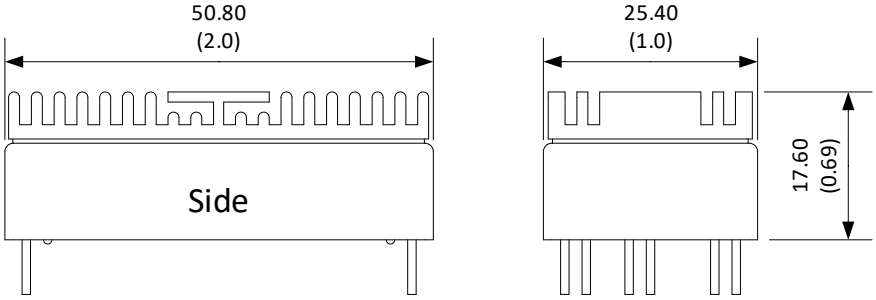

Notes: Add "-K" suffix for ordering, heat sink is affixed with thermally dissipative adhesive tape.
See derating graph for temperature performance. Heat sink material is anodized (black) aluminum, adds weight 11.3g.

Trimming

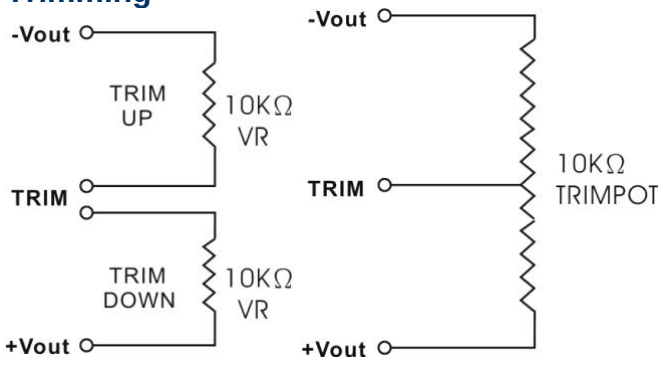

Derating

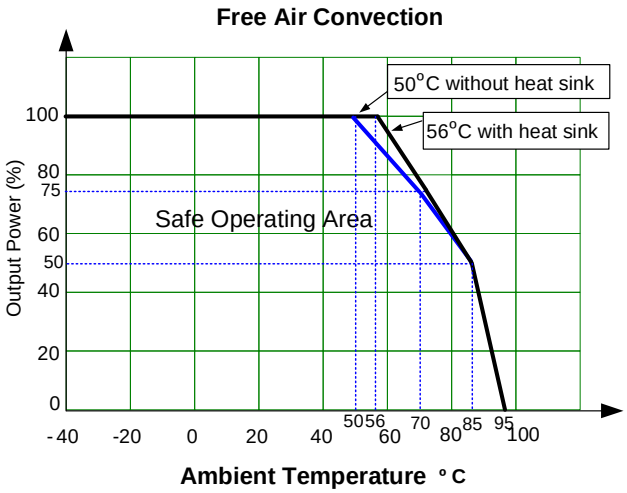

Extended temperature performance can be achieved with optional heat sink. (add suffix "–K" to part number)

Input Reflected Ripple Current Test Step

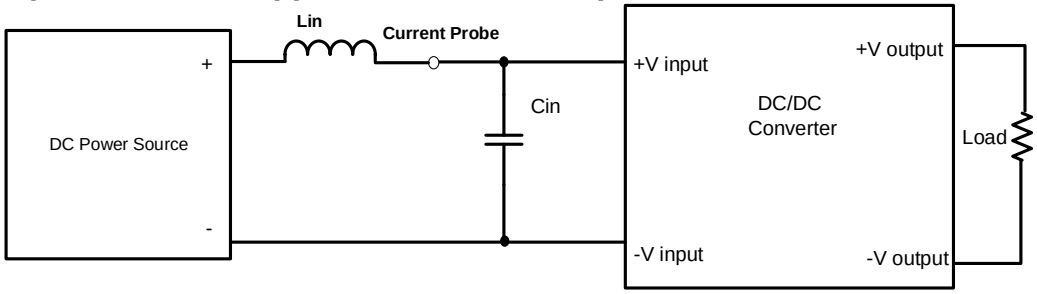

Input reflected ripple current is measured through a source inductor Lin(12uH) and a source capacitor Cin (47uF, ESR<1.0ohm at 100KHz) at a nominal input and full load

Output Ripple and noise reduction

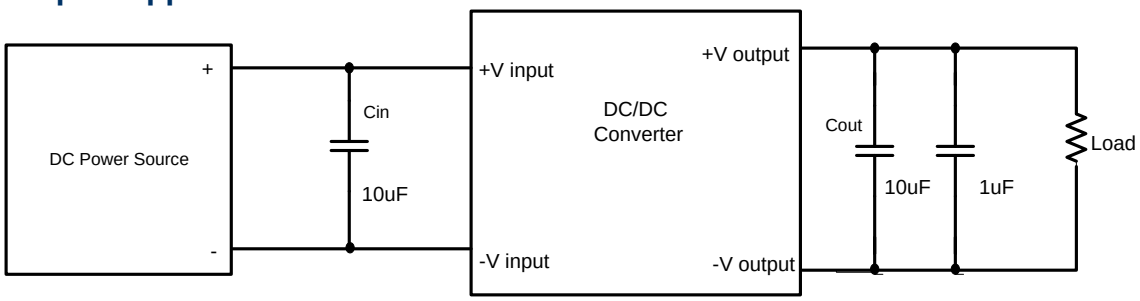

To reduce ripple and noise, it is recommended to use a 1µF ceramic disk capacitor and a 10µF electrolytic

Control ON/OFF pin connection example

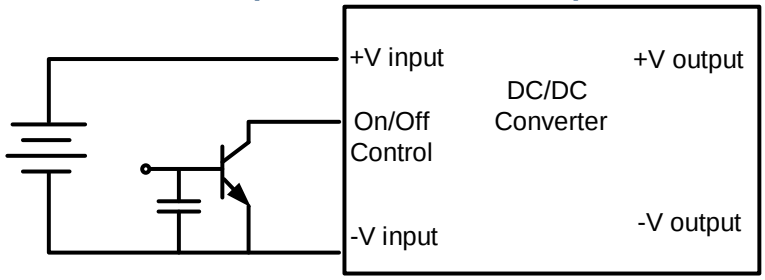

EFT/Surge Circuit recommendation

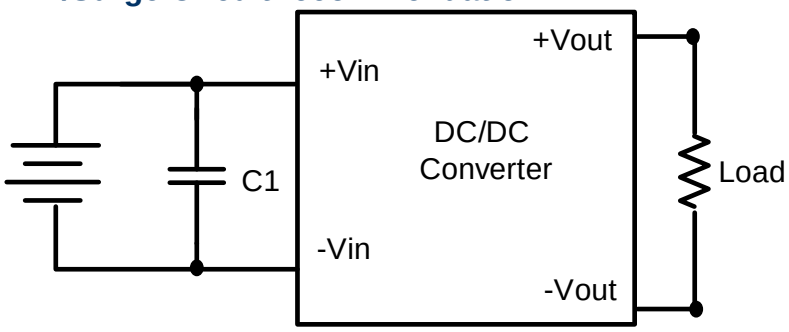

Vin	C1
24V	220 µF / 100V
48V	

NOTE: 1. Datasheets are updated as needed and as such, specifications are subject to change without notice. Once printed or downloaded, datasheets are no longer controlled by Aimtec; refer to www.aimtec.com for the most current product specifications. **2.** Product labels shown, including safety agency certifications on labels, may vary based on the date manufactured. **3.** Mechanical drawings and specifications are for reference only. **4.** All specifications are measured at an ambient temperature of 25°C, humidity<75%, nominal input voltage and at rated output load unless otherwise specified. **5.** Aimtec may not have conducted destructive testing or chemical analysis on all internal components and chemicals at the time of publishing this document. CAS numbers and other limited information are considered proprietary and may not be available for release. **6.** This product is not designed for use in critical life support systems, equipment used in hazardous environments, nuclear control systems or other such applications which necessitate specific safety and regulatory standards other the ones listed in this datasheet. **7.** Warranty is in accordance with Aimtec's standard Terms of Sale available at www.aimtec.com.