Click to ORDER samples

AM50EW-LPZ



2 x 1

The AM50EW-LPZ is a 50W DC/DC converter that offers a regulated output which contributes to a more stable and reliable output performance. It features a wide 4:1 input voltage range of 9-75VDC, which will benefit your new system design.

This series offers great operating temperatures, from -40°C to 85°C. Furthermore, an isolation of 1500VDC, continuous output short circuit protection (OSCP), over-current protection (OCP) and over-voltage protection (OVP) come standard with the series.

The AM50EW-LPZ is suitable for grid power, instrumentation, industrial controls, communication, and civil applications.

Features

- Operating Temp: -40 °C to +85 °C
- Isolation voltage: 1500VDC
- High efficiency: Up to 91% typ.
- Regulated single output
- Output short circuit, over-current, over-voltage
- Standard 2 x1 package

RoHS

3yr Warranty

Summary

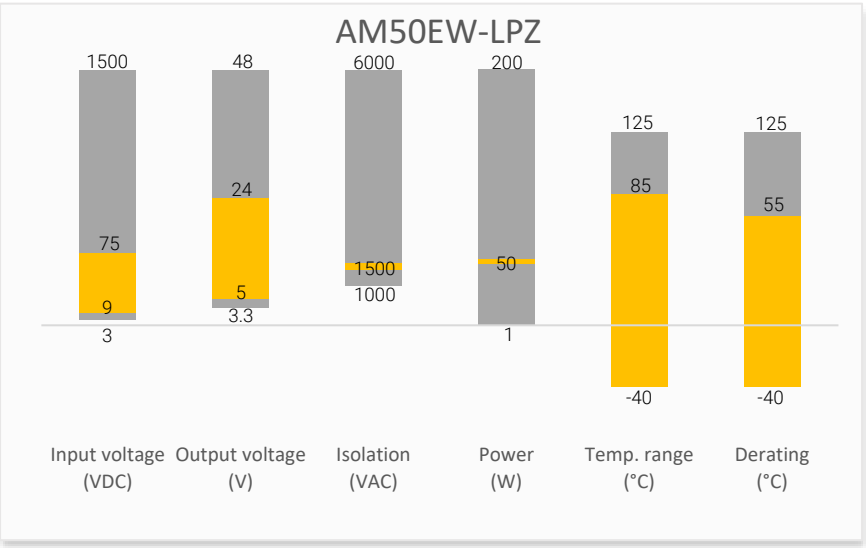

Training

Product Training Video (click to open)

Press Release

Application Notes

Coming Soon!

Applications

Power Grid

Industrial

Telecom

Instrumentation

Models & Specifications

Single Output							
Model	Input Voltage (VDC)	Output Voltage (VDC)	Nominal Vin Input Current Max (mA)		Output Current Max (mA)	Maximum capacitive load (µF)	Efficiency Full Load Typ (%)
			No Load	Full Load			
AM50EW-2405SLPZ	24 (9-36)	5	60	2289	10000	10000	88
AM50EW-2412SLPZ	24 (9-36)	12	12	2289	4167	2700	90
AM50EW-2415SLPZ	24 (9-36)	15	12	2289	3333	1680	91
AM50EW-2424SLPZ	24 (9-36)	24	12	2289	2087	680	91
AM50EW-4805SLPZ	48 (18-75)	5	60	1144	10000	10000	88
AM50EW-4812SLPZ	48 (18-75)	12	12	1144	4167	2700	90
AM50EW-4815SLPZ	48 (18-75)	15	12	1144	3333	1680	91
AM50EW-4824SLPZ	48 (18-75)	24	12	1144	2087	680	91

Input Specification

Parameters	Conditions	Typical	Maximum	Units
Voltage types			4:1	
Absolute maximum rating	24Vin, 1sec. max.		-0.7~50	VDC
	48Vin, 1sec. max.		-0.7~100	VDC
Input reflected ripple current	Nominal Vin and full load	30		mA
Start-up time	Nominal Vin and constant resistive load, Power up	10		mS
Start-up voltage	24V input	9		VDC
	48V input	18		VDC
Filter	π(Pi) Network			
On/Off control	ON – open or 3.5-12VDC; OFF – short to –Vin or 0-1.2VDC, Idle current: 5 - 10mA			

Isolation Specification

Parameters	Conditions	Typical	Maximum	Units
Tested isolation voltage	Input / output, 60 sec, 1 mA	≥1500		VDC
Resistance	Input / output, 500VDC	≥1000		MΩ
Capacitance	Input / output, 100KHz/0.1V	2000		pF

Output Specification

Parameters	Conditions	Typical	Maximum	Units
Voltage Tolerance	5%~100% load	±1	±3	%
	0%~100% load	±1	±5	%
Line Regulation	LL to HL at Full Load	±0.2	±0.5	%
Load Regulation	5% to 100% load	±0.5	±1	%
Transient Recovery Time	25% load step change	250	500	µs
Transient recovery deviation	25% load step change, 5Vout models	±5	±8	%
	25% load step change, others	±3	±5	%
External Trim Adj. Range			±10	%
Ripple & Noise	20MHz Bandwidth, 100% load	75	150	mV pk-pk

General Specifications					
Parameters	**Conditions**	**Minimum**	**Typical**	**Maximum**	**Units**
Switching frequency	100% load		300		KHz
Short circuit protection	Continuous, Auto recovery				
Over current protection	Nominal input	110			% of Io
Over voltage protection		110			%
Operating temperature	See derating curve	-40		85	°C
Maximum soldering temperature	1.5mm from case for 10 sec			300	°C
Storage temperature		-55		125	°C
Temperature coefficient	100% Load			± 0.03	%/ °C
Cooling	Free air convection				
Humidity			≥5	95	% RH
Weight			40		g
Dimensions (L x W x H)		2.00x 1.00 x 0.47 inches (50.8 x 25.4 x 12.0 mm)			
Case material	Aluminum alloy				
MTBF	≥ 1 000 000 hrs (MIL-HDBK -217F, t=+25°C)				
NOTE: All specifications in this datasheet are measured at an ambient temperature of 25°C, humidity<75%, nominal input voltage and at rated output load unless otherwise specified.					

Safety Specifications		
Parameters		
Standards	Designed to meet	UL/EN/IEC 62368-1
	EMI - Conducted and radiated emission	CISPR32/EN 55032, Class B with EMC recommended circuit
	Electrostatic Discharge Immunity	EN61000-4-2
	RF, Electromagnetic Field Immunity	EN61000-4-3
	Electrical Fast Transient/Burst Immunity	EN61000-4-4
	Surge Immunity	EN61000-4-5
	RF, Electromagnetic Field Immunity	EN61000-4-6

Derating

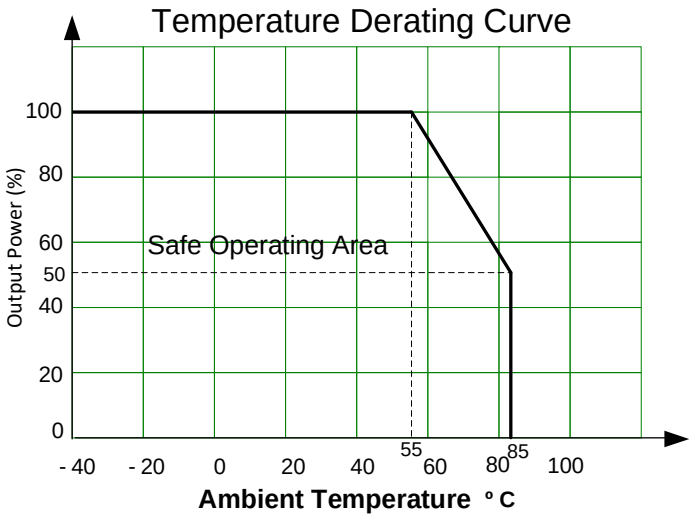

Typical Application Circuit

Single

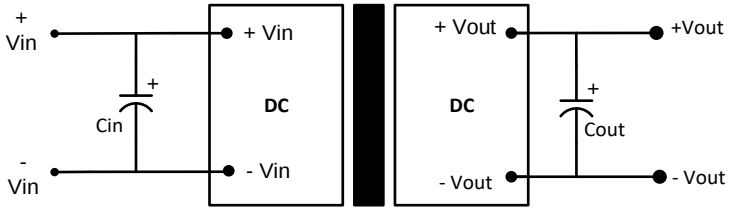

Single outputs			
Vin	Cin	Vout	Cout
24VDC	100μF/50V	3.3VDC	100μF,50V
48VDC	100μF/100V	5VDC	
		9VDC	
		12VDC	
		15VDC	
		24VDC	

Recommended EMC Circuit

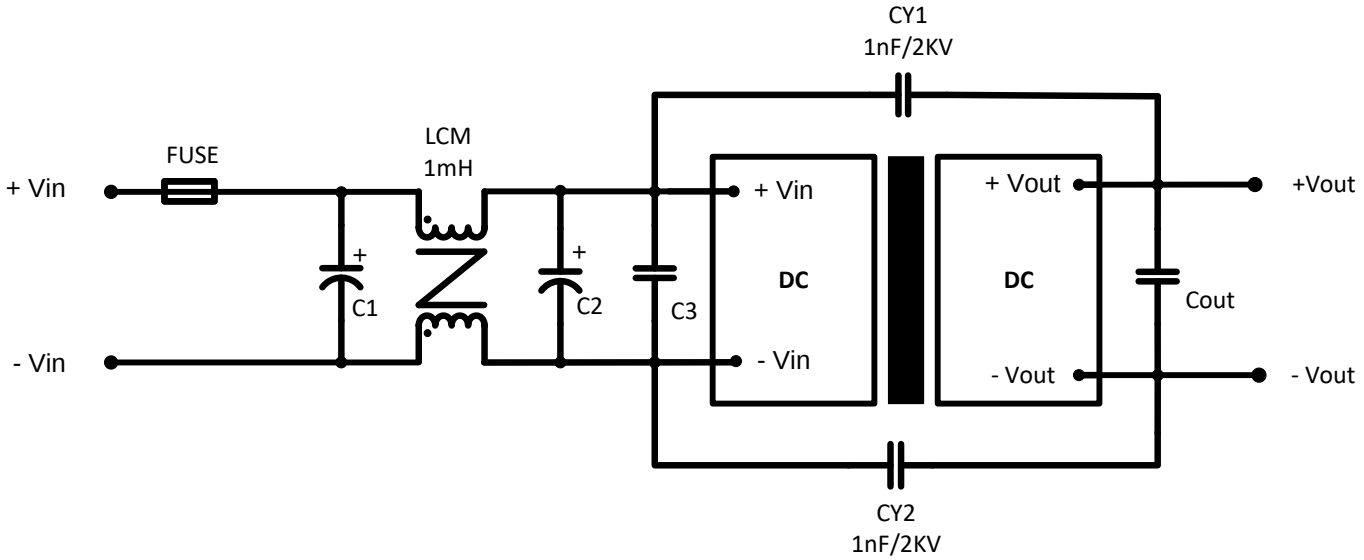

Component	24Vin	48Vin
C1	680μF, 50V	330μF, 100V
C2	330μF, 50V	330μF, 100V
C3	4.7μF, 50V	2.2μF, 100V
Cout	Refer to Cout in Typical Application Circuit	

Trimming

Output voltage can be externally trimmed by utilizing the methods as shown below

Fixed Resistor **Variable Potentiometer**

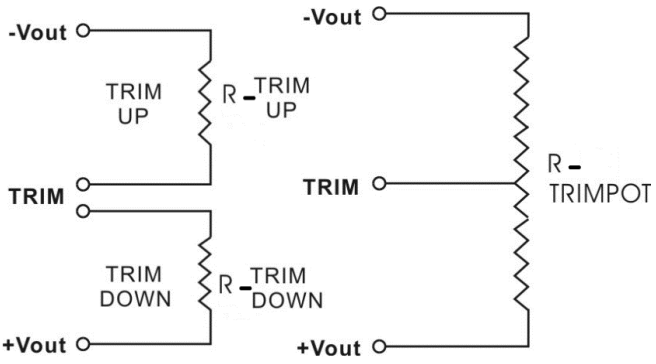

Leave open if not used.

5V Output

Trim down %	1	2	3	4	5	6	7	8	9	10
Vout (VDC)	4.950	4.900	4.850	4.800	4.750	4.700	4.680	4.600	4.550	4.500
Rt down (KΩ)	37.913	21.480	12.723	7.281	3.572	0.881	0.001	--	--	--
Trim up %	1	2	3	4	5	6	7	8	9	10
Vout (VDC)	5.060	5.100	5.150	5.200	5.250	5.300	5.350	5.400	5.450	5.500
Rt up (KΩ)	-1476.120	153.523	56.231	30.531	18.656	11.815	7.367	4.243	1.928	0.145

12V Output

Trim down %	1	2	3	4	5	6	7	8	9	10
Vout (VDC)	11.880	11.760	11.640	11.520	11.400	11.280	11.160	11.040	10.920	10.800
Rt down (KΩ)	479.255	258.883	172.448	126.302	97.600	78.024	63.817	53.038	44.579	37.765
Trim up %	1	2	3	4	5	6	7	8	9	10
Vout (VDC)	12.120	12.240	12.360	12.480	12.600	12.720	12.840	12.960	13.080	13.200
Rt up (KΩ)	223.497	82.593	45.704	28.705	18.926	12.572	8.112	4.809	2.265	0.245

15V Output

Trim down %	1	2	3	4	5	6	7	8	9	10
Vout (VDC)	14.850	14.700	14.550	14.400	14.250	14.100	13.950	13.800	13.650	13.500
Rt down (KΩ)	711.551	394.533	266.855	197.897	154.724	125.152	103.628	87.261	74.395	64.015
Trim up %	1	2	3	4	5	6	7	8	9	10
Vout (VDC)	15.150	15.300	15.450	15.600	15.750	15.900	16.050	16.200	16.350	16.470
Rt up (KΩ)	286.046	100.095	54.414	33.755	21.979	14.370	9.049	5.119	2.098	0.141

24V Output

Trim down %	1	2	3	4	5	6	7	8	9	10
Vout (VDC)	23.760	23.520	23.280	23.040	22.800	22.560	22.320	22.080	21.840	21.600
Rt down (KΩ)	718.061	384.608	258.557	192.310	151.466	123.765	103.742	88.594	76.733	67.194
Trim up %	1	2	3	4	5	6	7	8	9	10
Vout (VDC)	24.240	24.480	24.720	24.960	25.200	25.440	25.680	25.920	26.160	26.370
Rt up (KΩ)	122.074	47.664	26.700	16.815	11.062	7.298	4.644	2.671	1.148	0.074

Dimensions

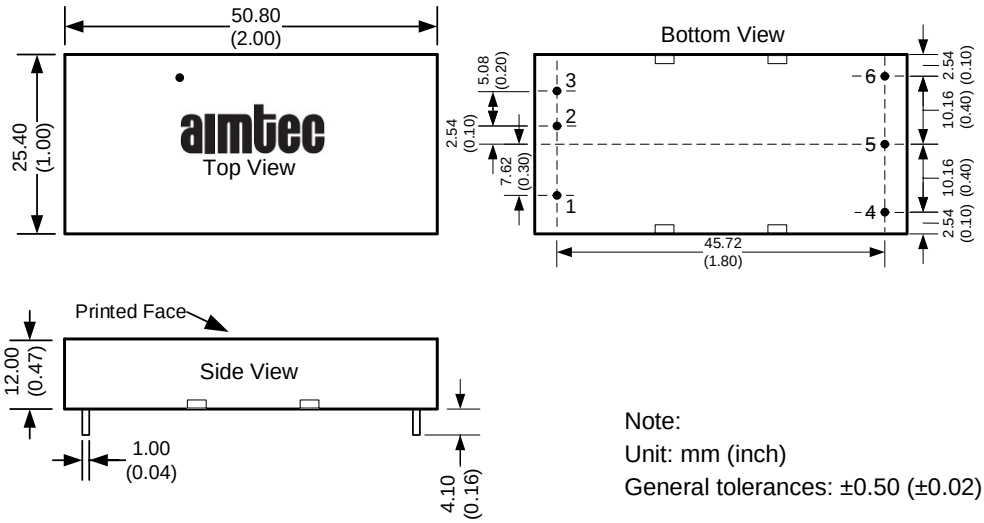

Pin Out Specifications	
Pin	Single
1	On/off control
2	-Vin
3	+Vin
4	Trim
5	-Vout
6	+Vout

Note:
Unit: mm (inch)
General tolerances: ±0.50 (±0.02)

NOTE: 1. Datasheets are updated as needed and as such, specifications are subject to change without notice. Once printed or downloaded, datasheets are no longer controlled by Aimtec; refer to www.aimtec.com for the most current product specifications. **2.** Product labels shown, including safety agency certifications on labels, may vary based on the date manufactured. **3.** Mechanical drawings and specifications are for reference only. **4.** All specifications are measured at an ambient temperature of 25°C, humidity<75%, nominal input voltage and at rated output load unless otherwise specified. **5.** Aimtec may not have conducted destructive testing or chemical analysis on all internal components and chemicals at the time of publishing this document. CAS numbers and other limited information are considered proprietary and may not be available for release. **6.** This product is not designed for use in critical life support systems, equipment used in hazardous environments, nuclear control systems or other such applications which necessitate specific safety and regulatory standards other the ones listed in this datasheet. **7.** Warranty is in accordance with Aimtec's standard Terms of Sale available at www.aimtec.com.