aimtec
Your Power Partner

Series AM5TW-Z
5 Watt | DC-DC Converter



FEATURES:

- RoHS compliant
- 24 Pin DIP Package
- High efficiency up to 84%
- Wide 4:1 input range
- Operating temperature -40ºC to + 85ºC
- Input / Output isolation 1500 or 3500VDC
- Pin compatible with multiple manufacturers
- Continuous short circuit protection

Models
Single output

Model	Input Voltage (V)	Output Voltage (V)	Output Current max (mA)	Isolation (VDC)	Max Capacitive Load (uF)	Efficiency (%)
AM5TW-2403SZ	9-36	3.3	1300	1500	1000	75
AM5TW-2405SZ	9-36	5	1000	1500	1000	79
AM5TW-2407SZ	9-36	7.2	694	1500	470	82
AM5TW-2409SZ	9-36	9	555	1500	470	83
AM5TW-2412SZ	9-36	12	416	1500	220	82
AM5TW-2415SZ	9-36	15	333	1500	68	82
AM5TW-2418SZ	9-36	18	277	1500	68	82
AM5TW-2424SZ	9-36	24	208	1500	68	82
AM5TW-4803SZ	18-72	3.3	1300	1500	1000	75
AM5TW-4805SZ	18-72	5	1000	1500	1000	80
AM5TW-4807SZ	18-72	7.2	694	1500	1000	82
AM5TW-4809SZ	18-72	9	555	1500	330	81
AM5TW-4812SZ	18-72	12	416	1500	330	83
AM5TW-4815SZ	18-72	15	333	1500	330	83
AM5TW-4818SZ	18-72	18	277	1500	47	81
AM5TW-4824SZ	18-72	24	208	1500	47	81
AM5TW-2403SH35Z	9-36	3.3	1300	3500	1000	75
AM5TW-2405SH35Z	9-36	5	1000	3500	1000	79
AM5TW-2407SH35Z	9-36	7.2	694	3500	470	82
AM5TW-2409SH35Z	9-36	9	555	3500	470	83
AM5TW-2412SH35Z	9-36	12	416	3500	220	82
AM5TW-2415SH35Z	9-36	15	333	3500	68	82
AM5TW-2418SH35Z	9-36	18	277	3500	68	82
AM5TW-2424SH35Z	9-36	24	208	3500	68	82
AM5TW-4803SH35Z	18-72	3.3	1300	3500	1000	75
AM5TW-4805SH35Z	18-72	5	1000	3500	1000	80
AM5TW-4807SH35Z	18-72	7.2	694	3500	1000	82
AM5TW-4809SH35Z	18-72	9	555	3500	330	81
AM5TW-4812SH35Z	18-72	12	416	3500	330	83
AM5TW-4815SH35Z	18-72	15	333	3500	330	83
AM5TW-4818SH35Z	18-72	18	277	3500	47	81
AM5TW-4824SH35Z	18-72	24	208	3500	47	81

Models
Dual output

Model	Input Voltage (V)	Output Voltage (V)	Output Current max (mA)	Isolation (VDC)	Max Capacitive Load (uF)	Efficiency (%)
AM5TW-2403DZ	9-36	±3.3	±757	1500	±100	74
AM5TW-2405DZ	9-36	±5	±500	1500	±100	80
AM5TW-2407DZ	9-36	±7.2	±347	1500	±100	81
AM5TW-2409DZ	9-36	±9	±277	1500	±100	81
AM5TW-2412DZ	9-36	±12	±208	1500	±68	83
AM5TW-2415DZ	9-36	±15	±166	1500	±22	80
AM5TW-2418DZ	9-36	±18	±138	1500	±22	79
AM5TW-2424DZ	9-36	±24	±104	1500	±22	79

Models

Dual output (continued)

Model	Input Voltage (V)	Output Voltage (V)	Output Current max (mA)	Isolation (VDC)	Max Capacitive Load (uF)	Efficiency (%)
AM5TW-4803DZ	18-72	±3.3	±757	1500	±680	78
AM5TW-4805DZ	18-72	±5	±500	1500	±330	80
AM5TW-4807DZ	18-72	±7.2	±347	1500	±100	80
AM5TW-4809DZ	18-72	±9	±277	1500	±100	82
AM5TW-4812DZ	18-72	±12	±208	1500	±100	82
AM5TW-4815DZ	18-72	±15	±166	1500	±47	80
AM5TW-4818DZ	18-72	±18	±138	1500	±22	79
AM5TW-4824DZ	18-72	±24	±104	1500	±22	79
AM5TW-2403DH35Z	9-36	±3.3	±757	3500	±100	74
AM5TW-2405DH35Z	9-36	±5	±500	3500	±100	80
AM5TW-2407DH35Z	9-36	±7.2	±347	3500	±100	81
AM5TW-2409DH35Z	9-36	±9	±277	3500	±100	81
AM5TW-2412DH35Z	9-36	±12	±208	3500	±68	83
AM5TW-2415DH35Z	9-36	±15	±166	3500	±22	80
AM5TW-2418DH35Z	9-36	±18	±138	3500	±22	79
AM5TW-2424DH35Z	9-36	±24	±104	3500	±22	79
AM5TW-4803DH35Z	18-72	±3.3	±757	3500	±680	78
AM5TW-4805DH35Z	18-72	±5	±500	3500	±330	80
AM5TW-4807DH35Z	18-72	±7.2	±347	3500	±100	80
AM5TW-4809DH35Z	18-72	±9	±277	3500	±100	82
AM5TW-4812DH35Z	18-72	±12	±208	3500	±100	82
AM5TW-4815DH35Z	18-72	±15	±166	3500	±47	80
AM5TW-4818DH35Z	18-72	±18	±138	3500	±22	79
AM5TW-4824DH35Z	18-72	±24	±104	3500	±22	79

Input Specifications

Parameters	Nominal	Typical	Maximum	Units
Voltage range	24 48	9-36 18-72		VDC
Filter	π (Pi) Network			
Input Reflected Ripple Current *		35		mA p-p
Absolute Maximum Rating	24 Vin 48 Vin	-0.7-40 -0.7-80		VDC
Peak Input Voltage time			100	ms

* The input reflected ripple current should be measured with a 12µH inductor and a 47µF input capacitor (ESR<1Ω at 100 KHz)

Isolation Specifications

Parameters	Conditions	Typical	Rated	Units
Tested I/O voltage	60 sec		1500 or 3500	VDC
Tested Case/I, O voltage	60 sec		1000	VDC
Resistance		> 1000		MOhm
Capacitance		470		pF

Output Specifications

Parameters	Conditions	Typical	Maximum	Units
Voltage accuracy		±1		%
Short Circuit protection	Continuous			
Short circuit restart	Auto recovery			
Line voltage regulation		±0.5		%
Load voltage regulation	0-100% load, 3.3/±3.3V output 0-100% load, others	±1.5 ±0.5		%

Output Specifications (continued)

Parameters	Conditions	Typical	Maximum	Units
Temperature coefficient		±0.02		%/°C
Ripple & Noise	At 20MHz Bandwidth	60		mV p-p
Minimum Load Current		0		% of Max

* Measured with a 1µF CC.

General Specifications

Parameters	Conditions	Typical	Maximum	Units
Switching frequency	100% load	266		KHz
Operating temperature	Full Load without Derating	-40 to +85		°C
Storage temperature		-40 to +125		°C
Max Case temperature			100	°C
Derating	Non-Required			
Cooling	Free air convection			
Humidity			95	%
Case material	Nickel coated copper			
Weight		17		g
Dimensions(L x W x H)	Tolerance ±0.5 mm or ±0.02 inches	1.25 x 0.80 x 0.40 inches (31.75 x 20.32 x 10.16 mm)		
MTBF	>1 121 000 hrs (MIL-HDBK -217F, Ground Benign, t=+25°C)			
Maximum soldering temp.	1.5mm from case for 10 second		260	°C

NOTE: All specifications noted in this datasheet are measured at an ambient temperature of 25°C, humidity<75%, nominal input voltage and at rated output load unless otherwise specified.

Safety Specifications

Parameters	
Agency Approval	CE
Standards	EN55022 Class A with the recommended circuit
	IEC61000-4-2, Perf. Criteria A
	IEC61000-4-3, Perf. Criteria A
	IEC61000-4-4, Perf. Criteria A
	IEC61000-4-5, Perf. Criteria A (external 220uF/100V cap required)
	IEC61000-4-6, Perf. Criteria A
	IEC61000-4-8, Perf. Criteria A
	NOTE: Also designed to meet IEC/EN/UL60950-1, 62368-1

Pin Out Specifications

Pin	1500VDC		3500VDC	
	Single	Dual	Single	Dual
1	+V Input	+V Input	Omitted	Omitted
2	N. C.	-V Output	-V Input	-V Input
3	N. C.	Common	-V Input	-V Input
9	Omitted	Omitted	Omitted	Common
10	-V Output	Common	Omitted	Omitted
11	+V Output	+V Output	N.C.	-V Output
12/13	-V Input	-V Input	Omitted	Omitted
14	+V Output	+V Output	+V Output	+V Output
15	-V Output	Common	Omitted	Omitted
16	Omitted	Omitted	-V Output	Common
22	N. C.	Common	+V Input	+V Input
23	N. C.	-V Output	+V Input	+V Input
24	+V Input	+V Input	Omitted	Omitted

Dimensions

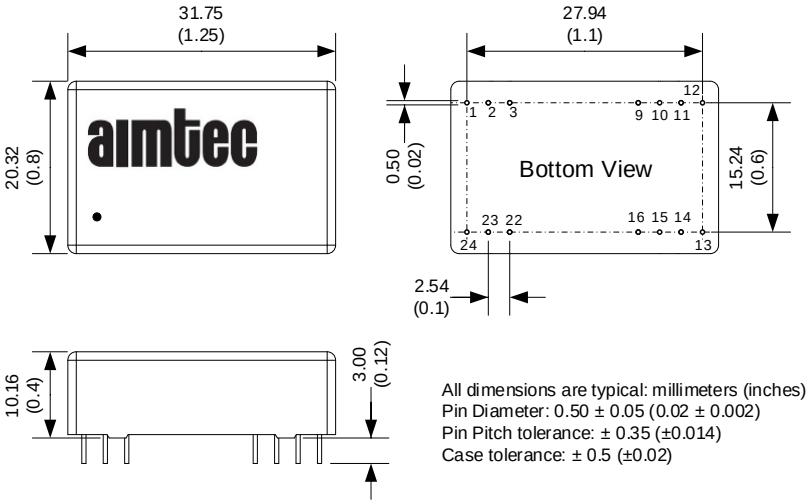

All dimensions are typical: millimeters (inches)
Pin Diameter: 0.50 ± 0.05 (0.02 ± 0.002)
Pin Pitch tolerance: ± 0.35 (±0.014)
Case tolerance: ± 0.5 (±0.02)

Recommended Circuits

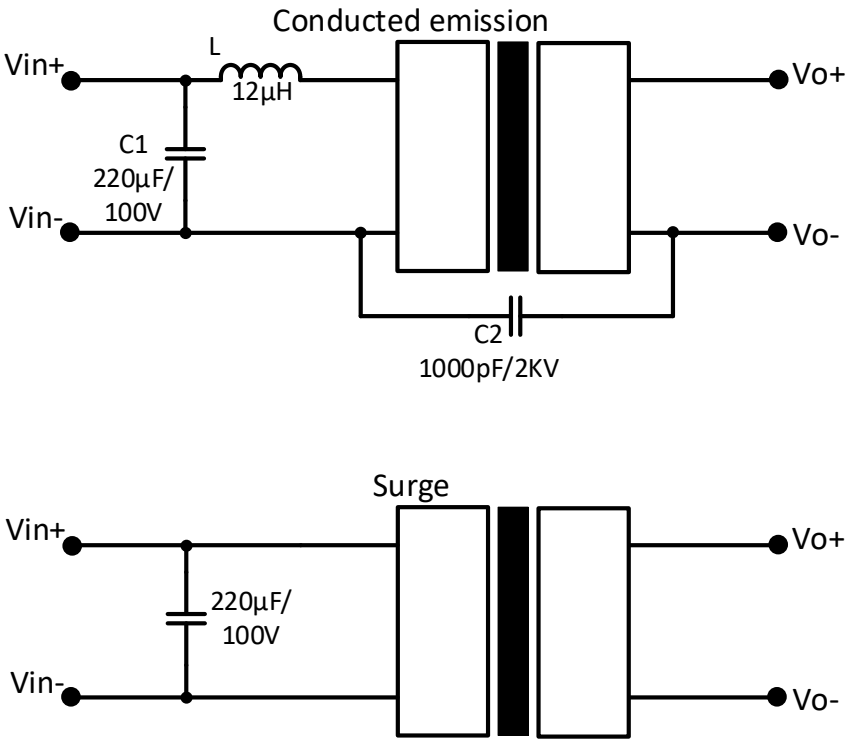

NOTE: 1. Datasheets are updated as needed and as such, specifications are subject to change without notice. Once printed or downloaded, datasheets are no longer controlled by Aimtec; refer to www.aimtec.com for the most current product specifications. **2.** Product labels shown, including safety agency certifications on labels, may vary based on the date manufactured. **3.** Mechanical drawings and specifications are for reference only. **4.** All specifications are measured at an ambient temperature of 25°C, humidity<75%, nominal input voltage and at rated output load unless otherwise specified. **5.** Aimtec may not have conducted destructive testing or chemical analysis on all internal components and chemicals at the time of publishing this document. CAS numbers and other limited information are considered proprietary and may not be available for release. **6.** This product is not designed for use in critical life support systems, equipment used in hazardous environments, nuclear control systems or other such applications which necessitate specific safety and regulatory standards other the ones listed in this datasheet. **7.** Warranty is in accordance with Aimtec's standard Terms of Sale available at www.aimtec.com.