Click to ORDER samples

AM60EW-LPZ



2 x 1

The AM60EW-LPZ is a 60W DC/DC converter that offers a regulated output which contributes to a more stable and reliable output performance. It features a wide 4:1 input voltage range of 9-75VDC, which will benefit your new system design.

This series offers great operating temperatures, from -40°C to 80°C. Furthermore, an isolation of 1500VDC, continuous output short circuit protection (OSCP), over-current protection (OCP), over-voltage protection (OVP), and under voltage lock-out (UVLO) come standard with the series.

The AM60EW-LPZ is suitable for grid power, instrumentation, industrial controls, communication, and civil applications.

Features

- Operating Temp: -40 °C to +80 °C
- Isolation voltage: 1500VDC
- High efficiency: Up to 91% typ.
- Regulated single output
- Output short circuit, over-current, over-voltage
- Standard 2 x1 package

RoHS

3yr Warranty

Summary

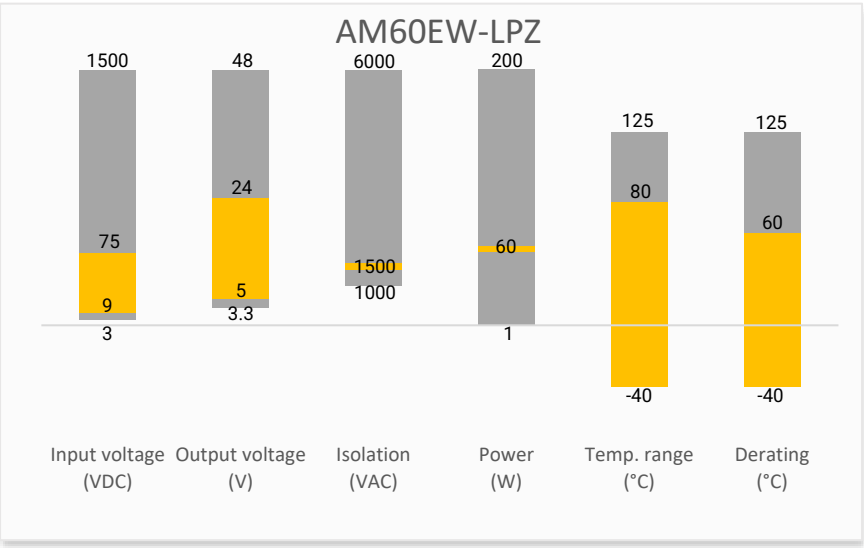

Training

Product Training Video (click to open)

Press Release

Application Notes

Coming Soon!

Applications

Power Grid

Industrial

Telecom

Instrumentation

Models & Specifications

Single Output							
Model	Input Voltage (VDC)	Output Voltage (VDC)	Nominal Vin Input Current Max (mA)		Output Current Max (mA)	Maximum capacitive load (µF)	Efficiency Full Load Typ (%)
			No Load	Full Load			
AM60EW-2405SLPZ	24 (9-36)	5	10	2700	12000	20000	92
AM60EW-2406SLPZ	24 (9-36)	6	10	2700	10000	10000	92
AM60EW-2412SLPZ	24 (9-36)	12	10	2700	5000	5000	93
AM60EW-2415SLPZ	24 (9-36)	15	10	2700	4000	3500	93
AM60EW-2424SLPZ	24 (9-36)	24	10	2700	2500	2000	93
AM60EW-4805SLPZ	48 (18-75)	5	10	1400	12000	20000	92
AM60EW-4806SLPZ	48 (18-75)	6	10	1400	10000	10000	92
AM60EW-4812SLPZ	48 (18-75)	12	10	1400	5000	5000	93
AM60EW-4815SLPZ	48 (18-75)	15	10	1400	4000	3500	93
AM60EW-4824SLPZ	48 (18-75)	24	10	1400	2500	2000	93
AM60EW-4828SLPZ	48 (18-75)	28	10	1400	2143	1500	93

Input Specification

Parameters	Conditions	Typical	Maximum	Units
Voltage types			4:1	
Absolute maximum rating	24Vin, 1sec. max.		-0.7~50	VDC
	48Vin, 1sec. max.		-0.7~100	VDC
Start-up time	Nominal Vin and constant resistive load, Power up	10		mS
Start-up voltage	24V input	9		VDC
	48V input	18		VDC
Input under voltage lockout	24V input	5.5-6.5		VDC
	48V input	12-15.5		VDC
Filter	π(Pi) Network			
On/Off control	ON – open or 3.5-12VDC; OFF – short to –Vin or 0-1.2VDC, Idle current: 5 - 8mA			

Isolation Specification

Parameters	Conditions	Typical	Maximum	Units
Tested isolation voltage	Input / output, 60 sec, 1 mA	≥1500		VDC
Resistance	Input / output, 500VDC	≥1000		MΩ
Capacitance	Input / output, 100KHz/0.1V	2000		pF

Output Specification

Parameters	Conditions	Typical	Maximum	Units
Voltage Tolerance	5%~100% load	±1	±2	%
Line Regulation	LL to HL at Full Load	±0.2	±0.5	%
Load Regulation	5% to 100% load	±0.5	±1	%
Transient Recovery Time	25% load step change	300	500	µs
Transient recovery deviation	25% load step change, 5Vout models	±3	±10	%
	25% load step change, others	±3	±5	%

External Trim Adj. Range			±10	%
Ripple & Noise	20MHz Bandwidth, 100% load	100	150	mV pk-pk

General Specifications

Parameters	Conditions	Minimum	Typical	Maximum	Units
Switching frequency	100% load		310		KHz
Short circuit protection	Continuous, Auto recovery				
Over current protection	Nominal input	110		230	% of Io
Over voltage protection		110		160	%
Operating temperature	See derating curve	-40		80	°C
Maximum soldering temperature	1.5mm from case for 10 sec			300	°C
Storage temperature		-55		125	°C
Temperature coefficient	100% Load			± 0.03	%/ °C
Cooling	Free air convection				
Humidity			≥5	95	% RH
Weight			30		g
Dimensions (L x W x H)		2.00x 1.00 x 0.47 inches (50.8 x 25.4 x 12.0 mm)			
Case material	Aluminum alloy				
MTBF	≥ 1 000 000 hrs (MIL-HDBK -217F, t=+25°C)				

NOTE: All specifications in this datasheet are measured at an ambient temperature of 25°C, humidity<75%, nominal input voltage and at rated output load unless otherwise specified.

Safety Specifications

Parameters		
Standards	Designed to meet	UL/EN/IEC 62368-1
	EMI - Conducted and radiated emission	CISPR32/EN 55032, Class B with EMC recommended circuit
	Electrostatic Discharge Immunity	EN61000-4-2
	RF, Electromagnetic Field Immunity	EN61000-4-3
	Electrical Fast Transient/Burst Immunity	EN61000-4-4
	Surge Immunity	EN61000-4-5
	RF, Electromagnetic Field Immunity	EN61000-4-6
	Vibration	IEC/EN61373, category 1/grade B

Derating

24Vin models

Temperature Derating Graph

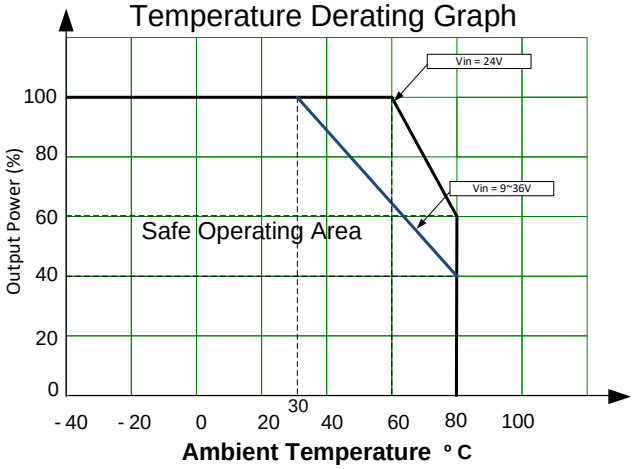

48Vin models

Temperature Derating Graph

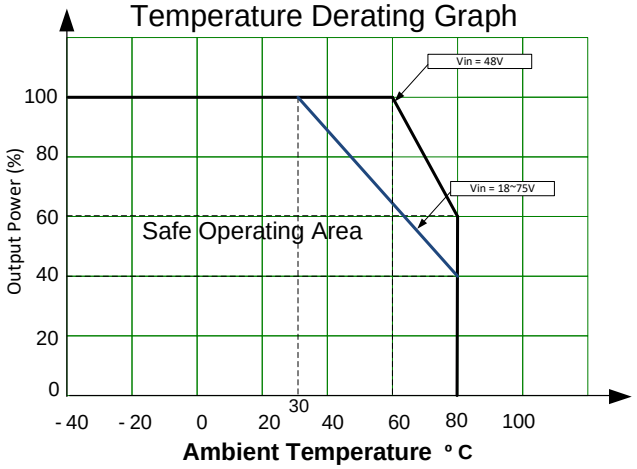

Typical Application Circuit

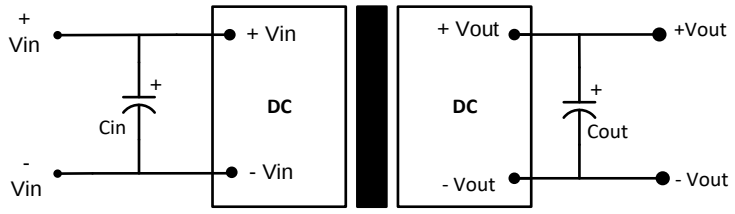

Single outputs			
Vin	Cin	Vout	Cout
24VDC	100µF/50V	5VDC	330µF,24V
48VDC	100µF/100V	6VDC	330µF,24V
		12VDC	150µF,35V
		15VDC	150µF,35V
		24VDC	100µF,50V
		28VDC	100µF,50V

Recommended EMC Circuit

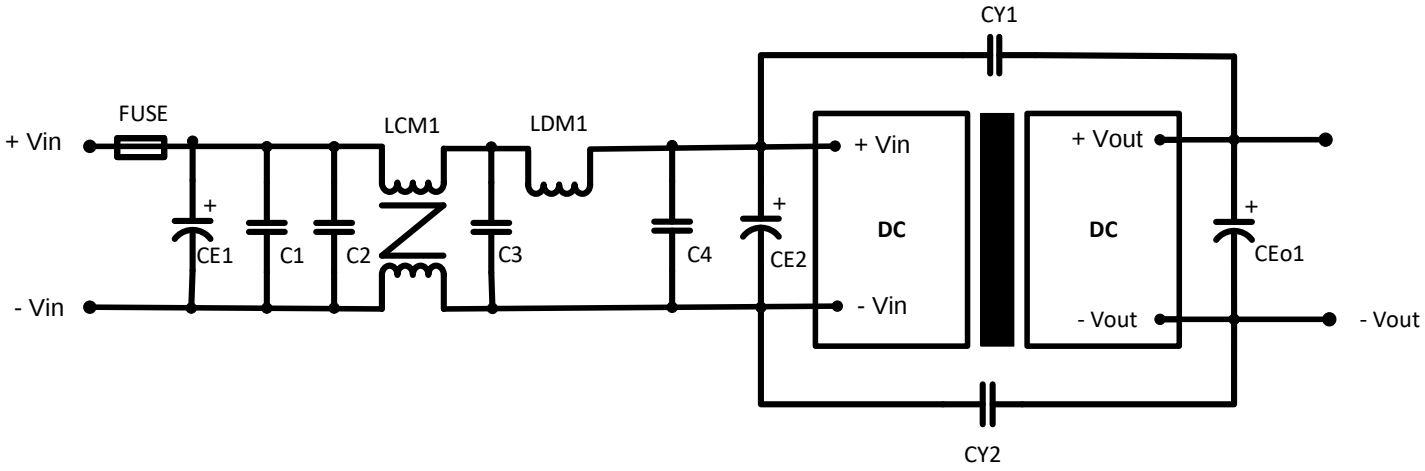

Component	24Vin/48Vin
CE1	1000µF
C1, C2	4.7µF
C3, C4	20µF
CE2	470µF
Ceo1	330µF
CY1,CY2	2.2nF, 3KV
LCM1	10mH
LDM1	2.2µH

Dimensions

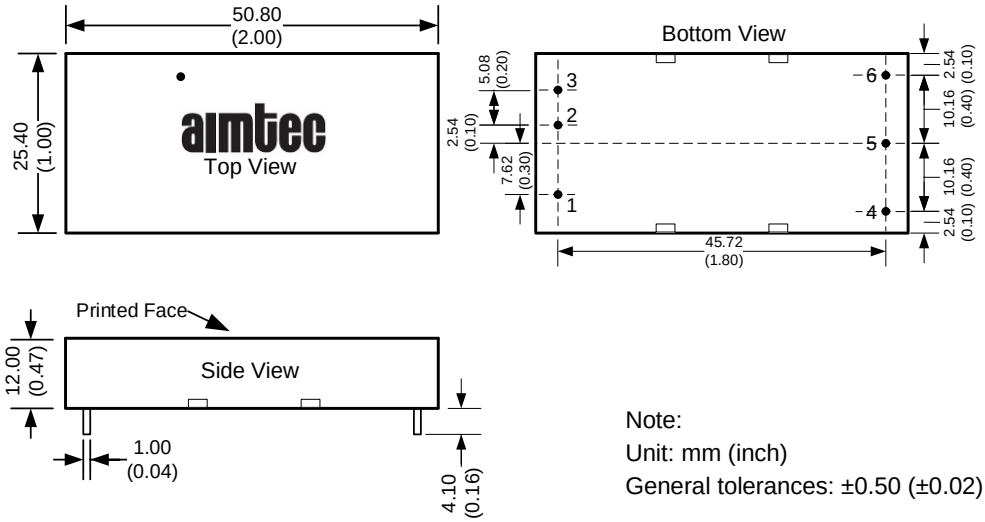

Pin Out Specifications	
Pin	Single
1	On/off control
2	-Vin
3	+Vin
4	Trim
5	-Vout
6	+Vout

Note:
Unit: mm (inch)
General tolerances: ±0.50 (±0.02)

NOTE: 1. Datasheets are updated as needed and as such, specifications are subject to change without notice. Once printed or downloaded, datasheets are no longer controlled by Aimtec; refer to www.aimtec.com for the most current product specifications. **2.** Product labels shown, including safety agency certifications on labels, may vary based on the date manufactured. **3.** Mechanical drawings and specifications are for reference only. **4.** All specifications are measured at an ambient temperature of 25°C, humidity<75%, nominal input voltage and at rated output load unless otherwise specified. **5.** Aimtec may not have conducted destructive testing or chemical analysis on all internal components and chemicals at the time of publishing this document. CAS numbers and other limited information are considered proprietary and may not be available for release. **6.** This product is not designed for use in critical life support systems, equipment used in hazardous environments, nuclear control systems or other such applications which necessitate specific safety and regulatory standards other the ones listed in this datasheet. **7.** Warranty is in accordance with Aimtec's standard Terms of Sale available at www.aimtec.com.