Click to ORDER samples

AM6CW-LPZ



1 x 1

The AM6CW-LPZ is a 6W DC/DC converter that offers a regulated output which contributes to a more stable and reliable output performance. It features a wide 4:1 input voltage range of 9-160VDC, which will benefit your new system design.

This series offers great operating temperatures, from -40°C to 85°C. Furthermore, an isolation of 1500/2250VDC, a high MTBF of 1,000,000h, continuous output short circuit protection (OSCP), over-current protection (OCP), over-voltage protection (OVP), and under voltage lock-out (UVLO) come standard with the series.

The AM6CW-LPZ is suitable for grid power, instrumentation, industrial controls, communication, and civil applications.

Features

- Operating Temp: -40 °C to +85 °C
- Isolation voltage: 1500/2250VDC
- High efficiency: Up to 88% typ.
- Regulated single output
- Output short circuit, over-current, over-voltage, input under voltage protection
- Standard 1 x1 package

RoHS

3yr Warranty

Summary

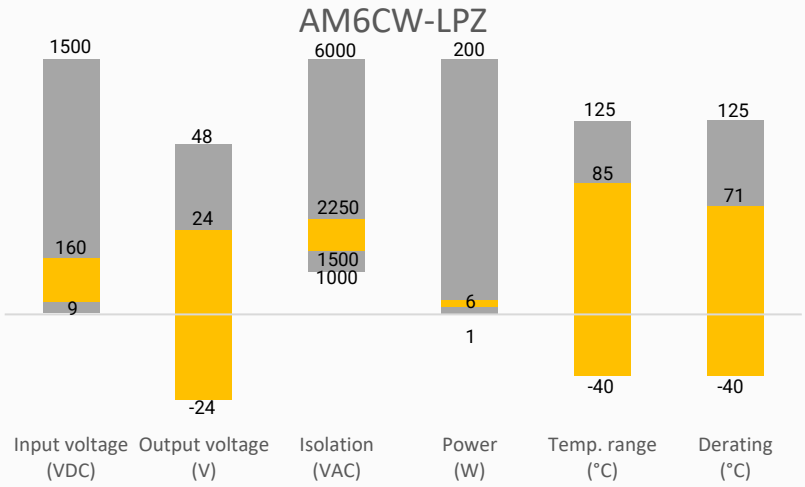

Training

Product Training Video (click to open)

Press Release

Coming Soon!

Application Notes

Applications

Power Grid

Industrial

Telecom

Instrumentation

Models & Specifications

Single Output

Model	Input Voltage (VDC)	Output Voltage (VDC)	Nominal Vin Input Current Typ (mA)		Output Current Max (mA)	Maximum Capacitive Load (µF)	Efficiency Full Load Typ (%)
			No Load	Full Load			
AM6CW-2403SLPZ	24 (9-36)	3.3	5	261	1500	1800	79
AM6CW-2405SLPZ	24 (9-36)	5	5	292	1200	1000	83
AM6CW-2409SLPZ	24 (9-36)	9	5	292	667	680	85
AM6CW-2412SLPZ	24 (9-36)	12	5	292	500	470	87
AM6CW-2415SLPZ	24 (9-36)	15	5	292	400	220	87
AM6CW-2424SLPZ	24 (9-36)	24	5	292	250	100	88
AM6CW-4803SLPZ	48 (18-75)	3.3	5	130	1500	1800	79
AM6CW-4805SLPZ	48 (18-75)	5	5	146	1200	1000	83
AM6CW-4812SLPZ	48 (18-75)	12	5	146	500	470	87
AM6CW-4815SLPZ	48 (18-75)	15	5	146	400	220	88
AM6CW-4824SLPZ	48 (18-75)	24	5	146	250	100	88
AM6CW-11005SH22LPZ	110 (40-160)	5	3	68	1200	1000	80
AM6CW-11012SH22LPZ	110 (40-160)	12	3	68	500	470	84
AM6CW-11015SH22LPZ	110 (40-160)	15	3	68	400	220	85
AM6CW-11024SH22LPZ	110 (40-160)	24	3	68	250	100	86

Dual Output

Model	Input Voltage (VDC)	Output Voltage (VDC)	Nominal Vin Input Current Typ (mA)		Output Current Max (mA)	Maximum Capacitive Load (µF)	Efficiency Full Load Typ (%)
			No Load	Full Load			
AM6CW-2405DLPZ	24 (9-36)	±5	5	292	±600	470	83
AM6CW-2412DLPZ	24 (9-36)	±12	5	292	±250	100	87
AM6CW-2415DLPZ	24 (9-36)	±15	5	292	±200	100	87
AM6CW-2424DLPZ	24 (9-36)	±24	5	292	±125	100	87
AM6CW-4805DLPZ	48 (18-75)	±5	5	146	±600	470	83
AM6CW-4812DLPZ	48 (18-75)	±12	5	146	±250	100	87
AM6CW-4815DLPZ	48 (18-75)	±15	5	146	±200	100	88
AM6CW-11005DH22LPZ	110 (40-160)	±5	3	68	±600	470	80
AM6CW-11012DH22LPZ	110 (40-160)	±12	3	68	±250	100	84
AM6CW-11015DH22LPZ	110 (40-160)	±15	3	68	±200	100	85

Input Specification

Parameters	Conditions	Minimum	Typical	Maximum	Units
Voltage Types				4:1	
Surge Voltage	24V input (1 sec. max.)	-0.7		50	V
	48V input (1 sec. max.)	-0.7		100	V
	110V input (1 sec. max.)	-0.7		180	V
Input reflected ripple current	24V & 48V input		20		mA
	110V input		25		mA
Start-up voltage	24V input			9	V
	48V input			18	V
	110V input			40	V

Input Under-voltage protection	24V input	5.5	6.5		V
	48V input	12	15.5		V
	110V input	28	33		V
Input filter	Pi filter				
On/Off control (110Vin dual output models)	ON – open or 3.5-12VDC; OFF – short to –Vin or 0-1.2VDC, Idle current: 3 - 8mA				

Isolation Specification

Parameters	Conditions	Typical	Maximum	Units
Tested isolation voltage	Input / output, 60 sec, ≤ 1mA, 24/48Vin models	≥1500		VDC
	Input / output, 60 sec, ≤ 1mA, 110Vin models	≥2250		VDC
	Input to case / output to case, 60 sec, ≤ 1mA, 110Vin models	≥1600		VDC
Resistance	Input / output, 500VDC	≥1000		MΩ
Capacitance	Input / output, 100KHz / 0.1V	1000		pF

Output Specification

Parameters	Conditions	Typical	Maximum	Units
Voltage Tolerance	100% load @ Vin (nom.)	±1	±3	%
Line Regulation	LL to HL at Full Load, 24/48Vin models, output 1	±0.2	±0.5	%
	LL to HL at Full Load, 24/48Vin models, output 2	±0.5	±1	%
	LL to HL at Full Load, 110Vin models	±0.5	±1	%
Load Regulation	5% to 100% load, output 1	±0.5	±1	%
	5% to 100% load, output 2	±0.5	±1.5	%
Cross Regulation	Dual, positive output 50% load, negative output 10% to 100% Load, 24/48Vin models		±5	%
	Dual, positive output 50% load, negative output 25% to 100% Load, 110Vin models		±10	%
Transient Recovery Time	25% load step change	300	500	µs
Transient recovery deviation	25% load step change, 24/48Vin @ 3.3/5/±5Vout models	±5	±8	%
	25% load step change, 110Vin @ 5/±5Vout models	±3	±8	%
	25% load step change, others	±3	±5	%
Ripple & Noise	20MHz Bandwidth, 100% load	50	100	mV pk-pk

General Specifications

Parameters	Conditions	Minimum	Typical	Maximum	Units
Switching frequency	100% load, PWM mode		300		KHz
Over Current protection	24/48Vin models	110	140		%Io
	110Vin models	120		210	%Io
Over voltage protection	Input voltage range	110		160	%Vo
Short Circuit Protection	Continuous, Auto recovery				
Operating temperature	With derating	-40		85	°C
Storage temperature		-55		125	°C
Cooling	Free air convection				
Humidity	Non-condensing	5		95	% RH
Temperature Coefficient	100% Load			±0.03	%/°C
Maximum soldering temperature	1.5mm from case for 10 sec			+300	°C
Case material	Aluminum alloy				
Weight	24/48Vin models		12		g
	110Vin models		21		g

Dimensions (L x W x H)	1.00x 1.00 x 0.47 inches (25.40 x 25.40 x 12.00 mm)	
Vibration	IEC/EN61373, category 1/grade B	
MTBF		≥ 1 000 000 hrs (MIL-HDBK -217F, t=+25°C)
NOTE: All specifications in this datasheet are measured at an ambient temperature of 25°C, humidity<75%, nominal input voltage and at rated output load unless otherwise specified.		

Safety Specifications		
Parameters		
Standards	Designed to meet EN55016-2-1 (110Vin models)	
	Information technology Equipment	Designed to meet UL/EN/IEC 62368-1 (24/48Vin models) Designed to meet EN/IEC 62368-1 (110Vin models)
	Electronic equipment in railway application	Designed to meet EN50155 (110Vin models)
	EMI - Conducted and radiated emission	CISPR32/EN 55032, Class B, with the recommended EMC circuit
	Electrostatic Discharge Immunity	EN61000-4-2
	RF, Electromagnetic Field Immunity	EN61000-4-3
	Electrical Fast Transient/Burst Immunity	EN61000-4-4
	Surge Immunity	EN61000-4-5
	RF, Electromagnetic Field Immunity	EN61000-4-6

Derating

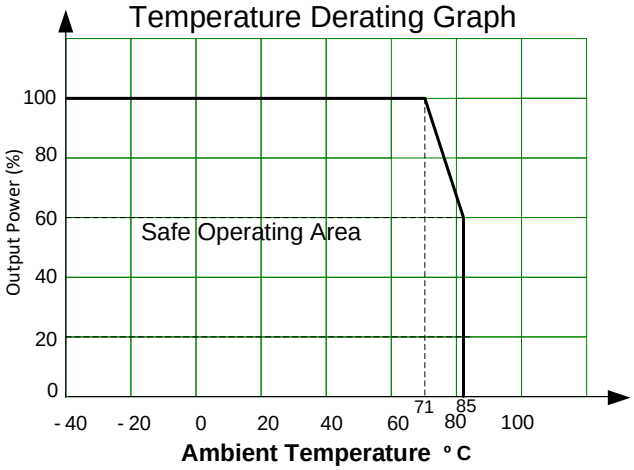

Typical application circuit

Single Output 24/48Vin models

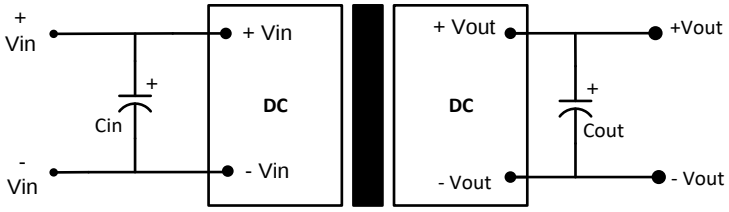

24/48Vin models					
Vin	Cin	Single Vout	Cout	Dual Vout	Cout
24VDC	100µF /50V	3.3VDC	10µF/ 50V	±5VDC	10µF/ 50V
48VDC	47µF/ 100V	5VDC		±12VDC	
		9VDC		±15VDC	
		12VDC		±24VDC	
		15VDC		--	
		24VDC		--	

Dual Output 24/48Vin models

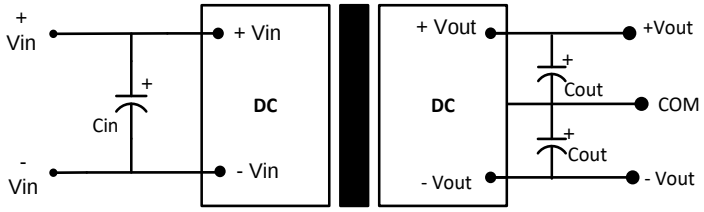

110Vin models

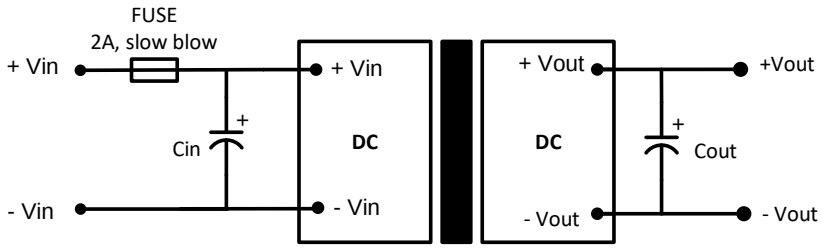

110Vin models			
Vin	Cin	Vout	Cout
110VDC	10~47µF	5VDC	10µF
		12VDC	
		15VDC	
		24VDC	
		±5VDC	
		±12VDC	
		±15VDC	

Recommended EMC circuit

24/48Vin models

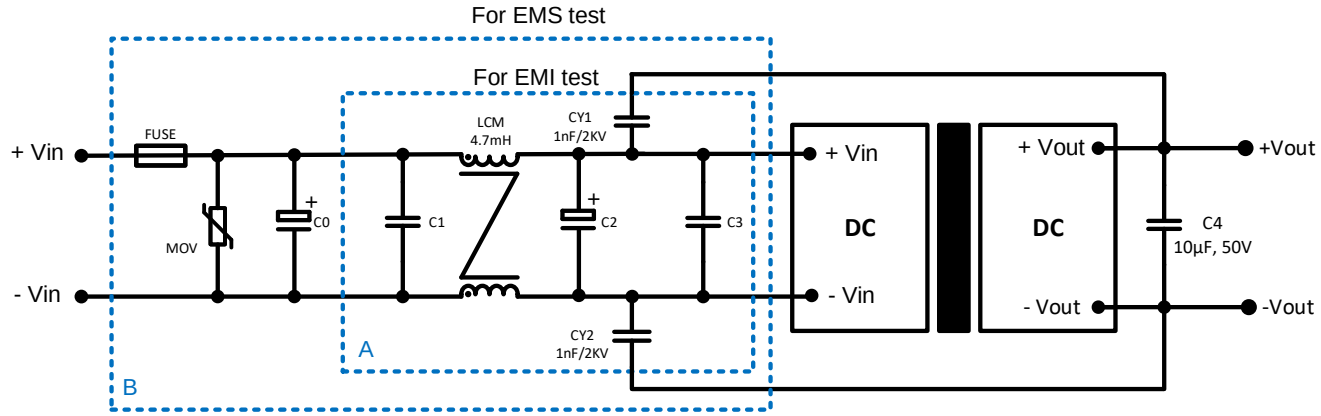

Parameter Description		
Model	Vin:24VDC	Vin:48VDC
FUSE	Choose according to actual input current	
MOV	20D470K	14D101K
C0	680μF/50V	680μF/100V
C1	1μF/50V	1μF/100V
C2	330μF/50V	330μF/100V
C3	4.7μF/50V	4.7μF/100V

110Vin models

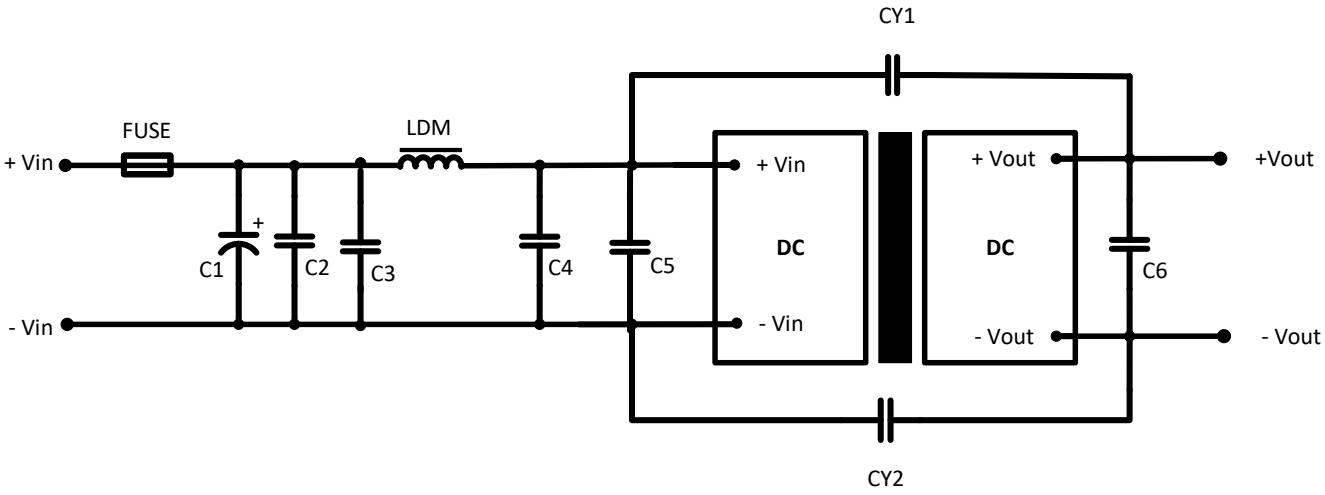

Parameter Description	
Model	Vin:110VDC
FUSE	Choose according to actual input current
C1	100μF/200V
C2, C3, C4, C5	0.22μF/250V
LDM	68μH
CY1, CY2	1nF/3KV
C6	10μF

Dimension

24/48Vin models

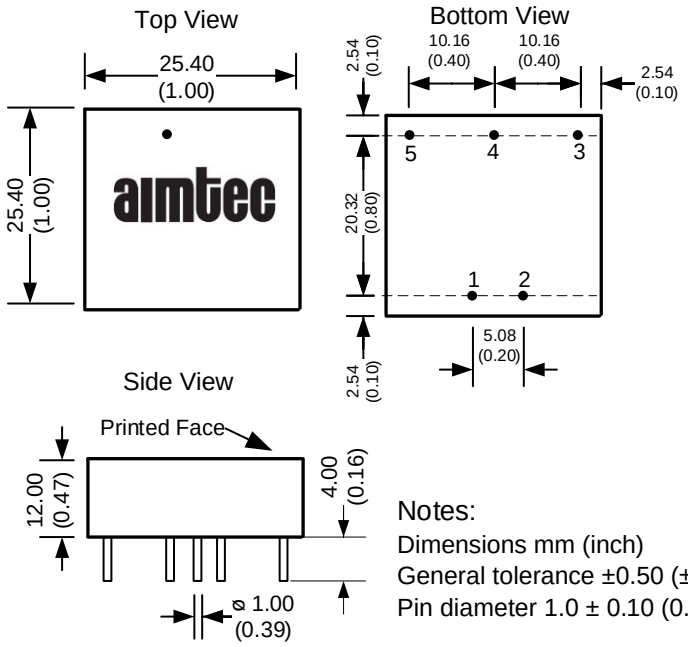

Pin Out Specifications		
Pin	Single	Dual
1	+Vin	+Vin
2	-Vin	-Vin
3	-Vout	-Vout
4	No Pin	COM
5	+Vout	+Vout

Notes:
Dimensions mm (inch)
General tolerance ±0.50 (±0.02)
Pin diameter 1.0 ± 0.10 (0.04 ± 0.004)

110Vin models

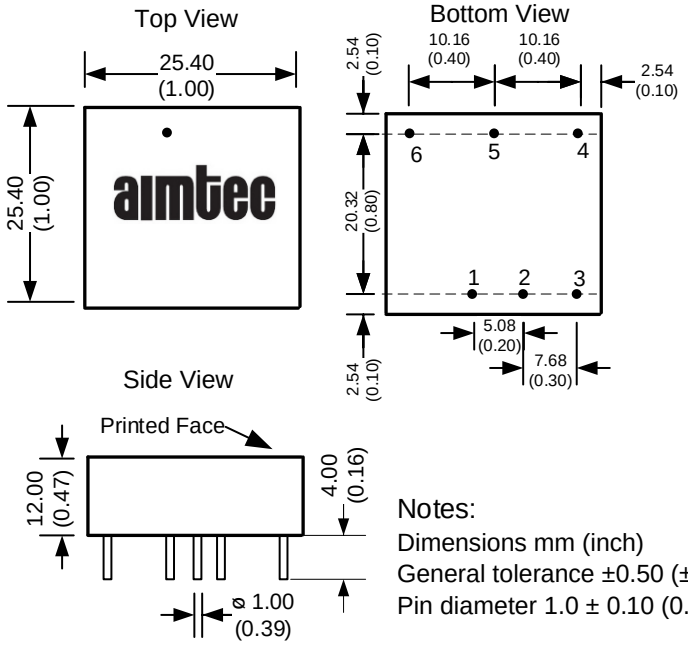

Pin Out Specifications		
Pin	Single	Dual
1	+Vin	+Vin
2	-Vin	-Vin
3	No Pin	On/off control
4	-Vout	-Vout
5	No Pin	COM
6	+Vout	+Vout

Notes:
Dimensions mm (inch)
General tolerance ±0.50 (±0.02)
Pin diameter 1.0 ± 0.10 (0.04 ± 0.004)

NOTE: 1. Datasheets are updated as needed and as such, specifications are subject to change without notice. Once printed or downloaded, datasheets are no longer controlled by Aimtec; refer to www.aimtec.com for the most current product specifications. **2.** Product labels shown, including safety agency certifications on labels, may vary based on the date manufactured. **3.** Mechanical drawings and specifications are for reference only. **4.** All specifications are measured at an ambient temperature of 25°C, humidity<75%, nominal input voltage and at rated output load unless otherwise specified. **5.** Aimtec may not have conducted destructive testing or chemical analysis on all internal components and chemicals at the time of publishing this document. CAS numbers and other limited information are considered proprietary and may not be available for release. **6.** This product is not designed for use in critical life support systems, equipment used in hazardous environments, nuclear control systems or other such applications which necessitate specific safety and regulatory standards other the ones listed in this datasheet. **7.** Warranty is in accordance with Aimtec's standard Terms of Sale available at www.aimtec.com.