Click to ORDER samples

AM6G-LPZ



SIP8

Aimtec adds the AM6G-LPZ 6W series to its SIP8 DC/DC converters family. With the new 6W single/dual output series, Aimtec provides better coverage of the SIP8 package product up to 10W.
The AM6G-LPZ series provide a 2:1 input voltage range and comes standard with single/dual regulated output voltages of 3.3, 5, 9, 12, 15 and 24VDC with I/O isolation of 1500VDC.
Thanks to its wide -40°C to +85°C operating temperature range, the AM6G-LPZ is suitable for applications such as industrial control, grid power, instrumentation and telecommunication. In addition to meeting EN62368-1 certification, protections for input under-voltage, output short circuit, over-current are also included, increasing the overall safety of your new system design.

Features

- Wide 2:1 Input Range: 4.5-5.5VDC, 9-18VDC, 18-36VDC, 36-75VDC
- Operating Temp: -40 °C to +85 °C
- Low ripple & noise, up to 50mV(p-p) typ.
- Efficiency up to 87%
- Output short circuit, over current protection, Input under-voltage protection
- Regulated Output

RoHS
3yr Warranty
CE

Summary

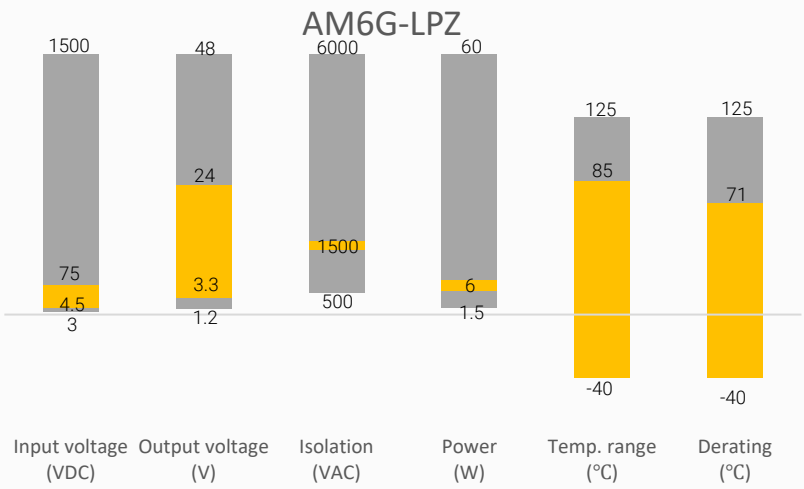

Training

Product Training Video (click to open)

Press Release

Coming Soon!

Application Notes

Applications

Power Grid
Industrial
Telecom
Instrumentation

Models & Specifications

Single Output

Model	Input Voltage (VDC)	Output Voltage (VDC)	Input Current Max (mA)		Output Current Max (mA)	Maximum Capacitive Load (µF)	Efficiency (%) Full Load (Typ.)
			No Load	Full Load			
AM6G-0505SLPZ	5 (4.5~9)	5	28	1538	1200	1000	80
AM6G-0512SLPZ	5 (4.5~9)	12	28	1538	500	470	84
AM6G-0515SLPZ	5 (4.5~9)	15	28	1538	400	220	84
AM6G-0524SLPZ	5 (4.5~9)	24	28	1538	250	100	84
AM6G-1203SLPZ	12 (9~18)	3.3	12	489	1350	1800	76
AM6G-1205SLPZ	12 (9~18)	5	12	625	1200	1000	80
AM6G-1209SLPZ	12 (9~18)	9	12	625	667	470	82
AM6G-1212SLPZ	12 (9~18)	12	12	625	500	470	84
AM6G-1215SLPZ	12 (9~18)	15	12	625	400	220	84
AM6G-1224SLPZ	12 (9~18)	24	12	625	250	100	84
AM6G-2403SLPZ	24 (18~36)	3.3	5	238	1350	1800	78
AM6G-2405SLPZ	24 (18~36)	5	5	305	1200	1000	82
AM6G-2409SLPZ	24 (18~36)	9	5	305	667	470	84
AM6G-2412SLPZ	24 (18~36)	12	5	305	500	470	86
AM6G-2415SLPZ	24 (18~36)	15	5	305	400	220	87
AM6G-2424SLPZ	24 (18~36)	24	5	305	250	100	85
AM6G-4803SLPZ	48 (36~75)	3.3	5	156	1350	1800	76
AM6G-4805SLPZ	48 (36~75)	5	5	146	1200	1000	81
AM6G-4809SLPZ	48 (36~75)	9	5	146	667	470	83
AM6G-4812SLPZ	48 (36~75)	12	5	146	500	470	85
AM6G-4815SLPZ	48 (36~75)	15	5	146	400	220	86
AM6G-4824SLPZ	48 (36~75)	24	5	146	250	100	84

Dual Output

Model	Input Voltage (VDC)	Output Voltage (VDC)	Input Current Max (mA)		Output Current Max (mA)	Maximum Capacitive Load (µF)	Efficiency (%) Full Load (Typ.)
			No Load	Full Load			
AM6G-0505DLPZ	5 (4.5~9)	±5	28	1538	±500	500	80
AM6G-0512DLPZ	5 (4.5~9)	±12	28	1538	±208	220	84
AM6G-0515DLPZ	5 (4.5~9)	±15	28	1538	±167	100	84
AM6G-0524DLPZ	5 (4.5~9)	±24	28	1538	±104	50	84

Input Specification

Parameters	Conditions	Typical	Maximum	Units
Voltage range	See models table			VDC
Filter	PI filter			
Absolute maximum rating	1 sec. max, 5VDC input models		12	VDC
	1 sec. max, 12VDC input models		25	VDC
	1 sec. max, 24VDC input models		50	VDC
	1 sec. max, 48VDC input models		100	VDC
Reflected ripple current		50		mA pk-pk

Start-up voltage	Nominal 5V input models		4.5	VDC
	Nominal 12V input models		9	VDC
	Nominal 24V input models		18	VDC
	Nominal 48V input models		36	VDC
Under voltage protection	Nominal 5V input models		4.5	VDC
	Nominal 12V input models	6.5		VDC
	Nominal 24V input models	15.5		VDC
	Nominal 48V input models	30		VDC
On/Off ctrl *	ON – Ctrl pin open or pulled high (3.5~12VDC) OFF – Ctrl pin pulled low to GND (0~0.7VDC), idle current 10mA max.			

* The Ctrl pin voltage is referenced to input GND.

Isolation Specification

Parameters	Conditions	Typical	Maximum	Units
Tested I/O voltage	60 sec, 1mA max	1500		VDC
Resistance	500VDC	≥1000		MΩ
Capacitance	I/O capacitance at 100KHz/0.1V	1000		pF

Output Specification

Parameters	Conditions	Typical	Maximum	Units
Voltage accuracy	5~100% load, 3.3/5Vout models	± 2	± 5	%
	5~100% load, Others	± 1	± 3	%
Line regulation	Full load	± 0.5	± 1	%
Load regulation	5~100% load	± 0.5	± 1.5	%
Over current protection		110~230, typ. 160		% Iout
Short circuit protection	Continuous, Auto recovery			
Temperature coefficient	Full load	± 0.02	± 0.03	%/°C
Ripple & Noise*	20MHz bandwidth, 5~100% load	50	150	mV pk-pk
Transient recovery time	25% load step change	300	500	µS
Transient response deviation	25% load step change	±3	±8	%

* Ripple and Noise are measured at 20MHz bandwidth by using a 1µF (M/C) and 22µF (E/C) parallel capacitor and typical input with full load

General Specifications

Parameters	Conditions	Typical	Maximum	Units
Switching frequency	100% load. PWM mode	500		KHz
Operating temperature	See derating graph	-40 to +85		°C
Storage temperature		-55 to +125		°C
Soldering temperature	1.5mm from case 10 sec max		300	°C
Cooling	Free air convection			
Humidity	Non-condensing		95	% RH
Case material	Heat resistant black Plastic (flammability to UL 94V-0)			
Vibration	10-150Hz, 5G, 0.75mm along X, Y and Z			
Weight	4			g
Dimensions (L x W x H)	0.87 x 0.37 x 0.47 inches, 22.00 x 9.50 x 12.00mm			
MTBF	> 1 000 000 hrs (MIL-HDBK -217F, t=+25°C) / Full Load			

Safety Specifications		
Parameters		
Standards	Designed to meet IEC/EN/UL62368-1	
	EMC - Conducted and radiated emission	CISPR32/EN55032, CLASS B with EMC recommended circuit
	Electrostatic Discharge Immunity	IEC 61000-4-2 Contact ±4KV, Criteria B
	RF, Electromagnetic Field Immunity	IEC 61000-4-3 10V/m, Criteria A
	Electrical Fast Transient/Burst Immunity	IEC 61000-4-4 ±2KV, Criteria B with EMC recommended circuit
	Surge Immunity	IEC 61000-4-5 L-L ±2KV, Criteria B with EMC recommended circuit
	RF, Conducted Disturbance Immunity	IEC 61000-4-6 3Vr.m.s, Criteria A
	Voltage dips, Short Interruptions & Voltage variations Immunity	IEC61000-4-29 0-70%, Criteria B

Derating

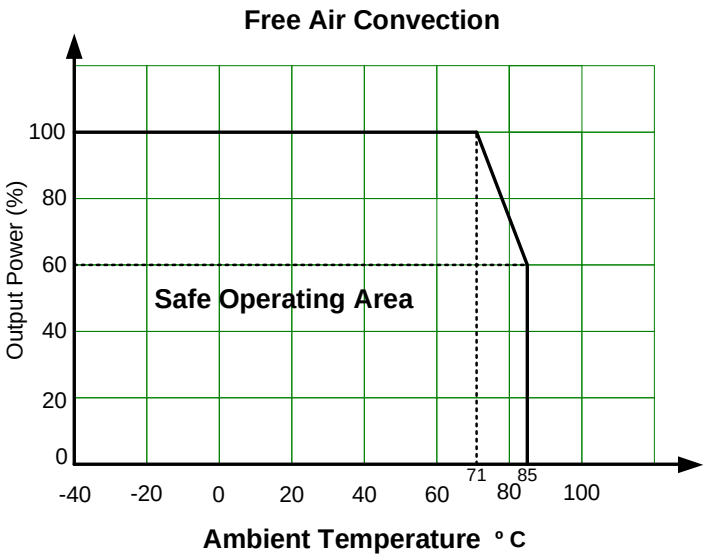

Typical Application Circuit

Single Output

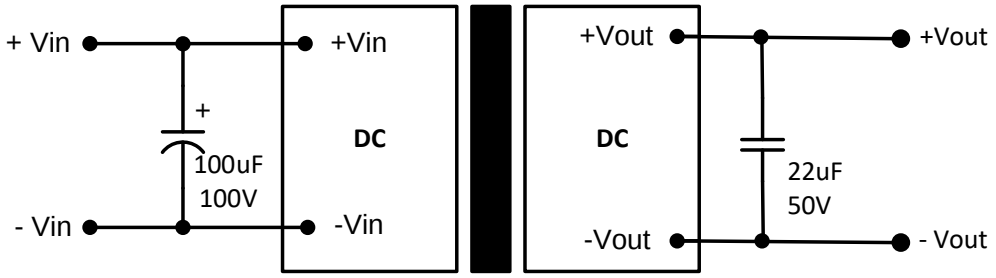

Dual Output

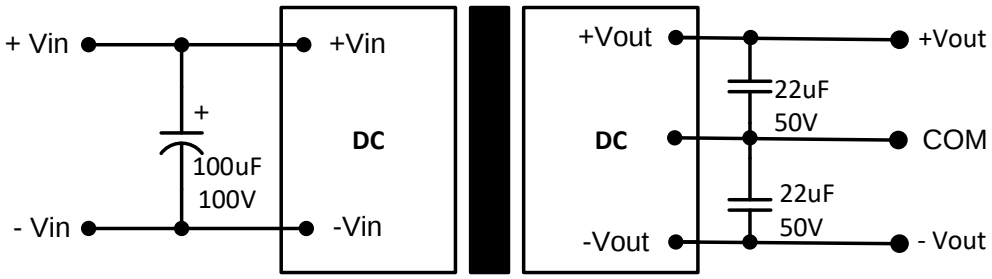

EMC Recommended Circuit

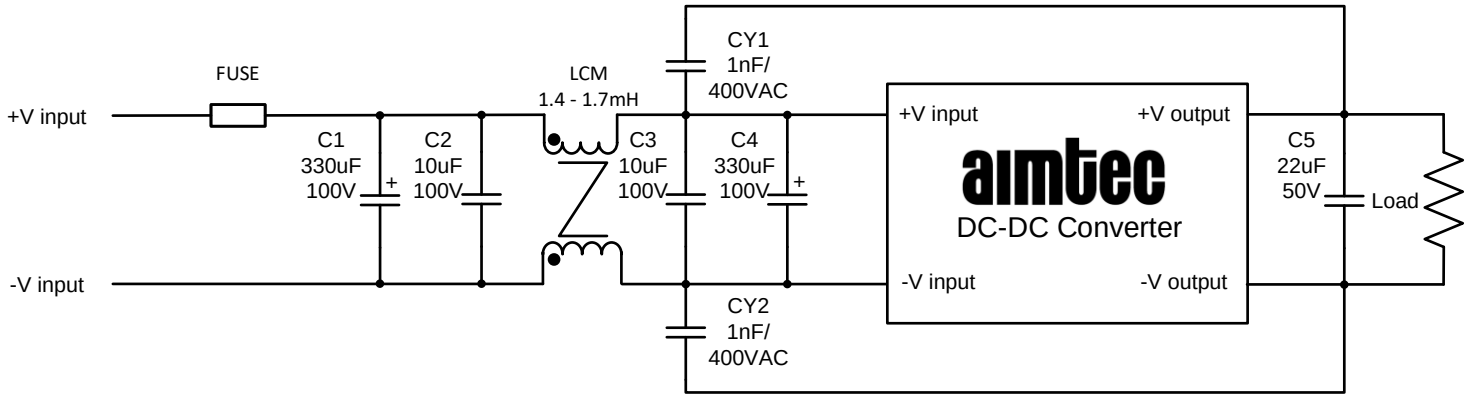

Fuse : Choose according to actual input current.

Dimensions

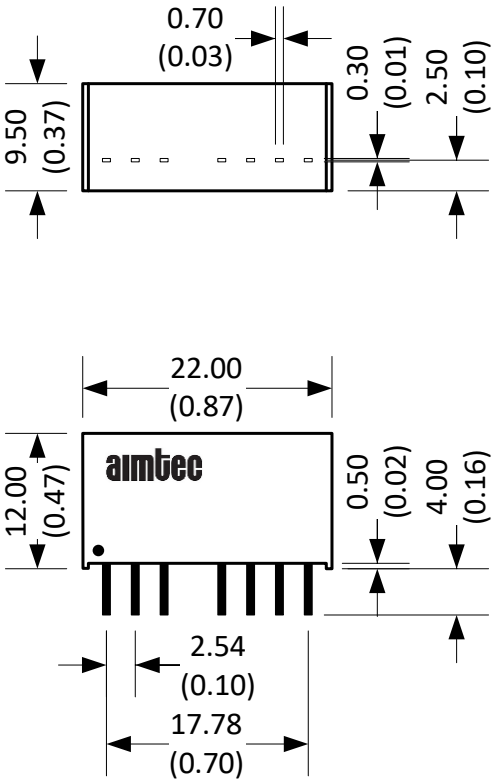

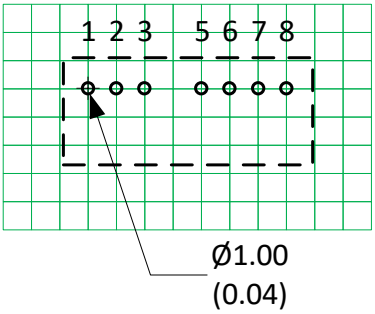

Note : Grid 2.54*2.54 mm

Notes:
All dimensions are typical in millimeters (inches).
Pin section tolerances : ±0.10 (±0.004)
General tolerance : ±0.25 (±0.01)

Pin Out Specifications		
Pin	Single	Dual
1	-V Input	-V Input
2	+V Input	+V Input
3	Ctrl On/Off	Ctrl On/Off
5	NC	NC
6	+V Output	+V Output
7	-V Output	Common
8	NC	-V Output

NOTE: 1. Datasheets are updated as needed and as such, specifications are subject to change without notice. Once printed or downloaded, datasheets are no longer controlled by Aimtec; refer to www.aimtec.com for the most current product specifications. **2.** Product labels shown, including safety agency certifications on labels, may vary based on the date manufactured. **3.** Mechanical drawings and specifications are for reference only. **4.** All specifications are measured at an ambient temperature of 25°C, humidity<75%, nominal input voltage and at rated output load unless otherwise specified. **5.** Aimtec may not have conducted destructive testing or chemical analysis on all internal components and chemicals at the time of publishing this document. CAS numbers and other limited information are considered proprietary and may not be available for release. **6.** This product is not designed for use in critical life support systems, equipment used in hazardous environments, nuclear control systems or other such applications which necessitate specific safety and regulatory standards other the ones listed in this datasheet. **7.** Warranty is in accordance with Aimtec's standard Terms of Sale available at www.aimtec.com.