Click to ORDER samples

AM6GH-LPZ

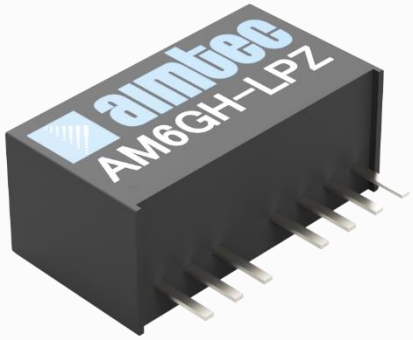

SIP8

Aimtec adds the AM6GH-LPZ 6W series to its SIP8 DC/DC converters family. With the new 6W single/dual output series, Aimtec provides better coverage of the SIP8 package product up to 10W.
The AM6GH-LPZ series provide a 4:1 input voltage range and comes standard with single/dual regulated output voltages of 3.3, 5, 6, 9, 12, 15 and 24VDC with I/O isolation of 1500VDC.
Thanks to its wide -40°C to +85°C operating temperature range, the AM6GH-LPZ is suitable for applications such as industrial control, grid power, instrumentation and telecommunication. In addition to meeting EN62368-1 certification, protections for input under-voltage, output short circuit, over-current are also included, increasing the overall safety of your new system design.

Features

- Wide 4:1 Input Range: 9-36VDC, 18-75VDC
- Operating Temp: -40 °C to +85 °C
- Low ripple & noise, up to 50mV(p-p) typ.
- Efficiency up to 87%
- Output short circuit, over current protection, Input under-voltage protection
- Regulated Output

RoHS

3yr Warranty

CE

Summary

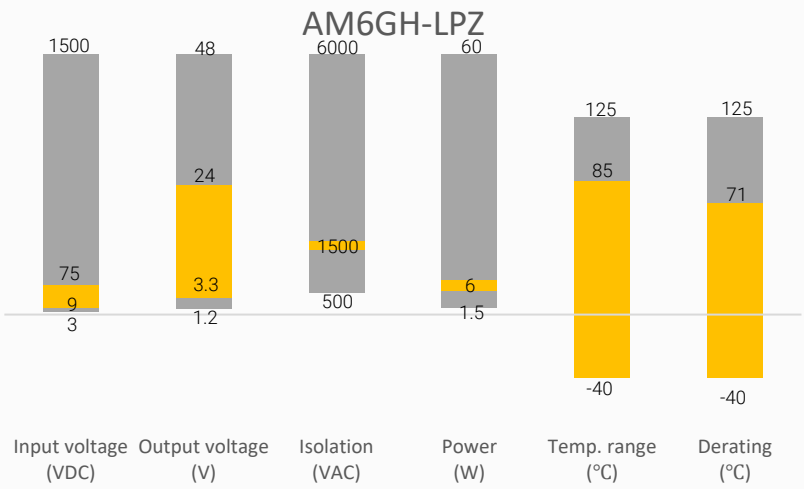

Training

Product Training Video (click to open)

Press Release

Coming Soon!

Application Notes

Applications

Power Grid

Industrial

Telecom

Instrumentation

Models & Specifications

Single Output

Model	Input Voltage (VDC)	Output Voltage (VDC)	Input Current Max (mA)		Output Current Max (mA)	Maximum Capacitive Load (µF)	Efficiency (%) Full Load (Typ.)
			No Load	Full Load			
AM6GH-2403SLPZ	24 (9~36)	3.3	5	238	1350	1800	78
AM6GH-2405SLPZ	24 (9~36)	5	5	305	1200	1000	82
AM6GH-2406SLPZ	24 (9~36)	6	5	305	1000	680	82
AM6GH-2409SLPZ	24 (9~36)	9	5	305	667	470	84
AM6GH-2412SLPZ	24 (9~36)	12	5	305	500	470	86
AM6GH-2415SLPZ	24 (9~36)	15	5	305	400	220	87
AM6GH-2424SLPZ	24 (9~36)	24	5	305	250	100	85
AM6GH-4803SLPZ	48 (18~75)	3.3	5	156	1600	1200	79
AM6GH-4805SLPZ	48 (18~75)	5	5	156	1200	680	83
AM6GH-4809SLPZ	48 (18~75)	9	5	146	667	330	84
AM6GH-4812SLPZ	48 (18~75)	12	5	146	500	330	86
AM6GH-4815SLPZ	48 (18~75)	15	5	146	400	150	87
AM6GH-4824SLPZ	48 (18~75)	24	5	146	250	68	87

Dual Output

Model	Input Voltage (VDC)	Output Voltage (VDC)	Input Current Max (mA)		Output Current Max (mA)	Maximum Capacitive Load (µF)	Efficiency (%) Full Load (Typ.)
			No Load	Full Load			
AM6GH-2405DLPZ	24 (9~36)	±5	5	305	±600	470	80
AM6GH-2409DLPZ	24 (9~36)	±9	5	305	±333	220	83
AM6GH-2412DLPZ	24 (9~36)	±12	5	305	±250	120	83
AM6GH-2415DLPZ	24 (9~36)	±15	5	305	±200	100	83
AM6GH-2424DLPZ	24 (9~36)	±24	5	305	±125	68	82
AM6GH-4805DLPZ	48 (18~75)	±5	5	156	±600	470	80
AM6GH-4809DLPZ	48 (18~75)	±9	5	146	±333	220	83
AM6GH-4812DLPZ	48 (18~75)	±12	5	146	±250	120	83
AM6GH-4815DLPZ	48 (18~75)	±15	5	146	±200	100	83
AM6GH-4824DLPZ	48 (18~75)	±24	5	146	±125	68	82

Input Specification

Parameters	Conditions	Typical	Maximum	Units
Voltage range	See models table			VDC
Filter	Capacitor			
Absolute maximum rating	1 sec. max, 24VDC input models	> -0.7	50	VDC
	1 sec. max, 48VDC input models	> -0.7	100	VDC
Reflected ripple current		50		mA pk-pk
Start-up voltage	Nominal 24V input models		9	VDC
	Nominal 48V input models		18	VDC
Under voltage protection	Nominal 24V input models	6.5		VDC
	Nominal 48V input models	15.5		VDC
On/Off ctrl *	ON – Ctrl pin open or pulled high (3.5~12VDC)			

	OFF – Ctrl pin pulled low to GND (0~1.2VDC), idle current 10mA max.

* The Ctrl pin voltage is referenced to input GND.

Isolation Specification

Parameters	Conditions	Typical	Maximum	Units
Tested I/O voltage	60 sec, 1mA max	1500		VDC
Resistance	500VDC	≥1000		MΩ
Capacitance	I/O capacitance at 100KHz/0.1V	1000		pF

Output Specification

Parameters	Conditions	Typical	Maximum	Units
Voltage accuracy	5~100% load	± 1	± 3	%
Line regulation	Full load	± 0.5	± 1	%
Load regulation	5~100% load	± 0.5	± 1.5	%
Over current protection		110~230, typ. 160		% Iout
Short circuit protection	Continuous, Auto recovery			
Temperature coefficient	Full load		± 0.03	%/°C
Ripple & Noise*	20MHz bandwidth, 5~100% load	50	100	mV pk-pk
Transient recovery time	25% load step change	300	500	µS
Transient response deviation	25% load step change, 3.3/5/±5Vout models	±5	±8	%
	25% load step change, others	±3	±5	%

* Ripple and Noise are measured at 20MHz bandwidth by using a 1µF (M/C) and 22µF (E/C) parallel capacitor and typical input with full load

General Specifications

Parameters	Conditions	Typical	Maximum	Units
Switching frequency	100% load. PWM mode	312.5	400	KHz
Operating temperature	See derating graph	-40 to +85		°C
Storage temperature		-55 to +125		°C
Soldering temperature	1.5mm from case 10 sec max		300	°C
Cooling	Free air convection			
Humidity	Non-condensing	> 5	95	% RH
Case material	Heat resistant black Plastic (flammability to UL 94V-0)			
Vibration	10-150Hz, 5G, 0.75mm along X, Y and Z			
Weight		4.9		g
Dimensions (L x W x H)	0.87 x 0.37 x 0.47 inches, 22.00 x 9.50 x 12.00mm			
MTBF	> 1 000 000 hrs (MIL-HDBK -217F, t=+25°C) / Full Load			

Safety Specifications

Parameters		
Standards	Designed to meet IEC/EN/UL62368-1	
	EMC - Conducted and radiated emission	CISPR32/EN55032, CLASS B with EMC recommended circuit
	Electrostatic Discharge Immunity	IEC 61000-4-2 Contact ±4KV, Criteria B
	RF, Electromagnetic Field Immunity	IEC 61000-4-3 10V/m, Criteria A
	Electrical Fast Transient/Burst Immunity	IEC 61000-4-4 ±2KV, Criteria B with EMC recommended circuit
	Surge Immunity	IEC 61000-4-5 L-L ±2KV, Criteria B with EMC recommended circuit
	RF, Conducted Disturbance Immunity	IEC 61000-4-6 3Vr.m.s, Criteria A

Derating

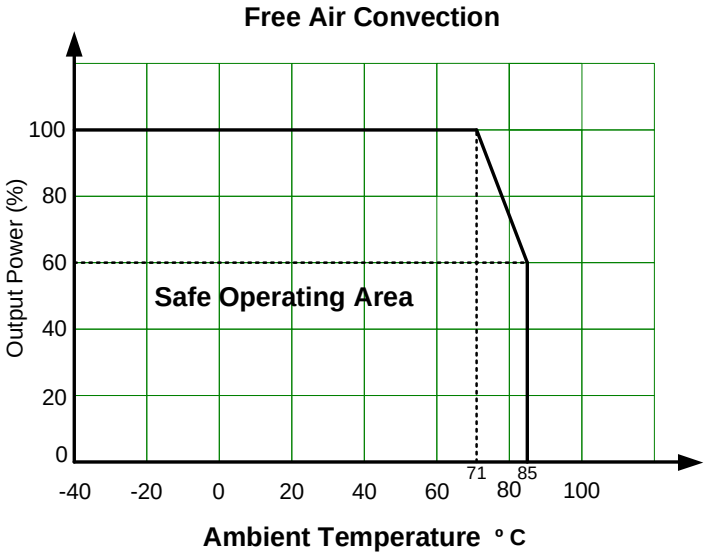

Typical Application Circuit

Single Output

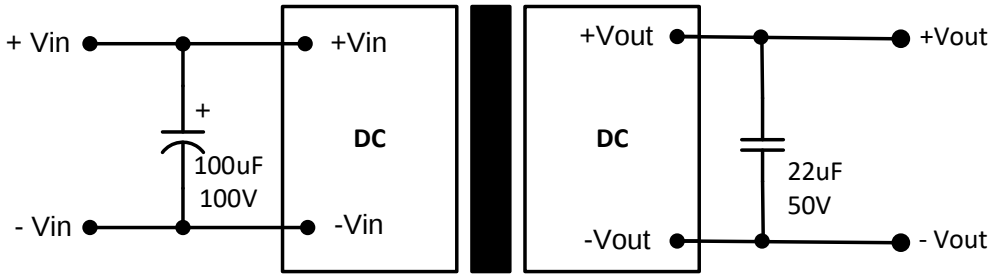

Dual Output

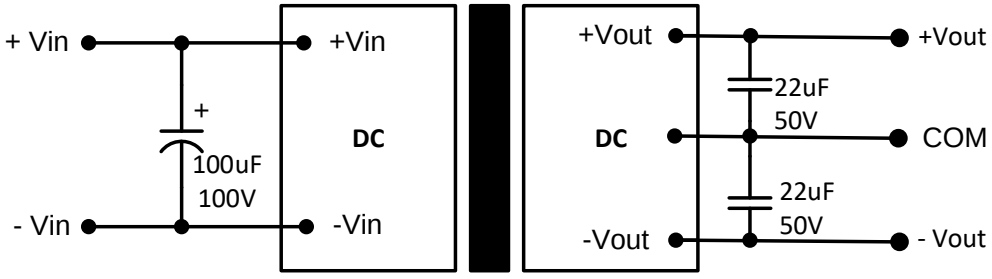

EMC Recommended Circuit

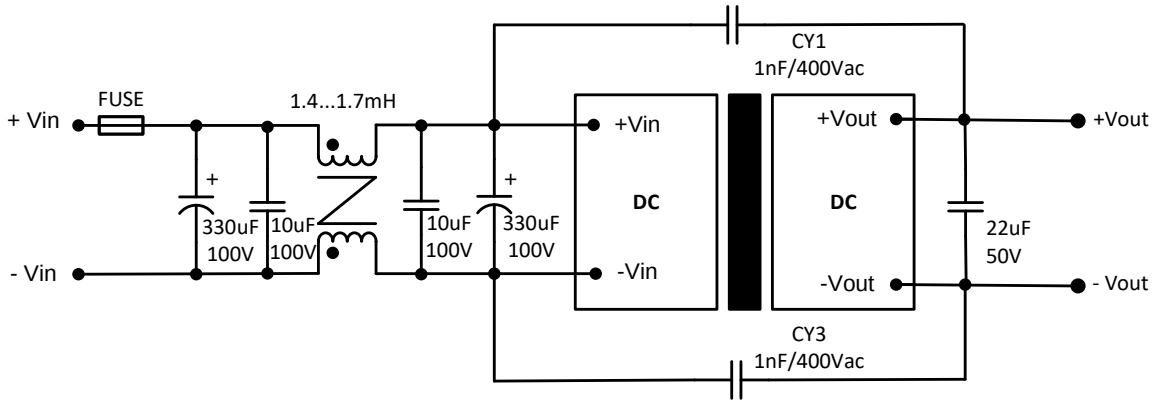

Fuse : Choose according to actual input current.

Dimensions

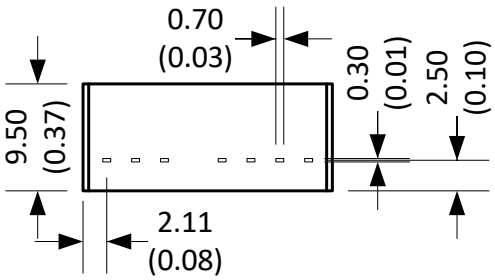

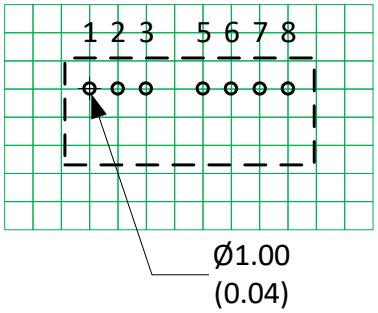

Note : Grid 2.54*2.54 mm

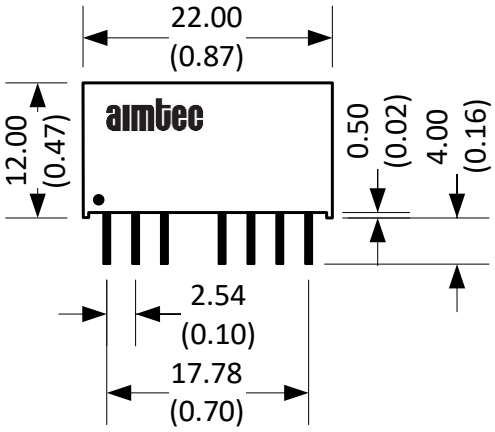

Notes:
All dimensions are typical in millimeters (inches).
Pin section tolerances : ±0.10 (±0.004)
General tolerance : ±0.50 (±0.02)

Pin Out Specifications		
Pin	Single	Dual
1	-V Input	-V Input
2	+V Input	+V Input
3	Ctrl On/Off	Ctrl On/Off
5	NC	NC
6	+V Output	+V Output
7	-V Output	Common
8	NC	-V Output

NOTE: 1. Datasheets are updated as needed and as such, specifications are subject to change without notice. Once printed or downloaded, datasheets are no longer controlled by Aimtec; refer to www.aimtec.com for the most current product specifications. **2.** Product labels shown, including safety agency certifications on labels, may vary based on the date manufactured. **3.** Mechanical drawings and specifications are for reference only. **4.** All specifications are measured at an ambient temperature of 25°C, humidity<75%, nominal input voltage and at rated output load unless otherwise specified. **5.** Aimtec may not have conducted destructive testing or chemical analysis on all internal components and chemicals at the time of publishing this document. CAS numbers and other limited information are considered proprietary and may not be available for release. **6.** This product is not designed for use in critical life support systems, equipment used in hazardous environments, nuclear control systems or other such applications which necessitate specific safety and regulatory standards other the ones listed in this datasheet. **7.** Warranty is in accordance with Aimtec's standard Terms of Sale available at www.aimtec.com.