aimtec
Your Power Partner

Series AM6GH-Z

6 Watt | DC-DC Converter



FEATURES:

- SIP8 Package
- High Efficiency up to 87%
- On / Off Control
- No Minimum Load
- Operating Temperature -40°C to +71°C
- Continuous Short Circuit Protection
- Input / Output Isolation 1500 & 3000 VDC
- Wide 4:1 Input Range

Models
Single Output

Model	Input Voltage (V)	Output Voltage (V)	Output Current Max (mA)	Isolation (VDC)	Input Current Full | No Load (mA)		Capacitor Load (µF)	Efficiency (%)
AM6GH-2403SZ	9-36	3.3	1500	1500	261	6	4700	79
AM6GH-2405SZ	9-36	5	1200	1500	298	6	2200	84
AM6GH-2409SZ	9-36	9	666	1500	290	6	1000	86
AM6GH-2412SZ	9-36	12	500	1500	287	6	470	87
AM6GH-2415SZ	9-36	15	400	1500	287	6	220	87
AM6GH-2424SZ	9-36	24	250	1500	287	6	100	87
AM6GH-4803SZ	18-75	3.3	1500	1500	131	6	4700	79
AM6GH-4805SZ	18-75	5	1200	1500	151	6	2200	83
AM6GH-4809SZ	18-75	9	666	1500	147	6	1000	85
AM6GH-4812SZ	18-75	12	500	1500	144	6	470	87
AM6GH-4815SZ	18-75	15	400	1500	144	6	220	87
AM6GH-4824SZ	18-75	24	250	1500	144	6	100	87
AM6GH-2403SH30Z	9-36	3.3	1500	3000	261	6	4700	79
AM6GH-2405SH30Z	9-36	5	1200	3000	298	6	2200	84
AM6GH-2409SH30Z	9-36	9	666	3000	290	6	1000	86
AM6GH-2412SH30Z	9-36	12	500	3000	287	6	470	87
AM6GH-2415SH30Z	9-36	15	400	3000	287	6	220	87
AM6GH-2424SH30Z	9-36	24	250	3000	287	6	100	87
AM6GH-4803SH30Z	18-75	3.3	1500	3000	131	6	4700	79
AM6GH-4805SH30Z	18-75	5	1200	3000	151	6	2200	83
AM6GH-4809SH30Z	18-75	9	666	3000	147	6	1000	85
AM6GH-4812SH30Z	18-75	12	500	3000	144	6	470	87
AM6GH-4815SH30Z	18-75	15	400	3000	144	6	220	87
AM6GH-4824SH30Z	18-75	24	250	3000	144	6	100	87

Models
Dual output

Model	Input Voltage (V)	Output Voltage (V)	Output Current Max (mA)	Isolation (VDC)	Input Current Full | No Load (mA)		Capacitor Load (µF)	Efficiency (%)
AM6GH-2405DZ	9-36	±5	±600	1500	298	6	±330	84
AM6GH-2412DZ	9-36	±12	±250	1500	291	6	±220	86
AM6GH-2415DZ	9-36	±15	±200	1500	287	6	±100	87
AM6GH-4805DZ	18-75	±5	±600	1500	152	6	±330	82
AM6GH-4812DZ	18-75	±12	±250	1500	147	6	±220	85
AM6GH-4815DZ	18-75	±15	±200	1500	145	6	±100	86
AM6GH-2405DH30Z	9-36	±5	±600	3000	298	6	±330	84
AM6GH-2412DH30Z	9-36	±12	±250	3000	291	6	±220	86
AM6GH-2415DH30Z	9-36	±15	±200	3000	287	6	±100	87
AM6GH-4805DH30Z	18-75	±5	±600	3000	152	6	±330	82
AM6GH-4812DH30Z	18-75	±12	±250	3000	147	6	±220	85
AM6GH-4815DH30Z	18-75	±15	±200	3000	145	6	±100	86

NOTE: All specifications in this datasheet are measured at an ambient temperature of 25°C, humidity<75%, nominal input voltage and at rated output load unless otherwise specified

Input Specifications

Parameters	Nominal	Typical	Maximum	Units
Voltage range	24 48	9-36 18-75		VDC
Filter	Capacitor			
Transient recovery time		250		µs
Transient Response deviation	3.3 & 5 V output		±3 ±5	%
Start up time	Nominal input voltage and constant resistive load	30		ms
Absolute Maximum Rating	24 Vin 48 Vin	-0.7-50 -0.7-100		VDC
Peak Input Voltage time			100	ms
On / Off Control	ON – high impedance or open; OFF – 2-4mA input current through 1KΩ (standby 2.5mA typ.)			
Input reflected ripple current*	24Vin 48Vin	20 40		mA p-p

* The input reflected ripple current should be measured with connected 12µH inductor and 47µF input capacitor (ESR<1Ω at 100 KHz)

Isolation Specifications

Parameters	Conditions	Typical	Rated	Units
Tested I/O voltage	60 sec		1500 & 3000	VDC
Resistance		> 1000		MOhm
Capacitance			50	pF

Output Specifications

Parameters	Conditions	Typical	Maximum	Units
Voltage accuracy			±1	%
Cross Regulation (Dual)	1st output 25% to 100%, 2nd output 100%	±5		%
Short Circuit protection	Continuous			
Short Circuit restart	Auto recovery			
Line voltage regulation	LL~HL		±0.2	%
Load voltage regulation	(0 to 100% load) Single (0 to 100% load) 3.3V, 5V, & Dual		±0.5 ±1.0	%
Temperature coefficient		±0.02		%/ºC
Ripple & Noise*	At 20MHz Bandwidth		125	mV p-p

* Measured with a 100nF CC.

General Specifications

Parameters	Conditions	Typical	Maximum	Units
Switching frequency	100% load	580		KHz
Operating temperature	Derating above +71ºC	-40 to +71		ºC
Storage temperature		-55 to +125		ºC
Max Case temperature			+100	ºC
Cooling	Free air convection (30-65 LFM)			
Humidity			95	%
Case material	Non-conductive black plastic			
Potting material	Epoxy (UL94V-0 rated)			
Pin Material	C5191R-H Solder coated			
Weight		4.5		g
Dimensions (L x W x H)	0.86 x 0.36 x 0.44 inch	21.85 x 9.20 x 11.10 mm		
MTBF	>800,000 hrs (MIL-HDBK -217F, Ground Benign, t=+25ºC)			

Safety Specifications

Parameters	
Agency Approvals	UL
Standards	UL 60950-1:2001 & UL 62368-1
	Design to meet IEC/EN 60950-1, 62368-1

	EN55032 Class A, EN55024 (external class A circuit required)
	IEC61000-4-2, Perf. Criteria A
	IEC61000-4-3, Perf. Criteria A
	IEC61000-4-4, Perf. Criteria A (external EFT/Surge circuit required)
	IEC61000-4-5, Perf. Criteria A (external EFT/Surge circuit required)
	IEC61000-4-6, Perf. Criteria A
	IEC61000-4-8, Perf. Criteria A

Pin Out Specifications

Pin	1500 VDC		3000 VDC	
	Single	Dual	Single	Dual
1	- V Input	- V Input	- V Input	- V Input
2	+ V Input	+ V Input	+ V Input	+ V Input
3	On/Off Control	On/Off Control	On/Off Control	On/Off Control
5	N.C.	N.C.	No Pin	No Pin
6	+ V Output	+ V Output	+ V Output	+ V Output
7	- V Output	Common	- V Output	Common
8	N.C.	- V Output	N.C.	- V Output

Dimensions

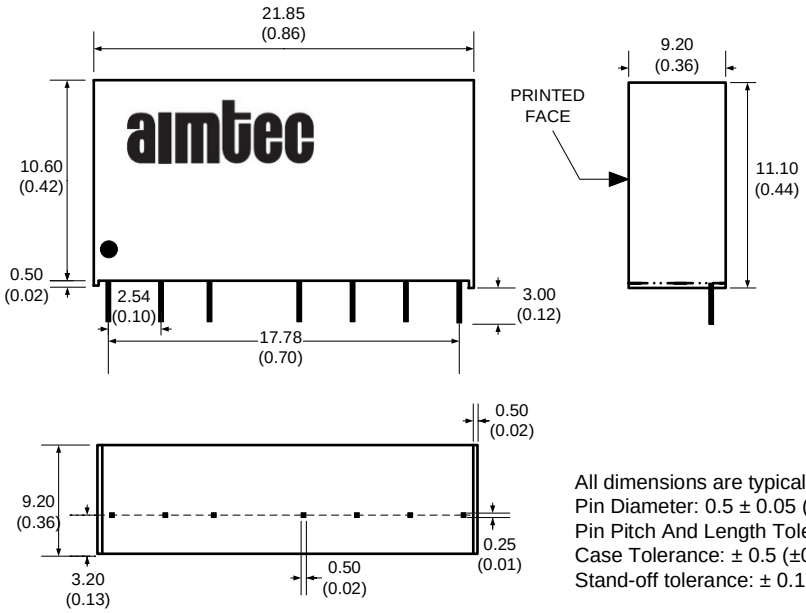

All dimensions are typical in millimeters (inches)
Pin Diameter: 0.5 ± 0.05 (0.02 ± 0.002)
Pin Pitch And Length Tolerance: ± 0.35 (±0.014)
Case Tolerance: ± 0.5 (±0.02)
Stand-off tolerance: ± 0.1 (±0.004)

Input Reflected Ripple Test Circuit

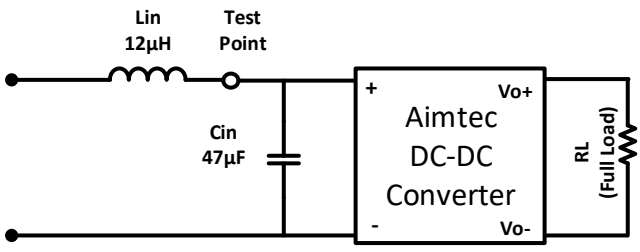

* Tested at full load, and nominal input

Derating

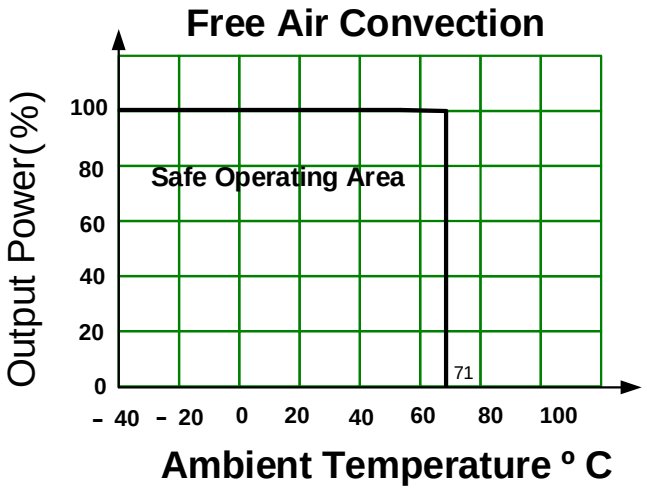

Class A EMI, external filter

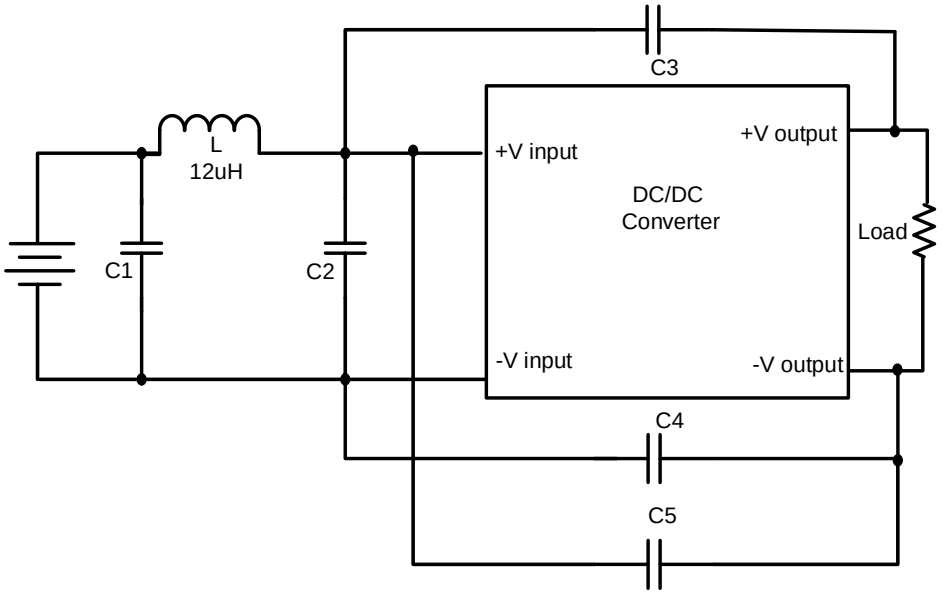

Vin	C1 & C2	C3 & C4	C5
24VDC	10µF/35V, MLCC	470pF/3KV, MLCC	-
48VDC	2.2µF/100V, MLCC	1nF/3KV, MLCC	1nF/3KV, MLCC

EFT/Surge Application circuit

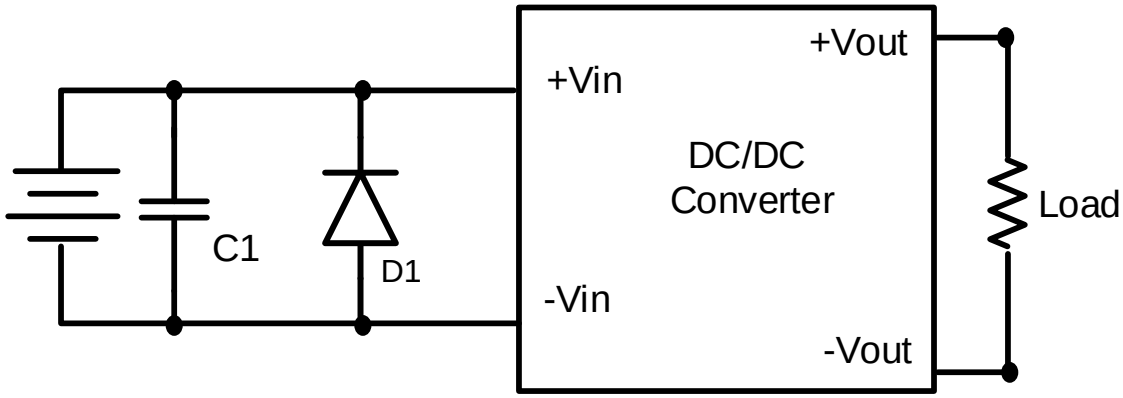

Vin	C1	D1
24VDC	300µF/100V	TVS, 3kW, 75V
48VDC	470µF/100V	TVS, 3kW, 130V

Control ON/OFF pin connection example:

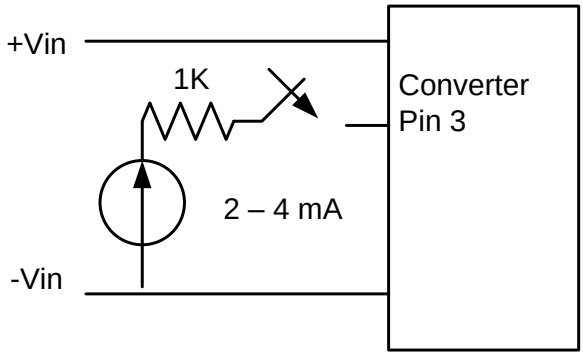

The voltage could be applied trough a limiting resistor. The converter is turned on the external switching circuit is open.

Recommended circuit for class B compliance

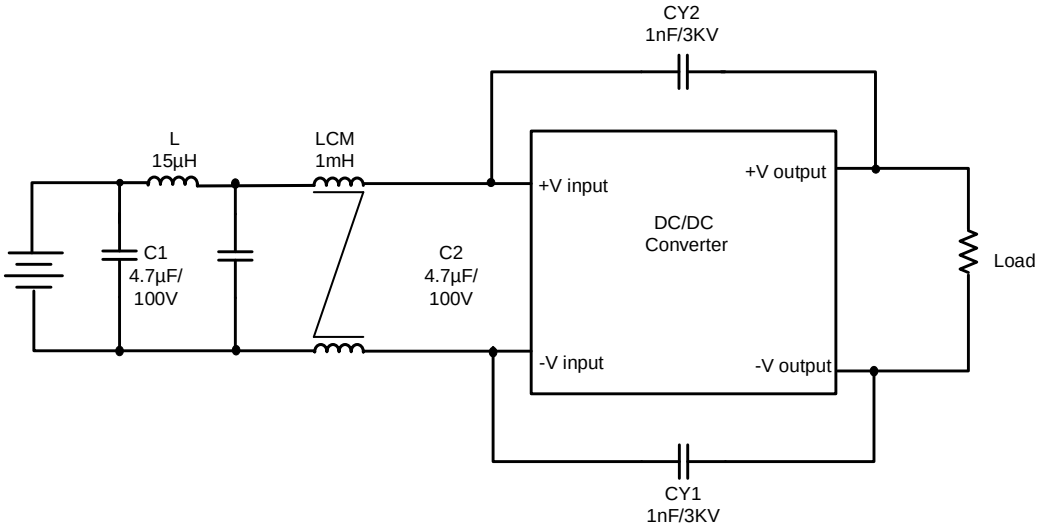

NOTE: 1. Datasheets are updated as needed and as such, specifications are subject to change without notice. Once printed or downloaded, datasheets are no longer controlled by Aimtec; refer to www.aimtec.com for the most current product specifications. **2.** Product labels shown, including safety agency certifications on labels, may vary based on the date manufactured. **3.** Mechanical drawings and specifications are for reference only. **4.** All specifications are measured at an ambient temperature of 25°C, humidity<75%, nominal input voltage and at rated output load unless otherwise specified. **5.** Aimtec may not have conducted destructive testing or chemical analysis on all internal components and chemicals at the time of publishing this document. CAS numbers and other limited information are considered proprietary and may not be available for release. **6.** This product is not designed for use in critical life support systems, equipment used in hazardous environments, nuclear control systems or other such applications which necessitate specific safety and regulatory standards other the ones listed in this datasheet. **7.** Warranty is in accordance with Aimtec's standard Terms of Sale available at www.aimtec.com.