Click to ORDER samples

AM6T-LPZ



24PIN DIP Package

The AM6T-LPZ is a 6W 24PIN DIP DC/DC converter that offers great cost savings thanks to an improved manufacturing process. It also features excellent reliability and performance while offering a standard input voltage range of 4.5-75VDC as well as an output voltage of -24 to 24V. This compact 24PIN DIP design will surely benefit your new system design.

This new series offers a great operating temperature range from -40 to 85°C. Also, an isolation of 1500VDC for improved reliability and system safety.

The AM6T-LPZ is suitable for many applications such as industrial systems, portable equipment, and internet of things.

Features

- Continuous Short circuit protection
- Operating Temp: -40 °C to +85 °C
- Industry standard 24PIN DIP pin-out
- Efficiency up to 88%
- Regulated output
- 2:1 Input Voltages Range

Summary

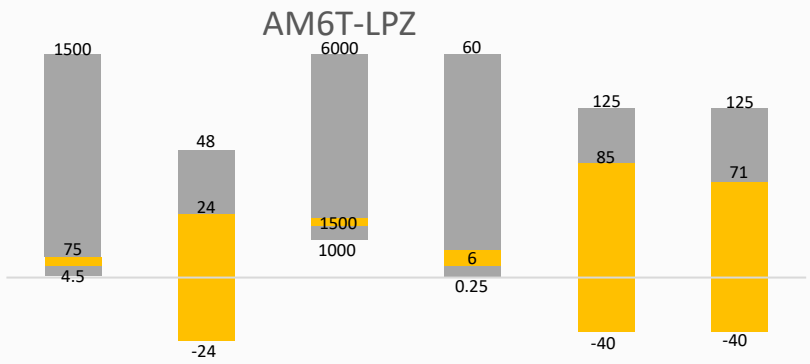

RoHS

3yr Warranty

Training

Product Training Video (click to open)

Press Release

Coming Soon!

Application Notes

Applications

Industrial

Portable Equipment

IoT

Models & Specifications

Single Output								
Model	Input Voltage (VDC)	Output Voltage (VDC)	Output Current max (mA)	Input Current		Efficiency Typ. (%)	Maximum Capacitive Load (µF)	Isolation (VDC)
				No Load mA	Full Load mA			
AM6T-0505SLPZ	5 (4.5-9)	5	1200	10	1428	78	1000	1500
AM6T-0512SLPZ	5 (4.5-9)	12	500	10	1428	84	470	1500
AM6T-0515SLPZ	5 (4.5-9)	15	400	10	1428	84	220	1500
AM6T-0524SLPZ	5 (4.5-9)	24	250	10	1428	84	100	1500
AM6T-1203SLPZ	12 (9-18)	3	1500	7	607	75	1800	1500
AM6T-1205SLPZ	12 (9-18)	5	1200	7	607	80	1000	1500
AM6T-1212SLPZ	12 (9-18)	12	500	7	607	84	470	1500
AM6T-1215SLPZ	12 (9-18)	15	400	7	607	85	220	1500
AM6T-1224SLPZ	12 (9-18)	24	250	7	607	85	100	1500
AM6T-2403SLPZ	24 (18-36)	3	1500	7	296	78	1800	1500
AM6T-2405SLPZ	24 (18-36)	5	1200	7	296	82	1000	1500
AM6T-2412SLPZ	24 (18-36)	12	500	7	296	85	470	1500
AM6T-2415SLPZ	24 (18-36)	15	400	7	296	86	220	1500
AM6T-2424SLPZ	24 (18-36)	24	250	7	296	86	100	1500
AM6T-4803SLPZ	48 (36-75)	3	1500	7	147	79	1800	1500
AM6T-4805SLPZ	48 (36-75)	5	1200	7	147	83	1000	1500
AM6T-4812SLPZ	48 (36-75)	12	500	7	147	87	470	1500
AM6T-4815SLPZ	48 (36-75)	15	400	7	147	88	220	1500
AM6T-4824SLPZ	48 (36-75)	24	250	7	147	87	100	1500

Dual Output								
Model	Input Voltage (VDC)	Output Voltage (VDC)	Output Current max (mA)	Input Current		Efficiency Typ. (%)	Maximum Capacitive Load (µF)	Isolation (VDC)
				No Load mA	Full Load mA			
AM6T-0505DLPZ	5 (4.5-9)	±5	±600	10	1428	78	1000	1500
AM6T-0512DLPZ	5 (4.5-9)	±12	±250	10	1428	84	470	1500
AM6T-0515DLPZ	5 (4.5-9)	±15	±200	10	1428	84	220	1500
AM6T-0524DLPZ	5 (4.5-9)	±24	±125	10	1428	84	100	1500
AM6T-1205DLPZ	12 (9-18)	±5	±600	7	607	80	680	1500
AM6T-1212DLPZ	12 (9-18)	±12	±250	7	607	84	330	1500
AM6T-1215DLPZ	12 (9-18)	±15	±200	7	607	85	220	1500
AM6T-1224DLPZ	12 (9-18)	±24	±125	7	607	84	100	1500
AM6T-2405DLPZ	24 (18-36)	±5	±600	7	296	83	680	1500
AM6T-2412DLPZ	24 (18-36)	±12	±250	7	296	86	330	1500
AM6T-2415DLPZ	24 (18-36)	±15	±200	7	296	87	220	1500
AM6T-2424DLPZ	24 (18-36)	±24	±125	7	296	85	100	1500
AM6T-4805DLPZ	48 (36-75)	±5	±600	7	147	83	680	1500
AM6T-4812DLPZ	48 (36-75)	±12	±250	7	147	87	330	1500
AM6T-4815DLPZ	48 (36-75)	±15	±200	7	147	85	220	1500
AM6T-4824DLPZ	48 (36-75)	±24	±125	7	147	85	100	1500

Input Specification

Parameters	Conditions	Typical	Maximum	Units
Voltage Types			2:1	
Startup Input Voltage*	5Vin models		4.5	VDC
	12Vin models		9	VDC
	24Vin models		18	VDC
	48Vin models		36	VDC
Input under-voltage lockout	5Vin models	>3.3	3.5	VDC
	12Vin models	>5.5	6.5	VDC
	24Vin models	>13	15	VDC
	48Vin models	>26	30	VDC
Absolute maximum rating	5Vin models, 1sec. max.	≥-0.7	16	VDC
	12Vin models, 1sec. max.	≥-0.7	25	VDC
	24Vin models, 1sec. max.	≥-0.7	50	VDC
	48Vin models, 1sec. max.	≥-0.7	100	VDC
Input reflected current	5Vin models	50		mA
	Others	20		mA

*Operating with less than 5% of rated load will not cause permanent damage to the converters, but the performance data may not fall into the specifications, and stable operating is not assured.

Isolation Specification

Parameters	Conditions	Minimum	Typical	Maximum	Units
Tested I/O voltage	60 sec, leakage ≤ 1mA		1500		VDC
Resistance	500VDC	1000			MΩ
Capacitance	Input / output, 100KHz / 0.1V		1000		pF

Output Specification

Parameters	Conditions	Typical	Maximum	Units
Voltage Tolerance	5~100% load	±1	±3	%
Output voltage balance	Dual output with balanced load	±0.5	±1.5	%
Line Regulation	Full load, main output	±0.2	±0.5	%
	Full load, other output	±0.5	±1.0	%
Load regulation	5~100% load, main output	±0.5	±1.0	%
	5~100% load, other output	±0.5	±1.5	%
Cross regulation	Dual output models, 50% load on 1st output and 10~100% load on 2nd output		±5	%
Ripple & Noise*			100	mV p-p
Temperature Coefficient	Full load		±0.03	%/°C
Transient recovery time	25% load step change	300	500	us
Transient recovery deviation	25% load step change, 3.3/5/±5Vout model	±5	±8	%
	25% load step change, others	±3	±5	%

* Ripple and Noise are measured at 20MHz bandwidth. Please refer to the application note for specific details.

General Specifications

Parameters	Conditions	Typical	Maximum	Units
Switching frequency		300		KHz
Over Current protection	Input voltage range	140	190	%Io

Over voltage protection	Input voltage range	>110	160	%Vo
Short circuit protection	Continuous, auto-recovery			
Operating temperature	With derating	-40 to +85		°C
Storage temperature		-55 to +125		°C
Cooling	Free air convection			
Humidity	Non-condensing		95	% RH
Maximum soldering temperature	1.5mm from case for 10 sec		+300	°C
Case material	Aluminum alloy			
Weight		14		g
Dimensions (L x W x H)	1.26 x 0.79 x 0.44 inches (32.0 x 20.0 x 11.1 mm)			
MTBF	> 1 000 000 hrs (MIL-HDBK -217F, t=+25°C) / Full Load			
NOTE: All specifications in this datasheet are measured at an ambient temperature of 25°C, humidity<75%, nominal input voltage and at rated output load unless otherwise specified.				

Safety Specifications		
Parameters		
Standards	Designed to meet UL/EN/IEC62368-1	
	EMI - Conducted and radiated emission	CISPR32/EN55032 Class B with recommended EMC circuit
	Electrostatic Discharge Immunity	IEC/EN 61000-4-2
	RF, Electromagnetic Field Immunity	IEC/EN 61000-4-3
	Electrical Fast Transient/Burst Immunity	IEC/EN 61000-4-4
	Surge Immunity	IEC/EN 61000-4-5
	RF, Conducted Disturbance Immunity	IEC/EN 61000-4-6
	Vibration	IEC/EN61373, category 1/grade B

Derating

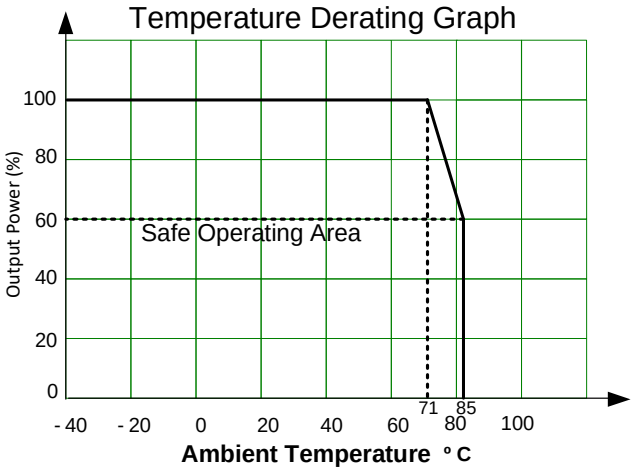

Typical application circuit

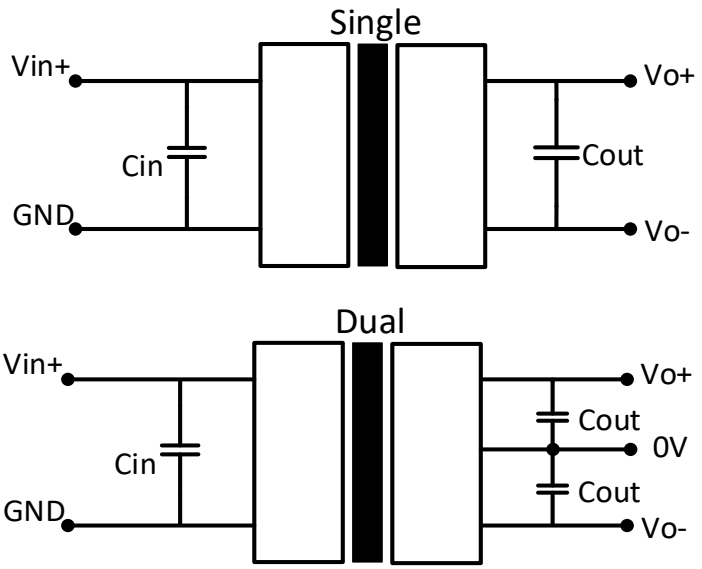

Vin	Cin	Cout
5VDC	100μF, 50V	10μF, 50V
12VDC	100μF, 50V	
24VDC	100μF, 50V	
48VDC	10-47μF, 100V	

EMC (CLASS B) Compliance Circuit

5Vin models:

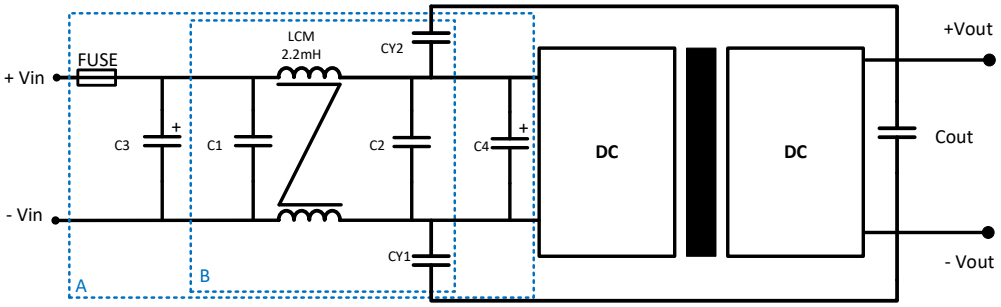

12/24/48Vin models:

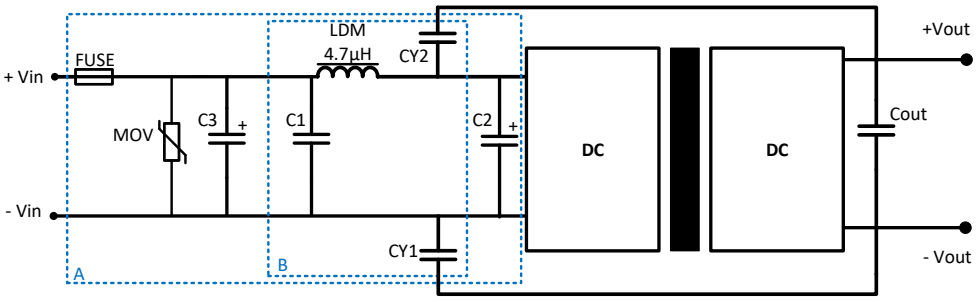

Model	MOV	C1	C2	C3	C4	Cout	CY1, CY2
5Vin	--	4.7μF/50V	4.7μF/50V	2200μF/35V	100μF/35V	10μF, 50V	2.2nF/2KV
12Vin	14D330K	1μF/50V	100μF/35V	1000μF/35V	--		1nF/2KV
24Vin	20D470K	1μF/50V	100μF/50V	1000μF/50V	--		1nF/2KV
48Vin	14D101K	1μF/100V	100μF/100V	680μF/100V	--		1nF/2KV

FUSE：Choose according to actual input current

Dimensions

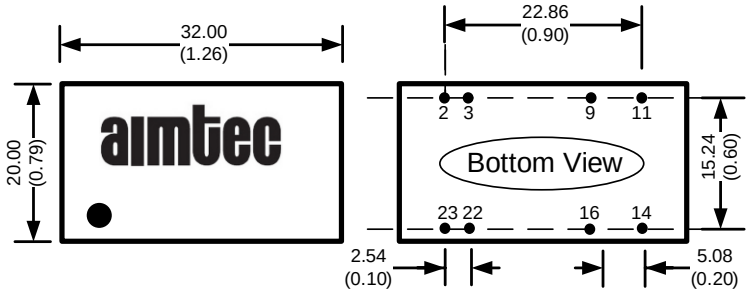

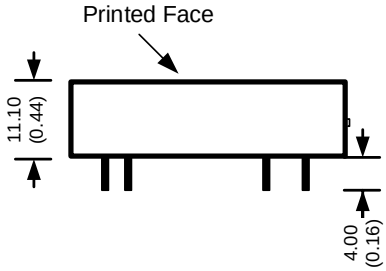

All dimensions are typical: millimeters (inches)
Pin Pitch Tolerance: ±0.10 (±0.004)
Case Tolerance: ±0.5 (±0.02)

Pin Out Specifications		
Pin	Single output	Dual output
2	-V Input	-V Input
3	-V Input	-V Input
9	No Pin	Common
11	NC	-V Output
14	+V Output	+V Output
16	-V Output	Common
22	+V Input	+V Input
23	+V Input	+V Input

NOTE: 1. Datasheets are updated as needed and as such, specifications are subject to change without notice. Once printed or downloaded, datasheets are no longer controlled by Aimtec; refer to www.aimtec.com for the most current product specifications. **2.** Product labels shown, including safety agency certifications on labels, may vary based on the date manufactured. **3.** Mechanical drawings and specifications are for reference only. **4.** All specifications are measured at an ambient temperature of 25°C, humidity<75%, nominal input voltage and at rated output load unless otherwise specified. **5.** Aimtec may not have conducted destructive testing or chemical analysis on all internal components and chemicals at the time of publishing this document. CAS numbers and other limited information are considered proprietary and may not be available for release. **6.** This product is not designed for use in critical life support systems, equipment used in hazardous environments, nuclear control systems or other such applications which necessitate specific safety and regulatory standards other the ones listed in this datasheet. **7.** Warranty is in accordance with Aimtec's standard Terms of Sale available at www.aimtec.com.