Click to ORDER samples

AM6TW-LPZ



DIP24

Aimtec adds the AM6TW-LPZ 6W series to its 24PIN DIP Package DC/DC converters family. With the 6W new single output series, Aimtec provides better coverage of the DIP package product up to 6W.

The AM6TW-LPZ series provide a wide 4:1 input voltage range and comes standard with single regulated output voltages of 3.3, 5, 6, 9, 12, 15, 18, 24, ±5, ±9, ±12, ±15, and ±24VDC with I/O isolation of 1500VDC/3000VDC/6000VDC.

Thanks to its wide -40°C to +85°C operating temperature range, the AM6TW-LPZ is suitable for applications such as industrial control, grid power, instrumentation, and telecommunication. In addition, there are protections for input under-voltage, output short circuit, over-current are also included, increasing the overall safety of your new system design.

Features

- Wide 4:1 Input Range: 9-36VDC & 18-75VDC
- Operating Temp: -40 °C to +85 °C
- Low ripple & noise, up to 100mV(p-p) typ.
- Efficiency up to 88%
- Output short circuit, over current protection, Input under-voltage protection
- Regulated Output

RoHS

3yr Warranty

Summary

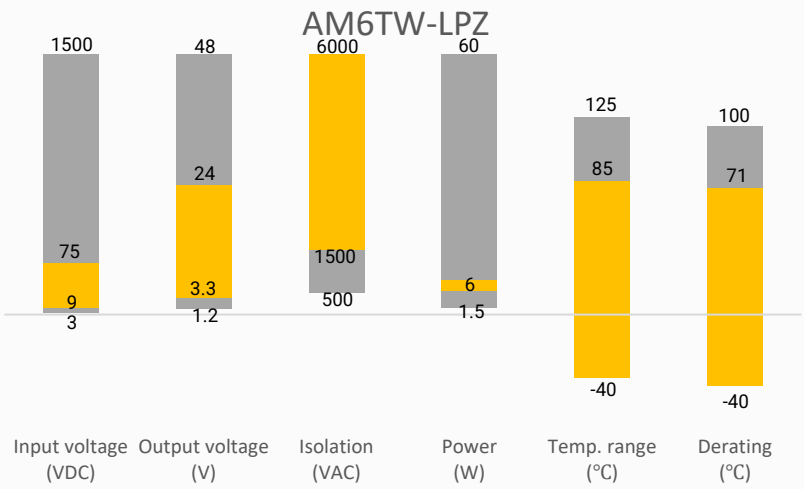

Training

Product Training Video (click to open)

Press Release

Application Notes

Coming Soon!

Applications



Power Grid | Industrial | Telecom | Instrumentation

Models & Specifications

Single Output							
Model	Input Voltage (VDC)	Output Voltage (VDC)	Input Current Max (mA)		Output Current Max (mA)	Maximum Capacitive Load (µF)	Efficiency (%) Full Load (Typ.)
			No Load	Full Load			
AM6TW-2403SLPZ	24 (9 ~ 36)	3.3	5	302	1500	1800	77
AM6TW-2405SLPZ	24 (9 ~ 36)	5	5	302	1200	1000	82
AM6TW-2409SLPZ	24 (9 ~ 36)	9	5	302	667	680	83
AM6TW-2412SLPZ	24 (9 ~ 36)	12	5	302	500	470	85
AM6TW-2415SLPZ	24 (9 ~ 36)	15	5	302	400	220	86
AM6TW-2424SLPZ	24 (9 ~ 36)	24	5	302	250	100	86
AM6TW-4803SLPZ	48 (18 ~ 75)	3.3	4	156	1500	1800	80
AM6TW-4805SLPZ	48 (18 ~ 75)	5	4	156	1200	1000	84
AM6TW-4809SLPZ	48 (18 ~ 75)	9	4	156	667	680	85
AM6TW-4812SLPZ	48 (18 ~ 75)	12	4	156	500	470	87
AM6TW-4815SLPZ	48 (18 ~ 75)	15	4	156	400	220	88
AM6TW-4824SLPZ	48 (18 ~ 75)	24	4	156	250	100	87
AM6TW-2403SH30LPZ	24 (9 ~ 36)	3.3	10	261	1500	1800	77
AM6TW-2405SH30LPZ	24 (9 ~ 36)	5	10	297	1200	1000	82
AM6TW-2409SH30LPZ	24 (9 ~ 36)	9	10	297	667	680	83
AM6TW-2412SH30LPZ	24 (9 ~ 36)	12	10	297	500	470	85
AM6TW-2415SH30LPZ	24 (9 ~ 36)	15	10	297	400	220	86
AM6TW-2424SH30LPZ	24 (9 ~ 36)	24	10	297	250	100	86
AM6TW-4803SH30LPZ	48 (18 ~ 75)	3.3	4	131	1500	1800	80
AM6TW-4805SH30LPZ	48 (18 ~ 75)	5	4	146	1200	1000	84
AM6TW-4809SH30LPZ	48 (18 ~ 75)	9	4	146	667	680	85
AM6TW-4812SH30LPZ	48 (18 ~ 75)	12	4	146	500	470	87
AM6TW-4815SH30LPZ	48 (18 ~ 75)	15	4	146	400	220	88
AM6TW-4824SH30LPZ	48 (18 ~ 75)	24	4	146	250	100	87
AM6TW-2405SH60LPZ	24 (9 ~ 36)	5	5	309	1200	2700	80
AM6TW-2406SH60LPZ	24 (9 ~ 36)	6	5	309	1000	2200	81
AM6TW-2409SH60LPZ	24 (9 ~ 36)	9	5	309	667	1800	83
AM6TW-2412SH60LPZ	24 (9 ~ 36)	12	5	309	500	1000	84
AM6TW-2415SH60LPZ	24 (9 ~ 36)	15	5	309	400	680	85
AM6TW-2418SH60LPZ	24 (9 ~ 36)	18	5	309	333	1200	85
AM6TW-2424SH60LPZ	24 (9 ~ 36)	24	5	309	250	470	84
AM6TW-4805SH60LPZ	48 (18 ~ 75)	5	4	154	1200	2700	81
AM6TW-4809SH60LPZ	48 (18 ~ 75)	9	4	154	667	1800	83
AM6TW-4812SH60LPZ	48 (18 ~ 75)	12	4	154	500	1000	84
AM6TW-4815SH60LPZ	48 (18 ~ 75)	15	4	154	400	680	85
AM6TW-4824SH60LPZ	48 (18 ~ 75)	24	4	154	250	470	84

Dual Output

Model	Input Voltage (VDC)	Output Voltage (VDC)	Input Current Max (mA)		Output Current Max (mA)	Maximum Capacitive Load (µF)	Efficiency (%) Full Load (Typ.)
			No Load	Full Load			
AM6TW-2405DLPZ	24 (9 ~ 36)	±5	5	302	±600	680	82
AM6TW-2409DLPZ	24 (9 ~ 36)	±9	5	302	±333	220	84
AM6TW-2412DLPZ	24 (9 ~ 36)	±12	5	302	±250	330	85
AM6TW-2415DLPZ	24 (9 ~ 36)	±15	5	302	±200	220	88
AM6TW-2424DLPZ	24 (9 ~ 36)	±24	5	302	±125	100	86
AM6TW-4805DLPZ	48 (18 ~ 75)	±5	4	156	±600	680	83
AM6TW-4812DLPZ	48 (18 ~ 75)	±12	4	156	±250	330	87
AM6TW-4815DLPZ	48 (18 ~ 75)	±15	4	156	±200	220	88
AM6TW-2405DH30LPZ	24 (9 ~ 36)	±5	10	297	±600	680	82
AM6TW-2409DH30LPZ	24 (9 ~ 36)	±9	10	297	±333	220	84
AM6TW-2412DH30LPZ	24 (9 ~ 36)	±12	10	297	±250	330	85
AM6TW-2415DH30LPZ	24 (9 ~ 36)	±15	10	297	±200	220	88
AM6TW-2424DH30LPZ	24 (9 ~ 36)	±24	10	297	±125	100	86
AM6TW-4805DH30LPZ	48 (18 ~ 75)	±5	4	146	±600	680	83
AM6TW-4812DH30LPZ	48 (18 ~ 75)	±12	4	146	±250	330	87
AM6TW-4815DH30LPZ	48 (18 ~ 75)	±15	4	146	±200	220	88

Input Specification

Parameters	Conditions	Typical	Maximum	Units
Voltage range	See models table	4:1		VDC
Filter	Capacitor			
Reflected Input Ripple Current		20		mA
Absolute maximum rating	24VDC input models, 1 sec. max		-0.7~50	VDC
	48VDC input models, 1 sec. max		-0.7~100	VDC
Start-up voltage	Nominal 24V input models		9	VDC
	Nominal 48V input models		18	VDC
Under voltage protection	Nominal 24V input models	6.5		VDC
	Nominal 48V input models	15.5		VDC

Isolation Specification

Parameters	Conditions	Typical	Maximum	Units
Tested I/O voltage	60 sec, leakage ≤ 1mA, 1500VDC models	1500		VDC
	60 sec, leakage ≤ 1mA, 3000VDC models	3000		VDC
	60 sec, leakage ≤ 1mA, 6000VDC models	6000		VDC
Resistance	500VDC	≧1000		MΩ
Capacitance	I/O capacitance at 100KHz/0.1V, 1500 & 3000VDC models	1000		pF
	I/O capacitance at 100KHz/0.1V, 6000VDC models	13	20	pF
Isolation Creepage and Clearances (6000VDC models)	PBC Clearance and Creepage	≥ 8.0		mm
	Optocoupler Creepage	≥ 8.0		mm
	Transformer Creepage	≥ 8.0		mm
	Transformer Clearance	≥ 5.0		mm

Insulation System	6000VDC models	Reinforced Isolation		
Leakage Current	6000VDC models, 240VAC/60Hz	3.6	5	µA
Protection Grade	6000VDC models, 240VAC/60Hz	2xMOPP		

Output Specification

Parameters	Conditions	Typical	Maximum	Units
Voltage Tolerance		± 1	± 3	%
Balanced Load	Dual output models	± 0.5	± 1.5	%
Line Regulation	Full load, output 1	± 0.2	± 0.5	%
	Full load, output 2	± 0.5	± 1.0	%
Load Regulation	5 ~ 100% load, output 1	± 0.5	± 1.0	%
	5 ~ 100% load, output 2	± 0.5	± 1.5	%
Cross Voltage Regulation	Output 1 50% load, output 2 10~100% load		± 5	%
Over Current Protection	1500 & 3000VDC models	110~190, typ. 140		% Iout
	6000VDC models	110~260, typ. 150		% Iout
Short Circuit Protection	Continuous, hiccup, auto-recovery			
Over-Voltage Protection	Output voltage range	≧110	160	%Vo
Temperature Coefficient	Full load		± 0.03	%/ °C
Ripple & Noise	20MHz bandwidth, 1500VDC models	50	100	mV pk-pk
	20MHz bandwidth, 3000VDC models	85	120	mV pk-pk
	20MHz bandwidth, 6000VDC models	100	180	mV pk-pk
Transient Recovery Time	25% load step change	300	500	µS
Transient Response Deviation	25% load step change, 1.5KV & 3KV 3.3/5/±5Vout models	± 5	± 8	%
	25% load step change, others	± 3	± 5	%

General Specifications

Parameters	Conditions	Typical	Maximum	Units
Switching frequency		300		KHz
Operating temperature	See derating graph	-40 to +85		°C
Storage temperature		-55 to +125		°C
Soldering temperature	1.5mm from case 10 sec max		300	°C
Cooling	Free air convection			
Humidity	Non-condensing		95	% RH
Vibration	IEC/EN 61373 Category 1, Class B			
Case material	1500VDC models	Aluminum Alloy		
	3000 & 6000VDC models	Black flame-retardant plastic (UL94 V-0)		
Weight	1500VDC models	14		g
	3000 & 6000VDC models	13		g
Dimensions (L x W x H)	1500VDC models	1.26 x 0.79 x 0.44 inches (32.0 x 20.0 x 11.1 mm)		
	3000 & 6000VDC models	1.26 x 0.79 x 0.47 inches (32.0 x 20.0 x 12.0 mm)		
MTBF	> 1 000 000 hrs (MIL-HDBK -217F, t=+25oC) / Full Load			

NOTE: All specifications in this datasheet are measured at an ambient temperature of 25°C, humidity<75%, nominal input voltage and at rated output load unless otherwise specified.

Safety Specifications		
Parameters		
Standards	Designed to meet UL/EN/IEC 62368-1 (1500 & 3000VDC models) Designed to meet EN/IEC 62368-1, EN60601 (6000VDC models)	
	EMC - Conducted and radiated emission	CISPR32/EN55032, CLASS B with EMC recommended circuit
	Electrostatic Discharge Immunity	IEC/EN 61000-4-2
	RF, Electromagnetic Field Immunity	IEC/EN 61000-4-3
	Electrical Fast Transient/Burst Immunity	IEC/EN 61000-4-4
	Surge Immunity	IEC/EN 61000-4-5
	RF, Conducted Disturbance Immunity	IEC/EN 61000-4-6

Derating

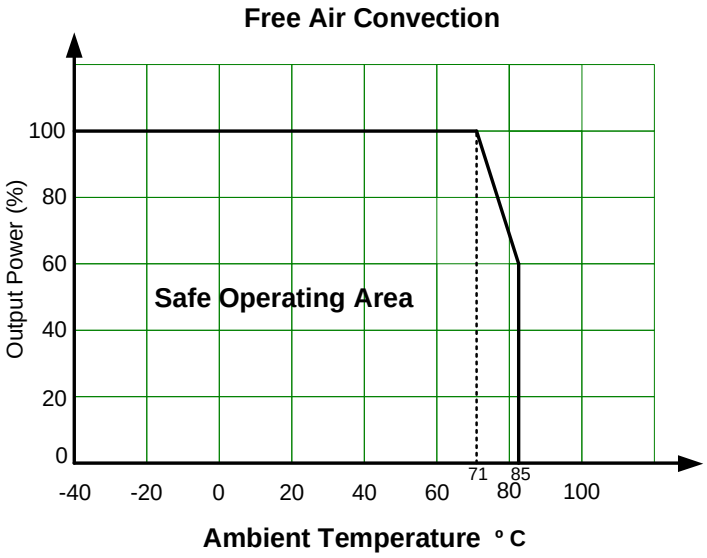

Typical Application Circuit

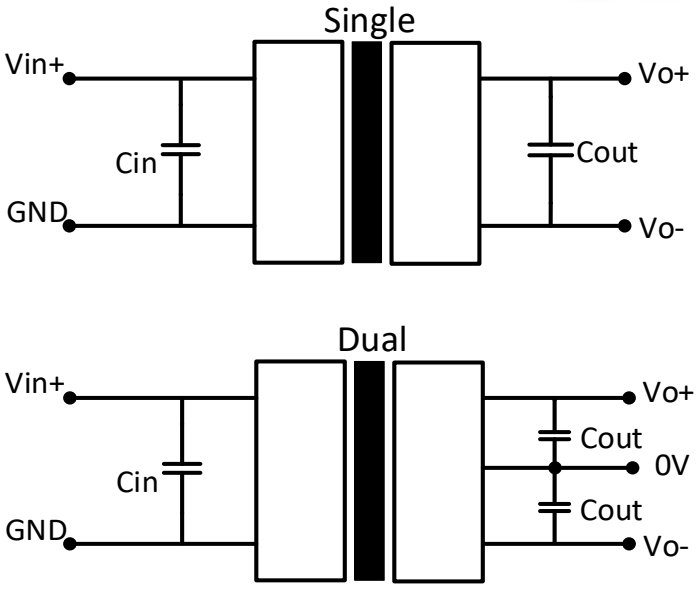

Vin	Cin
24VDC	220µF/50V
48VDC	10-47µF/100V

Single Vout	Cout
3.3VDC	10µF/50V
5VDC	
6VDC	
9VDC	
12VDC	
15VDC	
18VDC	
24VDC	

Dual Vout	Cout
±5VDC	±10µF/50V
±9VDC	
±12VDC	
±15VDC	
±24VDC	

EMC Recommended Circuit

1500VDC & 3000VDC models

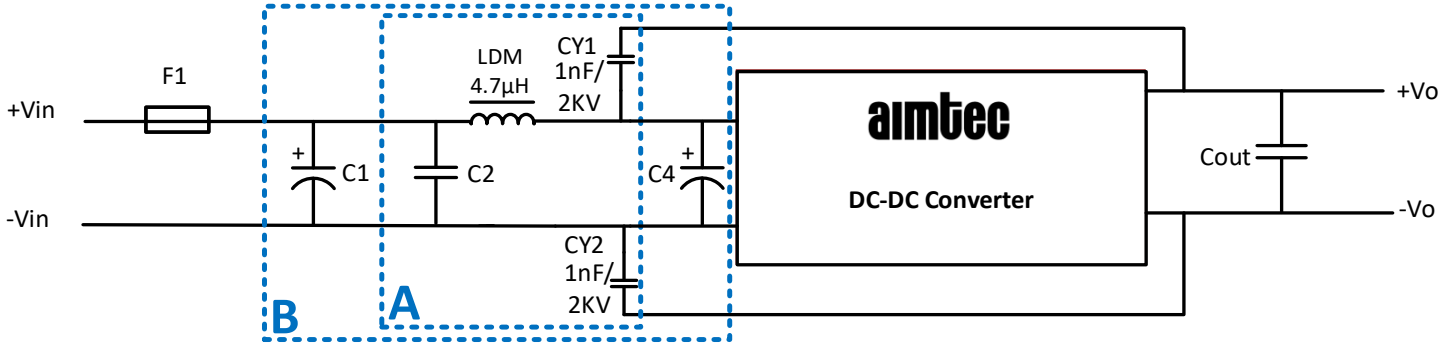

Vin	C1, C4	C2
24VDC	330µF/50V	1µF/50V
48VDC	330µF/100V	1µF/100V
Fuse chose according to actual input current		

6000VDC models

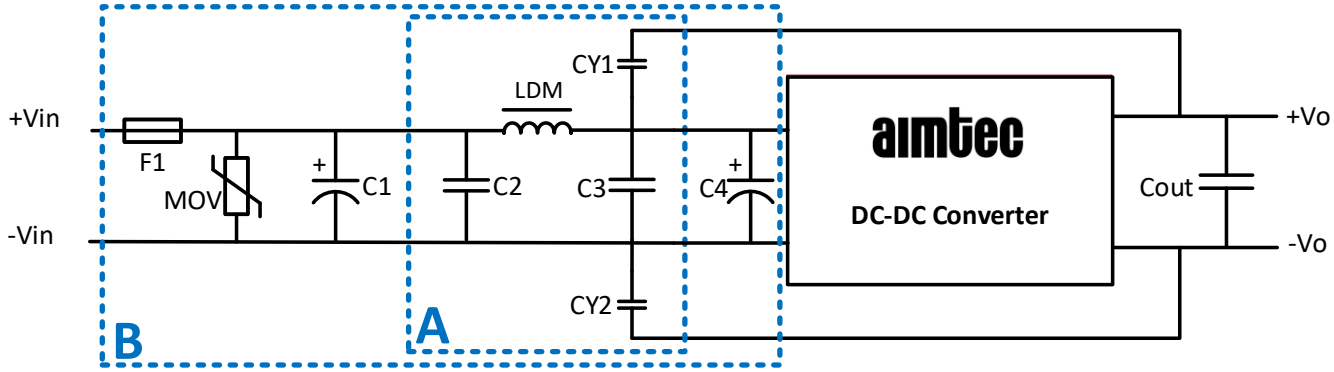

Vin	MOV	C1, C4	C2, C3	LDM	CY1, CY2
24VDC	S20K30	330µF/50V	1µF/50V	10µH	1nF/6KV
48VDC	S14K60	330µF/100V	-	-	-
Fuse chose according to actual input current					

Dimensions

1500VDC models:

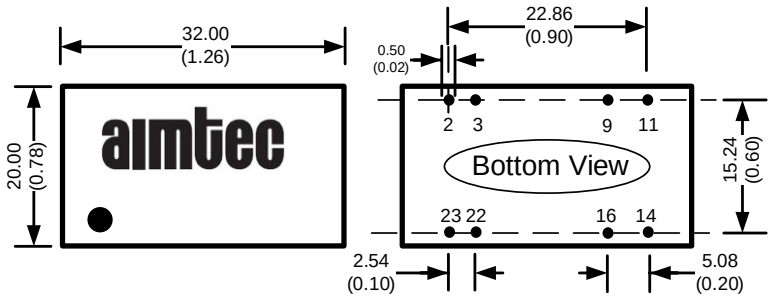

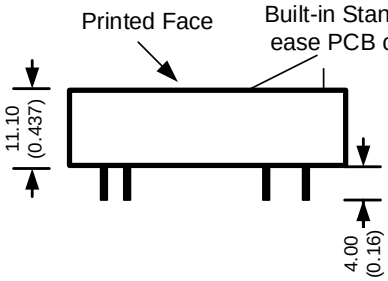

All dimensions are typical: millimeters (inches)
Pin Diameter: 0.50 ± 0.10 (0.02 ± 0.004)
Pin Pitch Tolerance: ± 0.35 (±0.014)
Case Tolerence: ± 0.5 (±0.02)

Pin Out Specifications 1500VDC & 3000VDC models		
Pin	Single output	Dual output
2	-V Input	-V Input
3	-V Input	-V Input
9	No Pin	COM
11	N.C.	-V Output
14	+V Output	+V Output
16	-V Output	Common
22	+V Input	+V Input
23	+V Input	+V Input

3000VDC models:

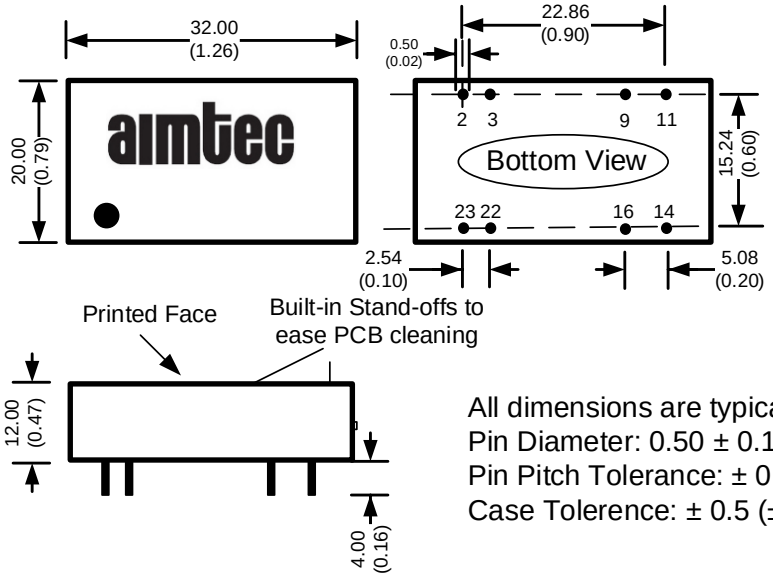

All dimensions are typical: millimeters (inches)
Pin Diameter: 0.50 ± 0.10 (0.02 ± 0.004)
Pin Pitch Tolerance: ± 0.35 (±0.014)
Case Tolerence: ± 0.5 (±0.02)

6000VDC models:

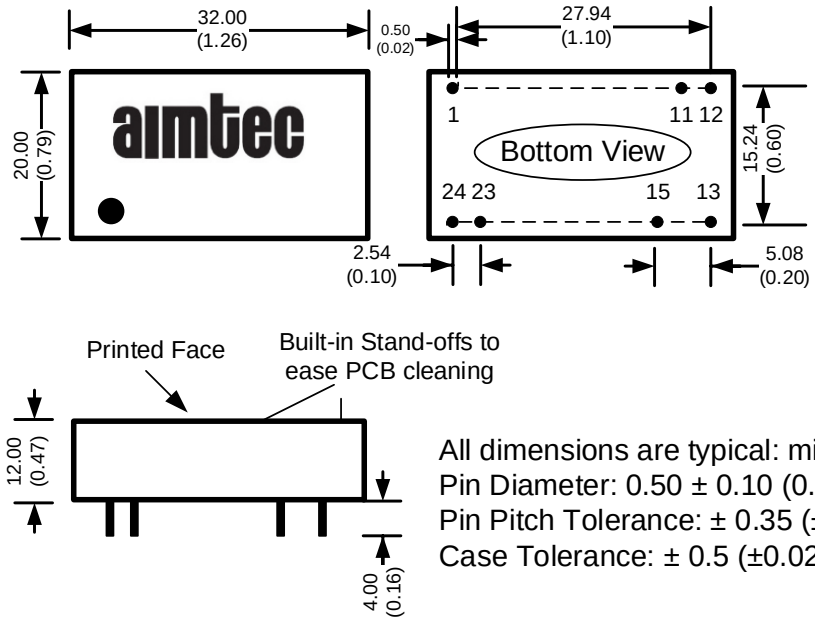

All dimensions are typical: millimeters (inches)
Pin Diameter: 0.50 ± 0.10 (0.02 ± 0.004)
Pin Pitch Tolerance: ± 0.35 (±0.014)
Case Tolerance: ± 0.5 (±0.02)

Pin Out Specifications 6000VDC models	
Pin	**Single output**
1	+V Input
11	No Pin
12	-V Output
13	+V Output
15	No Pin
23	-V Input
24	-V Input

NOTE: 1. Datasheets are updated as needed and as such, specifications are subject to change without notice. Once printed or downloaded, datasheets are no longer controlled by Aimtec; refer to www.aimtec.com for the most current product specifications. **2.** Product labels shown, including safety agency certifications on labels, may vary based on the date manufactured. **3.** Mechanical drawings and specifications are for reference only. **4.** All specifications are measured at an ambient temperature of 25°C, humidity<75%, nominal input voltage and at rated output load unless otherwise specified. **5.** Aimtec may not have conducted destructive testing or chemical analysis on all internal components and chemicals at the time of publishing this document. CAS numbers and other limited information are considered proprietary and may not be available for release. **6.** This product is not designed for use in critical life support systems, equipment used in hazardous environments, nuclear control systems or other such applications which necessitate specific safety and regulatory standards other the ones listed in this datasheet. **7.** Warranty is in accordance with Aimtec's standard Terms of Sale available at www.aimtec.com.