aimtec
Your Power Partner

Series AM6TW-RZ
6 Watt | DC-DC Converter



FEATURES:

- RoHS compliant
- 24 Pin DIP Package
- Wide 4:1 input range
- High efficiency up to 85%
- Operating temperature -40 to + 85°C
- Input / Output Isolation 1500VDC
- Pin compatible with multiple manufacturers
- Continuous short circuit protection

RoHS CE

Models
Single output

Model	Input Voltage (V)	Output Voltage (V)	Output Current max (mA)	Isolation (VDC)	Max Capacitive Load(uF)	Efficiency (%)
AM6TW-2403S-RZ	9-36	3.3	1400	1500	1000	76
AM6TW-2405S-RZ	9-36	5	1200	1500	1000	80
AM6TW-2407S-RZ	9-36	7.2	833	1500	330	82
AM6TW-2409S-RZ	9-36	9	666	1500	220	83
AM6TW-2412S-RZ	9-36	12	500	1500	220	83
AM6TW-2415S-RZ	9-36	15	400	1500	220	83
AM6TW-2418S-RZ	9-36	18	333	1500	47	82
AM6TW-2424S-RZ	9-36	24	250	1500	47	82
AM6TW-4803S-RZ	18-72	3.3	1400	1500	1000	76
AM6TW-4805S-RZ	18-72	5	1200	1500	1000	80
AM6TW-4807S-RZ	18-72	7.2	833	1500	470	80
AM6TW-4809S-RZ	18-72	9	666	1500	470	82
AM6TW-4812S-RZ	18-72	12	500	1500	470	83
AM6TW-4815S-RZ	18-72	15	400	1500	100	84
AM6TW-4818S-RZ	18-72	18	333	1500	10	83
AM6TW-4824S-RZ	18-72	24	250	1500	10	83

Models
Dual output

Model	Input Voltage (V)	Output Voltage (V)	Output Current max (mA)	Isolation (VDC)	Max Capacitive Load(uF)	Efficiency (%)
AM6TW-2403D-RZ	9-36	±3.3	±909	1500	±470	74
AM6TW-2405D-RZ	9-36	±5	±600	1500	±470	80
AM6TW-2407D-RZ	9-36	±7.2	±416	1500	±470	82
AM6TW-2409D-RZ	9-36	±9	±333	1500	±470	81
AM6TW-2412D-RZ	9-36	±12	±250	1500	±330	83
AM6TW-2415D-RZ	9-36	±15	±200	1500	±100	82
AM6TW-2418D-RZ	9-36	±18	±166	1500	±10	82
AM6TW-2424D-RZ	9-36	±24	±125	1500	±10	81
AM6TW-4803D-RZ	18-72	±3.3	±909	1500	±330	77
AM6TW-4805D-RZ	18-72	±5	±600	1500	±330	79
AM6TW-4807D-RZ	18-72	±7.2	±416	1500	±220	80
AM6TW-4809D-RZ	18-72	±9	±333	1500	±220	82
AM6TW-4812D-RZ	18-72	±12	±250	1500	±220	82
AM6TW-4815D-RZ	18-72	±15	±200	1500	±47	84
AM6TW-4818D-RZ	18-72	±18	±166	1500	±22	80
AM6TW-4824D-RZ	18-72	±24	±125	1500	±22	81

Input Specifications

Parameters	Nominal	Typical	Maximum	Units
Voltage range	24 48	9-36 18-72		VDC
Filter	π (Pi) Network			
Input Reflected ripple current *		35		mA p-p

Input Specifications (continued)

Parameters	Nominal	Typical	Maximum	Units
Absolute Maximum Rating	24 Vin 48 Vin	-0.7-40 -0.7-80		VDC
Peak Input Voltage time		100		ms

* The input reflected ripple current should be measured with connected 12µH inductor and a 47µF capacitor.

Isolation Specifications

Parameters	Conditions	Typical	Rated	Units
Tested I/O voltage	60 sec		1500	VDC
Tested case/Input & Output	60 sec		1000	VDC
Resistance		> 1000		MOhm
Capacitance		500		pF

Output Specifications

Parameters	Conditions	Typical	Maximum	Units
Voltage accuracy		±1		%
Short Circuit protection	Continuous			
Short circuit restart	Auto Recovery			
Line voltage regulation		±0.5		%
Load voltage regulation	3.3/±3.3Vout models	±1.5		%
	Other models	±0.5		%
Temperature coefficient		±0.02		%/°C
Ripple & Noise*	At 20MHz Bandwidth	60		mV p-p

* Measured with a 1µF CC.

General Specifications

Parameters	Conditions	Typical	Maximum	Units
Switching frequency	100% load	266		KHz
Operating temperature	Full Load without Derating	-40 to +85		°C
Storage temperature		-40 to +125		°C
Max Case temperature			+100	°C
Cooling	Free air convection			
Humidity			95	%
Case material	Nickel coated copper			
Weight		17		g
Dimensions (L x W x H)	Tolerance ±0.5 mm or ±0.02 inches	1.25 x 0.8 x 0.4inches (31.75 x 20.32 x 10.16mm)		
MTBF	>1 121 000 hrs (MIL-HDBK -217F, Ground Benign, t=+25°C)			

NOTE: All specifications in this datasheet are measured at an ambient temperature of 25°C, humidity<75%, nominal input voltage and at rated output load unless otherwise specified.

Safety Specifications

Parameters	
Agency Approval	CE
Standards	Designed to meet IEC/EN/UL60950-1, 62368-1
	EN55032 Class A with recommended circuit
	IEC61000-4-2, Perf. Criteria A
	IEC61000-4-3, Perf. Criteria A
	IEC61000-4-4, Perf. Criteria A
	IEC61000-4-5, Perf. Criteria A (external 220uF/100V cap required)
	IEC61000-4-6, Perf. Criteria A
	IEC61000-4-8, Perf. Criteria A

Recommended Circuits

Surge

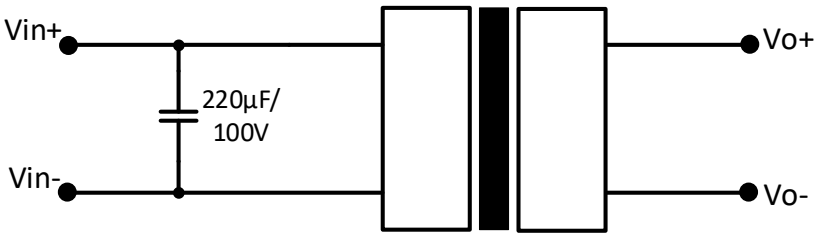

EMI

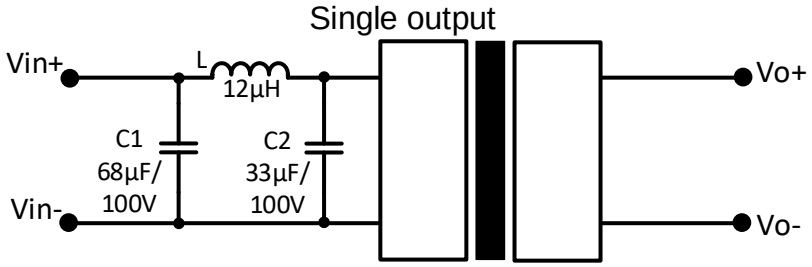

Pin Out Specifications

Pin	Single	Dual
2	-V Input	-V Input
3	-V Input	-V Input
9	No pin	Common
11	N.C.	-V Output
14	+V Output	+V Output
16	-V Output	Common
22	+V Input	+V Input
23	+V Input	+V Input

Dimensions

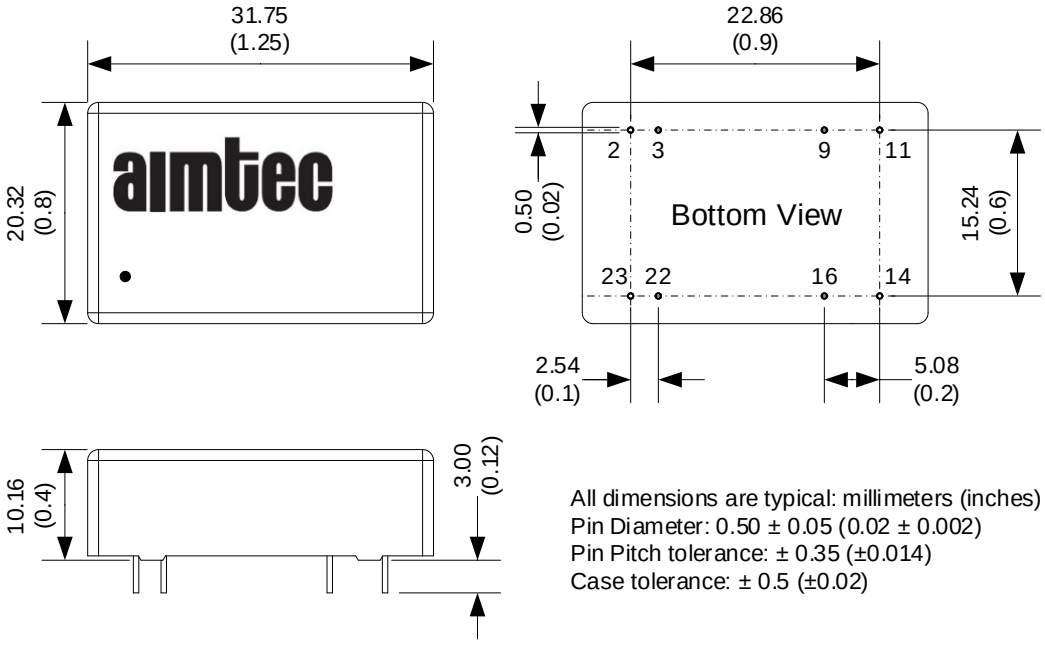

All dimensions are typical: millimeters (inches)
Pin Diameter: 0.50 ± 0.05 (0.02 ± 0.002)
Pin Pitch tolerance: ± 0.35 (±0.014)
Case tolerance: ± 0.5 (±0.02)

NOTE: 1. Datasheets are updated as needed and as such, specifications are subject to change without notice. Once printed or downloaded, datasheets are no longer controlled by Aimtec; refer to www.aimtec.com for the most current product specifications. **2.** Product labels shown, including safety agency certifications on labels, may vary based on the date manufactured. **3.** Mechanical drawings and specifications are for reference only. **4.** All specifications are measured at an ambient temperature of 25°C, humidity<75%, nominal input voltage and at rated output load unless otherwise specified. **5.** Aimtec may not have conducted destructive testing or chemical analysis on all internal components and chemicals at the time of publishing this document. CAS numbers and other limited information are considered proprietary and may not be available for release. **6.** This product is not designed for use in critical life support systems, equipment used in hazardous environments, nuclear control systems or other such applications which necessitate specific safety and regulatory standards other the ones listed in this datasheet. **7.** Warranty is in accordance with Aimtec's standard Terms of Sale available at www.aimtec.com.