aimtec
Your Power Partner

# Series AM8T-Z

## 8 Watt | DC-DC Converter




### FEATURES:

- Wide 2:1 input range
- 24 Pin DIP Package
- Over current protection
- Efficiency up to 86%
- Operating temperature -40ºC to + 85ºC
- Continuous Short Circuit Protection
- Low ripple and noise
- Input/output Isolation voltage 1500VDC

## Models
## Single output

| Model | Input Voltage (V) | Input current NL \| FL (mA) | Output Voltage (V) | Output Current max (mA) | Capacitive load (µF) | Efficiency (%) |
|---|---|---|---|---|---|---|
| AM8T-1203SZ | 9-18 | 20 \| 687 | 3.3 | 2000 | 3300 | 80 |
| AM8T-1205SZ | 9-18 | 20 \| 762 | 5 | 1500 | 2200 | 82 |
| AM8T-1207SZ | 9-18 | 20 \| 803 | 7.2 | 1111 | 1000 | 83 |
| AM8T-1209SZ | 9-18 | 20 \| 794 | 9 | 888 | 470 | 84 |
| AM8T-1212SZ | 9-18 | 20 \| 784 | 12 | 665 | 470 | 85 |
| AM8T-1215SZ | 9-18 | 20 \| 803 | 15 | 535 | 220 | 83 |
| AM8T-2403SZ | 18-36 | 15 \| 344 | 3.3 | 2000 | 3300 | 80 |
| AM8T-2405SZ | 18-36 | 15 \| 381 | 5 | 1500 | 2200 | 82 |
| AM8T-2407SZ | 18-36 | 15 \| 396 | 7.2 | 1111 | 1000 | 84 |
| AM8T-2409SZ | 18-36 | 15 \| 387 | 9 | 888 | 470 | 86 |
| AM8T-2412SZ | 18-36 | 15 \| 392 | 12 | 665 | 470 | 85 |
| AM8T-2415SZ | 18-36 | 15 \| 397 | 15 | 535 | 220 | 84 |
| AM8T-4803SZ | 36-72 | 15 \| 172 | 3.3 | 2000 | 3300 | 80 |
| AM8T-4805SZ | 36-72 | 15 \| 191 | 5 | 1500 | 2200 | 82 |
| AM8T-4807SZ | 36-72 | 15 \| 198 | 7.2 | 1111 | 1000 | 84 |
| AM8T-4809SZ | 36-72 | 15 \| 198 | 9 | 888 | 470 | 84 |
| AM8T-4812SZ | 36-72 | 15 \| 198 | 12 | 665 | 470 | 84 |
| AM8T-4815SZ | 36-72 | 15 \| 198 | 15 | 535 | 220 | 84 |

## Models
## Dual output

| Model | Input Voltage (V) | Input current NL \| FL (mA) | Output Voltage (V) | Output Current max (mA) | Capacitive load (µF) | Efficiency (%) |
|---|---|---|---|---|---|---|
| AM8T-1205DZ | 9-18 | 20 \| 813 | ±5 | ±800 | ±1000 | 82 |
| AM8T-1207DZ | 9-18 | 20 \| 803 | ±7.2 | ±555 | ±470 | 83 |
| AM8T-1209DZ | 9-18 | 20 \| 794 | ±9 | ±444 | ±330 | 84 |
| AM8T-1212DZ | 9-18 | 20 \| 794 | ±12 | ±335 | ±220 | 84 |
| AM8T-1215DZ | 9-18 | 20 \| 794 | ±15 | ±265 | ±100 | 84 |
| AM8T-2405DZ | 18-36 | 15 \| 407 | ±5 | ±800 | ±1000 | 82 |
| AM8T-2407DZ | 18-36 | 15 \| 396 | ±7.2 | ±555 | ±470 | 84 |
| AM8T-2409DZ | 18-36 | 15 \| 392 | ±9 | ±444 | ±330 | 85 |
| AM8T-2412DZ | 18-36 | 15 \| 402 | ±12 | ±335 | ±220 | 83 |
| AM8T-2415DZ | 18-36 | 15 \| 392 | ±15 | ±265 | ±100 | 85 |
| AM8T-4805DZ | 36-72 | 15 \| 203 | ±5 | ±800 | ±1000 | 82 |
| AM8T-4807DZ | 36-72 | 15 \| 198 | ±7.2 | ±555 | ±1000 | 84 |
| AM8T-4809DZ | 36-72 | 15 \| 198 | ±9 | ±444 | ±680 | 84 |
| AM8T-4812DZ | 36-72 | 15 \| 196 | ±12 | ±335 | ±220 | 85 |
| AM8T-4815DZ | 36-72 | 15 \| 196 | ±15 | ±265 | ±100 | 85 |

## Input Specifications

| Parameters | Nominal | Typical | Maximum | Units |
|---|---|---|---|---|
| Voltage range | 12 | 9-18 | | VDC |
| | 24 | 18-36 | | VDC |
| | 48 | 36-72 | | VDC |
| Filter | π (Pi) Network | | | |
| Absolute Maximum Rating | 12 Vin | -0.7-25 | | VDC |
| | 24 Vin | -0.7-50 | | VDC |
| | 48 Vin | -0.7-100 | | VDC |
| Peak Input Voltage time | | 100 | | ms |
| Input Reflected ripple current * | | 35 | | mA p-p |

* The input reflected ripple current should be measured with connected 12µH inductor.

## Isolation Specifications

| Parameters | Conditions | Typical | Rated | Units |
|---|---|---|---|---|
| Tested I/O voltage | 60 sec | | 1500 | VDC |
| Case/input & Output | 60 sec | 1000 | | VDC |
| Resistance | | > 1000 | | MOhm |
| Capacitance | | 1000 | | pF |

## Output Specifications

| Parameters | Conditions | Typical | Maximum | Units |
|---|---|---|---|---|
| Voltage accuracy | | ±1 | | % |
| Cross Regulation | Dual output, 1 load: 25 to 100%, other: 100% load | ±5 | | % |
| Short Circuit protection | Continuous, hiccup | | | |
| Short Circuit restart | Auto recovery | | | |
| Over Current Protection | 150 % of Iout max | | | |
| Line voltage regulation | HL-LL | ±0.5 | | % |
| Load voltage regulation | 0% to 100% load, 3.3Vout | ±1.5 | | % |
| | 0% to 100% load, Dual output | ±1 | | % |
| | 0% to 100% load, Single output | ±0.5 | | % |
| Temperature coefficient | | ±0.02 | | %/°C |
| Ripple and Noise * | | 75 | | mVp-p |

* Measured with 1µF CC.

## General Specifications

| Parameters | Conditions | Typical | Maximum | Units |
|---|---|---|---|---|
| Switching frequency | 100% load | 330 | | KHz |
| Operating temperature | With Derating above 60°C | -40 to +85 | | °C |
| Storage temperature | | -40 to +125 | | °C |
| Max Case temperature | | | +100 | °C |
| Derating | 60 to 85°C | 2.5 | | %/°C |
| Cooling | Free air convection | | | |
| Humidity | | | 95 | % |
| Case material | Nickel coated cooper | | | |
| Weight | | 17 | | g |
| Dimensions (L x H x W) | 1.25 x 0.80 x 0.40 inches 31.75 x 20.32 x 10.16 mm | | | |
| MTBF | >910 000 hrs (MIL-HDBK -217F, Ground Benign, t=+25°C) | | | |

NOTE: All specifications in this datasheet are measured at an ambient temperature of 25°C, humidity<75%, nominal input voltage and at rated output load unless otherwise specified.

## Safety Specifications

| Parameters | |
|---|---|
| Agency Approval | UL, CE |
| Standards | EN55032 Class A, with recommended circuit |
| | IEC61000-4-2, Perf. Criteria A |
| | IEC61000-4-3, Perf. Criteria A |
| | IEC61000-4-4, Perf. Criteria A (external 220uF/100V cap required) |
| | IEC61000-4-5, Perf. Criteria A (external 220uF/100V cap required) |
| | IEC61000-4-6, Perf. Criteria A |
| | IEC61000-4-8, Perf. Criteria A |
| | IEC/EN/UL 60950-1:2001 & IEC/EN/UL 62368-1 |

## Pin Out Specifications

| Pin | Single | Dual |
|---|---|---|
| 2 | -V Input | -V Input |
| 3 | -V Input | -V Input |
| 9 | No pin | Common |
| 11 | N.C. | -V Output |
| 14 | +V Output | + V Output |
| 16 | -V Output | Common |
| 22 | +V Input | +V Input |
| 23 | +V Input | +V Input |

## Dimensions

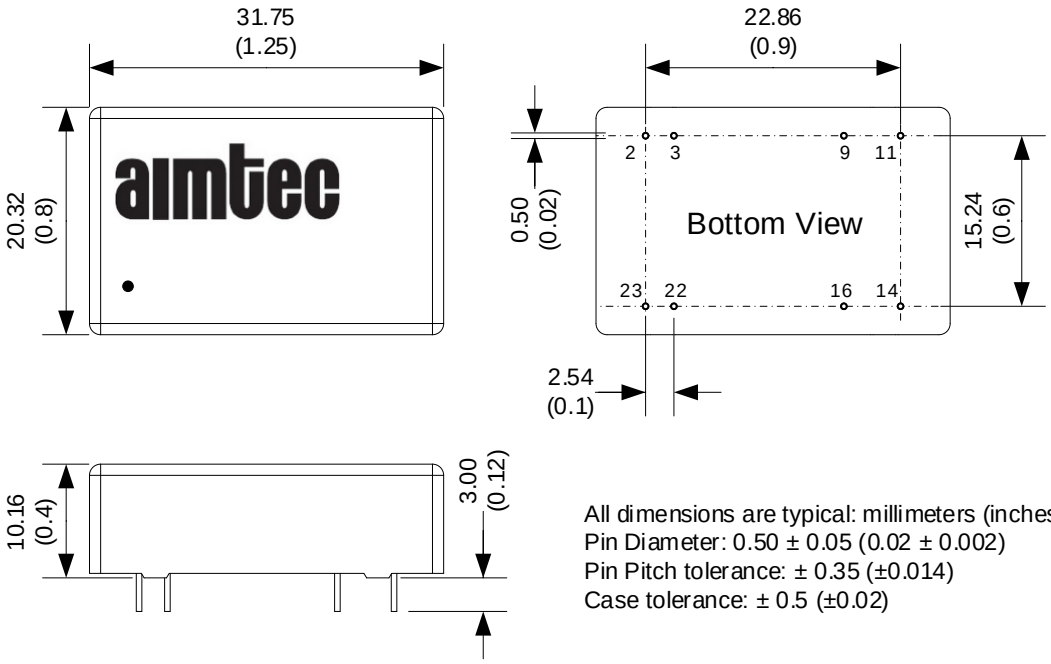


All dimensions are typical: millimeters (inches)
Pin Diameter: 0.50 ± 0.05 (0.02 ± 0.002)
Pin Pitch tolerance: ± 0.35 (±0.014)
Case tolerance: ± 0.5 (±0.02)

## Derating

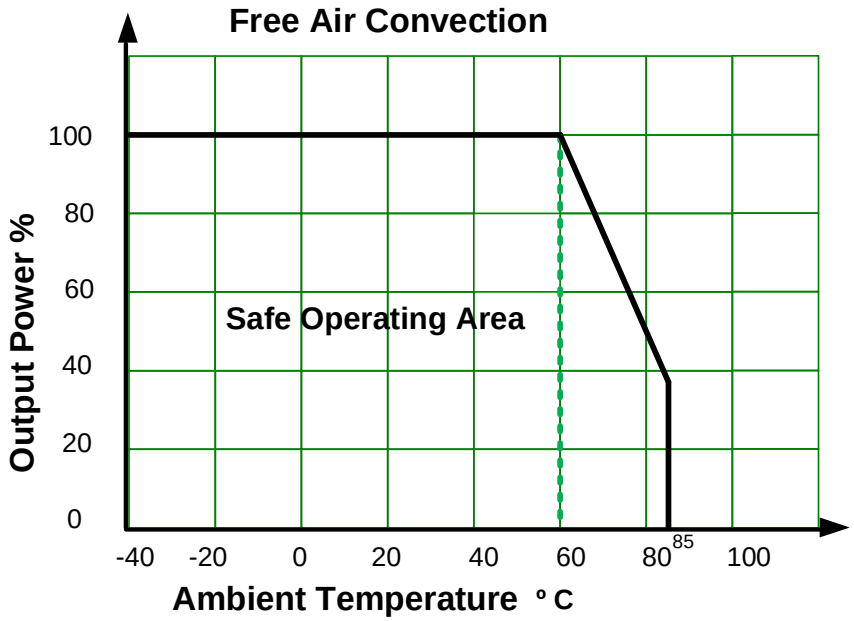

## Recommended Circuits

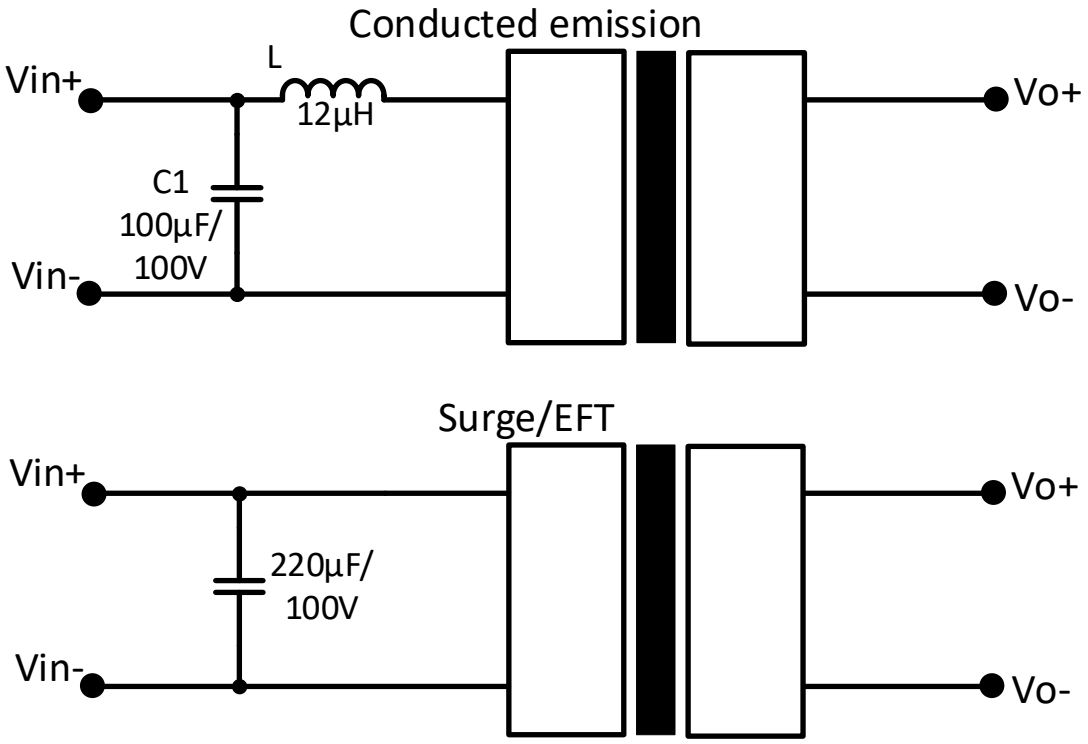


**NOTE: 1.** Datasheets are updated as needed and as such, specifications are subject to change without notice. Once printed or downloaded, datasheets are no longer controlled by Aimtec; refer to www.aimtec.com for the most current product specifications. **2.** Product labels shown, including safety agency certifications on labels, may vary based on the date manufactured. **3.** Mechanical drawings and specifications are for reference only. **4.** All specifications are measured at an ambient temperature of 25°C, humidity<75%, nominal input voltage and at rated output load unless otherwise specified. **5.** Aimtec may not have conducted destructive testing or chemical analysis on all internal components and chemicals at the time of publishing this document. CAS numbers and other limited information are considered proprietary and may not be available for release. **6.** This product is not designed for use in critical life support systems, equipment used in hazardous environments, nuclear control systems or other such applications which necessitate specific safety and regulatory standards other the ones listed in this datasheet. **7.** Warranty is in accordance with Aimtec's standard Terms of Sale available at www.aimtec.com.