aimtec
Your Power Partner

Series AM9GH-Z

9 Watt | DC-DC Converter



FEATURES:

- SIP8 Metal Case Package
- High Efficiency up to 89%
- On / Off Control
- Input Under Voltage Lockout
- For Industrial Applications
- Operating Temperature -40°C to +85°C
- Continuous Short Circuit Protection
- Input / Output Isolation 1600VDC
- Wide 4:1 Input Range

RoHS

Models
Single Output

Model	Input Voltage (V)	Output Voltage (V)	Output Current Max (mA)	Isolation (VDC)	Input Current Full typ.| No Load max.(mA)		Capacitor Load (µF)	Efficiency (%)
AM9GH-2403SZ	9-36	3.3	2000	1600	335	9	2600	82
AM9GH-2405SZ	9-36	5	1600	1600	392	9	1300	85
AM9GH-2409SZ	9-36	9	1000	1600	426	9	800	88
AM9GH-2412SZ	9-36	12	750	1600	426	9	560	88
AM9GH-2415SZ	9-36	15	600	1600	421	9	560	89
AM9GH-2424SZ	9-36	24	375	1600	421	9	200	89
AM9GH-4803SZ	18-75	3.3	2000	1600	168	5	2600	82
AM9GH-4805SZ	18-75	5	1600	1600	196	5	1300	85
AM9GH-4809SZ	18-75	9	1000	1600	216	5	800	87
AM9GH-4812SZ	18-75	12	750	1600	213	5	560	88
AM9GH-4815SZ	18-75	15	600	1600	211	5	560	89
AM9GH-4824SZ	18-75	24	375	1600	211	5	200	89

Models
Dual output

Model	Input Voltage (V)	Output Voltage (V)	Output Current Max (mA)	Isolation (VDC)	Input Current Full typ.| No Load max.(mA)		Capacitor Load (µF)	Efficiency (%)
AM9GH-2405DZ	9-36	±5	±800	1600	392	9	±800	85
AM9GH-2412DZ	9-36	±12	±375	1600	426	9	±390	88
AM9GH-2415DZ	9-36	±15	±300	1600	426	9	±200	87
AM9GH-4805DZ	18-75	±5	±800	1600	196	5	±800	85
AM9GH-4812DZ	18-75	±12	±375	1600	216	5	±390	87
AM9GH-4815DZ	18-75	±15	±300	1600	216	5	±200	87

NOTE: All specifications in this datasheet are measured at an ambient temperature of 25°C, humidity<75%, nominal input voltage and at rated output load unless otherwise specified

Input Specifications

Parameters	Nominal	Typical	Maximum	Units
Voltage range	24 48	9-36 18-75		VDC
Filter	Capacitor			
Transient recovery time		250		µs
Transient Response deviation	3.3 & 5 V output Others		±5 ±3	%
Startup time		50		ms
Absolute Maximum Rating	24 Vin 48 Vin	-0.7-50 -0.7-100		VDC
Peak Input Voltage Time			100	ms
Input Reflected Ripple Current *			30	mA p-p
On / Off Control	ON – high impedance or open; OFF – 2-4mA input current through 1KΩ (standby 2.5mA max)			
Under Voltage lockout	24 ON/OFF 48 ON/OFF	8.9/7 16/14		VDC

* The input reflected ripple current should be measured with a 12µH inductor and a 47µF input capacitor (ESR<1Ω at 100 KHz)

Isolation Specifications

Parameters	Conditions	Typical	Rated	Units
Tested I/O voltage	60 sec		1600	VDC
Case / Input or Output	60 sec		1000	VDC
Resistance		> 1000		MOhm
Capacitance		50		pF

Output Specifications

Parameters	Conditions	Typical	Maximum	Units
Voltage accuracy			±1	%
Cross Regulation (Dual)	1st output 25% to 100%, 2nd output 100%		±5	%
Short Circuit protection	Continuous			
Short Circuit restart	Auto recovery			
Line voltage regulation	LL~HL		±0.2	%
Load voltage regulation (Single)	0-100% load, 3.3 Vin 0-100% load, others		±1 ±0.5	%
Load voltage regulation (Dual)	0-100% load		±1	%
Temperature coefficient		±0.02		%/°C
Ripple & Noise *	At 20MHz Bandwidth		75	mV p-p
Transient recovery time	100% - 25% load, 25% load step change	250		µs
Transient response deviation	100% - 25% load, 25% load step change, 3.3/5Vout 100% - 25% load, 25% load step change, others		±5 ±3	%

* Measured with a 1µF CC and a 10µF EC.

General Specifications

Parameters	Conditions	Typical	Maximum	Units
Switching frequency	100% load, 24Vin models 100% load, 48Vin models	400 500		KHz
Operating temperature	Refer Derating Curve	-40 to +85		°C
Storage temperature		-55 to +125		°C
Max Case temperature			+100	°C
Cooling	Free air convection			
Humidity			95	%
Case material	Copper			
Potting material	Epoxy (UL94V-0 rated)			
Pin Material	C5191R-H Solder coated			
Weight		7.3		g
Dimensions (L x W x H)	0.86 x 0.38 x 0.44 inch 21.85 x 9.60 x 11.20 mm			
MTBF	>900,000 hrs (MIL-HDBK -217F, Ground Benign, t=+25°C)			
Maximum soldering temperature	1.5mm from case for 10 sec max		260	°C

Safety Specifications

Parameters	
Standards	EN55032 Class A, EN55024 (external class A circuit required)
	IEC61000-4-2, Perf. Criteria B
	IEC61000-4-3, Perf. Criteria A
	IEC61000-4-4, Perf. Criteria A (external EFT/Surge circuit required)
	IEC61000-4-5, Perf. Criteria A (external EFT/Surge circuit required)
	IEC61000-4-6, Perf. Criteria A
	IEC61000-4-8, Perf. Criteria A
	NOTE: designed to meet IEC/EN/UL 60950-1, 62368-1

Pin Out Specifications

Pin	1600 VDC	
	Single	Dual
1	- V Input	- V Input
2	+ V Input	+ V Input
3	On/Off Control	On/Off Control
6	+ V Output	+ V Output
7	- V Output	Common
8	N.C.	- V Output

Dimensions

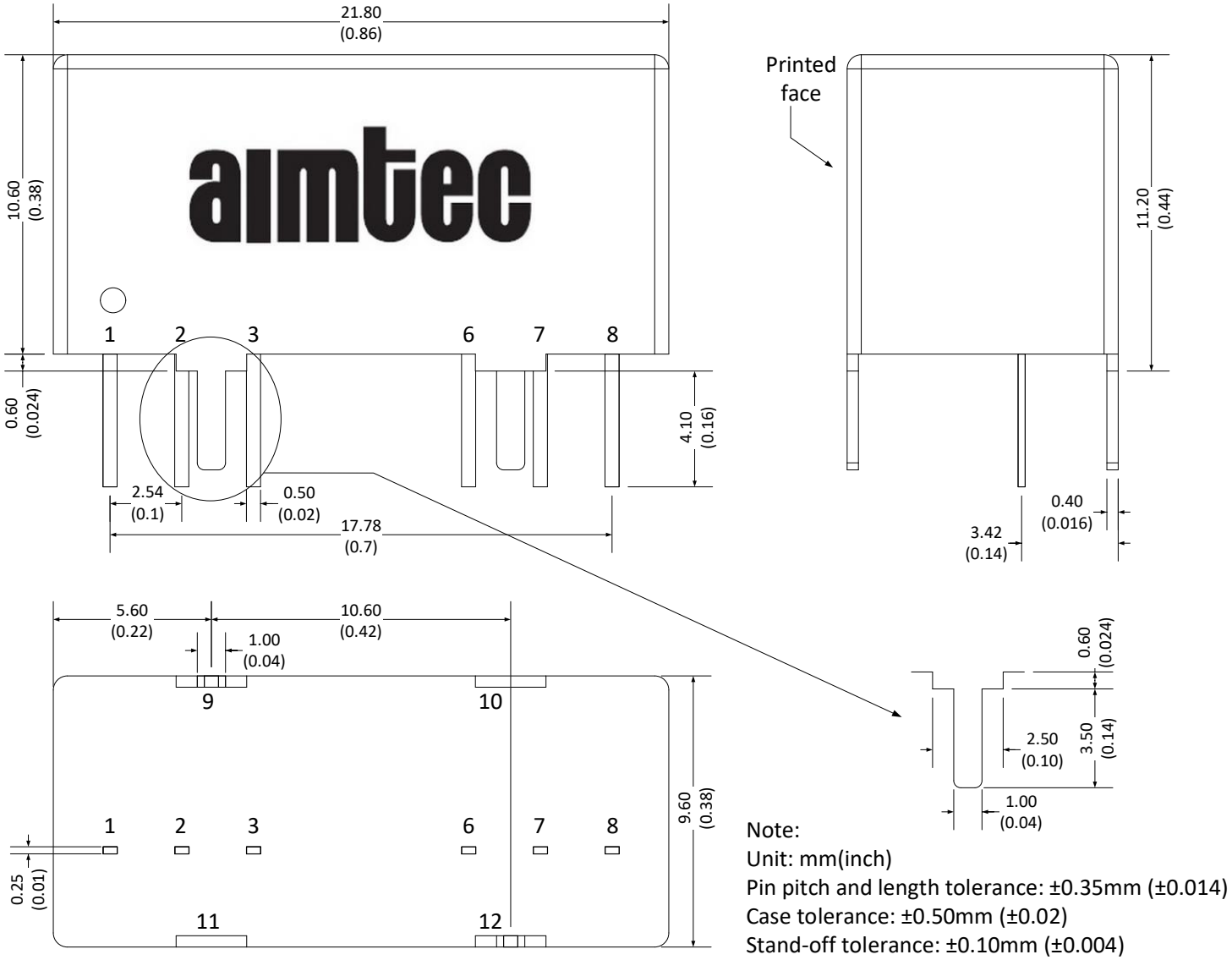

Note:
Unit: mm(inch)
Pin pitch and length tolerance: ±0.35mm (±0.014)
Case tolerance: ±0.50mm (±0.02)
Stand-off tolerance: ±0.10mm (±0.004)

Derating

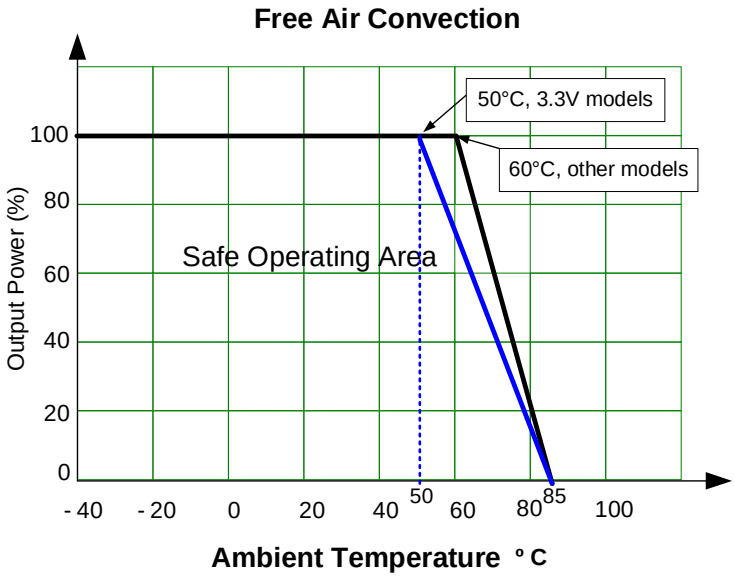

Input Reflected Ripple Test Circuit

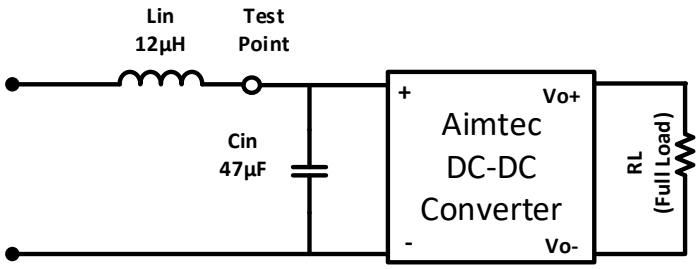

* Tested at full load, and nominal input

Control ON/OFF pin connection example:

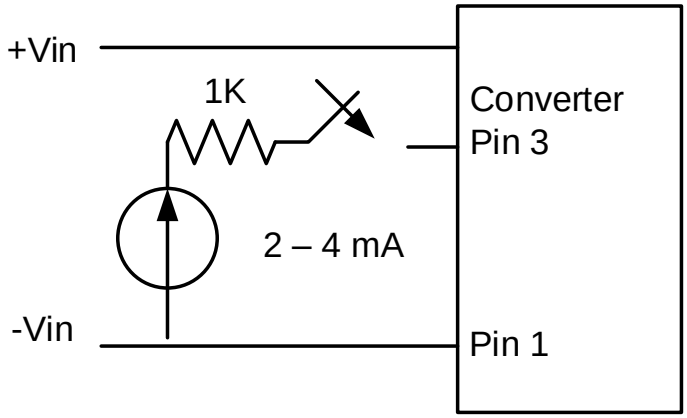

The voltage could be applied trough a limiting resistor. The converter is turned on when the external switching circuit is open.

EFT/Surge Application circuit

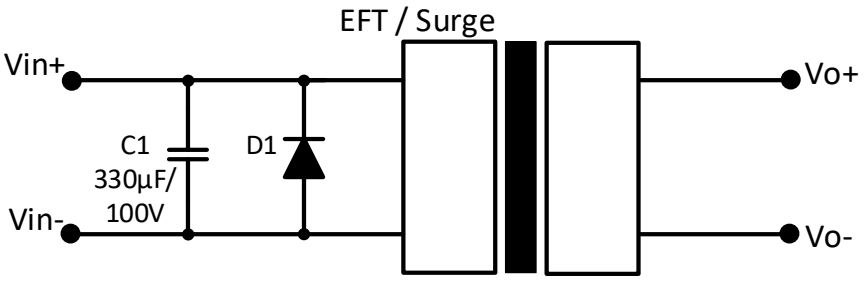

Vin	D1
24VDC	TVS, 3kW, 70V
48VDC	TVS, 3kW, 120V

Class A EMI, external filter

Single output models

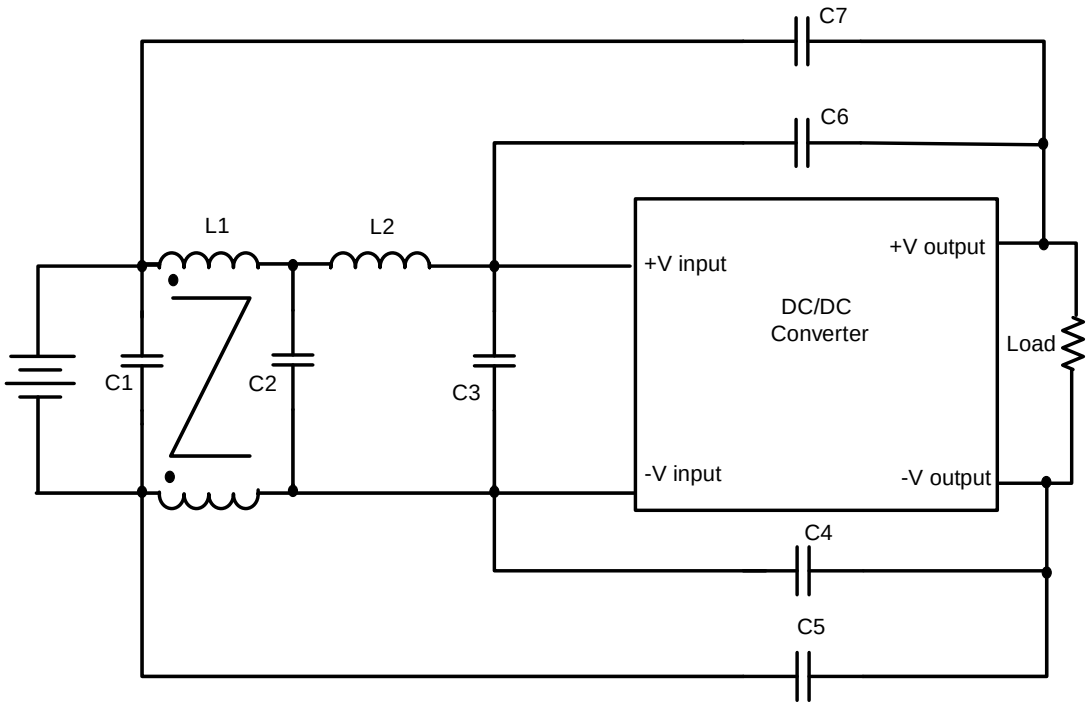

Vin	C1, C2, C3	C4, C5, C6 & C7	L1	L2
24VDC	10µF/35V	220pF/3KV	20µH	20µH
48VDC	4.7µF/100V	1000pF/3KV	132.8µH	10µH

Dual output models 24Vin models

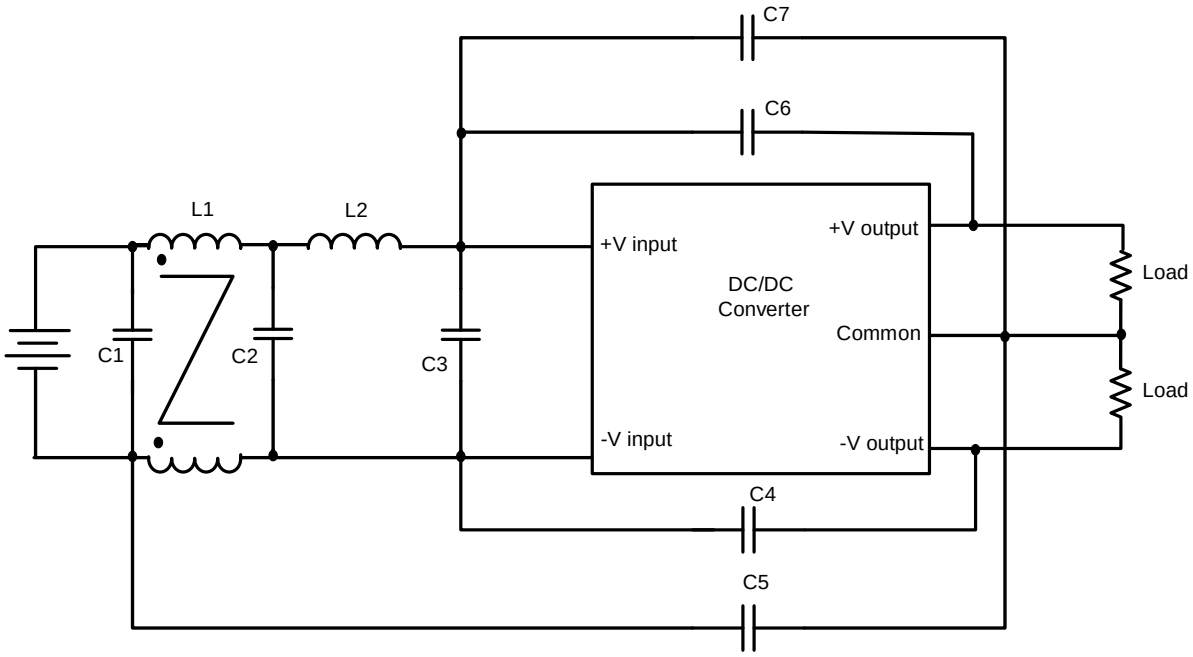

Vin	C1, C2, C3	C4, C5 & C6	L1	L2	C7

24VDC	10µF/35V	220pF/3KV	20µH	20µH	1000pF/3KV

Dual output models 48Vin models

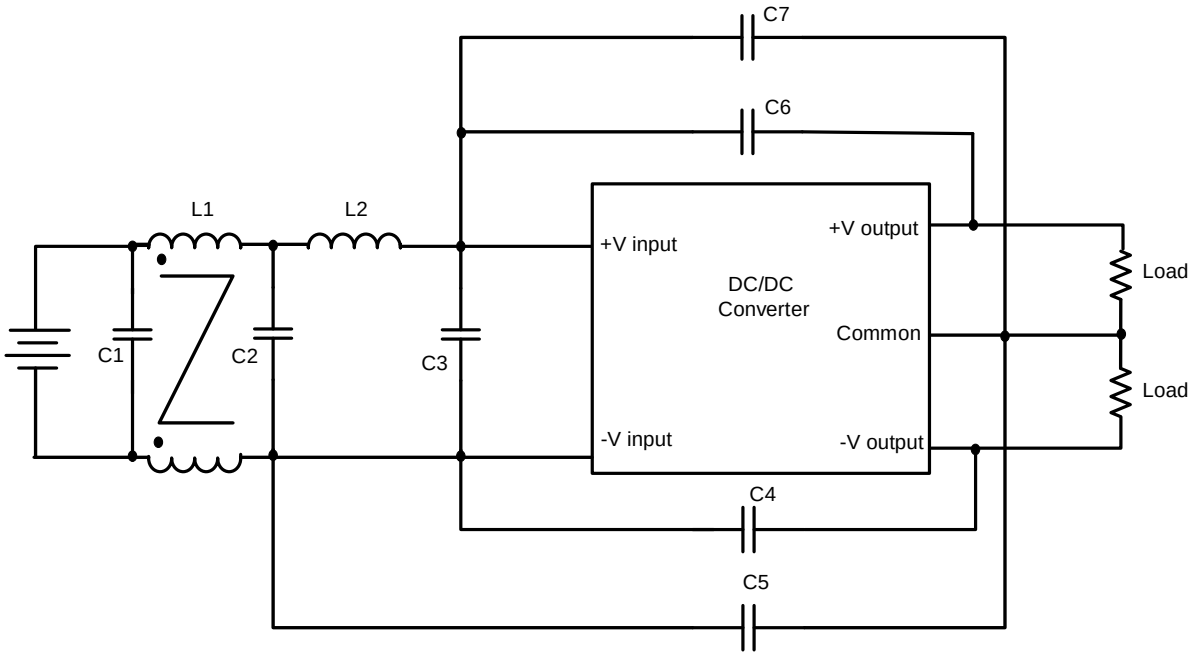

Vin	C1, C2, C3	C4 & C6	L1	L2	C5 & C7
48VDC	4.7µF/100V	1000pF/3KV	132.8µH	10µH	220pF/3KV

NOTE: 1. Datasheets are updated as needed and as such, specifications are subject to change without notice. Once printed or downloaded, datasheets are no longer controlled by Aimtec; refer to www.aimtec.com for the most current product specifications. **2.** Product labels shown, including safety agency certifications on labels, may vary based on the date manufactured. **3.** Mechanical drawings and specifications are for reference only. **4.** All specifications are measured at an ambient temperature of 25°C, humidity<75%, nominal input voltage and at rated output load unless otherwise specified. **5.** Aimtec may not have conducted destructive testing or chemical analysis on all internal components and chemicals at the time of publishing this document. CAS numbers and other limited information are considered proprietary and may not be available for release. **6.** This

product is not designed for use in critical life support systems, equipment used in hazardous environments, nuclear control systems or other such applications which necessitate specific safety and regulatory standards other the ones listed in this datasheet. **7.** Warranty is in accordance with Aimtec's standard Terms of Sale available at www.aimtec.com.