aimtec
Your Power Partner

Series AMSR-78Z

Up to 7.5Watt | DC-DC Switching Regulator



FEATURES:

- RoHS Compliant
- 3 Pin SIP Package
- Non-Isolated
- Low ripple and noise
- Operating temperature -40°C to +85
- Very high efficiency up to 97%
- Pin compatible to multiple manufacturers

CE RoHS

Models
Single output

Model	Input Voltage (V)	Output Voltage (V)	Output Current max (mA)	Maximum Capacitive load (µF)	Efficiency Vin Min (%)	Efficiency Vin Max (%)
AMSR-781.5Z	4.75-30	1.5	500	220	78	65
AMSR-781.8Z	4.75-34	1.8	500	220	82	70
AMSR-782.5Z	4.75-34	2.5	500	220	87	76
AMSR-783.3Z	4.75-34	3.3	500	220	91	81
AMSR-7805Z	6.5-34	5	500	220	94	85
AMSR-786.5Z	8-34	6.5	500	220	95	88
AMSR-787.2Z	9-34	7.2	500	220	95	89
AMSR-7809Z	11-34	9	500	220	96	92
AMSR-7812Z	15-34	12	500	220	97	94
AMSR-7815Z	18-34	15	500	220	97	95

Input Specifications

Parameters	Nominal	Typical	Maximum	Units
Voltage range	See the table above			
Filter	Capacitor			
No load Input Current			8	mA
Input Reflected Ripple Current *		35		mA p-p
Absolute Maximum Stress rating			-0.3-34	VDC

* The input reflected ripple current should be measured with a 12µH inductor.

Output Specifications

Parameters	Conditions	Typical	Maximum	Units
Voltage accuracy			±2	%
Short Circuit protection	Continuous			
Short Circuit restart	Auto recovery			
Line voltage regulation			±0.5	%
Load voltage regulation	10-100% load		±0.6	%
Temperature coefficient		±0.02		%/°C
Ripple & Noise	20MHz Bandwidth, 10-100% load		60	mV p-p

General Specifications

Parameters	Conditions	Typical	Maximum	Units
Switching frequency	100% load	330		KHz
Operating temperature	Without derating	-40 to +85		°C
Storage temperature		-40 to +125		°C
Max Case temperature			100	°C
Cooling	Free air convection			
Humidity			95	%
Case material	Non-conductive black plastic (UL94V-0 rated)			
Weight		2		g
Dimensions (L x W x H)	0.46 x 0.29 x 0.38 inches 11.70 x 7.50 x 9.70 mm			
MTBF	> 4 500 000 hrs (MIL-HDBK-217F, Ground Benign, t=+25 °C)			
Soldering Temperature	1.5 mm from case for 10 sec		260	°C

NOTE: All specifications in this datasheet are measured at an ambient temperature of 25°C, humidity<75%, nominal input voltage and at rated output load unless otherwise specified.

Safety Specifications

Parameters	
Agency Approval	CE
Standards	EN55032, Class B
	IEC61000-4-2, Perf. Criteria A
	IEC61000-4-3, Perf. Criteria A
	IEC61000-4-4, Perf. Criteria A (external 220uF/100V cap required)
	IEC61000-4-6, Perf. Criteria A
	IEC61000-4-8, Perf: Criteria A

Pin Out Specifications

Pin	Single
1	+V Input
2	Ground
3	+V Output

Dimensions

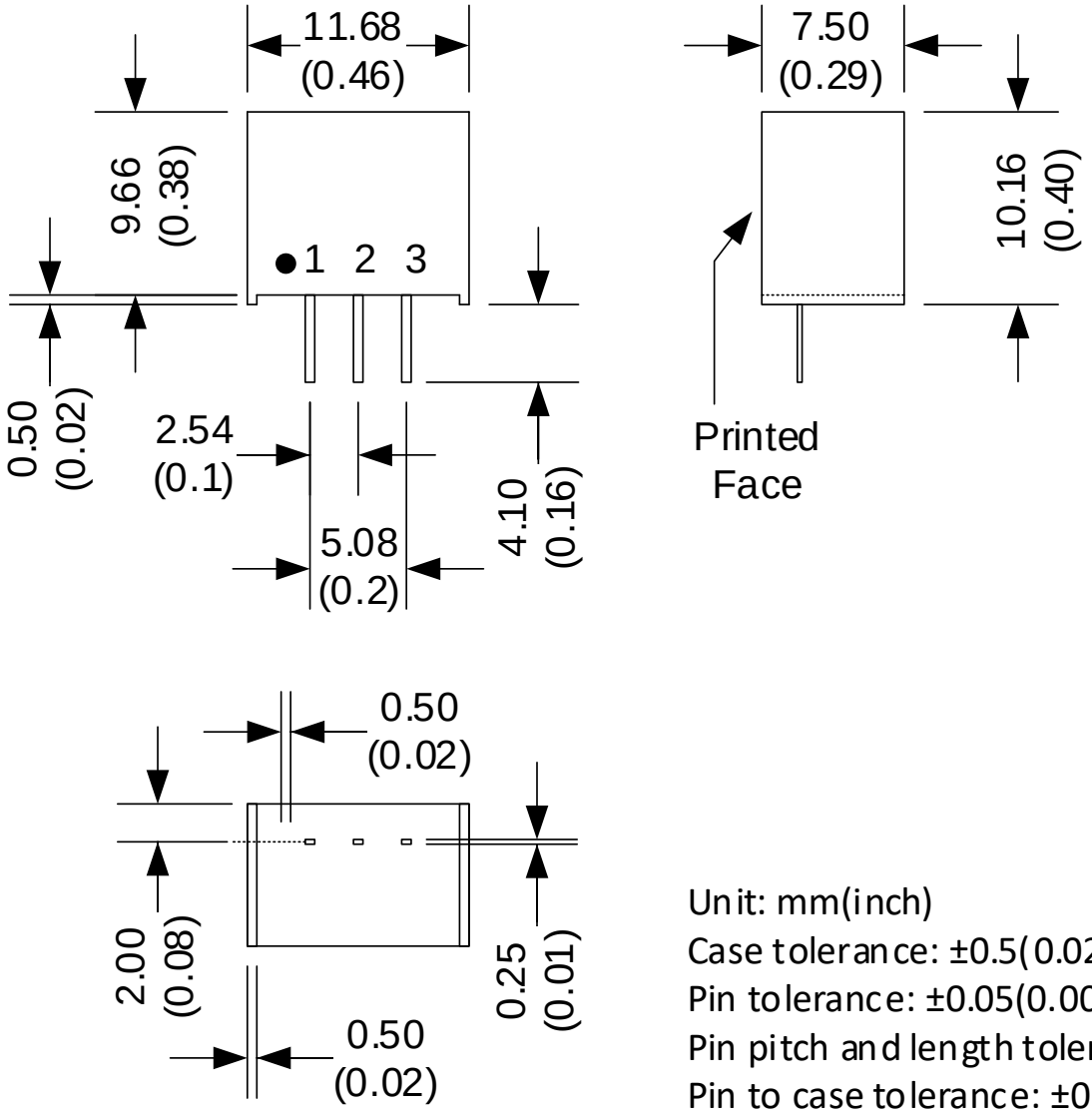

Unit: mm(inch)
Case tolerance: ±0.5(0.02)
Pin tolerance: ±0.05(0.002)
Pin pitch and length tolerance: ±0.35(0.014)
Pin to case tolerance: ±0.5(0.02)

Typical Application Circuit

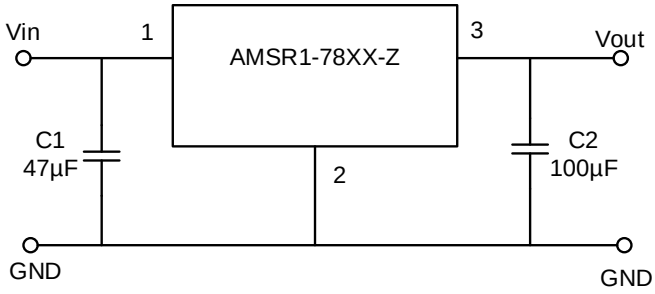

C1: A low ESR capacitor is required to keep the converter to a minimum. Ceramic capacitors are recommended, but tantalum or electrolytic may be used. Typical value is 47µF.
C2: Installation of C2 is recommended but optional. Typical value 100µF.
NOTE: It is not recommended to connect in parallel.

Recommended circuit

Conducted and Radiated Emissions

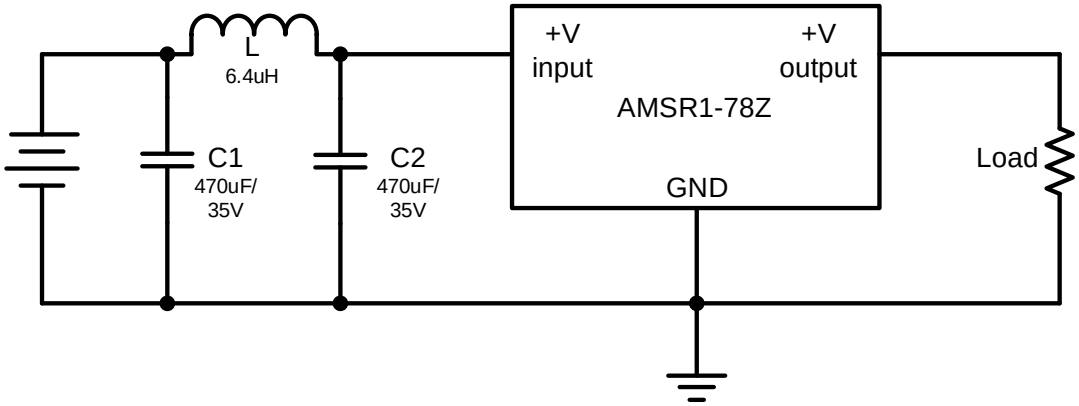

EFT/Surge

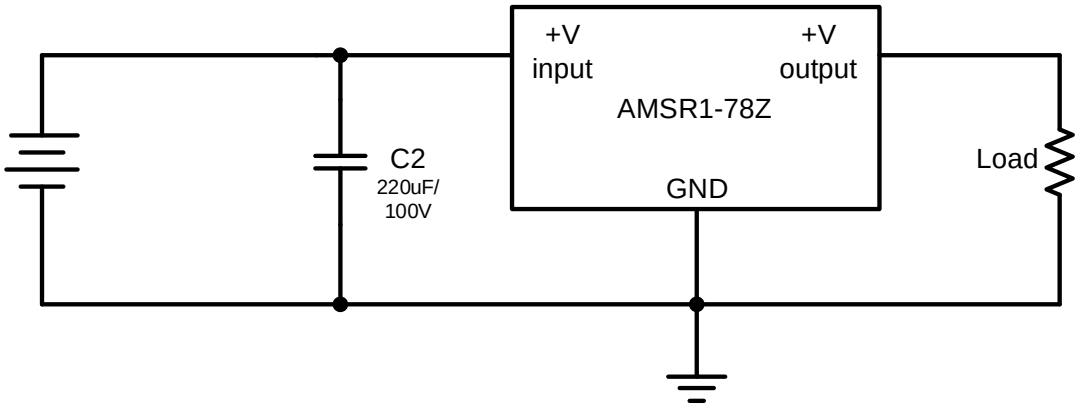

NOTE: 1. Datasheets are updated as needed and as such, specifications are subject to change without notice. Once printed or downloaded, datasheets are no longer controlled by Aimtec; refer to www.aimtec.com for the most current product specifications. **2.** Product labels shown, including safety agency certifications on labels, may vary based on the date manufactured. **3.** Mechanical drawings and specifications are for reference only. **4.** All specifications are measured at an ambient temperature of 25°C, humidity<75%, nominal input voltage and at rated output load unless otherwise specified. **5.** Aimtec may not have conducted destructive testing or chemical analysis on all internal components and chemicals at the time of publishing this document. CAS numbers and other limited information are considered proprietary and may not be available for release. **6.** This product is not designed for use in critical life support systems, equipment used in hazardous environments, nuclear control systems or other such applications which necessitate specific safety and regulatory standards other the ones listed in this datasheet. **7.** Warranty is in accordance with Aimtec's standard Terms of Sale available at www.aimtec.com.