aimtec
Your Power Partner

Series AMSR1-78Z

Up to 5 Watt | DC-DC Switching Regulator



FEATURES:

- 3 Pin SIP package
- Non-isolated regulated output
- Short circuit protection
- Pin-out compatible with LM78XX Linear Regulators
- No heatsink required
- Operating temperature -40°C to +85°C
- High efficiency Up To 94%
- Low ripple and noise

RoHS

Models

Single output

Model	Input Voltage (V)	Output Voltage (V)	Output Current max (mA)	Max Capacitive Load (uF)	Efficiency Vin Min (%)	Efficiency Vin Max (%)
AMSR1-781.5Z	4.75-18	1.5	1000	220	78	72
AMSR1-781.8Z	4.75-18	1.8	1000	220	82	76
AMSR1-782.5Z	4.75-18	2.5	1000	220	87	81
AMSR1-783.3Z	4.75-18	3.3	1000	220	90	85
AMSR1-7805Z	6.50-18	5	1000	220	94	89

NOTE: All specifications in this datasheet are measured at an ambient temperature of 25°C, humidity<75%, nominal input voltage and at rated output load unless otherwise specified.

Input Specifications

Parameters	Nominal	Typical	Maximum	Units
Voltage range	See the table above			
Filter	Capacitor			
Absolute Maximum Rating		-0.3~20		VDC
Peak Input Voltage Time		100		mS
Input reflected ripple current*	Full Load	40		mA p-p

* The input reflected ripple current should be measured with a 12μH inductor.

Output Specifications

Parameters	Conditions	Typical	Maximum	Units
Voltage accuracy			±2	%
Short Circuit protection	Continuous			
Short Circuit restart	Auto-Recovery			
Line voltage regulation	Vin=(LL-HL) at full load		±0.5	%
Load voltage regulation	10-100% load		±0.6	%
Temperature coefficient		±0.02		%/°C
Ripple & Noise	20MHz Bandwidth, 10-100% load		60	mV p-p
Minimum Load Current		10		% of Iout max
Capacitive load			220	uF

General Specifications

Parameters	Conditions	Typical	Maximum	Units
Switching frequency	100% load	330		KHz
Operating temperature		-40 to +60		°C
Storage temperature		-40 to +125		°C
Maximum case temperature			100	°C
Cooling	Free Air Convection			
Humidity			95	% RH
Case material	Non-conductive black plastic (UL94V-0 rated)			
Weight		2		g
Dimensions (L x W x H)	0.46 x 0.29 x 0.40 inches	11.70 x 7.40 x 10.20 mm		
MTBF	> 4 300 000 hrs (MIL-HDBK-217F, Ground Benign, t=+25 °C)			
Maximum soldering temperature	1.5 mm from case for 10sec		260	°C

Safety Specifications

Parameters	
Standards	EN 55032 class B, with the recommended circuit
	IEC 61000-4-2, Perf. Criteria A
	IEC 61000-4-3, Perf. Criteria A
	IEC 61000-4-4, Perf. Criteria A (external 220uF/100V cap required)
	IEC 61000-4-6, Perf. Criteria A
	IEC 61000-4-8, Perf. Criteria A

Pin Out Specifications

Pin	Single
1	+Vin
2	GND
3	+Vout

Dimensions

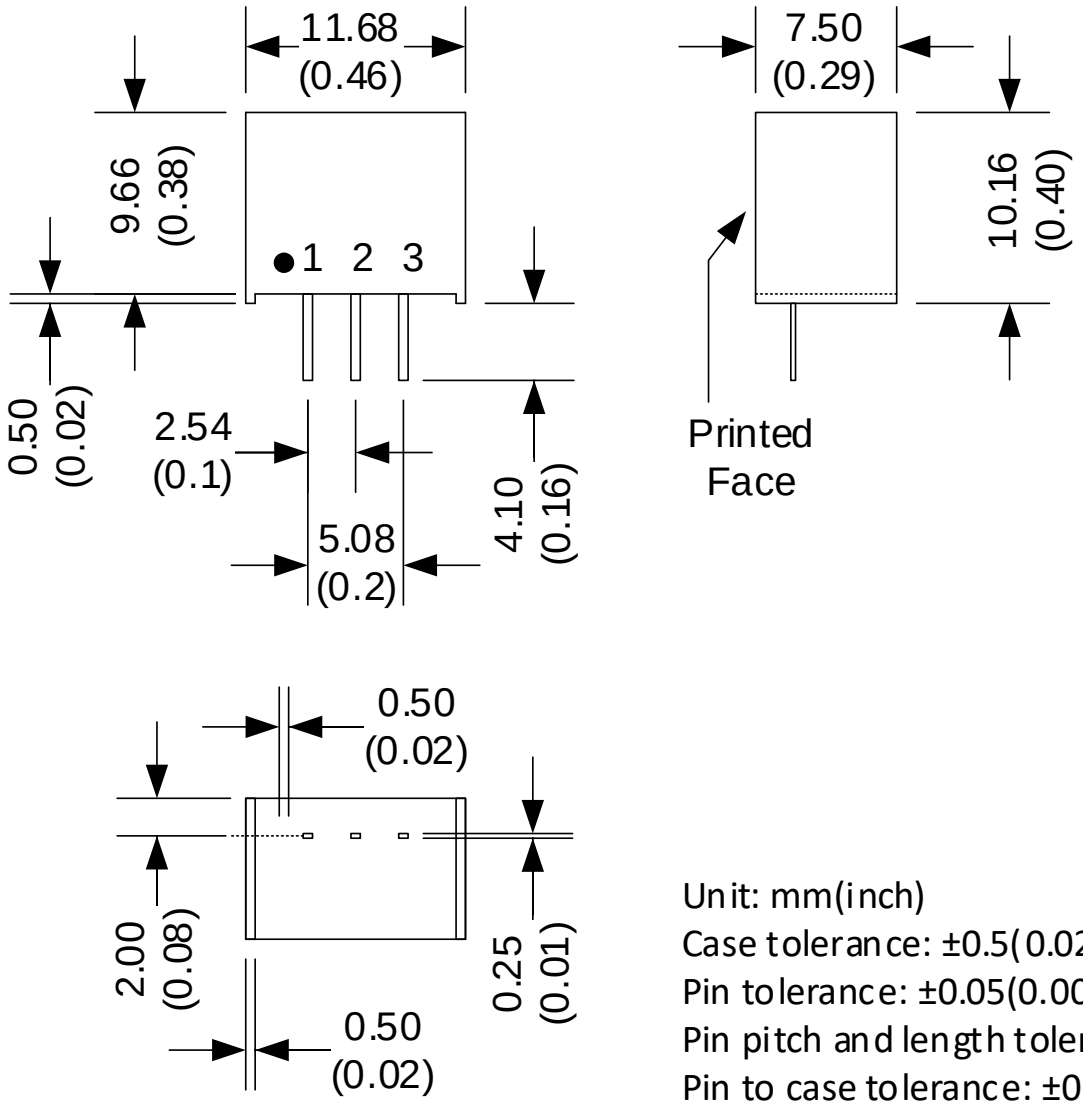

Unit: mm(inch)
Case tolerance: ±0.5(0.02)
Pin tolerance: ±0.05(0.002)
Pin pitch and length tolerance: ±0.35(0.014)
Pin to case tolerance: ±0.5(0.02)

Derating

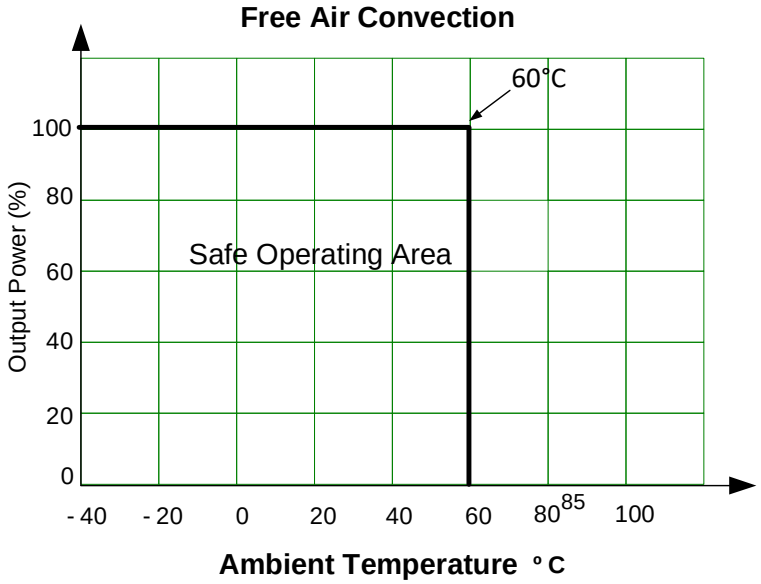

Application Circuits

Recommended soft start circuit

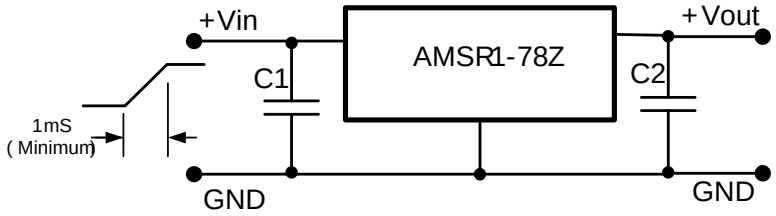

To protect converter during power up use “soft start” Vin and C1 = 47 uF
C 2 = 10 uF (optional)

Wide input isolated (up to 6000VDC) dual outputs with high efficiency

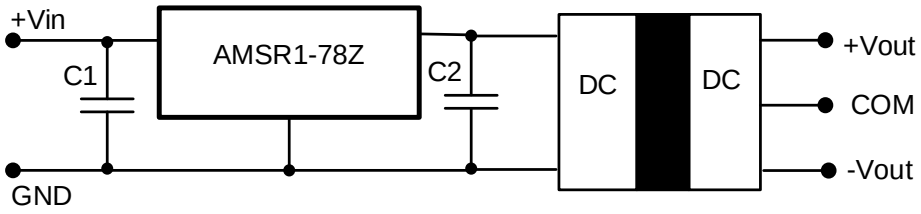

Isolated Dual Outputs
Wide Input Range 4.7V to 18V
C1: Optional
C2: Required for Decoupling (further decoupling may be required between the two converters).

Isolated (up to 6000VDC) single and regulated output

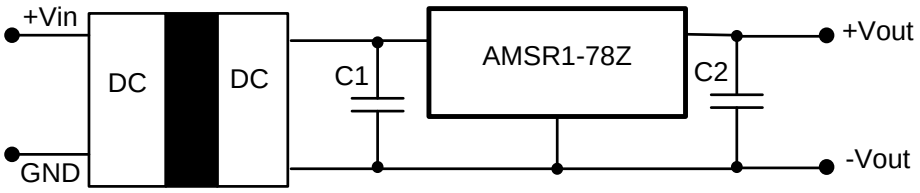

Isolated Single Output
Wide Input Range 6.5V to 18V
Point of Load Architecture
Improved Line/Load Regulation
C1: Required for Decoupling (further decoupling may be required between the two converters).
C2: Optional

Recommended EMI/EMS circuit

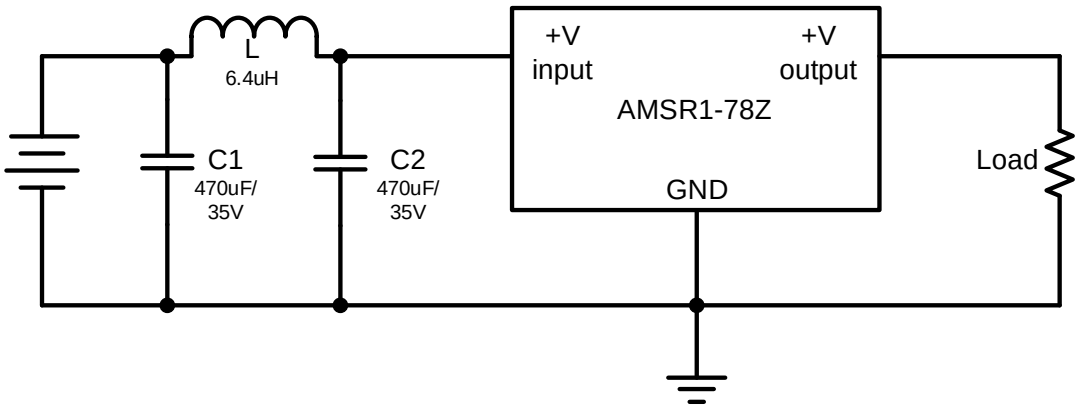

NOTE: 1. Datasheets are updated as needed and as such, specifications are subject to change without notice. Once printed or downloaded, datasheets are no longer controlled by Aimtec; refer to www.aimtec.com for the most current product specifications. **2.** Product labels shown, including safety agency certifications on labels, may vary based on the date manufactured. **3.** Mechanical drawings and specifications are for reference only. **4.** All specifications are measured at an ambient temperature of 25°C, humidity<75%, nominal input voltage and at rated output load unless otherwise specified. **5.** Aimtec may not have conducted destructive testing or chemical analysis on all internal components and chemicals at the time of publishing this document. CAS numbers and other limited information are considered proprietary and may not be available for release. **6.** This product is not designed for use in critical life support systems, equipment used in hazardous environments, nuclear control systems or other such applications which necessitate specific safety and regulatory standards other the ones listed in this datasheet. **7.** Warranty is in accordance with Aimtec's standard Terms of Sale available at www.aimtec.com.