AMSR2-78JZ

Click to ORDER samples



SIP3

Aimtec introduces the new AMSR2-78JZ, a 2A Switching Regulator which is designed to be a plug and play alternative to the traditional 78xx series three-terminal linear regulators.
The series features an ultra-wide input voltage range of 6-36V, 0.1mA ultra-low no load input current, continuous short-circuit protection, low ripple noise (typ.: 30mV) and much more.
The new 2A series has operating temperature from -40°C to +85°C, meets EN62368 standard (Pending) and has delivers efficiencies up to 95%, eliminating the need for a heat sink and cutting additional design space and installation cost. This series is suitable for use in applications such as industrial controls, medical, mining, railway and other related industries.

Features

- Input Voltage up to 36V
- Operating Temp: -40 °C to +85 °C
- Ultra-low no load input current: 0.1mA typ.
- Low ripple & noise, 30mV typ.
- Continuous Short Circuit Protection
- Design to meet EN62368

RoHS

3yr Warranty

Summary

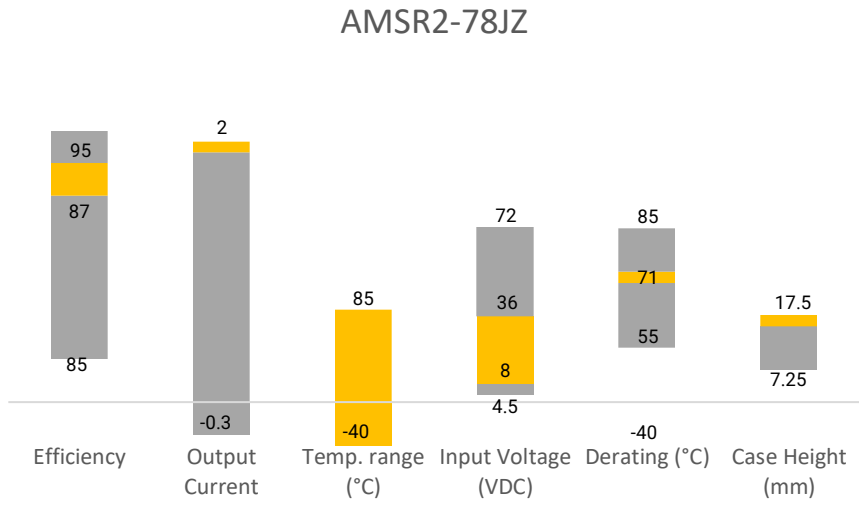

Training

Product Training Video (click to open)

Press Release

Coming Soon!

Application Notes

Applications



Models & Specifications

Single Output						
Model	Input Voltage (VDC)	Output Voltage (VDC)	Output Current max (mA)	Maximum capacitive Load (µF)	Efficiency Vin Max. @full load (%)	Efficiency Vin Min. @full load (%)
AMSR2-782.5JZ	24 (4.5 - 36)	2.5	2000	2000	83	89
AMSR2-783.3JZ	24 (6 - 36)	3.3	2000	1800	83	87
AMSR2-7805JZ	24 (8 - 36)	5	2000	1000	87	90
AMSR2-7809JZ	24 (13 - 36)	9	2000	680	90	93
AMSR2-7812JZ	24 (16 - 36)	12	2000	470	92	94
AMSR2-7815JZ	24 (18 - 36)	15	2000	470	93	95
AMSR2-783.3LJZ	24 (6 - 36)	3.3	2000	1800	83	87
AMSR2-7805LJZ	24 (8 - 36)	5	2000	1000	87	90
AMSR2-7812LJZ	24 (16 - 36)	12	2000	470	92	94
Add a 22µF/50V electrolytic capacitor at the input end when the input voltage is over 30V to prevent the device from being damaged by the voltage spike.						

Input Specification				
Parameters	Conditions	Typical	Maximum	Units
Voltage range	See Models table above			
Filter	Capacitor			
Quiescent Current	Positive output	0.1	1	mA
Reverse Polarity Input	Prohibited			

Output Specification				
Parameters	Conditions	Typical	Maximum	Units
Voltage accuracy	At 100% load, 3.3V output	±2	±4	%
	At 100% load, Others	±2	±3	
Line regulation	Full load, main input range	±0.4	±0.8	%
Load regulation	0-100% load	±0.5	±1.5	%
Short circuit protection	Continuous, Auto recovery			
Temperature coefficient			±0.03	%/ °C
Ripple & Noise	20MHz bandwidth, nominal input, 100% load	30	75	mV pk-pk
Transient recovery time	25% load step change	0.2	1	ms
Dynamic load stability	25% load step change	50	150	mV

General Specifications				
Parameters	**Conditions**	**Typical**	**Maximum**	**Units**
Switching frequency	100% load	400		KHz
Operating temperature	See derating graph	-40 to +85		°C
Storage temperature		-55 to +125		°C
Lead temperature	1.5mm from case 10 sec.		260	°C
Cooling	Free air convection			
Humidity	Non-condensing	95		% RH
Case material	Black flame-retardant and heat-resistant plastic (UL94 V-0)			
Weight		3.8		g
Dimensions (L x W x H)	0.45 x 0.35 x 0.69 inches, 11.50 x 9.00 x 17.50mm			
MTBF	> 2000 000 hrs (MIL-HDBK -217F, t=+25°C)/Full Load			
All specifications in this datasheet are measured at an ambient temperature of 25°C, humidity<75%, nominal input voltage and at rated output load unless otherwise specified.				

Safety Specifications		
Parameters		
Standards	EMI – Conducted and radiated emission	Design to meet CISPR32/EN55032, class B, with EMC recommended circuit part B
	Information technology Equipment	Design to meet EN62368
	Electrostatic Discharge Immunity	IEC 61000-4-2 Contact ±6KV, Criteria B
	RF, Electromagnetic Field Immunity	IEC 61000-4-3 10V/m, Criteria A
	Electrical Fast Transient/Burst Immunity	IEC 61000-4-4 ±1KV, Criteria B, with EMC recommended circuit part A
	Surge Immunity	IEC 61000-4-5 L-L ±1KV, Criteria B, with EMC recommended circuit part A
	RF, Conducted Disturbance Immunity	IEC 61000-4-6 3Vr.m.s, Criteria A

Derating

For 2.5/ 3.3/ 5V output models

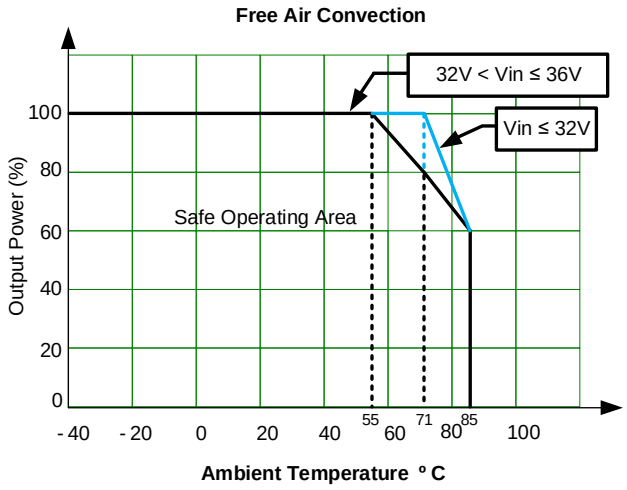

For 9/ 12/ 15V output models

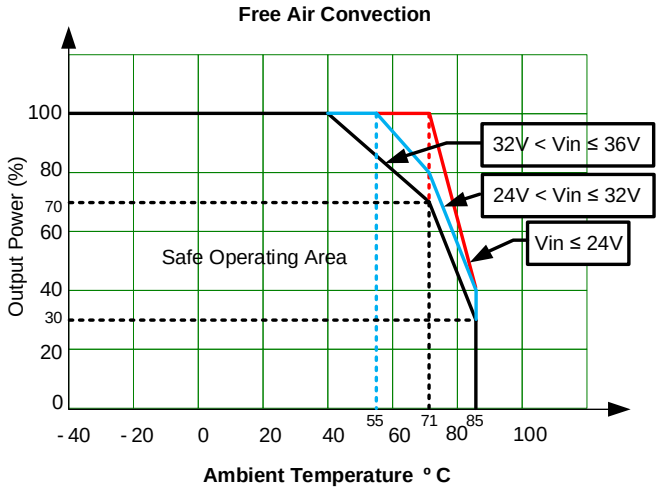

Typical Application Circuit

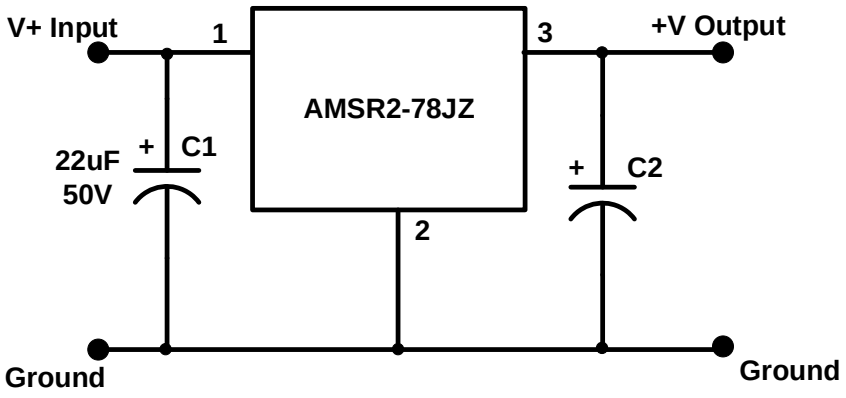

Model	C2
3.3 & 5V output models	22uF/10V
9V output models	22uF/16V
12V & 15V output models	22uF/25V

EMC Recommended Circuit

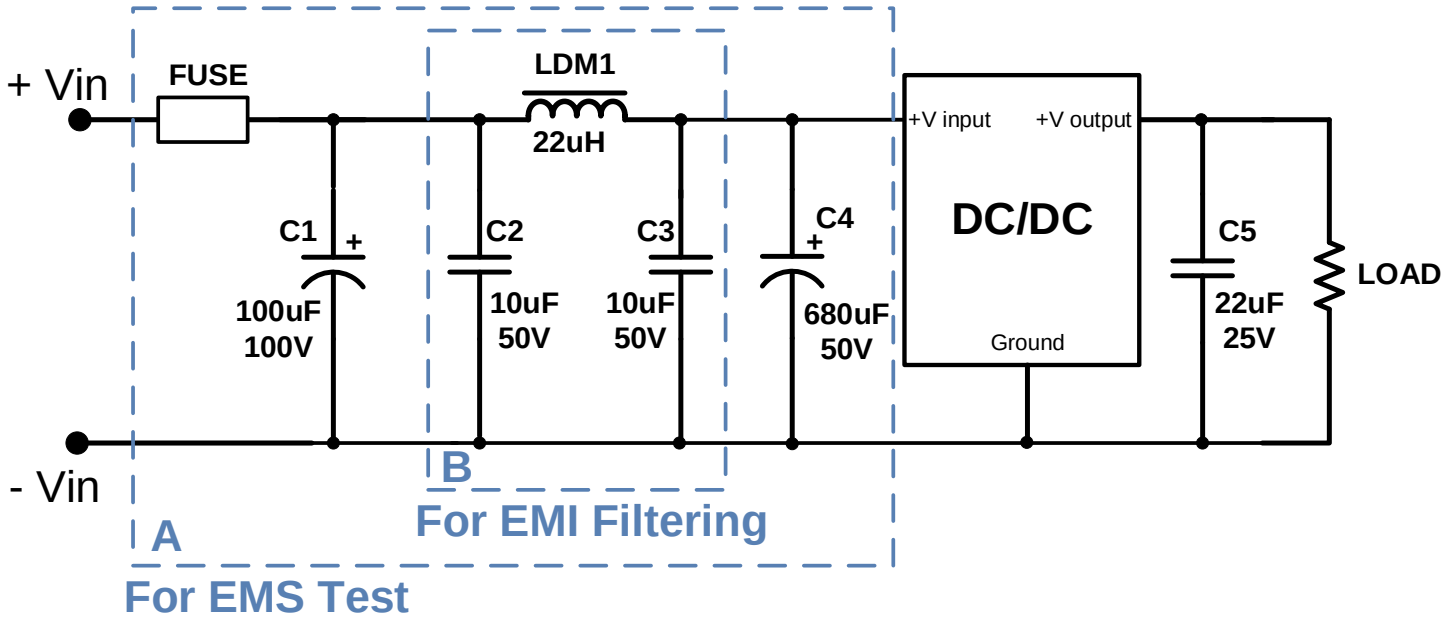

Dimensions

Straight pin models

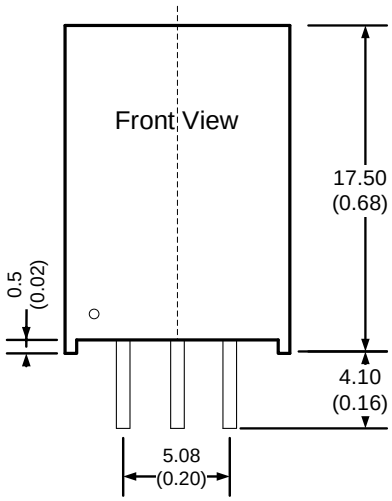

Right angled pin models

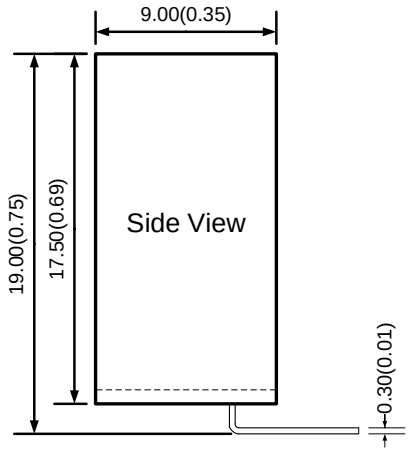

Pin Output Specifications	
Pin	Positive output
1	+V Input
2	Ground
3	+V Output

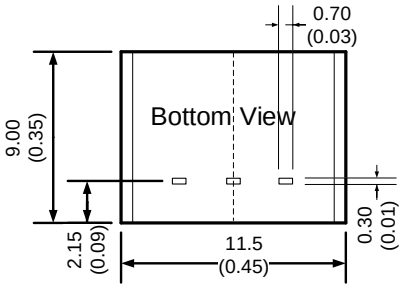

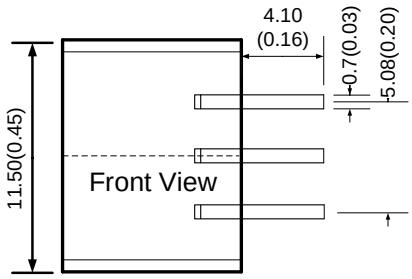

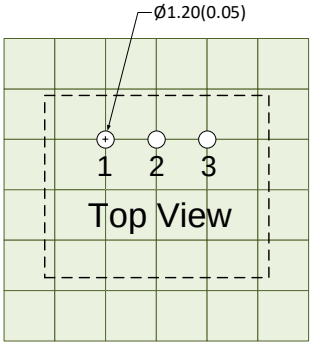

Grid: 2.54 x 2.54mm
Unit:mm[inch]
General tolerances:±0.25mm [± 0.010inch]

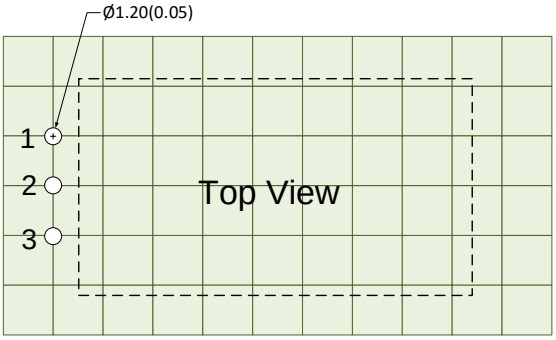

Grid: 2.54 x 2.54mm
Unit:mm[inch]
General tolerances:±0.25mm [± 0.010inch]

NOTE: 1. Datasheets are updated as needed and as such, specifications are subject to change without notice. Once printed or downloaded, datasheets are no longer controlled by Aimtec; refer to www.aimtec.com for the most current product specifications. **2.** Product labels shown, including safety agency certifications on labels, may vary based on the date manufactured. **3.** Mechanical drawings and specifications are for reference only. **4.** All specifications are measured at an ambient temperature of 25°C, humidity<75%, nominal input voltage and at rated output load unless otherwise specified. **5.** Aimtec may not have conducted destructive testing or chemical analysis on all internal components and chemicals at the time of publishing this document. CAS numbers and other limited information are considered proprietary and may not be available for release. **6.** This product is not designed for use in critical life support systems, equipment used in hazardous environments, nuclear control systems or other such applications which necessitate specific safety and regulatory standards other the ones listed in this datasheet. **7.** Warranty is in accordance with Aimtec's standard Terms of Sale available at www.aimtec.com.