AMSR3-NZ

Click to ORDER samples

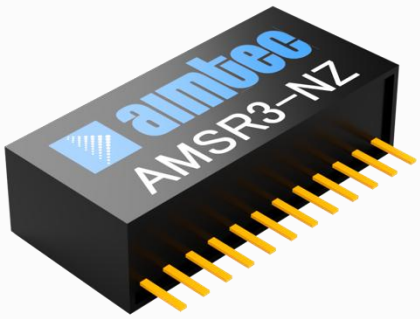

SIP12

Aimtec's AMSR3-NZ is a 3A Switching Regulator which is designed to be hardware engineer friendly. The series features an ultra-wide input voltage range of 8-36V, 2mA ultra-low no-load input current, continuous short-circuit protection, low ripple noise (max.: up to 70mV) and much more.

The 3A series has an operating temperature from -40°C to +85°C, meets EN55032 standard (Pending) and delivers efficiencies up to 97%, eliminating the need for a heat sink, which cuts design space and installation costs. This series is suitable for use in applications such as industrial controls, IoT, instrument, telecom and other related industries.

Features

- Input Voltage up to 36V
- Operating Temp: -40 °C to +85 °C
- Ultra-low no load input current: 2mA typ.
- Low ripple & noise, up to 70mV max.
- Continuous short circuit protection
- Efficiency up to 97%

RoHS

3yr Warranty

Summary

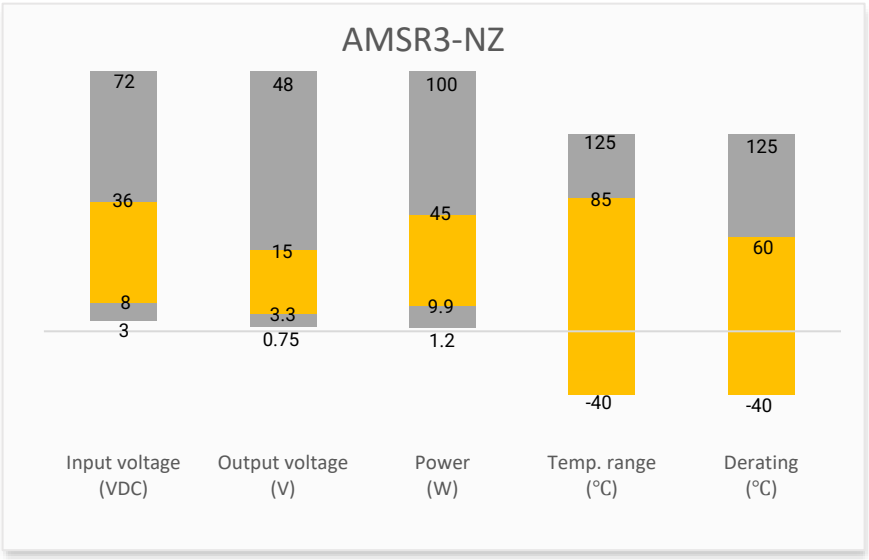

Training

Product Training Video (click to open)

Press Release

Coming Soon!

Application Notes

Applications

IoT

Industrial

Models & Specifications

Model	Input Voltage (VDC)	Output Voltage (VDC)	Output Current max (A)	Maximum Capacitive Load (µF)	Efficiency (%) Typ.	
					Vin (Min) @Full load	Vin (Max) @Full load
AMSR3-3NZ	24 (8 - 36)	3.3	3	1000	90	83
AMSR3-5NZ	24 (8 - 36)	5	3	680	93	89
AMSR3-6NZ	24 (10 - 36)	6.5	3	330	94	90
AMSR3-9NZ	24 (13 - 36)	9	3	330	95	91
AMSR3-12NZ	24 (16 - 36)	12	3	330	97	93
AMSR3-15NZ	24 (19 - 36)	15	3	330	97	94

Note: * For input voltage exceeding 30 VDC, an input capacitor of 22µF/50V is required.
** Use suffix "-O" for Open frame (ex. AMSR3-3NZ-O is Open frame version).

Input Specification

Parameters	Conditions	Typical	Maximum	Units
Voltage range	24VDC Nominal		36	VDC
No-load input current		2	4	mA
Reverse polarity at input	Avoid / Not protected			
Ctrl	Module ON	Ctrl pin open or pulled high (4.5 ~ 14VDC)		
	Module OFF	Ctrl pin pulled low to GND (0 ~ 0.8VDC)		
	Input current when off		4	mA
Input filter	Capacitors			

Note: The Ctrl pin voltage is referenced to input GND.

Output Specification

Parameters	Conditions	Typical	Maximum	Units
Voltage accuracy	0 – 100% load	±2	±3	%
Line regulation	Full load	±0.5	±1	%
Load regulation	10-100% load	±0.5	±1	%
Short circuit protection	Continuous, Auto recovery			
Ripple & Noise*	Vout ≤ 9V models	40	70	mV pk-pk
	others	50	100	mV pk-pk
Transient recovery time	Nominal input, 50% load step change	100	200	µS
Transient response deviation	50% load step change, 3.3V output		±5	% Vout
	50% load step change, 5V / 6.5V output		±4	% Vout
	50% load step change, 9V / 12V output		±3	% Vout
	50% load step change, 15V output		±2	% Vout

*20MHz bandwidth with a 22µF CC.

General Specifications				
Parameters	**Conditions**	**Typical**	**Maximum**	**Units**
Switching frequency		250	400	KHz
Operating temperature	See derating graph	-40 to +85		°C
Storage temperature		-55 to +125		°C
Temperature coefficient			±0.03	%/°C
Pin soldering resistance temperature	Soldering time < 10s		260	°C
Cooling	Free air convection			
Humidity	Non-condensing		95	% RH
Case material	standard	Black plastic (flammability to UL 94V-0)		
	Use suffix “O” series	Open frame		
Weight	standard	9.3		g
	Use suffix “O” series	4.0		
Dimensions (L x W x H)	standard	1.27 x 0.36 x 0.58 inches (32.15 x 9.05 x 14.85 mm)		
	Use suffix “O” series	1.21 x 0.23 x 0.49 inches (30.60 x 5.80 x 12.50 mm)		
MTBF	> 2 000 000 hrs (MIL-HDBK-217F, t=+25°C)			
All specifications in this datasheet are measured at an ambient temperature of 25°C, humidity<75%, nominal input voltage and rated output load unless otherwise specified.				

Safety Specifications		
Parameters		
	EMI - Conducted and radiated emission	EN55032, CLASS B (with recommended circuit)
	Electrostatic Discharge Immunity	IEC 61000-4-2 Contact ±6KV, Criteria B
	RF, Electromagnetic Field Immunity	IEC 61000-4-3 10V/m, Criteria A
	Electrical Fast Transient/Burst Immunity	IEC 61000-4-4 ±1KV, Criteria B (with recommended circuit)
	Surge Immunity	IEC 61000-4-5 L-L ±1KV, Criteria B (with recommended circuit)
	RF, Conducted Disturbance Immunity	IEC 61000-4-6 3Vr.m.s, Criteria A

Derating

3.3V / 5V / 6.5V output

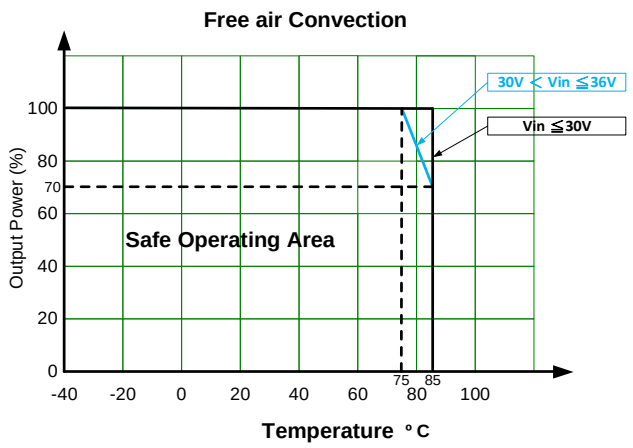

9V / 12V / 15V output

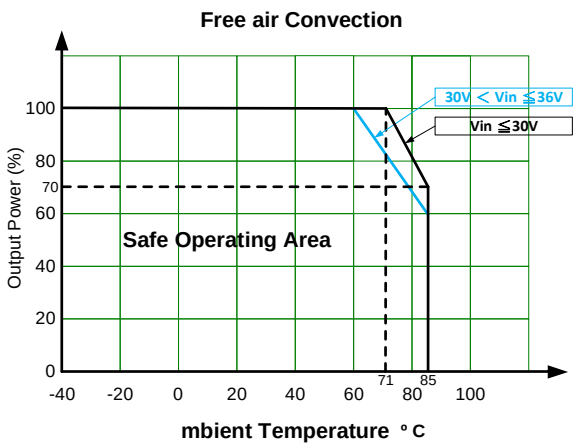

Typical Application Circuit

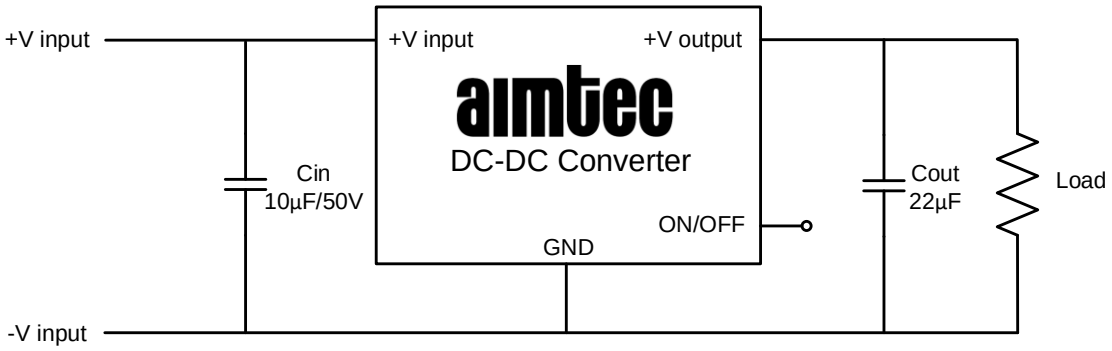

EMC Application Circuit (Conducted Emissions)

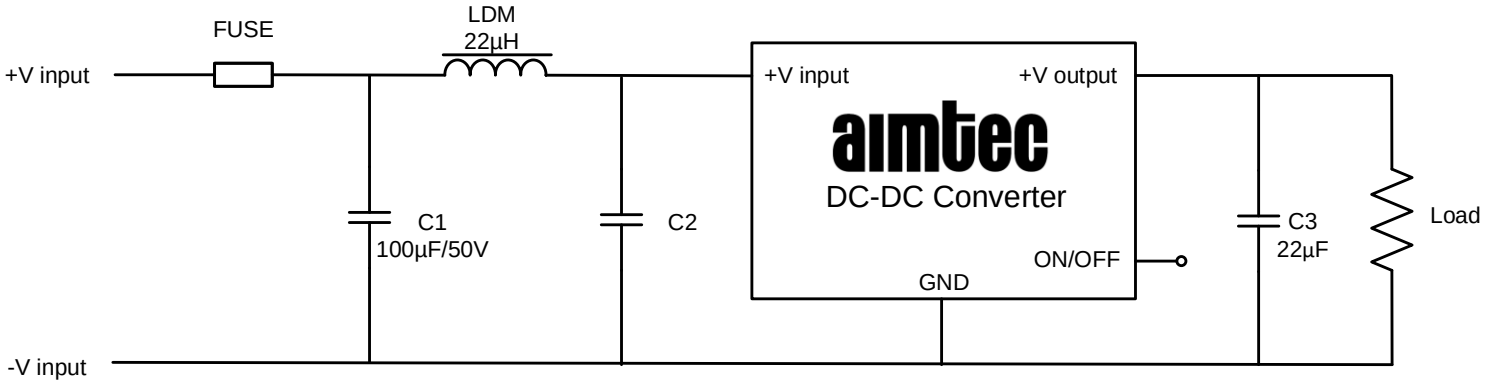

Emissions C2 : 100µF/50V
Immunity C2 : 680µF/50V

Trim function for output voltage adjustment

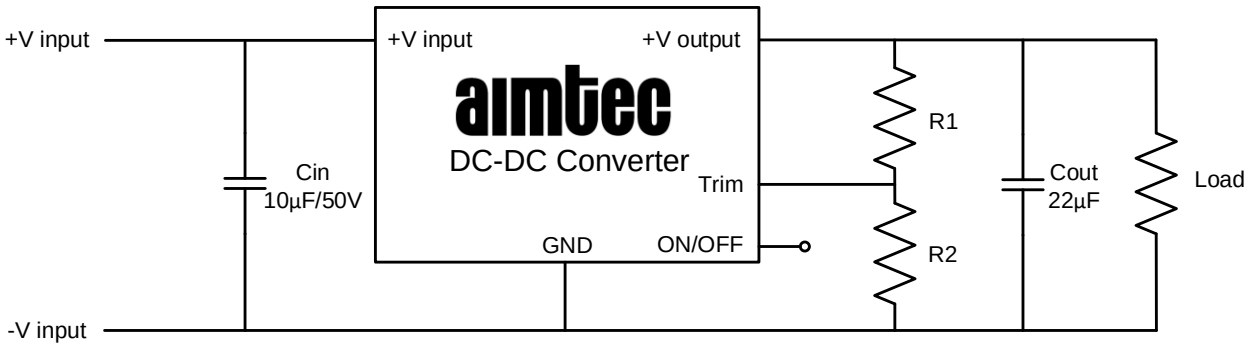

AMSR3-3NZ or AMSR3-3NZ-O

Vout(V)	3	3.3	4	4.5
R1 (KΩ)	500			
R2 (KΩ)			95	52

AMSR3-5NZ or AMSR3-5NZ-O

Vout	4	4.5	5	5.5	6
R1 (KΩ)	195	470			
R2 (KΩ)				125	58

AMSR3-6NZ or AMSR3-6NZ-O

Vout	5.5	6	6.5	7	8
R1 (KΩ)	330	750			
R2 (KΩ)				140	40

AMSR3-9NZ or AMSR3-9NZ-O

Vout	7	8	9	10	11
R1 (KΩ)	220	520			
R2 (KΩ)				65	28

AMSR3-12NZ or AMSR3-12NZ-O

Vout	10	11	12	13	14
R1 (KΩ)	530	1180			
R2 (KΩ)				110	50

AMSR3-15NZ or AMSR3-15NZ-O

Vout	13	14	15	16	17
R1 (KΩ)	590	1290			
R2 (KΩ)				90	40

Dimensions

Standard

Front View

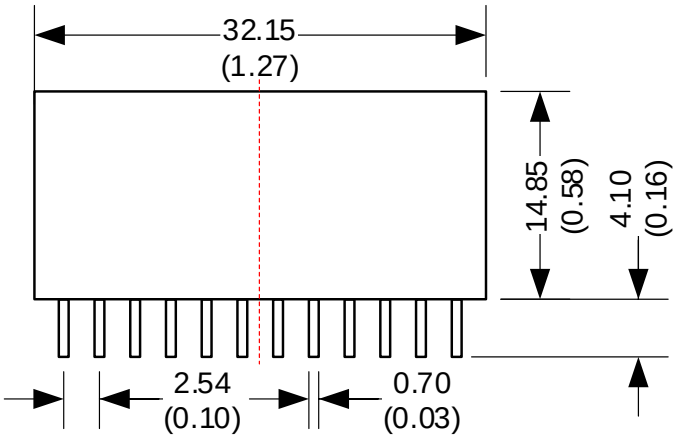

Top View

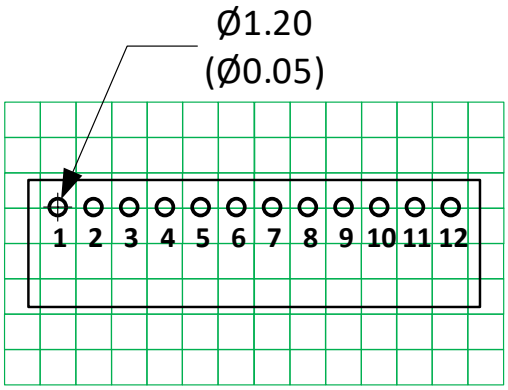

Note : Grid 2.54*2.54 mm

Bottom View

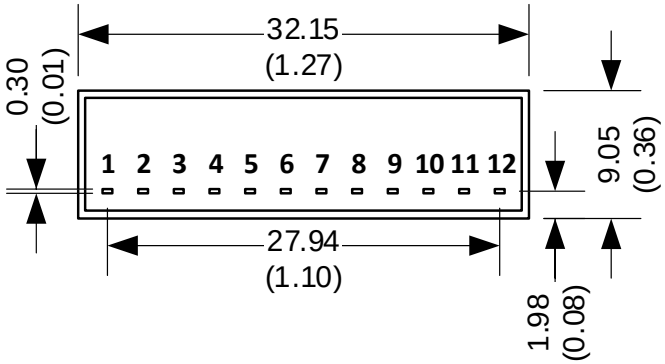

Pin Output Specifications	
Pin	Positive output
1	Ctrl (ON/OFF)
2,3,4	+V Input
5,6,7,8	GND
9,10,11	+V Output
12	Trim

Notes:
All dimensions are typical in millimeters (inches).
Pin diameter tolerances : ±0.10 (±0.004)
General tolerance : ±0.50 (±0.02)

Use suffix “O” series

Front View

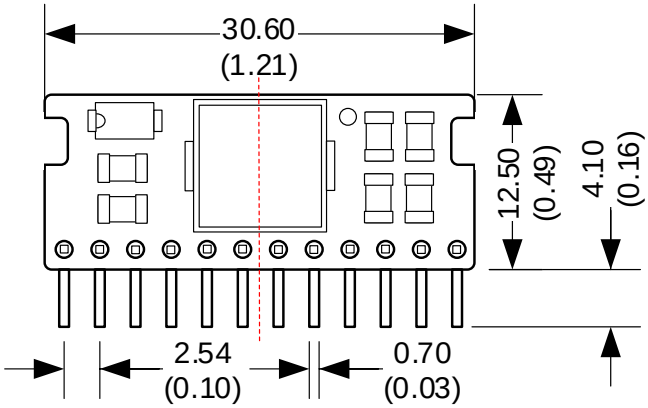

Top View

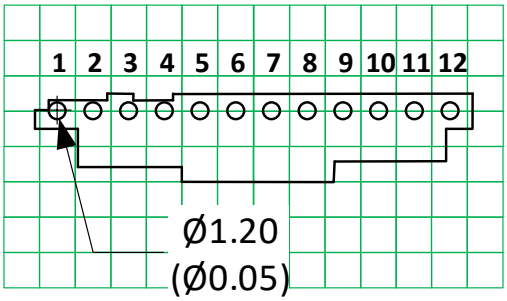

Note : Grid 2.54*2.54 mm

Bottom View

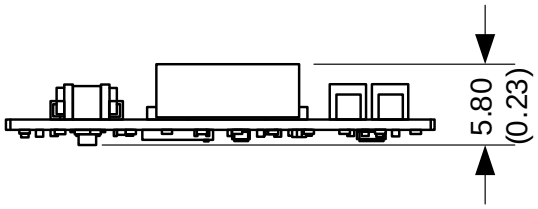

Pin Output Specifications	
Pin	Positive output
1	Ctrl (ON/OFF)
2,3,4	+V Input
5,6,7,8	GND
9,10,11	+V Output
12	Trim

Notes:
All dimensions are typical in millimeters (inches).
Pin diameter tolerances : ±0.10 (±0.004)
General tolerance : ±0.50 (±0.02)

NOTE: 1. Datasheets are updated as needed and as such, specifications are subject to change without notice. Once printed or downloaded, datasheets are no longer controlled by Aimtec; refer to www.aimtec.com for the most current product specifications. **2.** Product labels shown, including safety agency certifications on labels, may vary based on the date manufactured. **3.** Mechanical drawings and specifications are for reference only. **4.** All specifications are measured at an ambient temperature of 25°C, humidity<75%, nominal input voltage and at rated output load unless otherwise specified. **5.** Aimtec may not have conducted destructive testing or chemical analysis on all internal components and chemicals at the time of publishing this document. CAS numbers and other limited information are considered proprietary and may not be available for release. **6.** This product is not designed for use in critical life support systems, equipment used in hazardous environments, nuclear control systems or other such applications which necessitate specific safety and regulatory standards other the ones listed in this datasheet. **7.** Warranty is in accordance with Aimtec’s standard Terms of Sale available at www.aimtec.com.