AMSRD-NZ

Click to ORDER samples



DFN

Aimtec's AMSRD-NZ series is a 0.5A Switching Regulator which is designed to be an ultra-compact SMD DFN package to help overthrow the traditional LM 78xx three-terminal linear regulators. The series features an ultra-wide input voltage range of 6-36V, 0.1mA ultra-low no load input current, continuous short-circuit protection, low ripple noise (typ.: 20mV) and much more.
The AMSRD-NZ boats operating temperature from -40°C to +105°C, meets EN62368 standard (Pending) and delivers efficiencies up to 95%, eliminating the need for a heat sink, which cuts design space and installation cost. This series is suitable for applications such as industrial controls, medical, mining, railway and other related industries.

Features

- Input Voltage up to 36V
- Operating Temp: -40 °C to +105 °C
- Ultra-low no load input current: 0.1mA typ.
- Low ripple & noise, 20mV typ.
- Continuous Short Circuit Protection
- Design to meet EN62368

RoHS

3yr Warranty

Summary

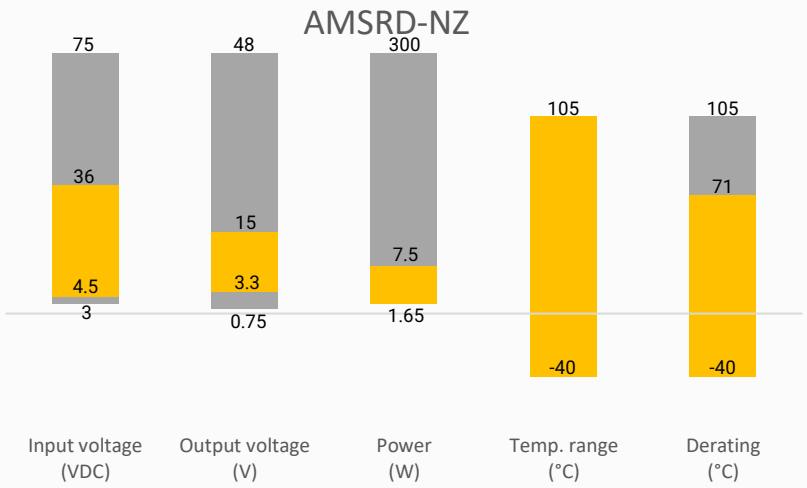

Training

Product Training Video (click to open)

Press Release

Coming Soon!

Application Notes

Applications

IoT

Industrial

Railway

Models & Specifications

Single Output

Model	Input Voltage (VDC)	Output Voltage (VDC)	Output Current max (mA)	Maximum capacitive Load (µF)	Efficiency Vin Max. @full load (%)	Efficiency Vin Min. @full load (%)
AMSRD-3SNZ	24 (4.5 - 36)	3.3	500	680	71	89
	12 (7 - 32)	-3.3	-300	470	71	80
AMSRD-5SNZ	24 (6.5 - 36)	5	500	680	78	91
	12 (7 - 31)	-5	-300	470	71	78
AMSRD-6SNZ	24 (8 - 36)	6.5	500	680	81	91
	12 (7 - 28)	-6.5	-250	470	73	80
AMSRD-9SNZ	24 (12 - 36)	9	500	680	86	92
	12 (7 - 27)	-9	-200	470	77	82
AMSRD-12SNZ	24 (15 - 36)	12	500	680	86	92
	12 (8 - 24)	-12	-150	470	79	81
AMSRD-15SNZ	24 (18 - 36)	15	500	680	87	91
	12 (8 - 21)	-15	-150	470	84	80

Note: Add a 22µF/50V electrolytic capacitor at the input end when the input voltage is over 30V to prevent the device from being damaged by the voltage spike.

Input Specification

Parameters	Conditions	Typical	Maximum	Units
Voltage range	See Models table above			
Filter	Capacitor			
Quiescent Current	Positive output	0.1		mA
ON/OFF	On	Ctrl pin open or pulled high(2.5-5VDC)		
	Off	Ctrl pin pulled low to GND(-Vo) (0-0.6VDC)		
	Input current when off	240		uA
Reverse Polarity Input	Prohibited			

Note: The positive output ON/OFF pin voltage is referenced to input GND; Negative output ON/OFF pin voltage is referenced to -Vo.

Output Specification

Parameters	Conditions	Typical	Maximum	Units
Voltage accuracy	At 100% load, 3.3V output	±2	±4	%
	At 100% load, Others	±2	±3	%
Line regulation	Full load, main input range	±0.2		%
Load regulation	10-100% load	±0.4		%
Short circuit protection	Continuous, Auto recovery			
Temperature coefficient		±0.02		%/ °C
Ripple & Noise	20MHz bandwidth, nominal input, 100% load	20	45	mV pk-pk
Transient recovery time	25% load step change	0.2	0.8	ms
Dynamic load stability	25% load step change	50	120	mV
Voltage adjustment		±10		%Vout

General Specifications				
Parameters	**Conditions**	**Typical**	**Maximum**	**Units**
Switching frequency	100% load	2		MHz
Operating temperature	See derating graph	-40 to +105		°C
Storage temperature		-55 to +125		°C
Lead temperature	Over 217°C, 10 sec max, IPC/JEDEC J-STD-020D.1		245	°C
Cooling	Free air convection			
Humidity	Non-condensing		95	% RH
Moisture Sensitivity Level (MSL)	IPC/JEDEC J-STD-020D.1	Level 3		
Pollution Degree		PD3		
Case material	Black flame-retardant and heat-resistant plastic (UL94 V-0)			
Weight		0.58		g
Dimensions (L x W x H)	0.35 x 0.28 x 0.12 inches, 9.00 x 7.00 x 3.10mm			
MTBF	> 9 152 000 hrs (MIL-HDBK -217F, t=+25°C)/Full Load			
All specifications in this datasheet are measured at an ambient temperature of 25°C, humidity<75%, nominal input voltage and at rated output load unless otherwise specified.				

Safety Specifications		
Parameters		
Standards	Design to meet EN62368	
	EMI - Conducted and radiated emission	Design to meet CISPR32/EN55032, class B, with EMC recommended circuit part B
	Information technology Equipment	Design to meet EN62368
	Electrostatic Discharge Immunity *	IEC 61000-4-2 Contact ±6KV, Criteria B
	RF, Electromagnetic Field Immunity	IEC 61000-4-3 10V/m, Criteria A
	Electrical Fast Transient/Burst Immunity	IEC 61000-4-4 ±1KV, Criteria B, with EMC recommended circuit part A
	Surge Immunity	IEC 61000-4-5 L-L ±1KV, Criteria B, with EMC recommended circuit part A
	RF, Conducted Disturbance Immunity	IEC 61000-4-6 3Vr.m.s, Criteria A
* The ESD immunity level for Ctrl & Trim pin is ±2KV when no additional components are connected. For Ctrl pin, connect a 105K/50V capacitor between Ctrl pin and GND/-Vo to meet ESD immunity level ±6KV. For Trim pin, connect a 22V/30A varistor between Trim pin and GND/-Vo to meet ESD immunity level ±6KV.		

Derating

For 3.3V/ 5V / 6.5V output models

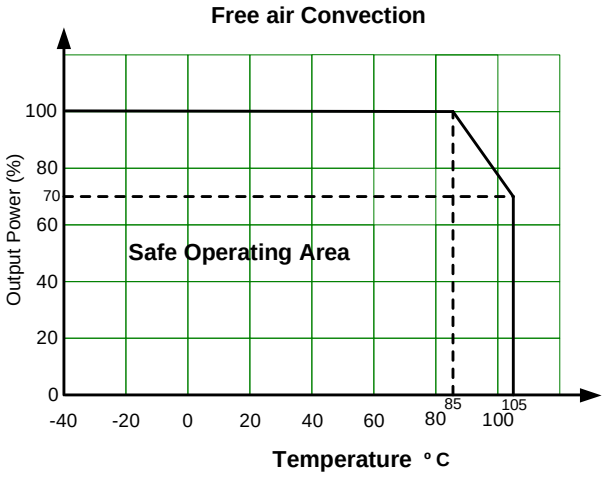

For 9V/ 12V/ 15V output models

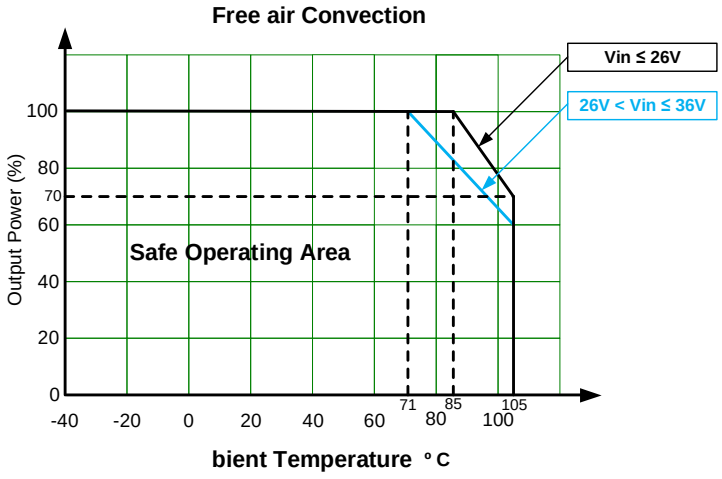

Typical Application Circuit

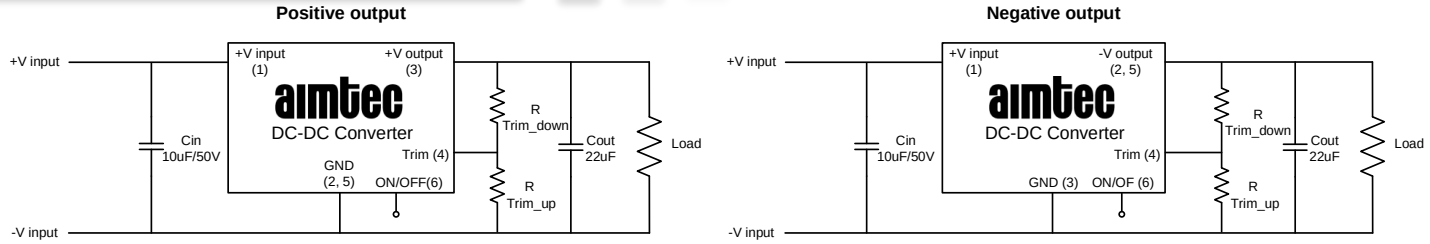

Model	Cout
3.3 & 5V output models	22uF/10V
6.5 & 9V output models	22uF/16V
12V & 15V output models	22uF/25V

EMC Recommended Circuit

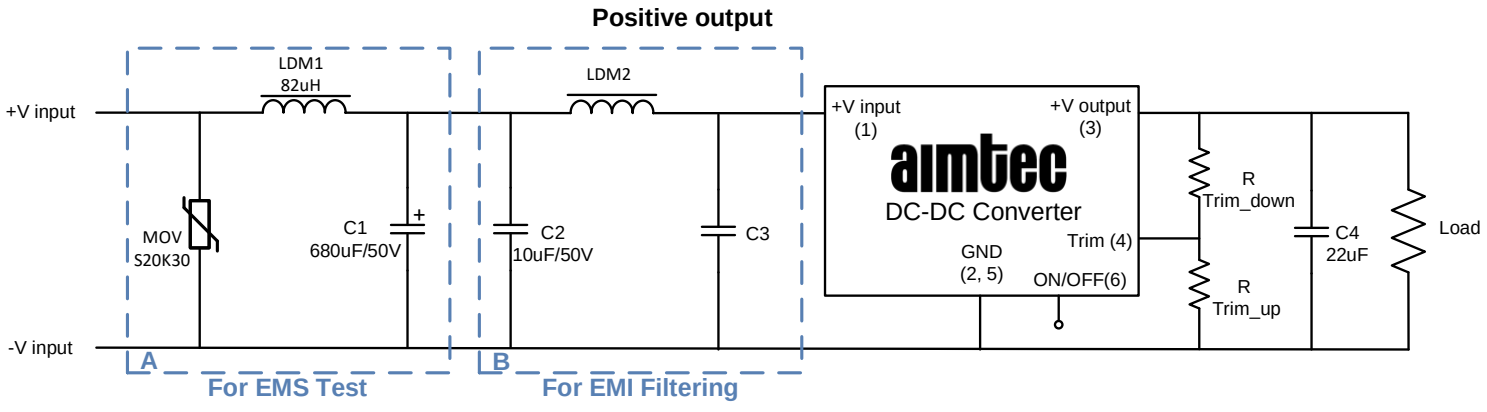

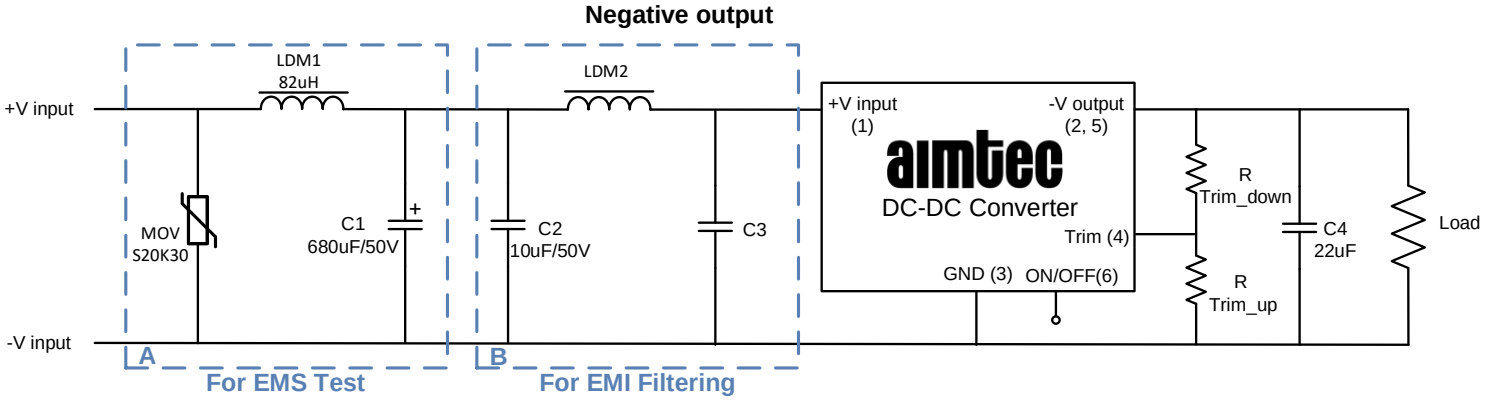

Model	LDM2	C3	C4
3.3V output models (Positive output)	10uH	0.47uF/50V	22uF/10V
3.3V output models (Negative output)	22uH	/	22uF/10V
5V output models	10uH	/	22uF/10V
6.5 & 9V output models	10uH	1uF/50V	22uF/16V
12V & 15V output models	22uH	0.47uF/50V	22uF/25V

Dimensions

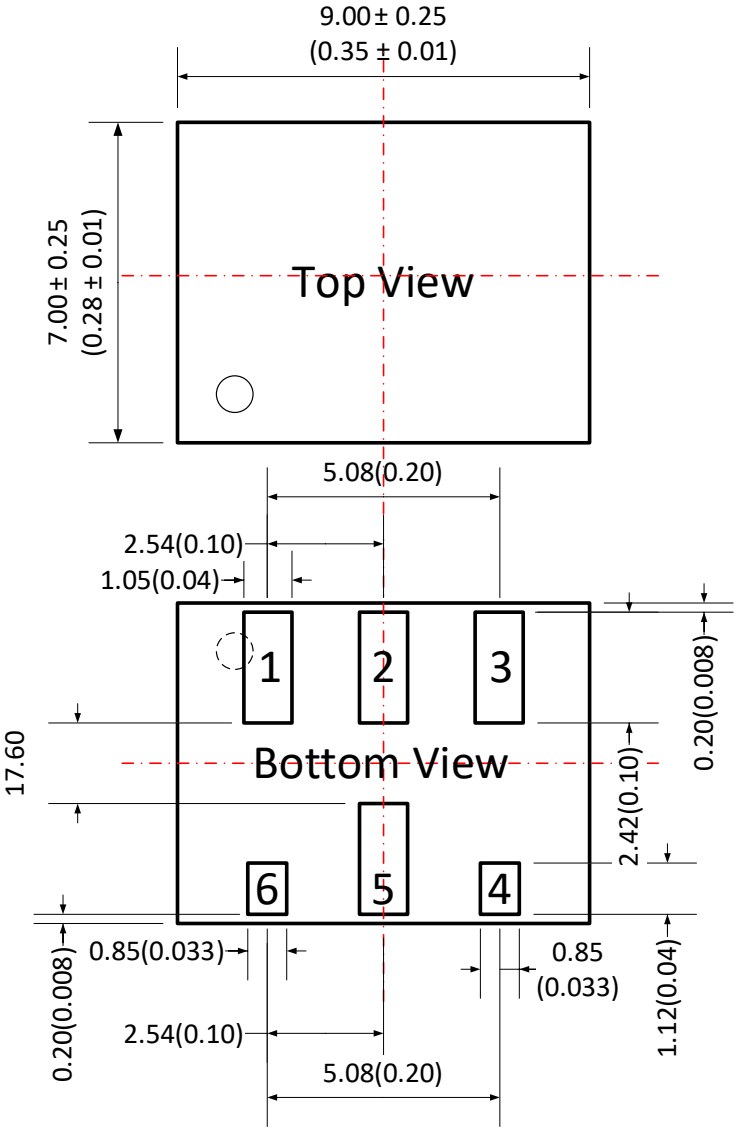

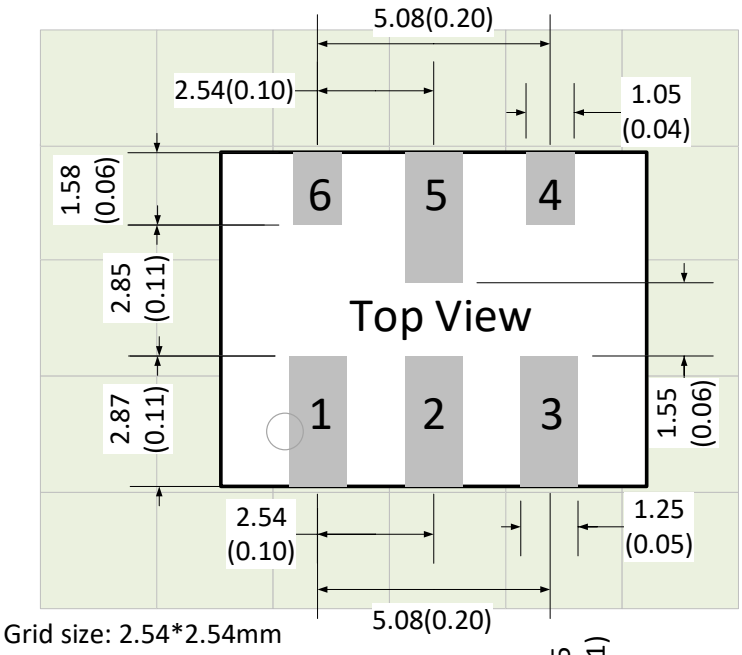

Grid size: 2.54*2.54mm

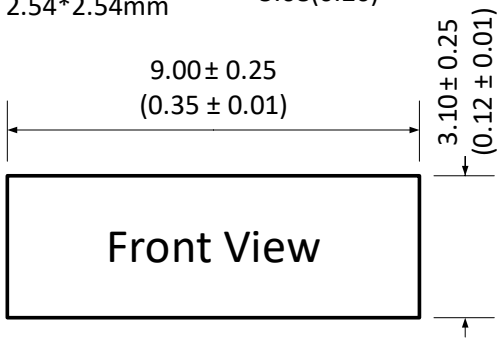

Note:
Unit: mm(inch)
Pin diameter tolerance: ±0.1 (±0.004)

Pin Out Specifications		
Pin	Positive	Negative
1	+V Input	+V Input
2	Ground	-V Output
3	+V Output	Ground
4	Trim	Trim
5	Ground	-V Output
6	Ctrl	Ctrl

Trimming

Output voltage can be externally trimmed by utilizing the methods as shown below

Fixed Resistor **Variable Potentiometer**

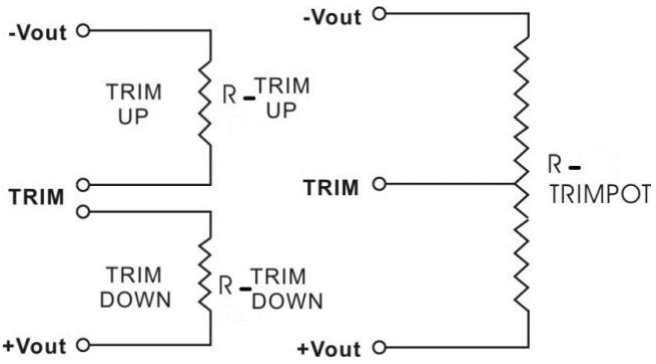

Leave open if not used.

AMSRD-3NZ

Trim down %	1	2	3	4	5	6	7	8	9	10
Vout (VDC)	3.267	3.234	3.201	3.168	3.135	3.102	3.069	3.036	3.003	2.97
Rt down (KΩ)	2841.084	1492.284	985.953	720.615	557.291	446.635	366.708	306.271	258.969	220.941
Trim up %	1	2	3	4	5	6	7	8	9	10
Vout (VDC)	3.333	3.366	3.399	3.432	3.465	3.498	3.531	3.564	3.597	3.63
Rt up (KΩ)	1345.848	551.708	325.22	218	155.474	114.516	85.608	64.114	47.506	34.289

AMSRD-5NZ

Trim down %	1	2	3	4	5	6	7	8	9	10
Vout (VDC)	4.95	4.9	4.85	4.8	4.75	4.7	4.65	4.6	4.55	4.5
Rt down (KΩ)	3785.86	1620.735	1012.235	725.538	558.753	449.66	372.74	315.589	271.453	236.342
Trim up %	1	2	3	4	5	6	7	8	9	10
Vout (VDC)	5.05	5.1	5.15	5.2	5.25	5.3	5.35	5.4	5.45	5.5
Rt up (KΩ)	436.836	223.672	142.983	100.552	74.383	56.632	43.798	34.088	26.485	20.37

AMSRD-6NZ

Trim down %	1	2	3	4	5	6	7	8	9	10
Vout (VDC)	6.435	6.37	6.305	6.24	6.175	6.11	6.045	5.98	5.915	5.85
Rt down (KΩ)	4012.101	1971.215	1287.964	945.782	740.294	603.227	505.286	431.81	374.651	328.916
Trim up %	1	2	3	4	5	6	7	8	9	10
Vout (VDC)	6.565	6.63	6.695	6.76	6.825	6.89	6.955	7.02	7.085	7.15
Rt up (KΩ)	546.264	254.178	157.241	108.852	79.844	60.515	46.715	36.367	28.32	21.884

AMSRD-9NZ

Trim down %	1	2	3	4	5	6	7	8	9	10
Vout (VDC)	8.91	8.82	8.73	8.64	8.55	8.46	8.37	8.28	8.19	8.1
Rt down (KΩ)	6790.23	3314.059	2164.283	1591.059	1247.655	1018.939	855.679	733.292	638.138	562.036
Trim up %	1	2	3	4	5	6	7	8	9	10
Vout (VDC)	9.09	9.18	9.27	9.36	9.45	9.54	9.63	9.72	9.81	9.9
Rt up (KΩ)	612.062	284.421	174.371	119.187	86.026	63.898	48.081	36.213	26.979	19.59

AMSRD-12NZ

Trim down %	1	2	3	4	5	6	7	8	9	10
Vout (VDC)	11.88	11.76	11.64	11.52	11.4	11.28	11.16	11.04	10.92	10.8
Rt down (KΩ)	10977.531	5416.242	3556.721	2625.877	2067.023	1694.309	1428.014	1228.254	1072.862	948.534
Trim up %	1	2	3	4	5	6	7	8	9	10
Vout (VDC)	12.12	12.24	12.36	12.48	12.6	12.72	12.84	12.96	13.08	13.2
Rt up (KΩ)	752.751	349.936	216.082	149.234	109.149	82.437	63.362	49.058	37.935	29.037

AMSRD-15NZ

Trim down %	1	2	3	4	5	6	7	8	9	10
Vout (VDC)	14.85	14.7	14.55	14.4	14.25	14.1	13.95	13.8	13.65	13.5
Rt down (KΩ)	9361.804	4605.022	3022.934	2232.546	1758.522	1442.594	1216.974	1047.782	916.202	810.947
Trim up %	1	2	3	4	5	6	7	8	9	10
Vout (VDC)	15.15	15.3	15.45	15.6	15.75	15.9	16.05	16.2	16.35	16.5
Rt up (KΩ)	495.572	230.226	141.582	97.223	70.596	52.84	40.154	30.639	23.237	17.316

Packing Information

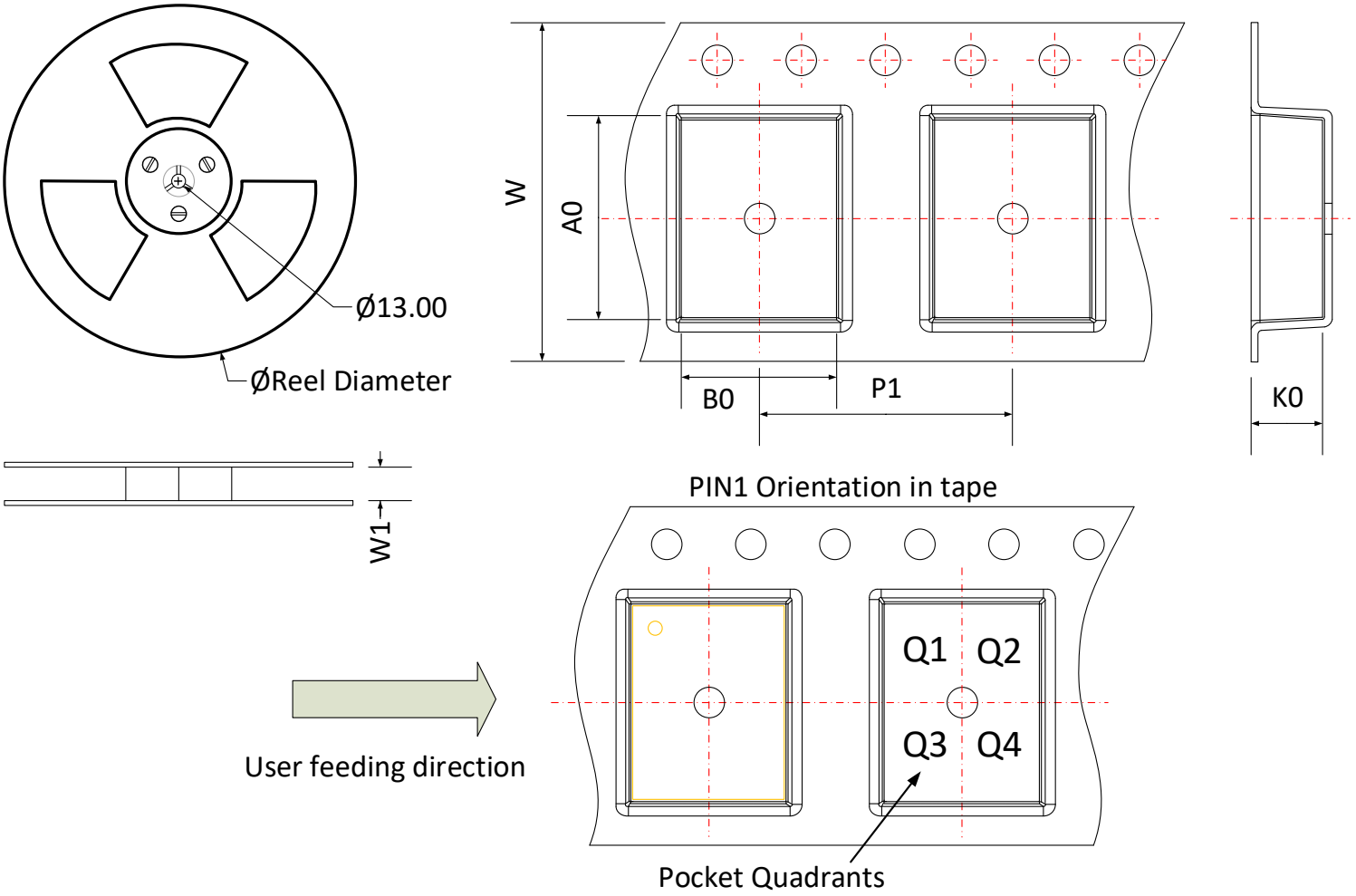

Device	Package Type	Pin	MPQ	Reel Diameter (mm)	Reel Width W1 (mm)	A0	B0	K0	P1	W	P1 Quadrant
AMSRD-NZ	SMD	6	1200	330.0	12.4	9.56	7.56	3.5	12.0	16.0	Q1

NOTE: 1. Datasheets are updated as needed and as such, specifications are subject to change without notice. Once printed or downloaded, datasheets are no longer controlled by Aimtec; refer to www.aimtec.com for the most current product specifications. **2.** Product labels shown, including safety agency certifications on labels, may vary based on the date manufactured. **3.** Mechanical drawings and specifications are for reference only. **4.** All specifications are measured at an ambient temperature of 25°C, humidity<75%, nominal input voltage and at rated output load unless otherwise specified. **5.** Aimtec may not have conducted destructive testing or chemical analysis on all internal components and chemicals at the time of publishing this document. CAS numbers and other limited information are considered proprietary and may not be available for release. **6.** This product is not designed for use in critical life support systems, equipment used in hazardous environments, nuclear control systems or other such applications which necessitate specific safety and regulatory standards other the ones listed in this datasheet. **7.** Warranty is in accordance with Aimtec's standard Terms of Sale available at www.aimtec.com.