AMSRL-Z

Click to ORDER samples



Open Frame SMD

Aimtec launched the new AMSRL-Z switching regulator, an ultra-low-profile open frame non-isolated DC-DC converter. The dimensions of AMSRL-Z series are of 19.5 x 11.8 x 5mm which is extremely compact for this class.

Furthermore, the AMSRL-Z provides an ultra-wide input voltage range of 9 - 72V in a convenient SMD package. This series eliminates the need of a heat sink having an operating temperature range of -40 to +105°C.

This series also delivers an efficiency up to 92%, has low stand-by power consumption and short-circuit protection. These models can be widely used for applications in industrial control, instrumentation industries, various IoT applications and many more!

Features

- Wide Input Range: 9VDC ~ 72VDC
- Operating Temp: -40 °C to +105 °C
- Low ripple & noise, up to 75mV(p-p)
- Output short circuit protection (Continuous)
- Regulated Output
- Adjustable output voltage
- SMD type package with a height 5mm

RoHS

3yr Warranty

Summary

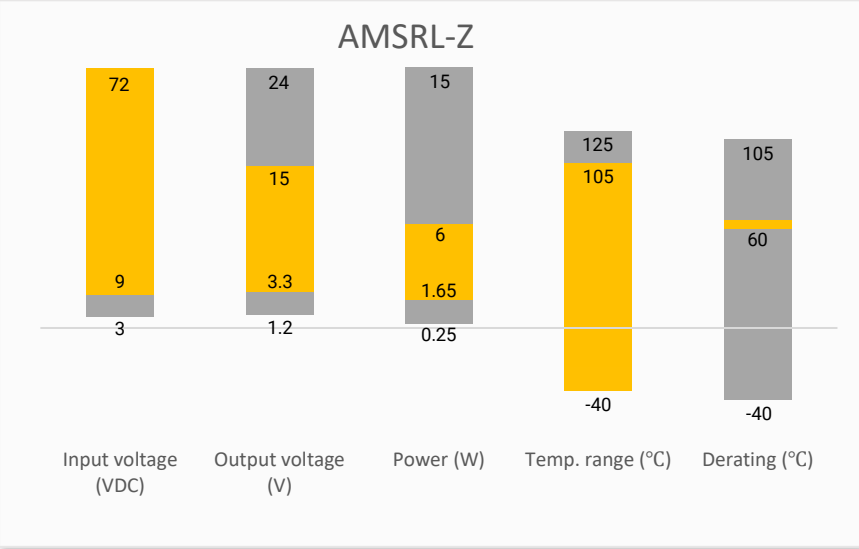

Training

Product Training Video (click to open)

Press Release

Coming Soon!

Application Notes

Applications

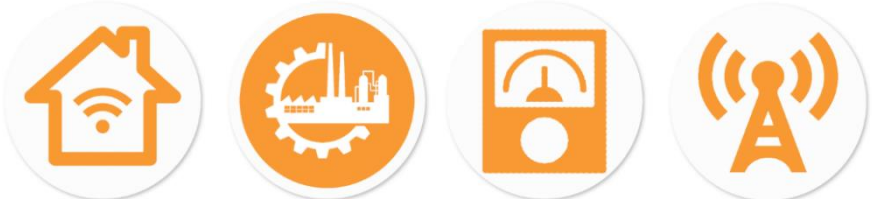

Models & Specifications

Single Output

Model	Input Voltage (VDC)	Output Voltage (VDC)	Input Current Max (mA)		Output Current Max (mA)	Maximum Capacitive Load (µF)	Efficiency (%) Full Load	
			No Load	Full Load			Vin (Min)	Vin (Max)
AMSRL-483.3Z	48 (9 ~ 72)	3.3	3	232	500	100	79	70
AMSRL-4805Z	48 (9 ~ 72)	5	3	323	500	100	86	74
AMSRL-486.5Z	48 (9 ~ 72)	6.5	3	406	500	100	89	78
AMSRL-487.2Z	48 (14 ~ 72)	7.2	3	289	500	100	89	81
AMSRL-4809Z	48 (14 ~ 72)	9	3	357	500	100	90	84
AMSRL-4812Z	48 (17 ~ 72)	12	3	384	500	100	92	86
AMSRL-4815Z	48 (21 ~ 72)	15	3	311	400	100	92	84

Note: Use suffix "TR" for tape & reel packing (ex. AMSRL-4815ZTR).

Input Specification

Parameters	Conditions	Typical	Maximum	Units
Voltage range	See models table			VDC
Filter	Capacitor Filter			
Absolute maximum rating	100ms max		75	VDC
Start up time		10		ms
Input reflected ripple current		35		mA pk-pk
On/Off Control	ON – Open circuit OFF – Pin10 connected to "GND" OFF idle current : 1mA max			

Output Specification

Parameters	Conditions	Typical	Maximum	Units
Voltage accuracy			±2.0	%
Output voltage adjustability (Trim)			±10	%
Line regulation	Full load, main input range		±1.0	%
Load regulation			±1.0	%
Short circuit protection	Continuous, Auto recovery			
Temperature coefficient	Full load		±0.02	%/°C
Ripple & Noise*	20MHz bandwidth		75	mV pk-pk
Transient recovery time	25% load step change(100% ~ 75% of Iout)	250		µS
Transient response deviation	25% load step change(100% ~ 75% of Iout)		±3	%

* Ripple and Noise are measured at 20MHz bandwidth by using a 0.1µF (M/C) and 10µF (E/C) parallel capacitor and typical input with full load

General Specifications

Parameters	Conditions	Typical	Maximum	Units
Switching frequency	100% load	150 ~ 550		KHz
Operating temperature	See derating graph	-40 to +105		°C
Storage temperature		-55 to +125		°C

Soldering temperature	1.5mm from case 10 sec max		260	°C
Reflow temperature	10 sec		245	°C
Lead-free reflow solder process	IPC/JEDEC J-STD-020D.1			
Cooling	Nature Convection (30~65 LFM)			
Humidity	Non-condensing		95	% RH
Moisture sensitivity level (MSL)	IPC/JEDEC J-STD-020D.1	Level 1		
Vibration	MIL-STD-810F			
Weight	1.8			g
Dimensions (L x W x H)	0.77 x 0.47 x 0.20 inches, 19.50 x 11.80 x 5.00mm			
MTBF	> 4 800 000 hrs (MIL-HDBK -217F, t=+25°C)			

Safety Specifications		
Parameters		
Standards	Design to meet IEC/EN 60950-1, 62368-1	
	EMC - Conducted and radiated emission	EN55032 , CLASS B with recommended circuit
	Electrostatic Discharge Immunity	IEC 61000-4-2 , Criteria A
	RF, Electromagnetic Field Immunity	IEC 61000-4-3 , Criteria A
	Electrical Fast Transient/Burst Immunity	IEC 61000-4-4 , Criteria A with recommended circuit
	Surge Immunity	IEC 61000-4-5 , Criteria A with recommended circuit
	RF, Conducted Disturbance Immunity	IEC 61000-4-6 , Criteria A
	PFMF	IEC 61000-4-8 , Criteria A

Derating

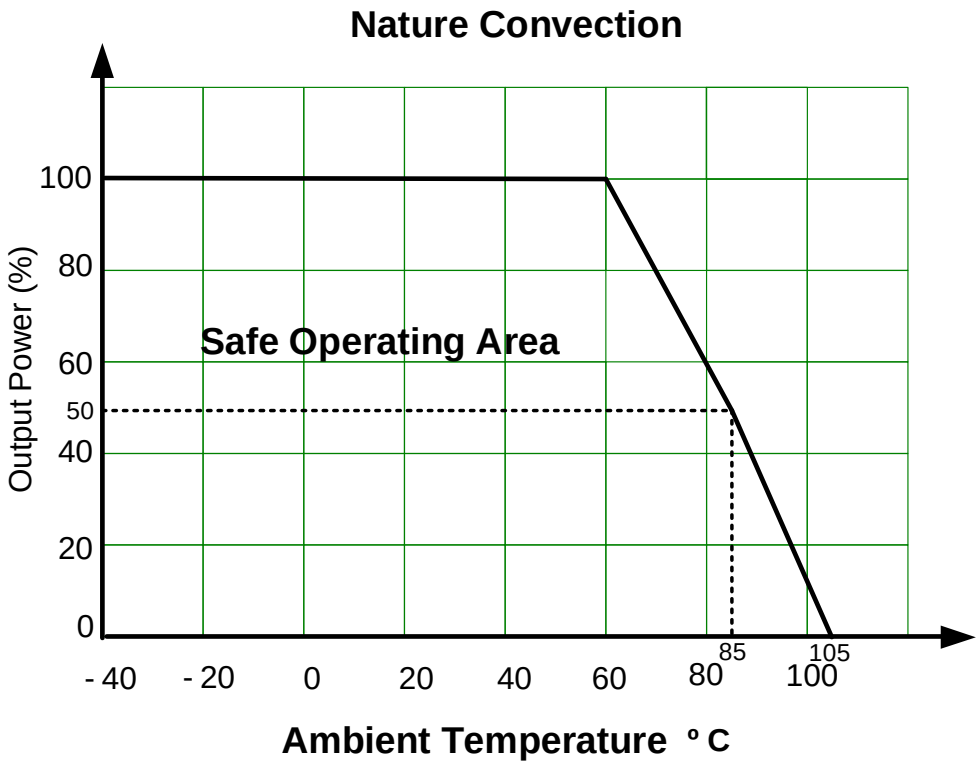

Input Reflected Ripple Current

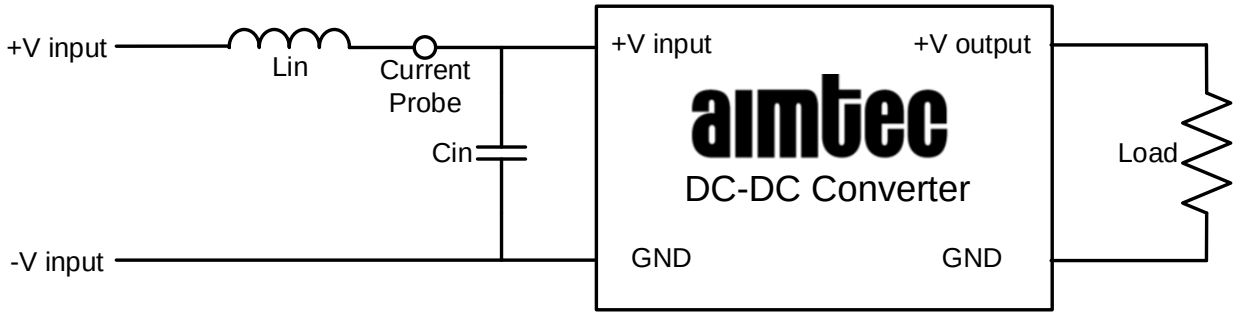

Lin : 12uH ; Cin : 10uF,ESR<1.0Ω at 100KHz

Typical Application Circuit

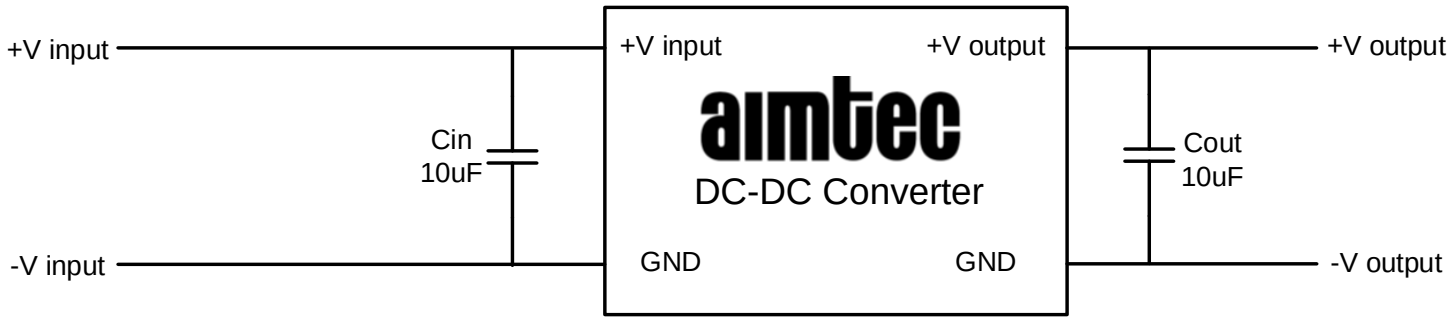

EMI Application Circuit

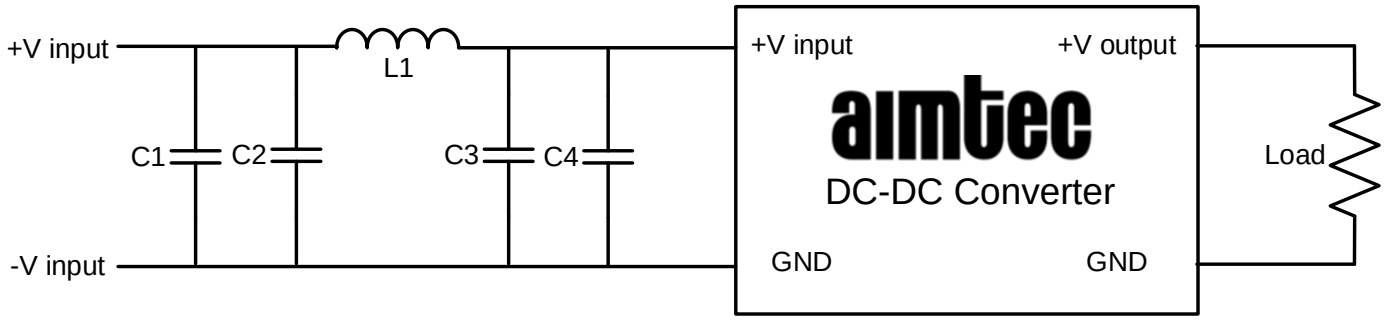

L1 : 56uH ; C1,C2,C3,C4 : 1206,2.2uF/100V

EFT & Surge Application Circuit

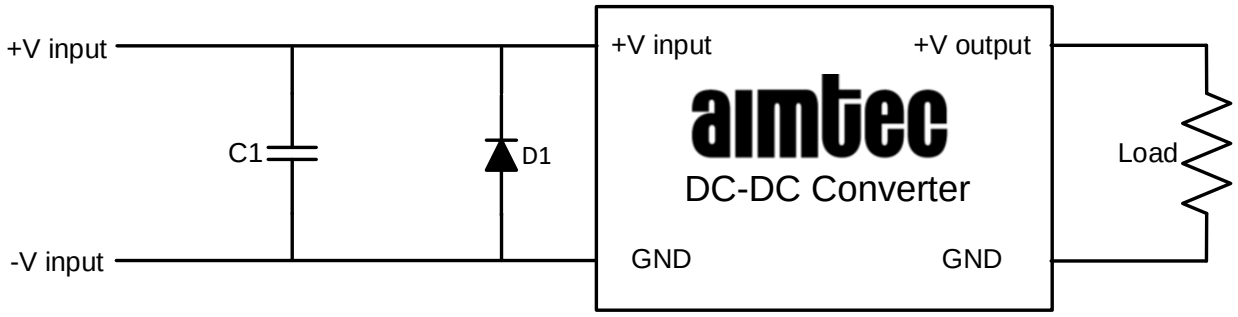

C1 : 330uH/100V ; D1 : SMDJ70A

Output voltage adjustment

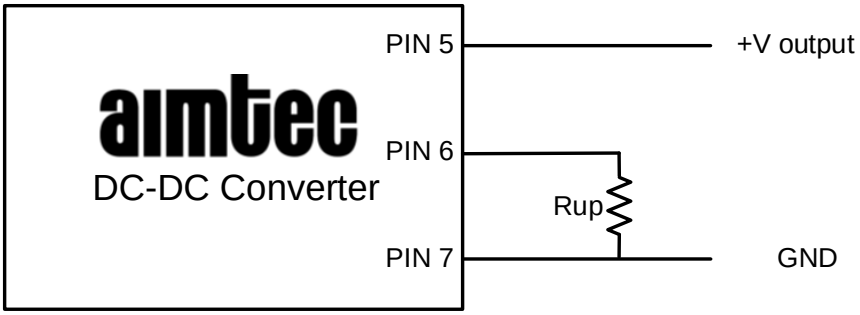

Pin 6 via a resistor to Pin 7(GND),Vo trim up.

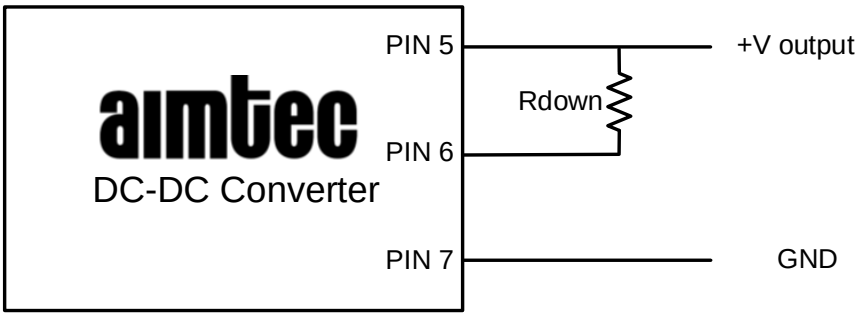

Pin 6 via a resistor to Pin 5(+Vout),Vo trim down.

Dimensions

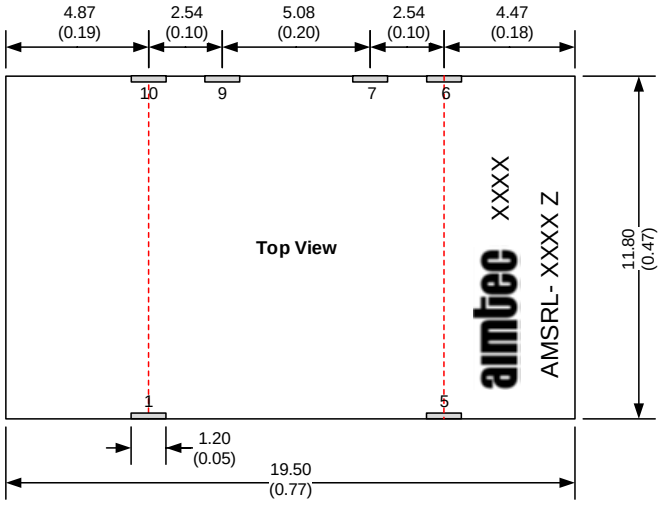

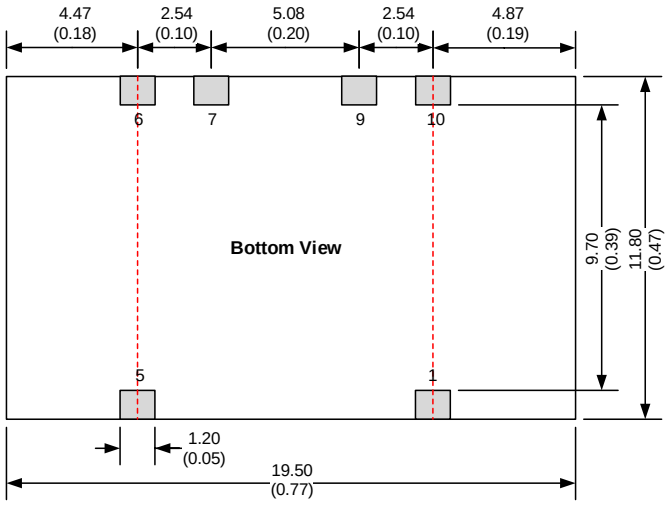

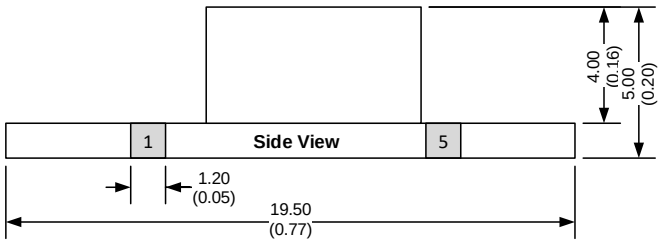

Notes:
All dimensions are typical in millimeters (inches).
Pin profile tolerance ±0.10 (±0.004)
Pin pitch tolerance ±0.25 (±0.01)
Stand-off tolerance ±0.50 (±0.02)

Pin Out Specifications	
Pin	Single
1	+V Input
5	+V Output
6	Trim
7	GND
9	GND
10	ON/OFF

NOTE: 1. Datasheets are updated as needed and as such, specifications are subject to change without notice. Once printed or downloaded, datasheets are no longer controlled by Aimtec; refer to www.aimtec.com for the most current product specifications. **2.** Product labels shown, including safety agency certifications on labels, may vary based on the date manufactured. **3.** Mechanical drawings and specifications are for reference only. **4.** All specifications are measured at an ambient temperature of 25°C, humidity<75%, nominal input voltage and at rated output load unless otherwise specified. **5.** Aimtec may not have conducted destructive testing or chemical analysis on all internal components and chemicals at the time of publishing this document. CAS numbers and other limited information are considered proprietary and may not be available for release. **6.** This product is not designed for use in critical life support systems, equipment used in hazardous environments, nuclear control systems or other such applications which necessitate specific safety and regulatory standards other the ones listed in this datasheet. **7.** Warranty is in accordance with Aimtec's standard Terms of Sale available at www.aimtec.com.