aimtec
Your Power Partner

Series AMSRL1-78JZ

Up to 12 Watt | DC-DC Switching Regulator



FEATURES:

- Switching Regulator
- Low Quiescent Current
- Wide Input
- Non-Isolated
- Adjustable Output Voltage
- High MTBF
- SMD Package
- Efficiency Up To 95%
- Remote On/Off
- Short Circuit Protection
- Meet EN 62368 Standard
- RoHS Compliant

RoHS

Models

Single output

Model	Input Voltage (V)	Output Voltage (V)	Output Current max (mA)	Efficiency Vin Max (%)	Efficiency Vin Min (%)
AMSRL1-781.5JZ	4.75-32	1.5	1000	66	76
AMSRL1-781.8JZ	4.75-32	1.8	1000	69	79
AMSRL1-782.5JZ	4.75-32	2.5	1000	74	86
AMSRL1-783.3JZ	6.5-36	3.3	1000	80	90
AMSRL1-7805JZ	8-36	5	1000	85	93
AMSRL1-786.5JZ	10-36	6.5	1000	86	93
AMSRL1-7809JZ	13-36	9	1000	90	94
AMSRL1-7812JZ	16-36	12	1000	92	95

NOTE: All specifications in this datasheet are measured at an ambient temperature of 25°C, humidity<75%, nominal input voltage and at rated output load unless otherwise specified.

Input Specifications

Parameters	Nominal	Typical	Maximum	Units
Voltage range	See Models table above			
On/Off Control	ON –open or 3.2V < Vc < 8V ; OFF –GND or 0V < VC < 0.8V , 200uA			
Quiescent Current	Vin = min to max at 0% load	0.2	1	mA

Output Specifications

Parameters	Conditions		Typical	Maximum	Units
Voltage accuracy	At 100% load	1.5/1.8/2.5/3.3V	±2	±4	%
		Others	±2	±3	
Short Circuit protection	Continuous, hiccup mode				
Short circuit restart	Auto-Recovery				
Dynamic load stability	25% load step change		±25	±100	mV
Transient recovery time	25% load step change		0.2	1	ms
Line voltage regulation	Vin=(LL-HL) at full load	1.5/1.8/2.5V	±0.3	±0.6	%
		Others	±0.2	±0.4	
Load voltage regulation	10-100% load	1.5/1.8/2.5V	±0.8	±1.5	%
		Others	±0.3	±0.6	
Temperature coefficient	-40°C to +85°C ambient		±0.03		%/ºC
Ripple & Noise	20MHz Bandwidth		30	75	mV p-p
Voltage adjustment range (Vadj)			±10		%Vout
Maximum Capacitive Load				680	uF

NOTE:
*1. Ripple and noise tested with “parallel cable” method;
*2. With the load lower than 20%, the maximum ripple will be 150mVp-p.

General Specifications

Parameters	Conditions		Typical	Maximum	Units
Switching frequency	100% load	1.5/1.8/2.5V	370		KHz
		3.3/5/6.5V	520		
		9/12V	700		

Operating temperature	With derating (see graph below)	-40 to +85		ºC
Storage temperature	-55 to +125			ºC
Maximum case temperature			100	oC
Cooling	Free Air Convection			
Humidity			95	% RH
Case material	Plastic (UL94-V0)			
Weight	1.7			g
Dimensions (L x W x H)	0.60 x 0.45 x 0.32 Inches 15.24 x 11.40 x 8.25 mm			
MTBF	> 2 000 000 hrs (MIL-HDBK-217F, Ground Benign, t=+25 oC)			
Maximum Soldering Temperature	1.5mm from case for 10 sec		245	ºC
Off idle current		0.2	1	mA

Safety Specifications

Parameters		
Standards	Information Technology Equipment	Design to meet EN 62368
	EMI - Conducted and radiated emission	CISPR32 / EN55032, class B (with the recommended EMI circuit)
	Electrostatic Discharge Immunity	IEC 61000-4-2, Contact ±4KV, Criteria B
	RF, Electromagnetic Field Immunity	IEC 61000-4-3, 10V/m, Criteria A
	Electrical Fast Transient / Burst Immunity	IEC 61000-4-4, ±1KV, Criteria B, with the recommended EMS circuit
	Surge Immunity	IEC 61000-4-5, L-L ±1KV, Criteria B, with the recommended EMS circuit
	RF, Conducted Disturbance Immunity	IEC 61000-4-6, 3 Vrms, Criteria A

Pin Out Specifications

Pin	Single
1	+V input
2	+V input
3	Ground
4	+V output
5	+V output
6	V adj
7	Ground
10	ON/OFF

Dimensions & PCB Foot Print

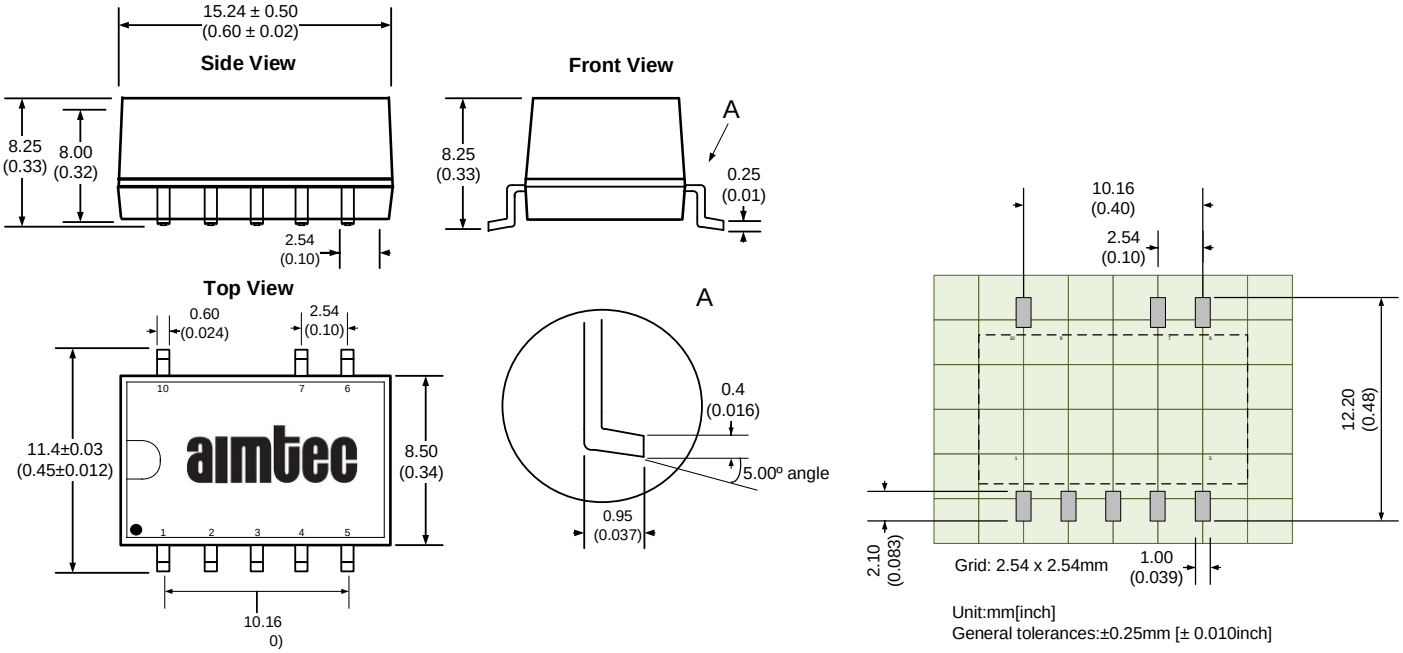

Derating

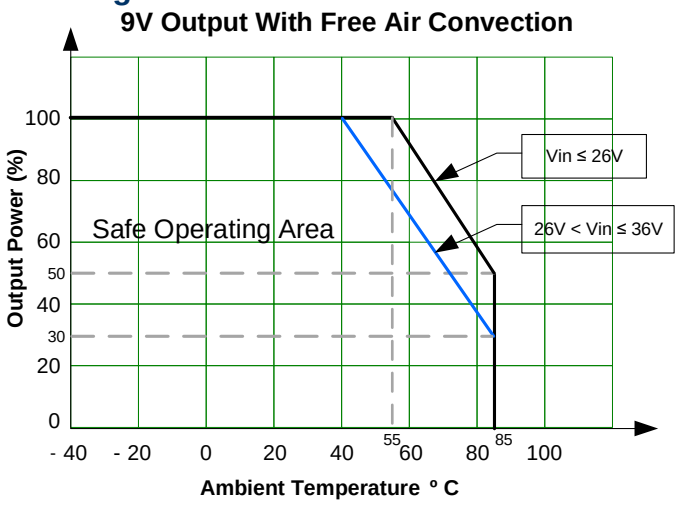

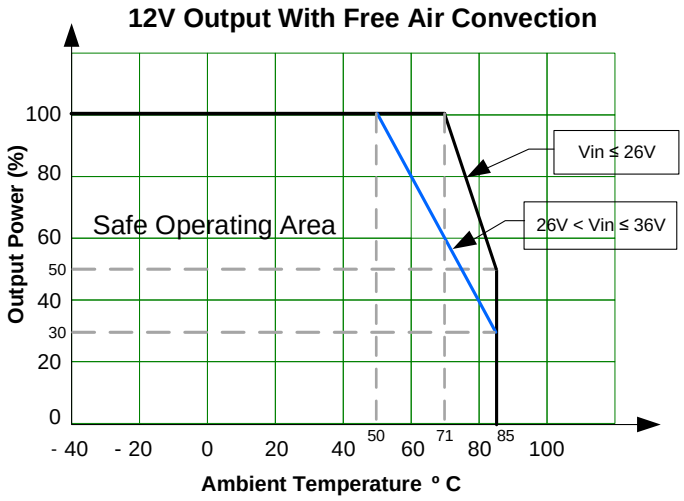

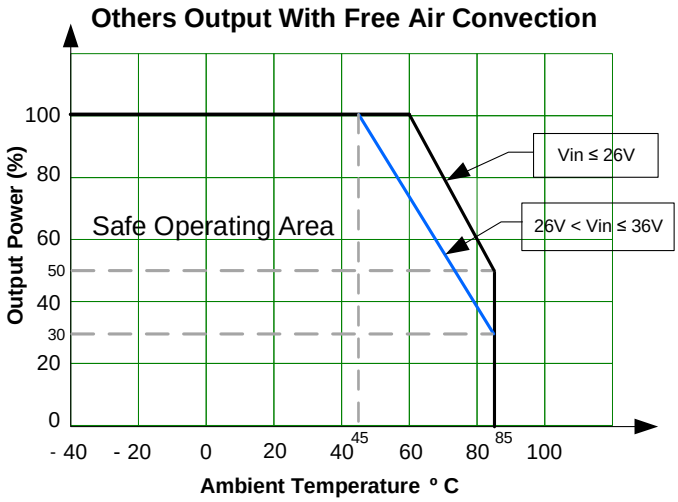

Application Circuit

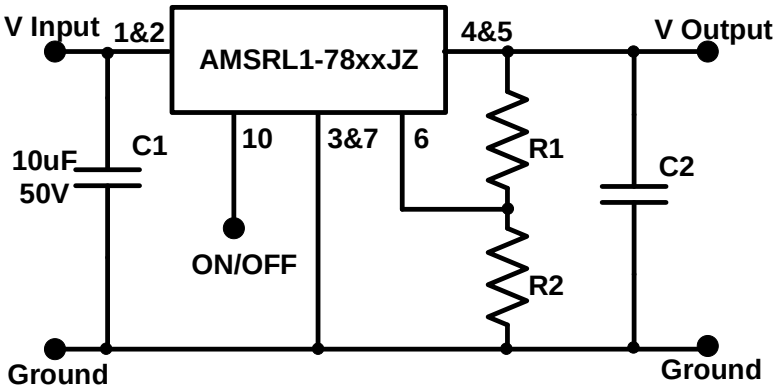

Model	C2 (uF)
1.5/1.8/2.5/3.3V output	22uF / 10V
5/6.5V output	22uF / 16V
9/12/15V output	22uF / 25V

LC filter Application Circuit

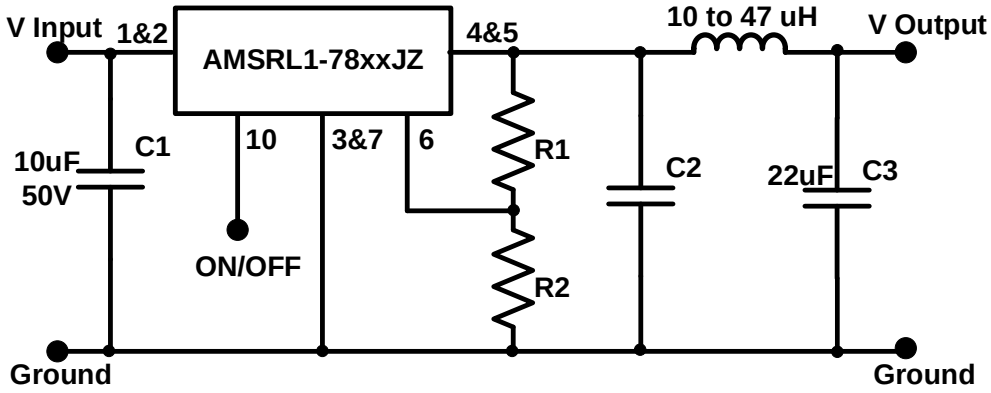

EMC Recommended Circuits

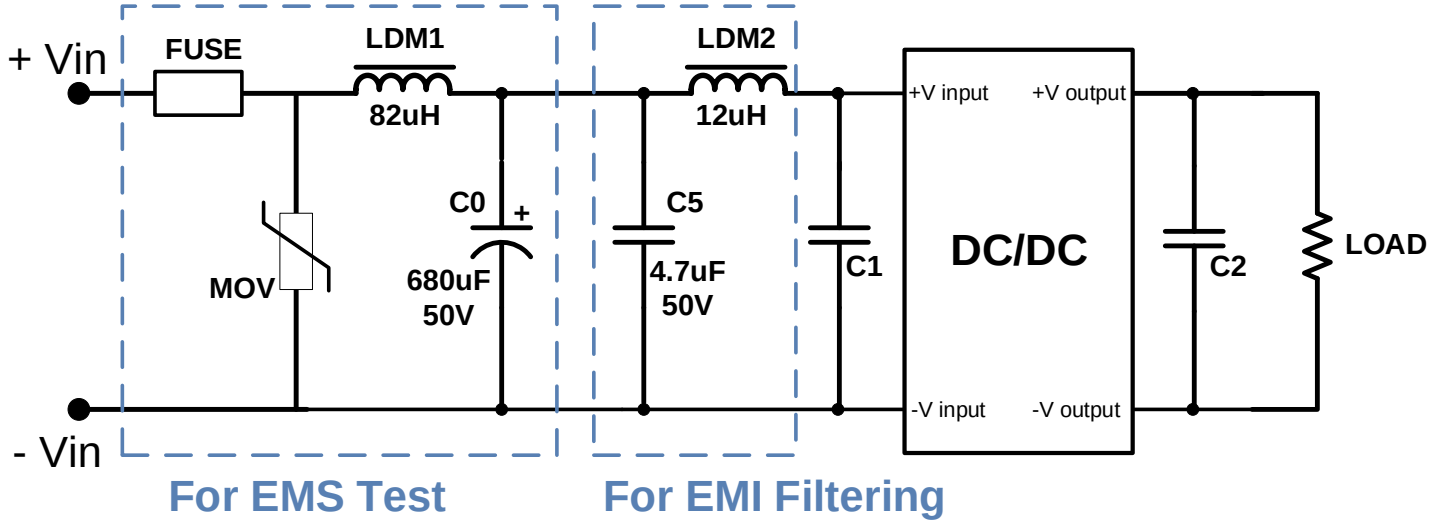

It is recommended that tantalum or low ESR electrolytic capacitors are used for C1 & C2.
C1 & C2 are required and should be installed as close to the converter as possible

Trimming

Output voltage can be externally trimmed by utilizing the methods as shown below

Fixed Resistor

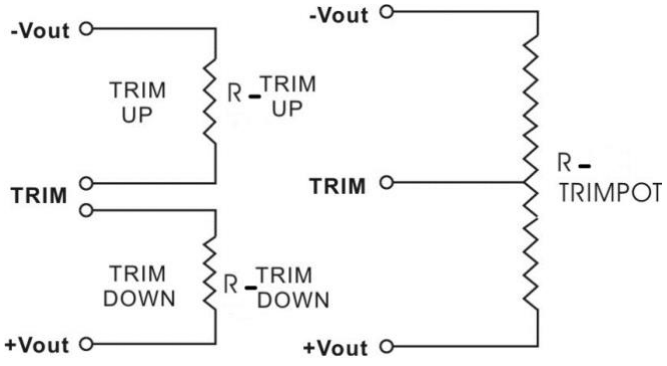

Variable Potentiometer

Leave open if not used.
Note: For the 1.5VDC output model is only support Vadj up, the Vadj down is unsupported.

AMSRL1-781.5JZ

Trim up %	1	2	3	4	5	6	7	8	9	10
Vout (VDC)	1.515	1.53	1.545	1.56	1.575	1.59	1.605	1.62	1.635	1.65
Rt up (KΩ)	360.00	172.50	110.00	78.75	60.00	47.50	38.57	31.88	26.67	22.50

AMSRL1-781.8-JZ

Trim down %	1	2	3	4	5	6	7	8	9	10
Vout (VDC)	1.782	1.764	1.746	1.728	1.71	1.692	1.674	1.656	1.638	1.62
Rt down (KΩ)	127.26	81.16	58.05	44.17	34.91	28.29	23.32	19.46	16.36	13.83
Trim up %	1	2	3	4	5	6	7	8	9	10
Vout (VDC)	1.82	1.836	1.854	1.872	1.89	1.908	1.926	1.944	1.962	1.98
Rt up (KΩ)	1931.95	191.03	91.61	58.70	42.28	32.45	25.89	21.22	17.71	14.98

AMSRL1-782.5-JZ

Trim down %	1	2	3	4	5	6	7	8	9	10
Vout (VDC)	2.475	2.45	2.425	2.4	2.375	2.35	2.325	2.3	2.275	2.25
Rt down (KΩ)	619.70	301.20	195.03	141.95	110.10	88.87	73.70	62.33	53.48	46.40
Trim up %	1	2	3	4	5	6	7	8	9	10
Vout (VDC)	2.525	2.55	2.575	2.6	2.625	2.65	2.675	2.7	2.725	2.75
Rt up (KΩ)	264.80	128.30	82.80	60.05	46.40	37.30	30.80	25.93	22.13	19.10

AMSRL1-783.3-JZ

Trim down %	1	2	3	4	5	6	7	8	9	10
Vout (VDC)	3.267	3.234	3.201	3.168	3.135	3.102	3.069	3.036	3.003	2.97
Rt down (KΩ)	4665.93	2483.43	1662.18	1231.39	966.07	786.25	656.34	558.08	481.17	419.33
Trim up %	1	2	3	4	5	6	7	8	9	10
Vout (VDC)	3.333	3.366	3.399	3.432	3.465	3.498	3.531	3.564	3.597	3.63
Rt up (KΩ)	2073.44	875.46	535.21	374.35	280.60	219.22	175.91	143.72	118.84	99.05

AMSRL1-7805-JZ

Trim down %	1	2	3	4	5	6	7	8	9	10
Vout (VDC)	4.95	4.9	4.85	4.8	4.75	4.7	4.65	4.6	4.55	4.5
Rt down (KΩ)	1773.00	1156.67	848.50	663.60	540.33	452.29	386.25	334.89	293.80	260.18
Trim up %	1	2	3	4	5	6	7	8	9	10
Vout (VDC)	5.06	5.1	5.15	5.2	5.25	5.3	5.35	5.4	5.45	5.5
Rt up (KΩ)	3192.00	612.00	289.50	182.00	128.25	96.00	74.50	59.14	47.63	38.67

AMSRL1-786.5-JZ

Trim down %	1	2	3	4	5	6	7	8	9	10
Vout (VDC)	6.435	6.37	6.305	6.24	6.175	6.11	6.045	5.98	5.915	5.85
Rt down (KΩ)	3284.64	1717.46	1149.32	855.82	676.58	555.75	468.78	403.18	351.94	310.81
Trim up %	1	2	3	4	5	6	7	8	9	10
Vout (VDC)	6.565	6.63	6.695	6.76	6.825	6.89	6.955	7.02	7.085	7.15
Rt up (KΩ)	553.16	244.37	151.32	106.45	80.03	62.63	50.30	41.10	33.98	28.31

AMSRL1-7809-JZ

Trim down %	1	2	3	4	5	6	7	8	9	10
Vout (VDC)	8.91	8.82	8.73	8.64	8.55	8.46	8.37	8.28	8.19	8.1
Rt down (KΩ)	3190.28	1719.75	1164.39	872.63	692.79	570.83	482.69	416.01	363.80	321.82
Trim up %	1	2	3	4	5	6	7	8	9	10
Vout (VDC)	9.09	9.18	9.27	9.36	9.45	9.54	9.63	9.72	9.81	9.9
Rt up (KΩ)	433.71	178.60	106.60	72.64	52.87	39.93	30.80	24.02	18.78	14.62

AMSRL1-7812-JZ

Trim down %	1	2	3	4	5	6	7	8	9	10
Vout (VDC)	11.88	11.76	11.64	11.52	11.4	11.28	11.16	11.04	10.92	10.8
Rt down (KΩ)	3329.00	1641.50	1079.00	797.75	629.00	516.50	436.14	375.88	329.00	291.50
Trim up %	1	2	3	4	5	6	7	8	9	10
Vout (VDC)	12.12	12.24	12.36	12.48	12.6	12.72	12.84	12.96	13.08	13.2
Rt up (KΩ)	215.00	102.50	65.00	46.25	35.00	27.50	22.14	18.13	15.00	12.50

If it is needed to adjust the output voltage higher or lower than the converter's nominal value use the table above to determine appropriate resistor values, insuring that the voltage is within the adjustment range for the converter used.
If no voltage adjustment is needed connect a 470pF ceramic capacitor from pin 6 to ground.

NOTE: 1. Datasheets are updated as needed and as such, specifications are subject to change without notice. Once printed or downloaded, datasheets are no longer controlled by Aimtec; refer to www.aimtec.com for the most current product specifications. **2.** Product labels shown, including safety agency certifications on labels, may vary based on the date manufactured. **3.** Mechanical drawings and specifications are for reference only. **4.** All specifications are measured at an ambient temperature of 25°C, humidity<75%, nominal input voltage and at rated output load unless otherwise specified. **5.** Aimtec may not have conducted destructive testing or chemical analysis on all internal components and chemicals at the time of publishing this document. CAS numbers and other limited information are considered proprietary and may not be available for release. **6.** This product is not designed for use in critical life support systems, equipment used in hazardous environments, nuclear control systems or other such applications which necessitate specific safety and regulatory standards other the ones listed in this datasheet. **7.** Warranty is in accordance with Aimtec's standard Terms of Sale available at www.aimtec.com.