AMSRL6-NZ

Click to ORDER samples



SMD

The AMSRL6-NZ series is a 6A non-isolated switching regulator. The output voltage is accurately adjustable from 0.75V to 5.0V with a single resistor, and the product is featured with high efficiency, fast transient response, input under-voltage, output short circuit and over-current protection. It meets CLASS B of CISPR32/EN55032 EMI standards with the recommended external filter. This series can be widely used in applications such as telecom, computer networking, power distributed architecture, workstations, servers and LANs/WANs. They also provide high current with fast transient response for high-speed chips such as FPGA, DSP, and ASIC.

The new 6A series has an operating temperature from -40°C to +85°C, meets EN62368 standard and delivers efficiencies up to 94%, eliminating the need for a heat sink and cutting additional design space and installation cost.

Features

- Input Voltage up to 15V
- Operating Temp: -40 °C to +85 °C
- Ultra-low no load input current: 1mA typ.
- Low ripple & noise, 35mV typ.
- Continuous short circuit, over current Protection
- Design to meet EN62368

RoHS

3yr Warranty

Summary

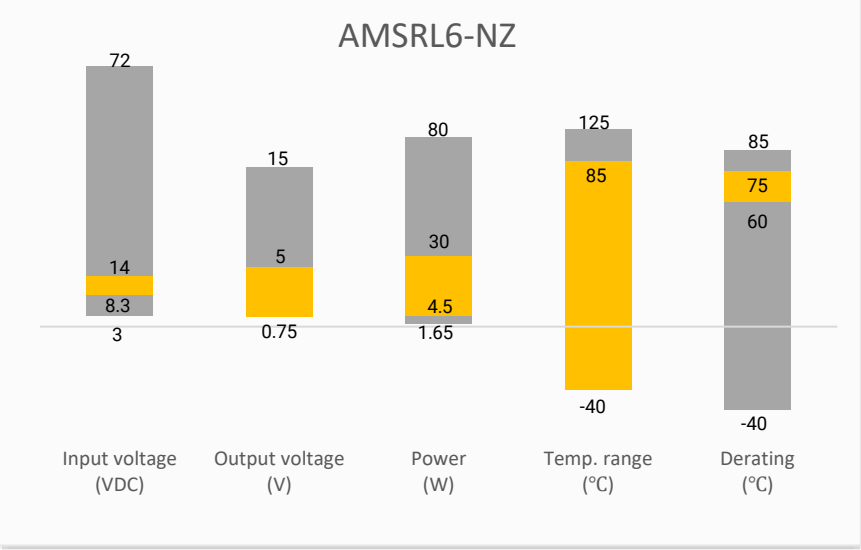

Training

Product Training Video (click to open)

Press Release

Coming Soon!

Application Notes

Applications



Models & Specifications

Single Output

Model	Input Voltage (VDC)	Output Voltage (VDC)	Output Current max (A)	Maximum Capacitive Load (µF)	Efficiency (%) Typ.
AMSRL6-PNZ	12 (8.3 - 14)	0.75 – 5.0	6	1000/3000*	94
AMSRL6-NNZ	12 (8.3 - 14)	0.75 – 5.0	6	1000/3000*	94

Note: "P" indicates that the Ctrl pin is positive logic control, "N" indicates that the Ctrl pin is negative logic control
***Maximum capacitive load is 3000µF when ESR ≥ 10mΩ, 1000µF when 1mΩ ≤ ESR ≤ 10mΩ**

Input Specification

Parameters	Conditions	Typical	Maximum	Units
Voltage range	12VDC Nominal	8.3 - 14	15	VDC
Input current	12VDC input, 100%load	2660		mA
	12VDC input, 0% load	20		
Start-up voltage			8	VDC
Under voltage lock out		≤6		VDC
Filter	Capacitor			
Quiescent Current	Positive output	1		mA
Reverse Polarity Input	Prohibited			
On/Off Control	Positive logic control	ON – Open or Vin-2.5VDC to Vin OFF – 0 to 0.5V		
	Negative logic control	OFF – Open or Vin-2.5VDC to Vin ON – 0 to 0.5V		

Output Specification

Parameters	Conditions	Typical	Maximum	Units
Voltage accuracy	100% load, 12VDC input	±1	±2	%
Line regulation	100% load, 12VDC input	±0.3		%
Load regulation	0-100% load, 12VDC input	±0.4		%
Short circuit protection	Continuous, Auto recovery			
Over current protection	12VDC input	160		% of Iout
Temperature coefficient	100% load	±0.02		%/°C
Ripple & Noise	20MHz bandwidth, 100% load, 12VDC input	35	75	mV pk-pk
Transient recovery time	50% load step change, with 2 x 150 µF capacitors	20		µS
Transient response deviation	50% load step change, with 2 x 150 µF capacitors	±70		mV
Trim		≥0.75	5	VDC

General Specifications

Parameters	Conditions	Typical	Maximum	Units
Switching frequency	100% load	350		KHz
Operating temperature	See derating graph	-40 to +85		°C

Storage temperature		-55 to +125		°C
Lead temperature	>217°C for less than 60s		245	°C
Lead-free reflow solder process	IPC/JEDEC J-STD-020D.1			
Cooling	Free air convection			
Humidity	Non-condensing		95	% RH
Weight		3.9		g
Dimensions (L x W x H)	0.80 x 0.45 x 0.26 inches (20.3 x 11.4 x 6.6 mm)			
MTBF	> 1000 000 hrs (MIL-HDBK -217F, t=+25°C)/Full Load			
All specifications in this datasheet are measured at an ambient temperature of 25°C, humidity<75%, nominal input voltage, 5VDC output voltage and rated output load unless otherwise specified.				

Safety Specifications		
Parameters		
Standards	EMI - Conducted and radiated emission	Design to meet CISPR32/EN55032, class B with recommend EMC circuit
	Information technology Equipment	Design to meet EN62368
	Electrostatic Discharge Immunity	IEC 61000-4-2 Contact ±6KV, Criteria B

Derating

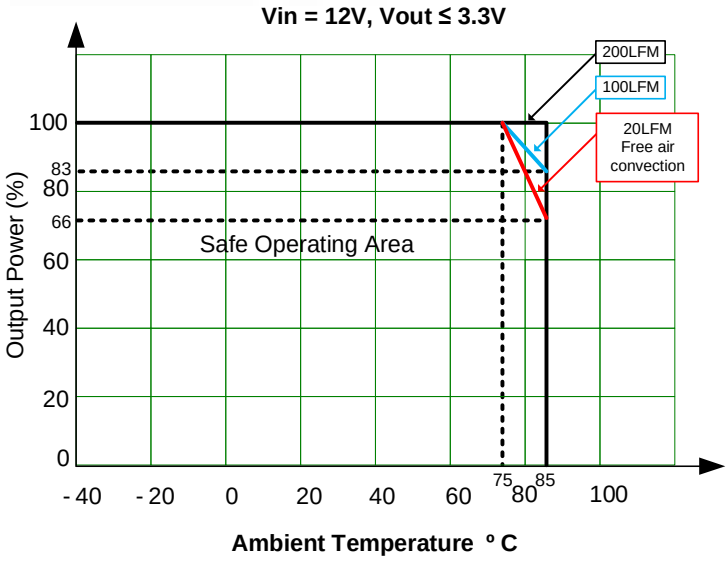

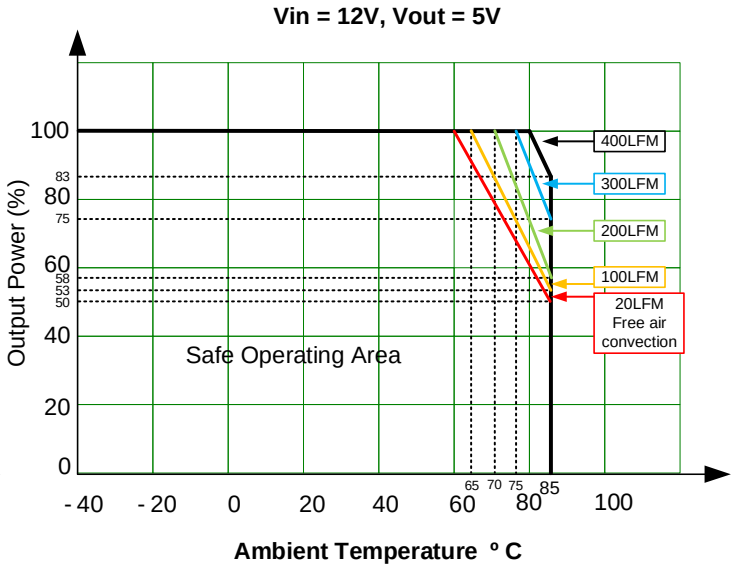

Typical Application Circuit

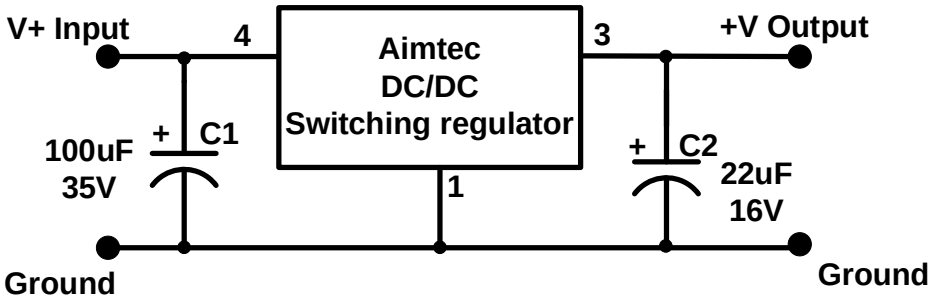

EMC Recommended Circuit

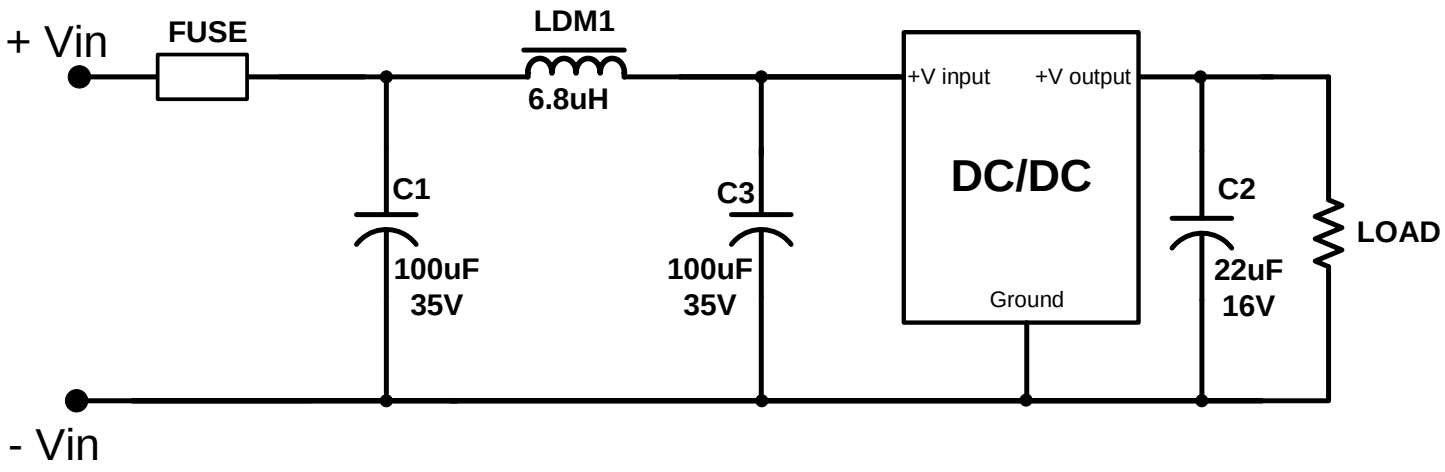

Trim Function

Trim resistor equation:



$$RT(\Omega) = \frac{7200}{V_{out} - 0.7525} - 1000$$

Vout (VDC)	RT (Ω)
0.7525	Open
1.2	15,089
1.8	5,873
2.5	3,120
3.3	1,826
5	695

Dimensions

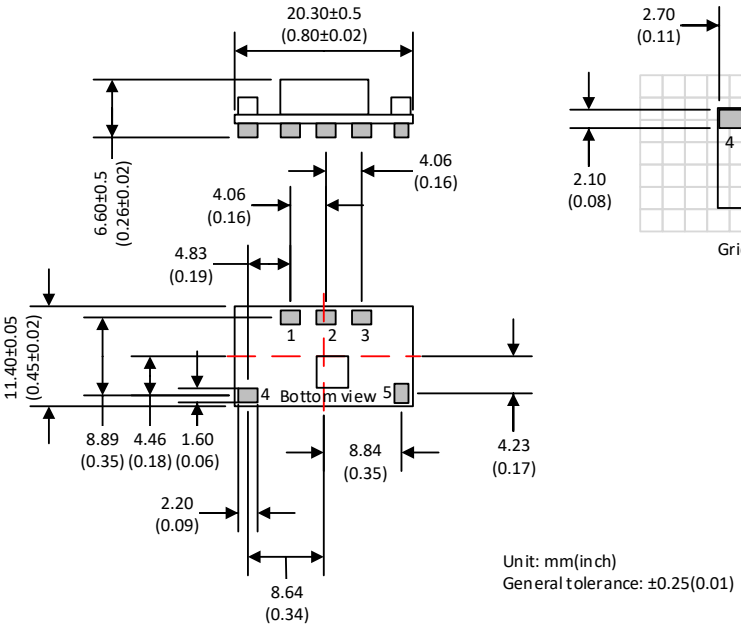

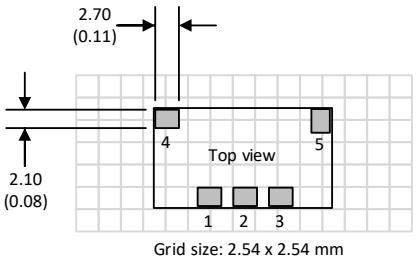

Pin Output Specifications	
Pin	Positive output
1	GND
2	Trim
3	+V Output
4	+V Input
5	On/Off control

NOTE: 1. Datasheets are updated as needed and as such, specifications are subject to change without notice. Once printed or downloaded, datasheets are no longer controlled by Aimtec; refer to www.aimtec.com for the most current product specifications. **2.** Product labels shown, including safety agency certifications on labels, may vary based on the date manufactured. **3.** Mechanical drawings and specifications are for reference only. **4.** All specifications are measured at an ambient temperature of 25°C, humidity<75%, nominal input voltage and at rated output load unless otherwise specified. **5.** Aimtec may not have conducted destructive testing or chemical analysis on all internal components and chemicals at the time of publishing this document. CAS numbers and other limited information are considered proprietary and may not be available for release. **6.** This product is not designed for use in critical life support systems, equipment used in hazardous environments, nuclear control systems or other such applications which necessitate specific safety and regulatory standards other the ones listed in this datasheet. **7.** Warranty is in accordance with Aimtec's standard Terms of Sale available at www.aimtec.com.