AMSROL-78NZ

Click to ORDER samples

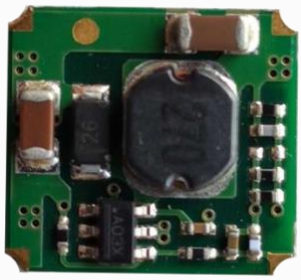

SMD

Aimtec's AMSROL-78NZ series was developed to meet increasing market demand for compact sizes and higher efficiency. This 0.5A switching regulator hits the mark on these metrics with its 12.50 x 13.50 x 3.50mm open frame, ultra-low height design and efficiency of up to 95%. It is also a viable replacement to the LM78 linear regulator.

The series feature an ultra-wide input voltage range of 4.75-36V, continuous short-circuit and low ripple noise (typ.: 20mV). These models target a diverse range of applications such as industrial controls, IoT, grid power, instrumentation, mining and other related industries where limited board space is a key concern. This new series can accommodate operating temperature from -40°C to +85°C with full power up to 71°C.

Features

- Input Range: 4.75VDC – 36VDC
- Operating Temp: -40 °C to +85 °C
- Low ripple & noise, up to 50mV(p-p) max
- Efficiency up to 95%
- ON/OFF control
- Output short circuit protection
- Regulated Output

RoHS

3yr Warranty

Summary

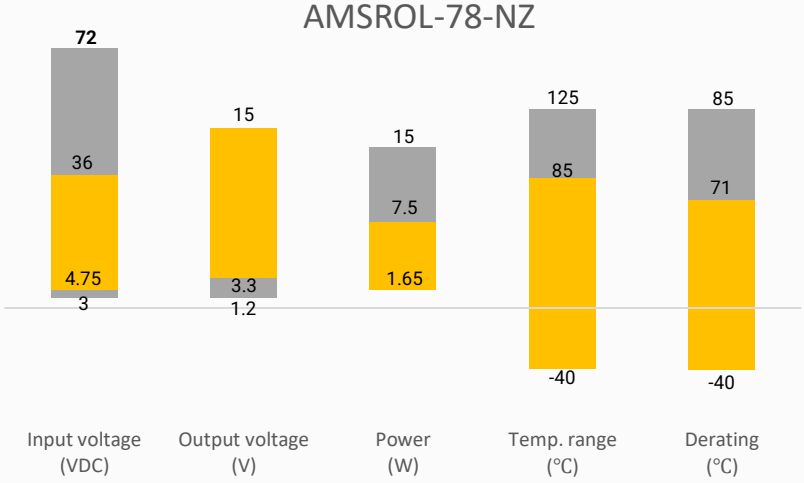

Training

Product Training Video (click to open)

Press Release

Coming Soon!

Application Notes

Applications

IoT

Industrial

Portable Equipment

Telecommunication

Models & Specifications

Single Output					
Model	Input Voltage (VDC)	Output Voltage (VDC)	Output Current Max (mA)	Maximum Capacitive Load (µF)	Efficiency (%) Full Load
AMSROL-783.3NZ	24 (4.75 ~ 36)	3.3	500	680	86
AMSROL-7805NZ	24 (6.5 ~ 36)	5	500	680	90
AMSROL-7809NZ	24 (12 ~ 36)	9	500	680	93
AMSROL-7812NZ	24 (15 ~ 36)	12	500	680	94
AMSROL-7815NZ	24 (19 ~ 36)	15	500	680	95
For input voltage exceeding 30 VDC, an input capacitor of 22uF/50V is required.					

Input Specification				
Parameters	Conditions	Typical	Maximum	Units
Voltage range	See models table			VDC
No load input current		0.2	1.5	mA
Filter	Capacitance filter			
Reverse polarity at input	Avoid / Not protected			
On/Off Control	ON – 3.2 to 8Vdc or open circuit OFF – 0 to 0.8Vdc or pin4 connected to "-V Input" OFF idle current 0.03mA typ. and 0.1mA max			
* The On/Off Control pin voltage is referenced to input GND.				

Output Specification					
Parameters	Conditions		Typical	Maximum	Units
Voltage accuracy	Full load	3.3V output model	± 2	± 4	%
		Others	± 2	± 3	
Line regulation	Full load		± 0.2	± 0.4	%
Load regulation	10 ~ 100% load	3.3V,5V output model	± 0.6		%
		Others	± 0.3		
Short circuit protection	Continuous, Auto recovery				
Temperature coefficient	Full load			± 0.03	%/°C
Ripple & Noise*	20MHz bandwidth	3.3V output, 20 ~ 100% load	20	50	mV pk-pk
		Others, 10 ~ 100% load	20	50	
Transient recovery time	25% load step change		200	1000	µS
Transient response deviation	25% load step change		± 50	± 200	mV
* With light loads at or below 20%, Ripple & Noise for 3.3V output model increase to 100mVp-p max, and a load below 10% for others model increase to 150mVp-p max					

General Specifications				
Parameters	Conditions	Typical	Maximum	Units
Switching frequency	Full load	700		KHz
Operating temperature	With derating at 71 °C	-40 to +85		°C
Storage temperature		-55 to +125		°C
Reflow soldering temperature	Peak temp ≦245℃, 60 sec max at 217℃, please refer to IPC/JEDEC J-STD-020D.1.			
Cooling	Free air convection			
Humidity	Non-condensing		95	% RH
Weight		0.9		g
Dimensions (L x W x H)	0.49 x 0.53 x 0.14 inches, 12.50 x 13.50 x 3.50mm			
MTBF	> 2 000 000 hrs (MIL-HDBK -217F, t=+25°C) / Full Load			

Safety Specifications		
Parameters		
Standards	Designed to meet EN 62368	
	EMC - Conducted and radiated emission	CISPR32/EN55032, CLASS B with recommended circuit
	Electrostatic Discharge Immunity	IEC 61000-4-2, Contact ±4KV, Criteria B
	RF, Electromagnetic Field Immunity	IEC 61000-4-3, 10V/m, Criteria A
	Electrical Fast Transient/Burst Immunity	IEC 61000-4-4, ±1KV, Criteria B with recommended circuit
	Surge Immunity	IEC 61000-4-5, line to line ±1KV, Criteria B with recommended circuit
	RF, Conducted Disturbance Immunity	IEC 61000-4-6, 3Vr.m.s, Criteria A

Derating

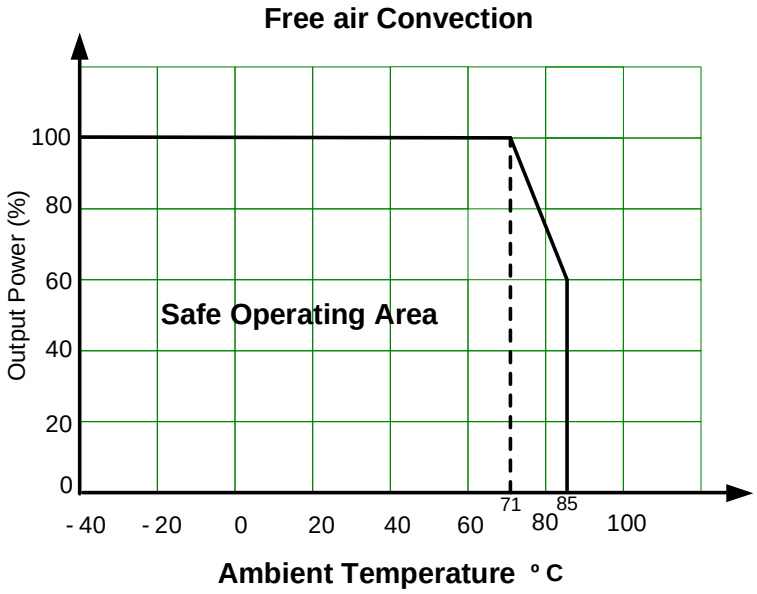

Typical Application Circuit

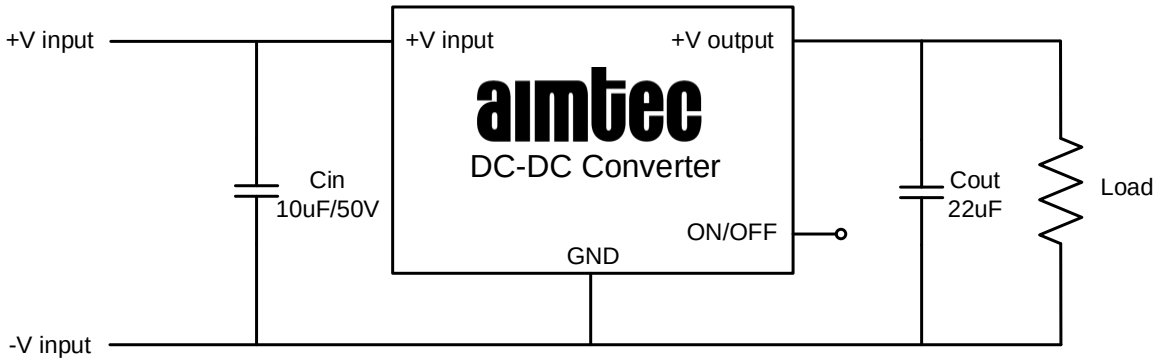

Note : To further reduce the output ripple and noise. We suggested the use of a "LC" filter at the output terminals, with an inductor value (L) of 10uH to 47uH.

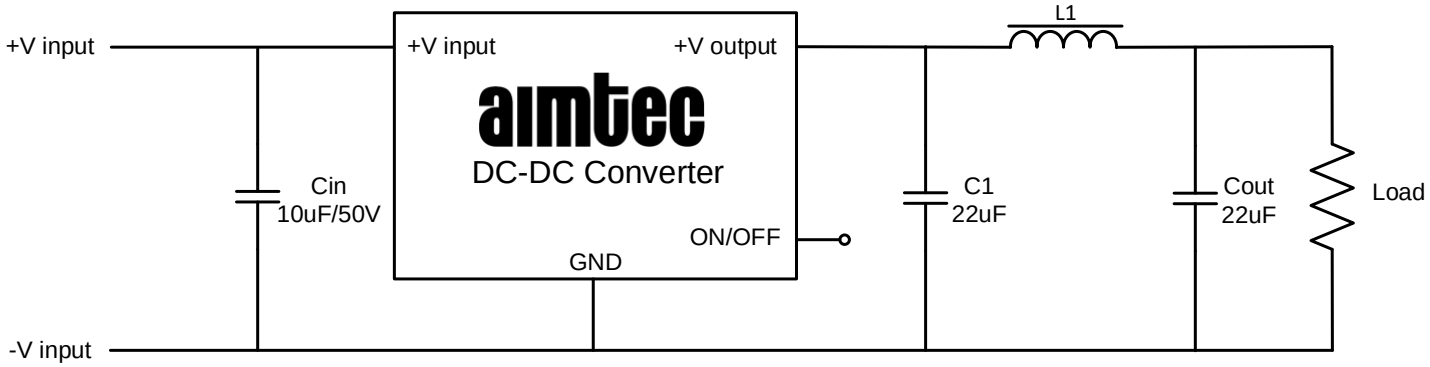

EMC Recommended Circuit

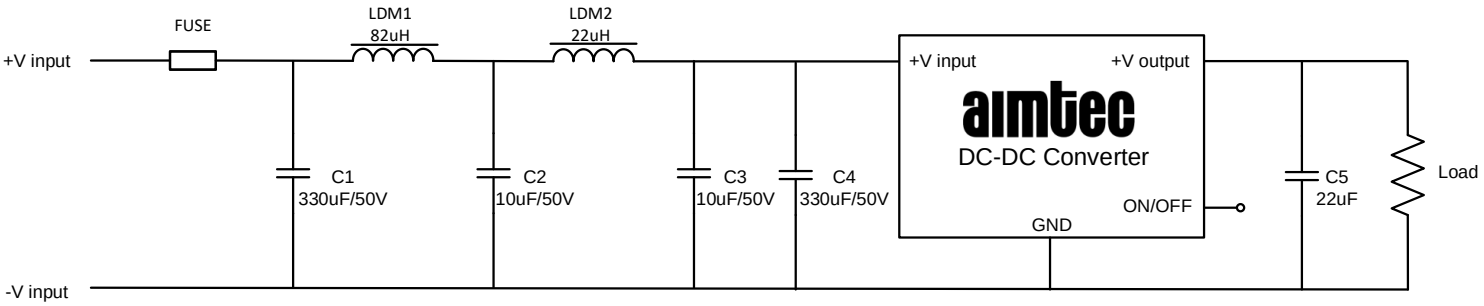

Fuse : Choose according to actual input current.

Dimensions

Top View

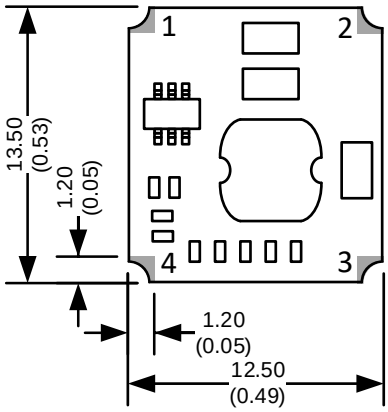

Right View

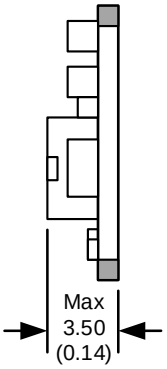

Bottom View

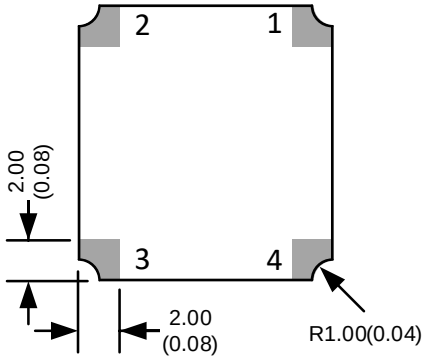

Notes:
All dimensions are typical in millimeters (inches).
General tolerance ±0.25 (±0.01)

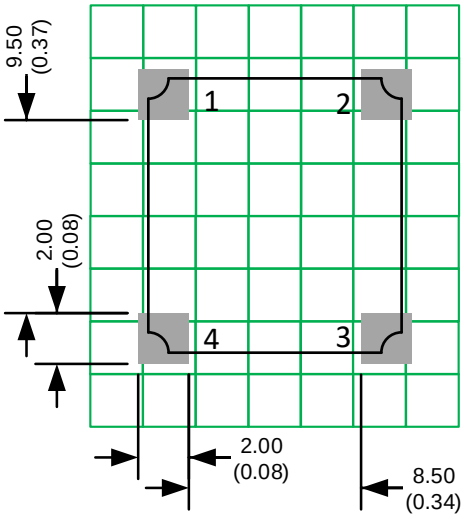

Note : Grid 2.54*2.54 mm

Pin Out Specifications	
Pin	Function
1	+V Input
2	-V Input
3	+V Output
4	ON/OFF

NOTE: 1. Datasheets are updated as needed and as such, specifications are subject to change without notice. Once printed or downloaded, datasheets are no longer controlled by Aimtec; refer to www.aimtec.com for the most current product specifications. **2.** Product labels shown, including safety agency certifications on labels, may vary based on the date manufactured. **3.** Mechanical drawings and specifications are for reference only. **4.** All specifications are measured at an ambient temperature of 25°C, humidity<75%, nominal input voltage and at rated output load unless otherwise specified. **5.** Aimtec may not have conducted destructive testing or chemical analysis on all internal components and chemicals at the time of publishing this document. CAS numbers and other limited information are considered proprietary and may not be available for release. **6.** This product is not designed for use in critical life support systems, equipment used in hazardous environments, nuclear control systems or other such applications which necessitate specific safety and regulatory standards other the ones listed in this datasheet. **7.** Warranty is in accordance with Aimtec's standard Terms of Sale available at www.aimtec.com.