APS11202

Chopper-Stabilized, Precision Hall-Effect Switch for Automotive, Consumer, and Industrial Applications

FEATURES AND BENEFITS

- Resistant to physical stress
- Superior temperature stability
- Output short-circuit protection
- Operation from unregulated supply
- Reverse battery protection
- Solid-state reliability
- Small package size
- AEC-Q100 automotive qualified

APPLICATIONS

- Industrial motor/encoders
- Commutation/index sensing
- BLDC motors
- Fan motors
- Power tools
- Home applications
- Industrial equipment

PACKAGES:

Not to scale



3-pin SOT23W
(suffix LH)



3-pin SIP
(suffix UA)

DESCRIPTION

The APS11202 Hall-effect switch is an extremely temperature-stable and stress-resistant sensor IC, especially suited for operation over extended temperature ranges (up to 150°C). Superior high-temperature performance is made possible through dynamic offset cancellation, which reduces the residual offset voltage normally caused by device package overmolding, temperature dependencies, and thermal stress.

The device includes, on a single silicon chip, a voltage regulator, a Hall voltage generator, a small-signal amplifier, chopper stabilization, a Schmitt trigger, and a short-circuit protected open-drain output to sink up to 25 mA. A south polarity magnetic field of sufficient strength is required to turn the output on. An onboard regulator permits operation with supply voltages in the range of 3 to 24 V.

Two package styles provide a magnetically optimized package for most applications: type LH is a miniature SOT23W low-profile surface-mount package, and type UA is a three-pin ultramini SIP for through-hole mounting. Both packages are lead (Pb) free with 100% matte-tin leadframe plating.

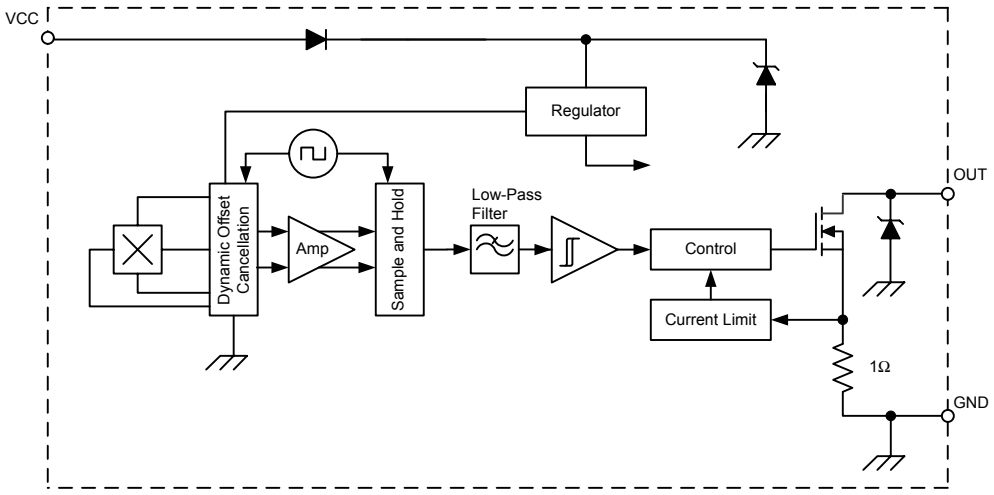

Functional Block Diagram

SPECIFICATIONS

SELECTION GUIDE

Part Number	Packing	Packaging	Branding	Ambient Temperature, T_A	B_{OP} (min)	B_{RP} (max)
APS11202LLHALX	13-in. reel, 10000 pieces/reel	3-Pin Surface-Mount SOT23W	AA4	–40°C to 150°C	5 G	75 G
APS11202LLHALT	7-in. reel, 3000 pieces/reel	3-Pin Surface-Mount SOT23W	AA4	–40°C to 150°C	5 G	75 G
APS11202LUAA[1]	Bulk, 500 pieces/bag	3-Pin Through-Hole SIP	AA4	–40°C to 150°C	5 G	75 G

[1] Contact Allegro for availability.

ABSOLUTE MAXIMUM RATINGS

Characteristic	Symbol	Notes	Rating	Units
Supply Voltage	V_{CC}		26.5	V
Reverse Battery Voltage	V_{RCC}		–20	V
Output Off Voltage	V_{OUT}		26	V
Continuous Output Current	I_{OUT}	Device provides internal current limiting to help protect itself from output short circuits	25	mA
Reverse Output Current	I_{ROUT}		–50	mA
Magnetic Flux Density	B		Unlimited	G
Operating Ambient Temperature	T_A	Range K	–40 to 150	°C
Maximum Junction Temperature	T_J(max)		165	°C
Storage Temperature	T_{stg}		–65 to 170	°C

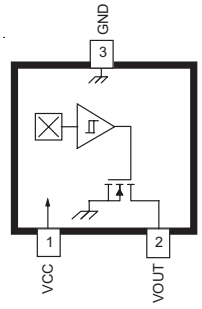

Package LH, 3-Pin SOT23W Pinout Diagram

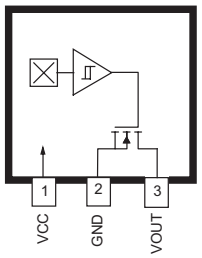

Package UA, 3-Pin SIP Pinout Diagram

Terminal List

Name	Number		Function
	LH	UA	
VCC	1	1	Power supply
OUT	2	3	Output
GND	3	2	Ground

Allegro MicroSystems
955 Perimeter Road
Manchester, NH 03103-3353 U.S.A.
www.allegromicro.com

ELECTRICAL CHARACTERISTICS [1]: Over operating temperature range, unless otherwise noted

Characteristic	Symbol	Test Conditions	Min.	Typ. [2]	Max	Units
Supply Voltage Range [3]	V_{CC}	Operating, T_J < 165°C	3.0	–	24	V
Output Leakage Current	I_{OFF}	V_{OUT} = 24 V, B < B_{RP}	–	–	10	µA
Output Saturation Voltage	$V_{OUT(SAT)}$	I_{OUT} = 20 mA, B > B_{OP}	–	185	500	mV
Output Current Limit	I_{ON}	B > B_{OP}	30	–	60	mA
Power-On Time	t_{PO}	V_{CC} > 3.0 V	–	–	25	µs
Chopping Frequency	f_C		–	800	–	kHz
Output Rise Time	t_R	R_{LOAD} = 820 Ω, C_{LOAD} = 20 pF	–	0.2	2.0	µs
Output Fall Time	t_F	R_{LOAD} = 820 Ω, C_{LOAD} = 20 pF	–	0.1	2.0	µs
Supply Current	I_{CC}	B < B_{RP}, V_{CC} = 12 V	–	2.0	3.0	mA
		B > B_{OP}, V_{CC} = 12 V	–	2.0	3.0	mA
Reverse Battery Current	I_{RCC}	V_{RCC} = –20 V	–	–	–5.0	mA
Zener Voltage	V_Z + V_D	I_{CC} = 15 mA, T_A = 25°C	28	–	–	V
Zener Impedance	Z_Z + Z_D	I_{CC} = 15 mA, T_A = 25°C	–	50	–	Ω

[1] Specifications guaranteed by design and verified by characterization. Not tested in production.
[2] Typical data at T_A = 25°C, 12 V.
[3] Maximum V_{CC} must be derated for power dissipation and junction temperature. See application information.

MAGNETIC CHARACTERISTICS [4] [5]: Over V_{CC} range, unless otherwise noted

Characteristic	Symbol	Test Conditions	Min.	Typ.	Max.	Units
Operate Point [6]	B_{OP}	T_A = –40°C, 25°C, $T_{A(max)}$	–	35	75	G
Release Point [7]	B_{RP}	T_A = –40°C, 25°C, $T_{A(max)}$	5	25	–	G
Hysteresis (B_{OP} – B_{RP})	B_{HYS}	T_A = 25°C and $T_{A(max)}$	–	10	70	G
		T_A = –40°C, 25°C, $T_{A(max)}$	–	–	70	G

[4] The positive polarity symbol (+) indicates south magnetic field, and the negative polarity symbol (–) indicates north magnetic field.
[5] Specifications guaranteed by design and verified by characterization. Not tested in production.
[6] Required polarity observed and transition of magnetic gradient through B_{OP}. See “Functional Description”.
[7] Required polarity observed and transition of magnetic gradient through B_{RP} after B_{OP} . See “Functional Description”.

Allegro MicroSystems
955 Perimeter Road
Manchester, NH 03103-3353 U.S.A.
www.allegromicro.com

THERMAL CHARACTERISTICS: May require derating at maximum conditions; see application information

Characteristic	Symbol	Test Conditions [1]	Value	Units
Package Thermal Resistance	$R_{\theta JA}$	Package LH, 1-layer PCB with copper limited to solder pads	228	°C/W
		Package LH, 2-layer PCB with 0.463 in.^{2} of copper area each side connected by thermal vias	110	°C/W
		Package UA, 1-layer PCB with copper limited to solder pads	165	°C/W

[1] Additional thermal information available on Allegro website.

Power Derating Curve

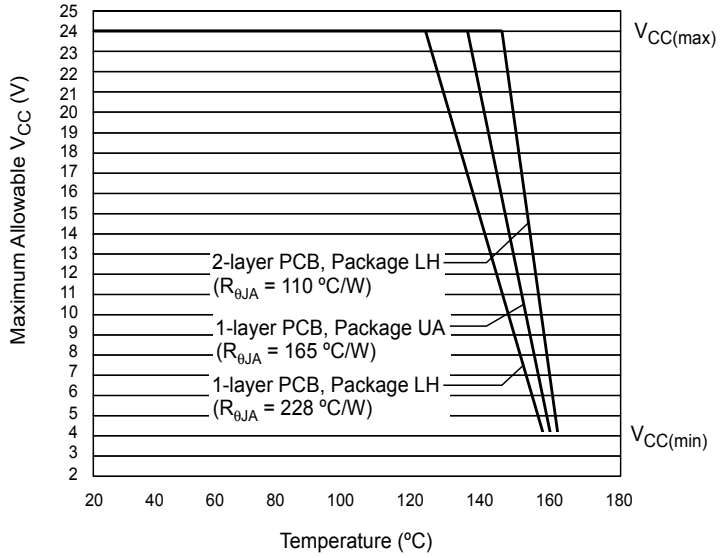

Power Dissipation versus Ambient Temperature

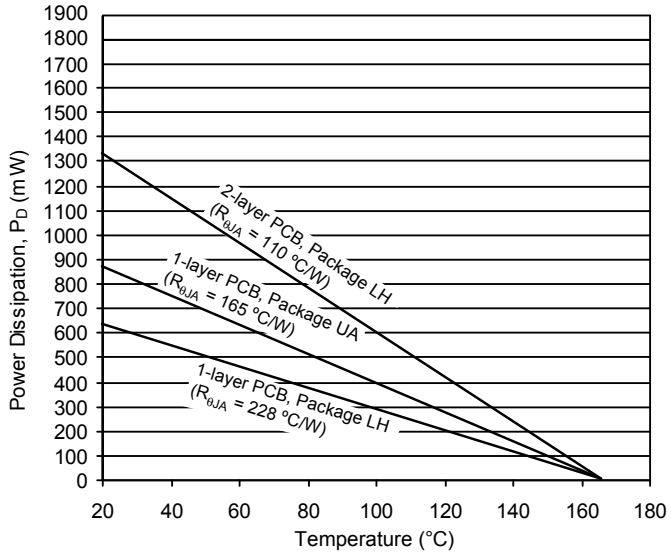

Allegro MicroSystems
955 Perimeter Road
Manchester, NH 03103-3353 U.S.A.
www.allegromicro.com

CHARACTERISTIC PLOTS

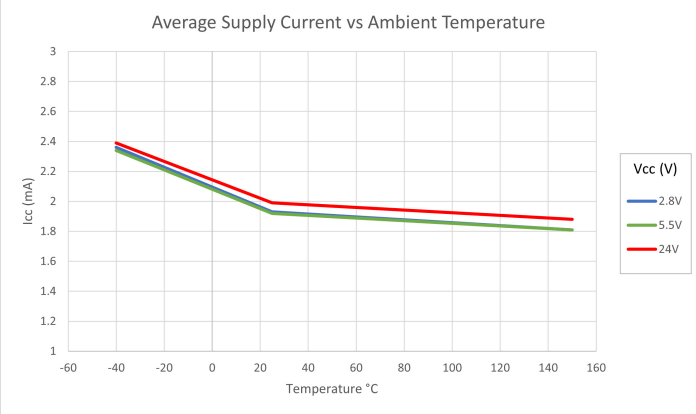

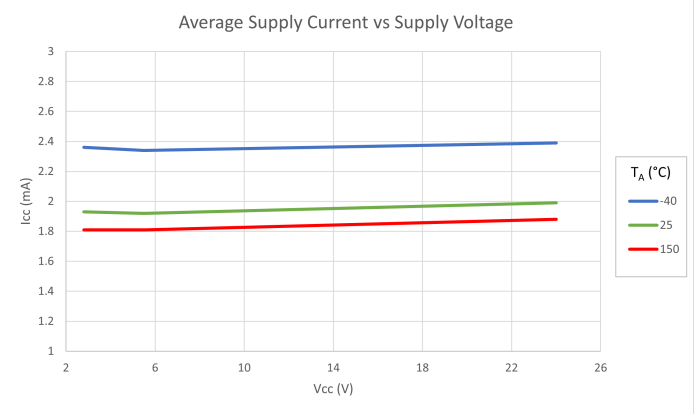

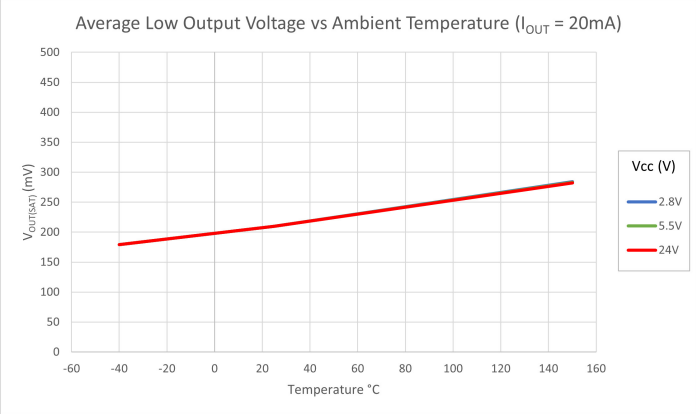

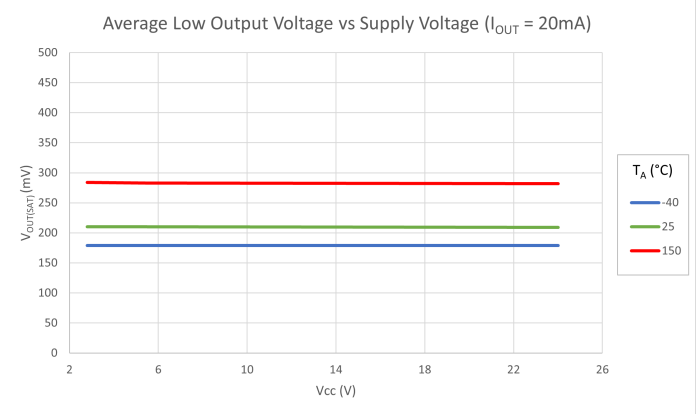

Allegro MicroSystems
955 Perimeter Road
Manchester, NH 03103-3353 U.S.A.
www.allegromicro.com

CHARACTERISTIC PLOTS (continued)

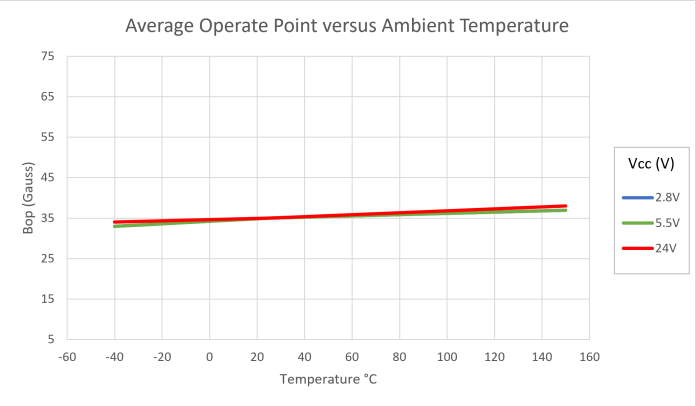

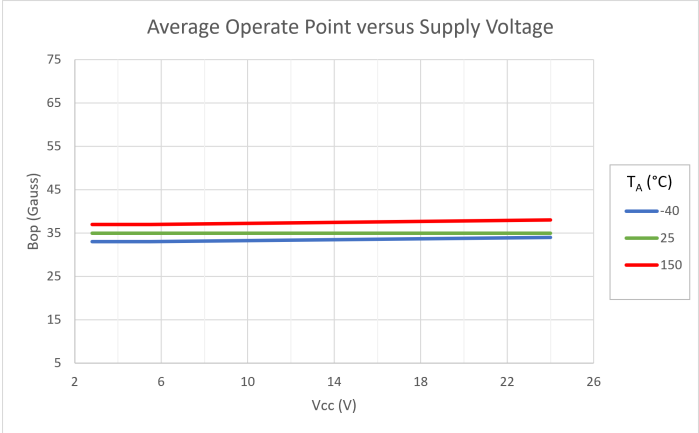

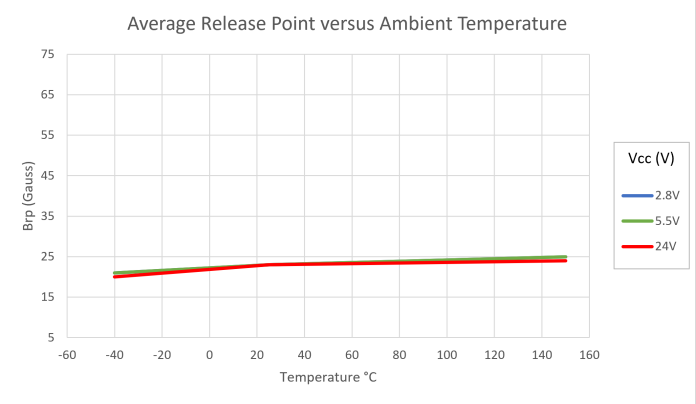

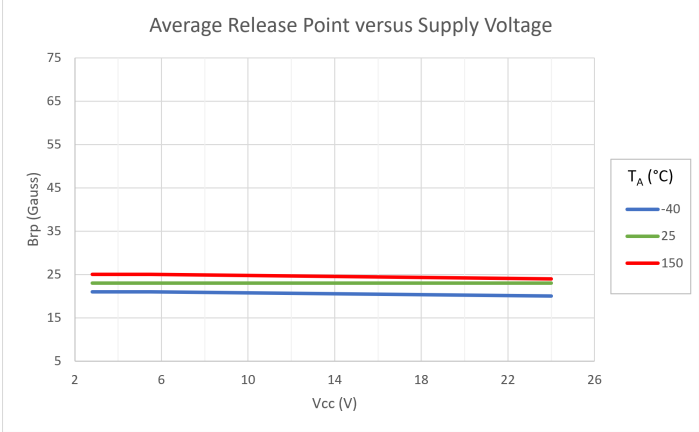

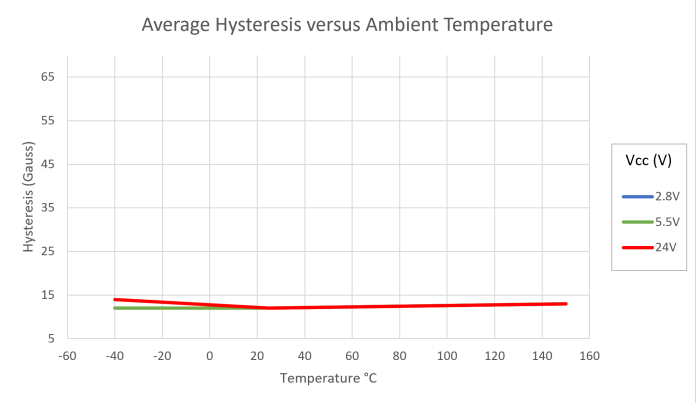

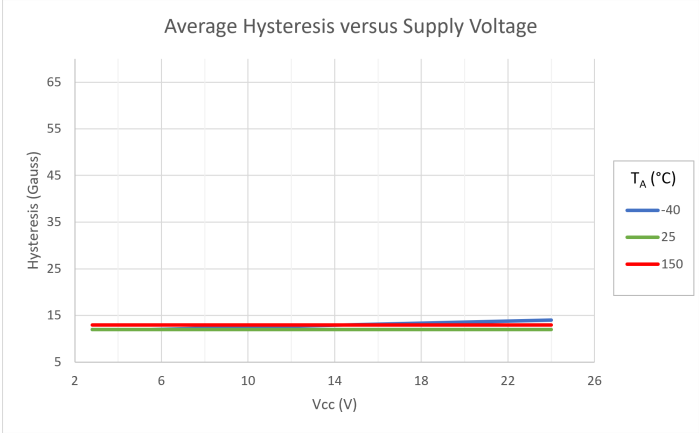

Allegro MicroSystems
955 Perimeter Road
Manchester, NH 03103-3353 U.S.A.
www.allegromicro.com

FUNCTIONAL DESCRIPTION

Chopper-Stabilized Technique

The Hall element can be considered as a resistor array similar to a Wheatstone bridge. A basic circuit is shown in Figure 1, demonstrating the effect of the magnetic field flux density (B) impinging on the Hall element. When using Hall-effect technology, a limiting factor for switch point accuracy is the small signal voltage (V_{HALL}) developed across the Hall element. This voltage is disproportionally small relative to the offset that can be produced at the output of the Hall device, caused by device overmolding, temperature dependencies, and thermal stress.

A large portion of the offset is a result of the mismatching of these resistors. The APS11202 uses a dynamic offset cancellation technique, with an internal high-frequency clock, to reduce the residual offset. The chopper-stabilizing technique cancels the mismatching of the resistor circuit by changing the direction of the current flowing through the Hall element (refer to Figure 2). To do so, CMOS switches and Hall voltage measurement taps are used, while maintaining V_{HALL} signal that is induced by the external magnetic flux.

The signal is then captured by a sample-and-hold circuit and further processed using low-offset bipolar circuitry. This technique produces devices that have an extremely stable quiescent Hall output voltage, are immune to thermal stress, and have precise recoverability after temperature cycling. This technique will also slightly degrade the device output repeatability. A relatively high sampling frequency is used in order to process faster signals.

More detailed descriptions of the circuit operation can be found on the Allegro website, including: Technical Paper STP 97-10, *Monolithic Magnetic Hall Sensing Using Dynamic Quadrature Offset Cancellation*, and Technical Paper STP 99-1, *Chopper-Stabilized Amplifiers with a Track-and-Hold Signal Demodulator*.

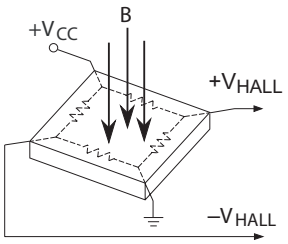

Figure 1: Hall Element, Basic Circuit Operation

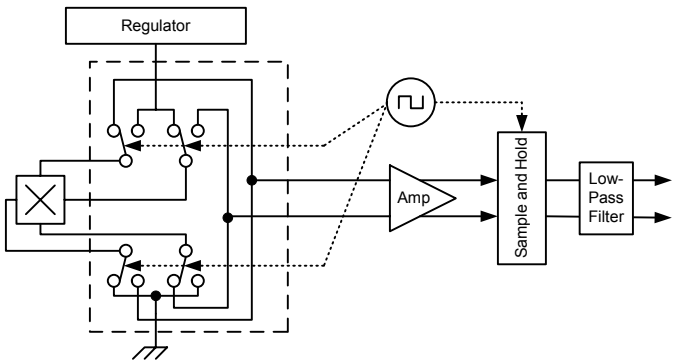

Figure 2: Chopper Stabilization Circuit (Dynamic Quadrature Offset Cancellation)

Operation

The output of the APS11202 switches low (turns on) when a magnetic field perpendicular to the Hall element transitions through and exceeds the Operate Point threshold (B_{OP}). This is illustrated in Figure 3. After turn-on, the output is capable of sinking 25 mA, and the output voltage reaches $V_{OUT(SAT)}$.

Note that after a south (+) polarity magnetic field of sufficient strength impinging on the branded face of the device turns on the device, the device remains on until the magnetic field is reduced below the Release Point threshold (B_{RP}). At that transition, the device output goes high (turns off). The difference in the magnetic operate and release points is the hysteresis (B_{HYS}) of the device. This built-in hysteresis allows clean switching of the output, even in the presence of external mechanical vibration and electrical noise.

When the device is powered on, if the ambient magnetic field has an intensity that is between B_{OP} and B_{RP}, the initial output state is indeterminate. The first time that the level of B either rises through B_{OP}, or falls through B_{RP}, however, the correct output state is obtained.

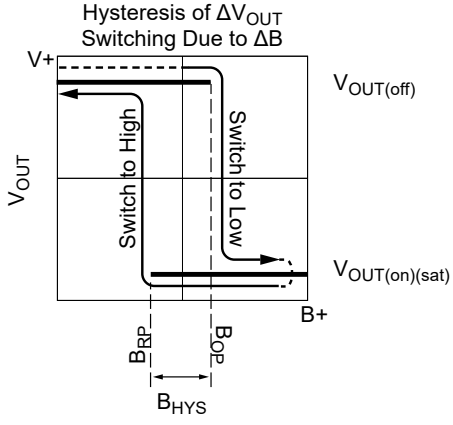

Figure 3: Output Voltage Responds to Sensed Magnetic Flux Density

ALLEGRO microsystems

Allegro MicroSystems
955 Perimeter Road
Manchester, NH 03103-3353 U.S.A.
www.allegromicro.com

APPLICATION INFORMATION

It is strongly recommended that an external bypass capacitor be connected (in close proximity to the Hall element) between the supply and ground of the device to reduce both external noise and noise generated by the chopper stabilization technique. This configuration is shown in Figure 4.

The simplest form of magnet that will operate these devices is a ring magnet. Other methods of operation, such as linear magnets, are possible.

The device must be operated below the maximum junction temperature of the device ($T_{J(max)}$). Under certain combinations of peak conditions, reliable operation may require derating supplied power or improving the heat dissipation properties of the application. The Package Thermal Resistance ($R_{\theta JA}$) is a figure of merit summarizing the ability of the application and the device to dissipate heat from the junction (die), through all paths to the ambient air. Its primary component is the Effective Thermal Conductivity (K) of the printed circuit board, including adjacent devices and traces. Radiation from the die through the device case ($R_{\theta JC}$) is relatively small component of $R_{\theta JA}$. Ambient air temperature (T_A) and air motion are significant external factors, damped by overmolding. Sample power dissipation results are given in the Thermal Characteristics section. Additional thermal data is also available on the Allegro website.

Extensive applications information for Hall-effect devices is available in: *Hall-Effect IC Applications Guide*, Application Note 27701 and *Guidelines for Designing Subassemblies Using Hall-Effect Devices*, Application Note 27703.1.

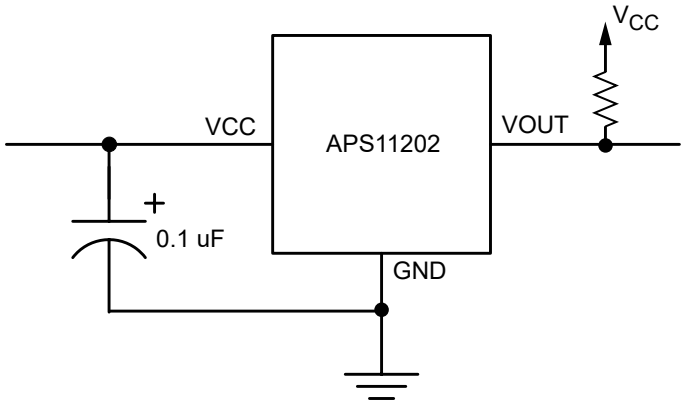

Figure 4: Typical Basic Application Circuit
A bypass capacitor is highly recommended.

Allegro MicroSystems
955 Perimeter Road
Manchester, NH 03103-3353 U.S.A.
www.allegromicro.com

PACKAGE OUTLINE DRAWINGS

For Reference Only – Not for Tooling Use

(Reference Allegro DWG-0000628, Rev. 1)
NOT TO SCALE
Dimensions in millimeters
Dimensions exclusive of mold flash, gate burrs, and dambar protrusions
Exact case and lead configuration at supplier discretion within limits shown

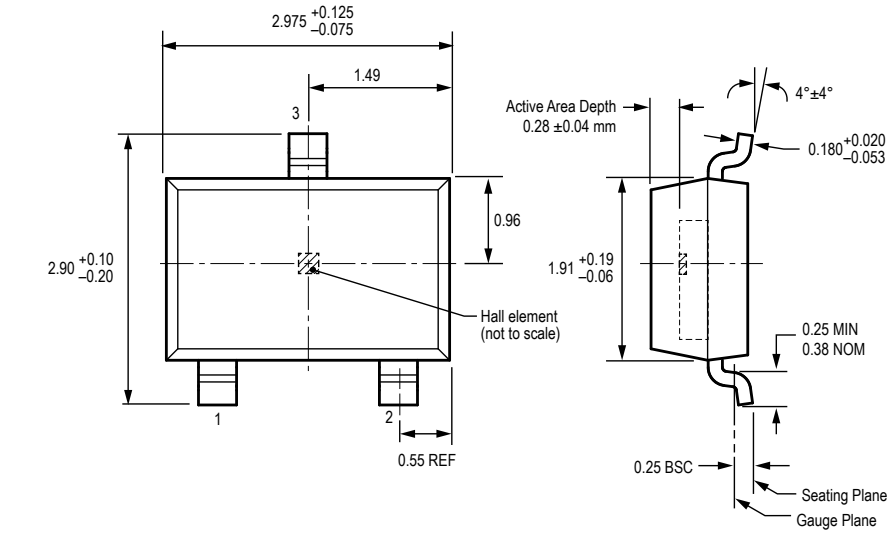

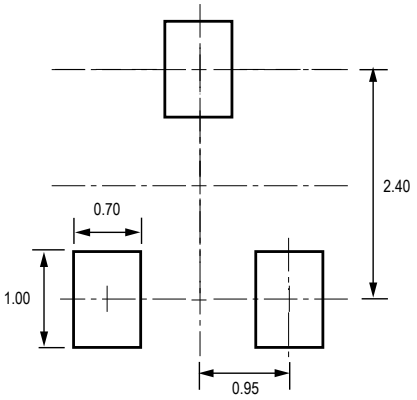

PCB Layout Reference View

All pads a minimum of 0.20 mm from all adjacent pads; adjust as necessary to meet application process requirements and PCB layout tolerances

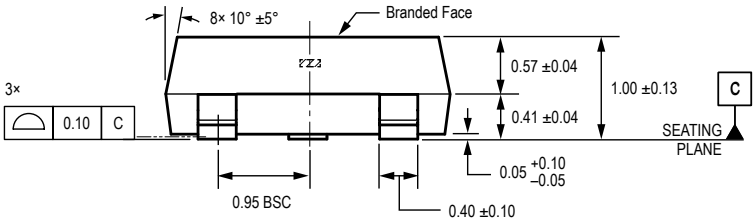

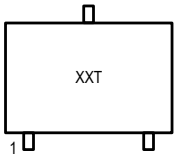

Standard Branding Reference View

Line 1 = 3 characters

Line 1: Last 2 digits of Part Number, Temperature Code

Branding scale and appearance at supplier discretion

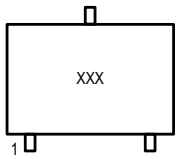

Standard Branding Reference View

Line 1 = 3 characters

Line 1: Last 3 digits of Part Number

Branding scale and appearance at supplier discretion

Figure 5: Package LH, 3-Pin SOT23W

Allegro MicroSystems
955 Perimeter Road
Manchester, NH 03103-3353 U.S.A.
www.allegromicro.com

For Reference Only – Not For Tooling Use

(Reference DWG-0000404, Rev. 1)
NOT TO SCALE
Dimensions in millimeters
Exact case and lead configuration at supplier discretion within limits shown

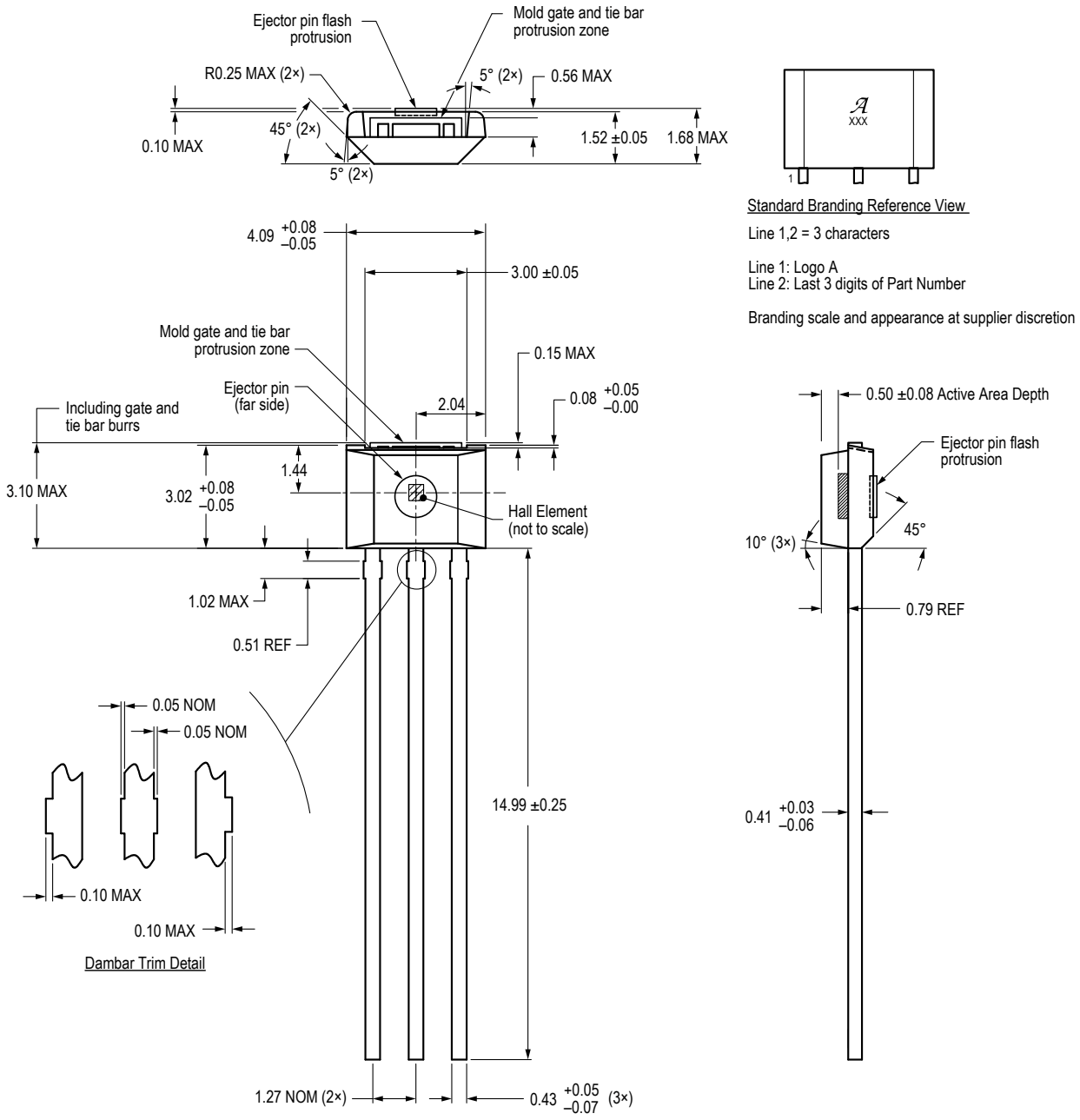

Figure 6: Package UA, 3-Pin SIP

Allegro MicroSystems
955 Perimeter Road
Manchester, NH 03103-3353 U.S.A.
www.allegromicro.com

Revision History

Number	Date	Description
–	March 15, 2023	Initial release
1	July 18, 2023	Added availability footnote to UA package in selection guide (page 2)

Copyright 2023, Allegro MicroSystems.

Allegro MicroSystems reserves the right to make, from time to time, such departures from the detail specifications as may be required to permit improvements in the performance, reliability, or manufacturability of its products. Before placing an order, the user is cautioned to verify that the information being relied upon is current.

Allegro's products are not to be used in any devices or systems, including but not limited to life support devices or systems, in which a failure of Allegro's product can reasonably be expected to cause bodily harm.

The information included herein is believed to be accurate and reliable. However, Allegro MicroSystems assumes no responsibility for its use; nor for any infringement of patents or other rights of third parties which may result from its use.

Copies of this document are considered uncontrolled documents.

For the latest version of this document, visit our website:

www.allegromicro.com

Allegro MicroSystems
955 Perimeter Road
Manchester, NH 03103-3353 U.S.A.
www.allegromicro.com