Issue: 1 Issue Date: 4/18/2016 Effective Date: 5/18/2016

Drawing

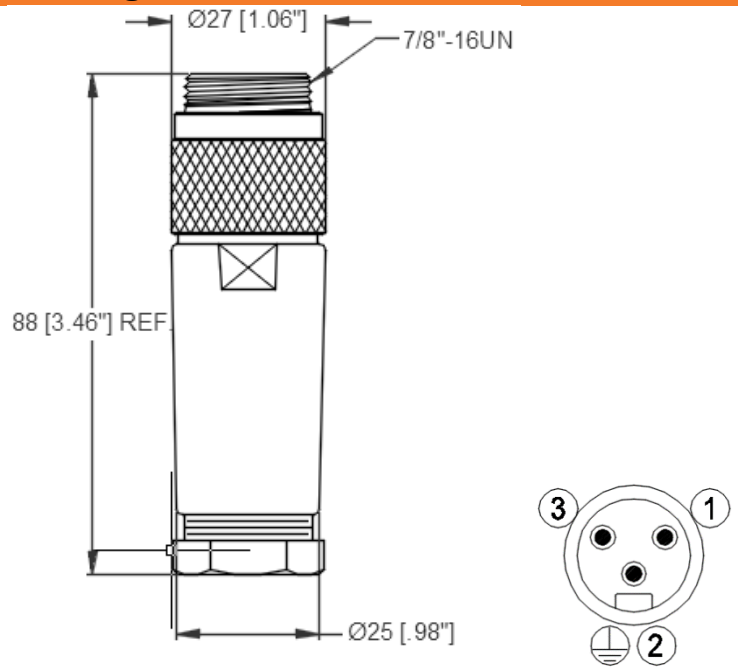

Technical Data

Part Number	Cable Diameter Range
219LR11	0.315" – 0.394" (8.0 – 10.0 mm)
219LR13	0.394" – 0.472" (10.0 – 12.0 mm)
219LR16	0.472" – 0.551" (12.0 – 14.0 mm)
219LR9	0.236" – 0.315" (6.0 – 8.0 mm)
Mechanical	
Housing	Polyamide
Insert	Polyurethane
Contact	Copper Alloy, Gold Plated
Coupling Nut	Aluminum, anodized black
O-Ring	NBR
Connection	Screw Terminal
Max AWG	16 ($1.5mm^2$)
Electrical	
Contact Resistance	≤ 5 mΩ
Nom. Current @ 40°C	12 A
Nominal Voltage	240 V
Rated Voltage	250 V
Test Voltage	2.5 kV eff./60 s
Insulation Resistance	> 10^9 Ω

UL File	E485156 (Except 219LR9)
Environmental	
Degree of Protection	IP 67/ NEMA 6P
Operating Temperature Range	-40C (-40F)/ +90C (+194F)
CE	All materials used in the manufacture of this part meet the requirements of European Directive 2011/65/EU regarding the restriction of use of certain hazardous substances in electrical and electronic equipment. Exemption used; 6a.
REACH Regulation (EC 1907/2006)	This product does not contain Substances of Very High Concern (SVHC) listed on the European Union's REACH candidate list in excess of 0.1% mass of the item.
Ordering Information	
219LR11 NC032	Each
219LR13 NC032	Each
219LR16 NC032	Each
219LR9 NC032	Each

Although Alpha Wire ("Alpha") makes every reasonable effort to ensure their accuracy at the time of this publication, information and specifications described herein are subject to error or omission and to change without notice, and the listing of such information and specifications does not ensure product availability. Alpha provides the information and specification herein on an "AS IS" basis, with no representations or warranties, whether express, statutory or implied. In no event will Alpha be liable any damages (including consequential, indirect, incidental, special, punitive, or exemplary damages) whatsoever, even if Alpha has been advised of the possibility of such damages, whether in an action under contact, negligence or any other theory, arising out of or in connection with the use, or inability to use, the information or specification described herein.

Issue: 1 issue Date: 8/4/2016 Effective Date: 8/4/2016