# SPPH1 1.5mm-travel Vertical Type

## Vertical push switch with two types of knob available

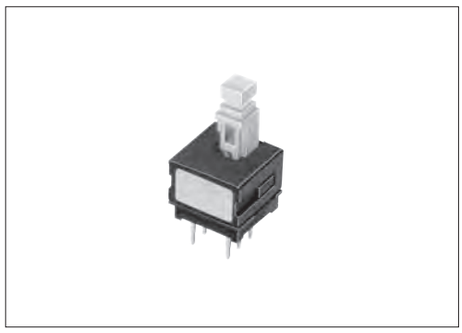

### Typical Specifications

| Items | | Specifications |
|---|---|---|
| Rating (max.)/(min.) (Resistive load) | | 0.1A 30V DC / 50μA 3V DC |
| Contact resistance (Initial/After operating life) | | 20mΩ max. / 40mΩ max. |
| Operating force | | Refer to the products line |
| Operating life | Without load | 10,000 cycles |
| | With load | 10,000 cycles (0.1A 30V DC) |

### Product Line

| Changeover timing | Travel (mm) | Total travel (mm) | Mounting method | Poles | knob style | Operating force | Operation | Terminal type | Minimum order unit (pcs.) Japan | Minimum order unit (pcs.) Export | Product No. | Drawing No. |
|---|---|---|---|---|---|---|---|---|---|---|---|---|
| Non shorting | 1.5 | 2.5 | PC board | 2 | Standard | $2^{+1}_{-0.7}$ N | Latching | Straight | 800 | 4,000 | **SPPH110800** | 1 |
| | | | | | | | Momentary | | | | **SPPH110300** | |
| | | | | | Short | | Latching | | | | **SPPH120400** | 2 |
| | | | | | | | Momentary | | | | **SPPH120100** | |
| | | | | | Standard | | Latching | Snap-in | | | **SPPH130400** | 1 |
| | | | | | | | Momentary | | | | **SPPH130100** | |
| | | | | | Short | | Latching | | | | **SPPH140300** | 2 |
| | | | | | | | Momentary | | | | **SPPH140100** | |
| | | | | | Standard | $3^{+1}_{-0.7}$ N | Latching | Straight | | | **SPPH110900** | 1 |
| | | | | | | | | Snap-in | | | **SPPH130500** | |
| | | | | | Short | | | | | | **SPPH140400** | 2 |

### Packing Specifications

Bulk

| Number of packages (pcs.) | | Export package measurements (mm) |
|---|---|---|
| 1 case / Japan | 1 case / export packing | |
| 800 | 4,000 | 400×270×290 |

Refer to P.130 for soldering conditions.

## Dimensions

Unit:mm

| No. | Style | PC board mounting hole dimensions (Viewed from the direction A) | |
|---|---|---|---|
| | | **Straight terminal** | **Snap-in terminal** |
| 1 | 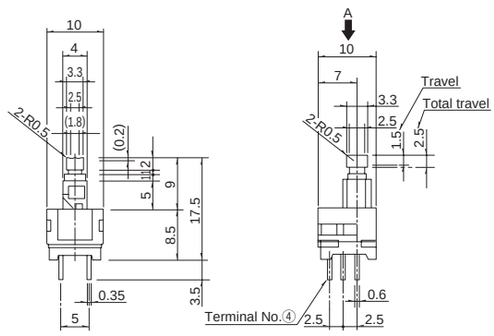 | 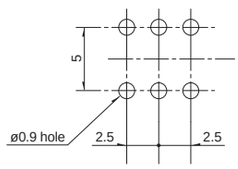 | 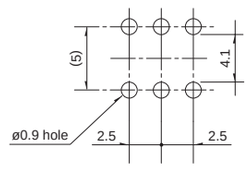<br>Thickness of PC board t=1.6mm |
| 2 | 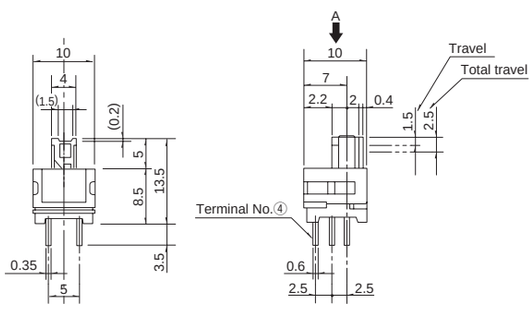 | 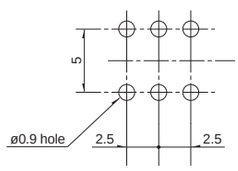 | 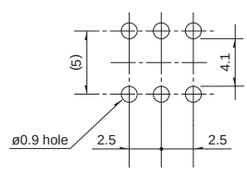<br>Thickness of PC board t=1.6mm |

## Circuit Diagram (Viewed from Direction A)

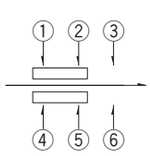


## Terminal Configuration

Unit:mm

| **Straight terminal** | **Snap-in terminal** |
|---|---|
| 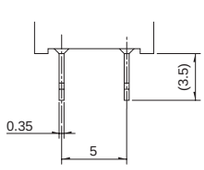 | 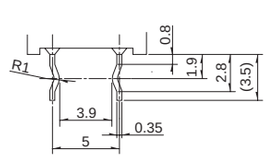 |

| Series | | | Vertical | | | |
|---|---|---|---|---|---|---|
| | | | **SPEH** | **SPEJ** | **SPPH4** | **SPPH1** |
| Photo | | |  |  |  |  |
| Dimensions (mm) | W | | 6 | 7 | 6.5 | 10 |
| | D | | 6 | 7 | 8.5 | 10 |
| | H | | 5 | 5.95 | 8.5 | |
| Travel (mm) | | | — | — | 2.2 | 1.5 |
| Total travel (mm) | | | 1.6 | 1.7 | 3 | 2.5 |
| Number of poles | | | 1 | 2 | | |
| Operating temperature range | | | −40℃ to +90℃ | −40℃ to +85℃ | −10℃ to +60℃ | |
| Automotive use | | | ● | ● | — | ● |
| Life cycle | | |  |  |  |  |
| Rating (max.) (Resistive load) | | | 50mA 16V DC | 0.2A 14V DC | 0.1A 30V DC | |
| Rating (min.) (Resistive load) | | | 10μA 1V DC | — | 50μA 3V DC | |
| Durability | Operating life without load | | 100,000cycles 400mΩ max. | 10,000cycles 150mΩ max. | 10,000cycles 100mΩ max. | 10,000cycles 40mΩ max. |
| | Operating life with load (at max. rated load) | | 100,000cycles 400mΩ max. | 10,000cycles 150mΩ max. | 10,000cycles 100mΩ max. | 10,000cycles 40mΩ max. |
| Electrical performance | Initial contact resistance | | 200mΩ max. | 150mΩ max. | 100mΩ max. | 20mΩ max. |
| | Insulation resistance | | 100MΩ min. 100V DC | 100MΩ min. 500V DC | | |
| | Voltage proof | | 250V AC for 1minute | 500V AC for 1minute | | |
| Mechanical performance | Terminal strength | | — | — | 5N for 1minute | |
| | Actuator strength | Operating direction | 50N | 49N | 30N | 50N |
| | | Pulling direction | — | — | 10N | — |
| Environmental performance | Cold | | -40℃ 1000h | -40℃ 500h | -20℃ 96h | |
| | Dry heat | | 90℃ 1000h | 85℃ 500h | 85℃ 96h | |
| | Damp heat | | 60℃, 90 to 95%RH 1000h | 60℃, 90 to 95%RH 500h | 40℃, 90 to 95%RH 96h | |
| Page | | | 119 | 120 | 121 | 122 |

Push Switches Soldering Conditions · · ·

## Example of Reflow Soldering Condition

1. Heating method: Double heating method with infrared heater.
2. Temperature measurement: Thermocouple $\phi$ 0.1 to 0.2 CA (K) or CC (T) at soldering portion (copper foil surface).
   A heat resisting tape should be used for fixed measurement.
3. Temperature profile

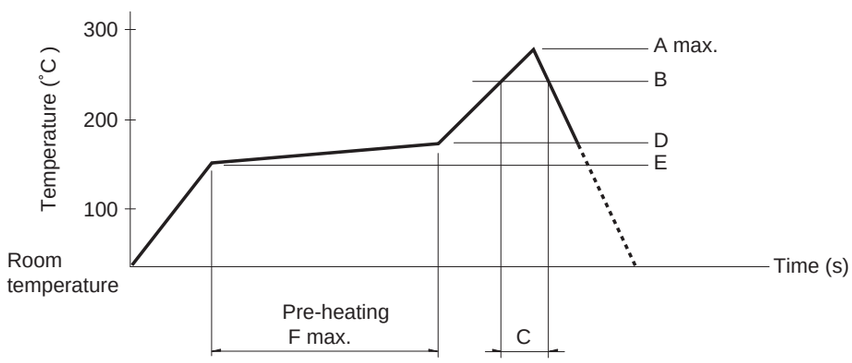


| Series (Reflow type) | A (℃) 3s max. | B (℃) | C (s) | D (℃) | E (℃) | F (s) |
|---|---|---|---|---|---|---|
| **SPEJ** | 260 | 230 | 40 | 180 | 150 | 120 |
| **SPEF** | | | | | | |
| **SPEH** | | | | | | |

Notes

1. The condition mentioned above is the temperature on the mounting surface of a PC board. There are cases where the PC board's temperature greatly differs from that of the switch, depending on the PC board's material, size, thickness, etc.
   The above-stated conditions shall also apply to switch surface temperatures.
2. Soldering conditions differ depending on reflow soldering machines. Prior verification of soldering condition is highly recommended.

## Reference for Hand Soldering

| Series | Soldering temperature | Soldering time |
|---|---|---|
| **SPPJ3, SPPJ2, SPUN, SPUJ, SPPH4, SPPH1** | 350±10℃ | 3+1/0s |
| **SPED2, SPED4** | 350±10℃ | 3±0.5s |
| **SPEJ** | 350±10℃ | 4s max. |
| **SPEF** | 350±5℃ | 3s max. |
| **SPEH** | 350℃ max. | 3s max. |

## Reference for Dip Soldering

(For PC board terminal types)

| Series | Items | | Dip soldering | |
|---|---|---|---|---|
| | Preheating temperature | Preheating time | Soldering temperature | Duration of immersion |
| **SPPJ3** | 100℃ max. | 60s max. | 260±5℃ | 5±1s |
| **SPUN** | 100℃ max. | 60s max. | 260±5℃ | 10±1s |
| **SPUJ, SPPH4** | — | | 260±5℃ | 5±1s |
| **SPPJ2, SPPH1, SPED2, SPED4, SPEF** | — | | 260±5℃ | 10±1s |