SPPJ3 2.5mm-travel Compact-sized Horizontal Type

Lever height 4.7mm, small sized horizontal type

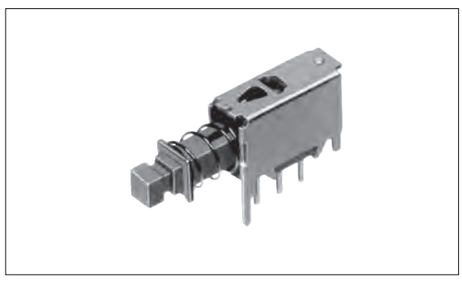

Typical Specifications

Items		Specifications
Rating (max.)/(min.) (Resistive load)		0.2A 30V DC / 50μA 3V DC
Contact resistance (Initial/After operating life)		20mΩ max. / 40mΩ max.
Operating force	1-pole	2.3±1N
	2-pole	3.3±1N
Operating life	Without load	10,000 cycles
	With load	10,000 cycles (0.2A 30V DC)

Product Line

Changeover timing	Travel (mm)	Total travel (mm)	Mounting method	Poles	Operation	Terminal type	Minimum order unit (pcs.) Japan	Minimum order unit (pcs.) Export	Product No.	Drawing No.
Non shorting	2.5	3.5	PC board	1	Latching	For PC board	900	4,500	**SPPJ310500**	1
					Momentary				**SPPJ311500**	
				2	Latching				**SPPJ320600**	2
					Momentary				**SPPJ322300**	

Packing Specifications

Bulk

Number of packages (pcs.)		Export package measurements (mm)
1 case / Japan	1 case / export packing	
900	4,500	400×270×290

Dimensions

Unit:mm

No.	Style	PC board mounting hole dimensions (Viewed from the direction A)
1	**1-pole, 2-position** 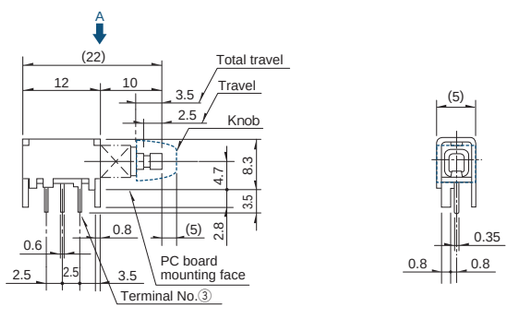	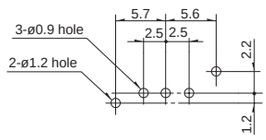

Refer to P.130 for soldering conditions.

SPPJ3 2.5mm-travel Compact-sized Horizontal Type

Dimensions

Unit:mm

No.	Style	PC board mounting hole dimensions (Viewed from the direction A)
2	**2-pole, 2-position** 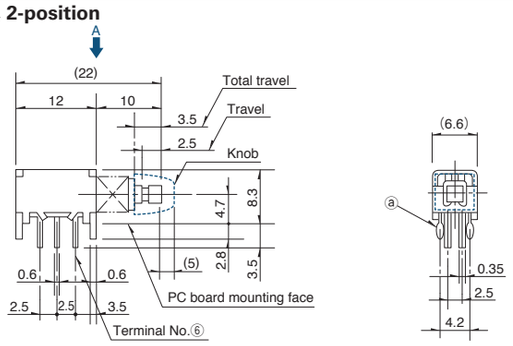	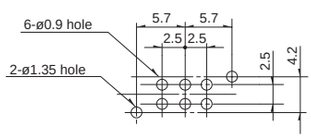

Actuator Configuration at Front Edge

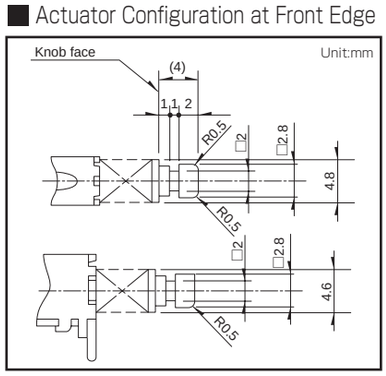

Detail of ⓐ

Unit:mm

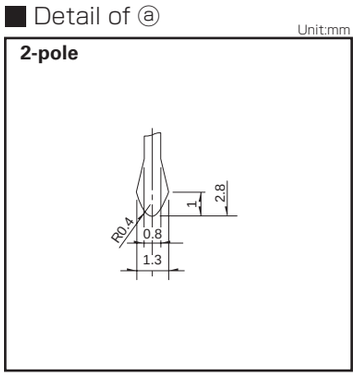

Terminal Configuration

Unit:mm

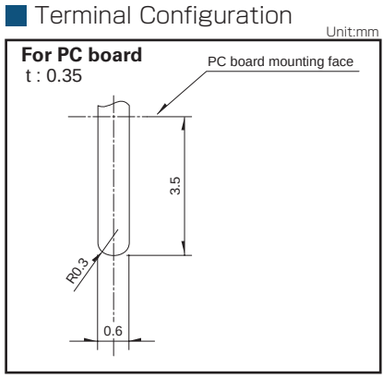

Circuit Diagram (Viewed from Direction A)

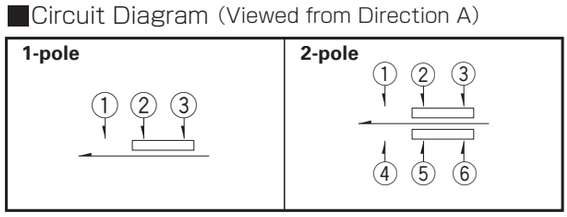

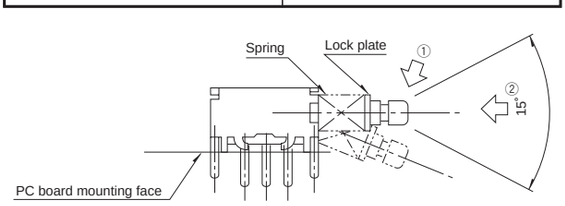

Note

The SPPJ3 series should be operated in arrow 2 direction as shown in the following figure and applied within an angle of 15° based from the center. If excessive force is applied to the lever from arrow ① direction, it may fall down as illustrated and cause malfunctions.

Knob Lineup

Unit:mm

Knob outline drawing	Model
Color:Black 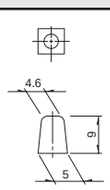	**UJ206022**

Notes

We recommend the use of adhesive to secure the knob when mounting onto switches.

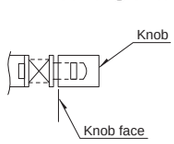

ALPS ALPINE

Push Switches

List of Varieties

Series			Horizontal				
			SPPJ3	**SPPJ2**	**SPUJ**	**SPUN**	**SPUN** medium current
Photo							
Dimensions (mm)	W		5 or 6.6	7.2	7.5	10	
	D		12		15.2 22.7	24 36	
	H		8.3	9.6	8.8	13	
Travel (mm)			2.5		2	2.5	
Total travel (mm)			3.5		3	3.5	
Number of poles			1 2	2	2 4		
Operating temperature range			−40℃ to +85℃	−10℃ to +60℃			
Automotive use			●	●	—	—	—
Life cycle			★3	★3	★3	★3	★3
Rating (max.) (Resistive load)			0.2A 30V DC		0.1A 30V DC		1A 25V DC
Rating (min.) (Resistive load)			50μA 3V DC				—
Durability	Operating life without load		10,000 cycles 40mΩ max.			30,000 cycles 40mΩ max.	10,000 cycles 40mΩ max.
	Operating life with load (at max. rated load)		10,000 cycles 40mΩ max.				5,000 cycles 40mΩ max.
Electrical performance	Initial contact resistance		20mΩ max.				
	Insulation resistance		100MΩ min. 500V DC				
	Voltage proof		500V AC for 1minute				
Mechanical performance	Terminal strength		5N for 1minute				
	Actuator strength	Operating direction	50N	30N	50N		
		Pulling direction	—	—	50N		
Environmental performance	Cold		−40℃ 96h	−20℃ 96h			
	Dry heat		85℃ 96h				
	Damp heat		40℃, 90 to 95%RH 96h				
Page			111	113	115	117	

Push Switches Soldering Conditions · · ·

Example of Reflow Soldering Condition

1. Heating method: Double heating method with infrared heater.
2. Temperature measurement: Thermocouple ϕ 0.1 to 0.2 CA (K) or CC (T) at soldering portion (copper foil surface).
   A heat resisting tape should be used for fixed measurement.
3. Temperature profile

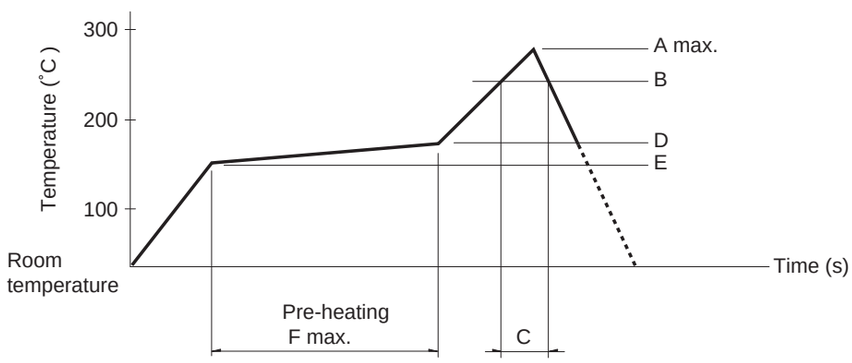

Series (Reflow type)	A (℃) 3s max.	B (℃)	C (s)	D (℃)	E (℃)	F (s)
SPEJ	260	230	40	180	150	120
SPEF						
SPEH						

Notes

1. The condition mentioned above is the temperature on the mounting surface of a PC board. There are cases where the PC board's temperature greatly differs from that of the switch, depending on the PC board's material, size, thickness, etc.
   The above-stated conditions shall also apply to switch surface temperatures.
2. Soldering conditions differ depending on reflow soldering machines. Prior verification of soldering condition is highly recommended.

Reference for Hand Soldering

Series	Soldering temperature	Soldering time
SPPJ3, SPPJ2, SPUN, SPUJ, SPPH4, SPPH1	350±10℃	3+1/0s
SPED2, SPED4	350±10℃	3±0.5s
SPEJ	350±10℃	4s max.
SPEF	350±5℃	3s max.
SPEH	350℃ max.	3s max.

Reference for Dip Soldering

(For PC board terminal types)

Series	Items		Dip soldering	
	Preheating temperature	Preheating time	Soldering temperature	Duration of immersion
SPPJ3	100℃ max.	60s max.	260±5℃	5±1s
SPUN	100℃ max.	60s max.	260±5℃	10±1s
SPUJ, SPPH4	—		260±5℃	5±1s
SPPJ2, SPPH1, SPED2, SPED4, SPEF	—		260±5℃	10±1s