TK 1309 – Polystyrene and Polycarbonate – 130x94mm (5.12x3.70in.)

Standard Features

- **Protection Level:** IP66 (NEMA 4X)
- **Technical:** Smooth or Knockout Sidewalls
  Gray or Tinted Transparent Cover ①
  Multiple Enclosure Mounting Options
- **Enclosure Material:** Polystyrene or Polycarbonate
- **Gasket Material:** Polyurethane
- **Color:** Light Gray
- **Temperature Range:** Polystyrene
  -40°C to 70°C (-40°F to 158°F)
  Polycarbonate
  -35°C to 120°C (-31°F to 248°F)
- **Accessories:** See section below

Upon Request



Smooth Sidewalls

Ordering Information	Height mm (in)	Polystyrene Cat. No.	Type	Cover Color	Std. Pk.	Polycarbonate Cat. No.	Type	Cover Color	Std. Pk.
Enclosure - low cover	57 mm (2.24 in)	110-409	PS 1309-6-o	gray	3	120-409	PC 1309-6-o	gray	3
Enclosure - high cover	81 mm (3.19 in)	110-909	PS 1309-8-o	gray	3	120-909	PC 1309-8-o	gray	3
Enclosure - low cover	57 mm (2.24 in)	111-009	PS 1309-6-to	trans.	3	130-009	PC 1309-6-to	trans.	3
Enclosure - high cover	81 mm (3.19 in)	111-509	PS 1309-8-to	trans.	3	130-509	PC 1309-8-to	trans.	3

Sidewalls with PG Knockouts (metric available)

Ordering Information	Height mm (in)	Polystyrene Cat. No.	Type	Cover Color	Std. Pk.	Polycarbonate Cat. No.	Type	Cover Color	Std. Pk.
Enclosure - low cover	57 mm (2.24 in)	115-409	PS 1309-6	gray	3	125-409	PC 1309-6	gray	3
Enclosure - high cover	81 mm (3.19 in)	115-909	PS 1309-8	gray	3	125-909	PC 1309-8	gray	3
Enclosure - low cover	57 mm (2.24 in)	116-009	PS 1309-6-t	trans.	3	135-009	PC 1309-6-t	trans.	3
Enclosure - high cover	81 mm (3.19 in)	116-509	PS 1309-8-t	trans.	3	135-509	PC 1309-8-t	trans.	3

RK Enclosures with Terminal Blocks

Ordering Information	Height	Cat. No.	Type	Cover Color	Std. Pk.
Enclosure - 15 pole/12 AWG Terminal	57 mm (2.24 in)	612-404	RK1309	gray	3
Enclosure - DIN Rail only (TS15)	57 mm (2.24 in)	612-904	RK1309	gray	3

Accessories

Ordering Information	Cat. No.	Type	Std. Pk.
Mounting Plate	195-009	MP1309	1
DIN Rail TS35-106mm	Z-658	TS 35/106	1
DIN Rail TS15-111mm	Z-632	TS 15/111	1
Hinge Kit Set	190-002	HK1	1
Mounting Tab Kit	194-001	MT1	1

Please refer to pages 106-113 for additional accessories and detailed information.

① Clear transparent lids available upon request

Dimensions

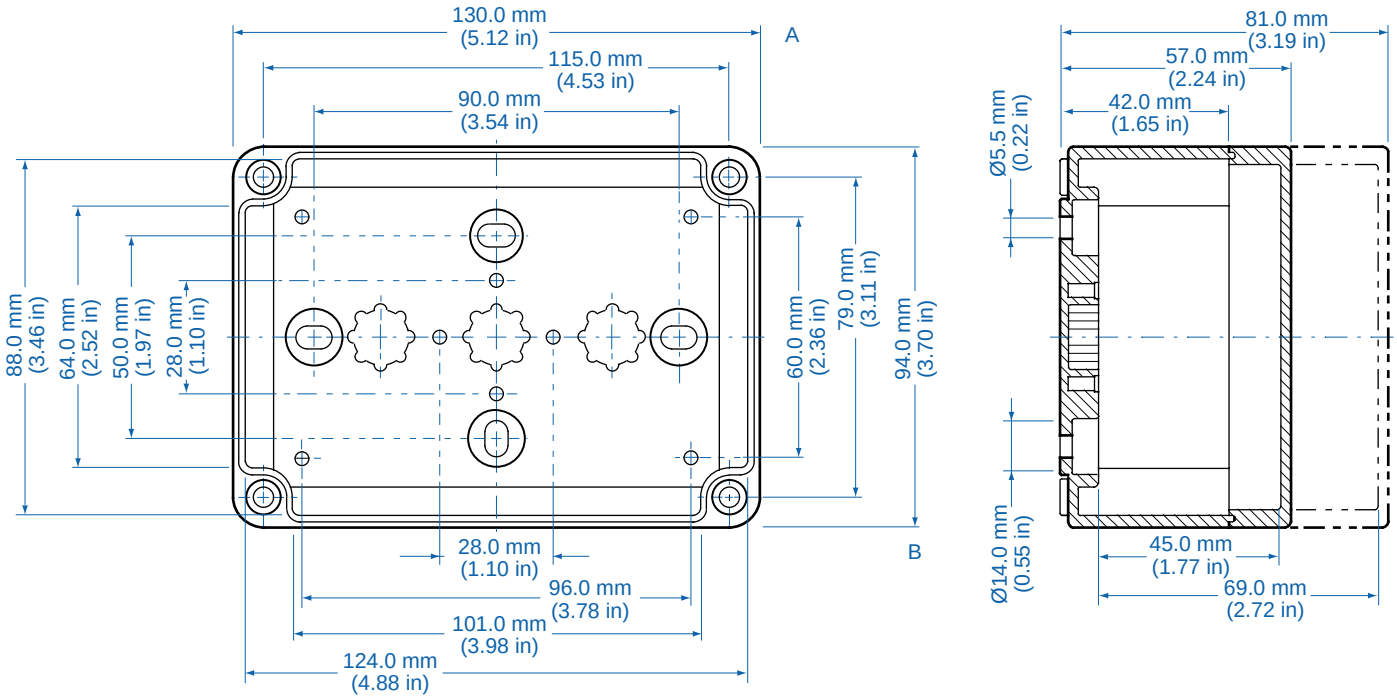

Knockout Positions ②

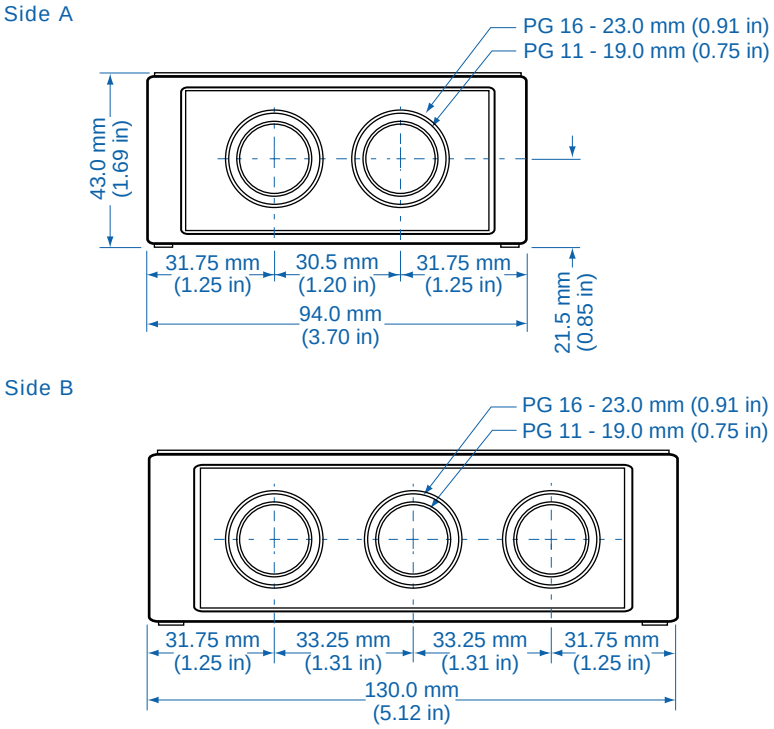

② Metric knockouts available upon request