Altech Corp.®

Serving the Automation & Control Industry since 1984

Quality System

Quality Endorsed Company



22 & 30mm Push Buttons & Control Stations



Altech Corporation

Since 1984, Altech Corporation has grown to become a leading supplier of automation and industrial control components. Headquartered in Flemington, NJ, Altech has an experienced staff of engineering, manufacturing and sales personnel to provide the highest quality products with superior service. This is the Altech Commitment!

Altech 22 and 30mm Push Buttons offer ideal cost-effective solutions for control circuits utilizing both direct and remote management applications. Ease of assembly has been engineered into the design; the only tool necessary for installation is a screwdriver.

- LED Indicating Devices
- Pilot Lights
- Push Button Stations
- Push Button Enclosures
- UL Recognized
- Custom Push Button Assemblies
- All Very Competitively Priced

Our well trained technical experts welcome the opportunity to answer your technical questions and provide solutions to your automation and control needs. Give us a call or visit www.altechcorp.com.





Quality Commitment

Altech's control components meet diverse national and international standards such as UL, NEC, CSA, IEC, VDE and more. Altech provides superior customer service and delivery through Total Quality Management and Continuous Process Improvement. Altech is ISO 9001 approved. We perform these services with honesty and integrity and are committed to achieve these goals.

Table of Contents

22mm Push Buttons

Introduction - 4-5


22mm Non-Illuminated Metal Operators
6-7


22mm Non-Illuminated Mushroom Metal Operators
8-11


22mm LED Illuminated Mushroom Metal Operators
12-13


22mm Twin Touch Non-Illuminated and LED Illuminated Metal Operators
14-15

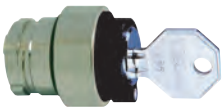
22mm Non-Illuminated Metal Selector Switch Operators
16-17


22mm LED Illuminated Metal Selector Switches
18-19


22mm LED Illuminated Projecting Metal Operator
20-21


22mm LED Illuminated Flush Metal Operators
22-23


22mm LED Metal Pilot Lights
24

22mm Specifications - 25


Economy Non-Illuminated Plastic Push Buttons
26-27


Unibody LED Illuminated Plastic Pilot Lights
28-29


22mm Plastic Enclosures, Control Boxes & Installation Instructions
30-35


22mm Aluminum Enclosures
36-37


22mm Push Button Accessories & Switch Contacts
38-41


Pre-assembled or Ready to Assemble Control Stations
42-43

30mm Metal Push Buttons

Introduction - 44


30mm Non-Illuminated Metal Operators
44-45

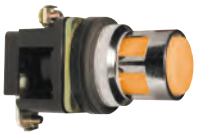
30mm LED Illuminated Metal Operators
46-47


30mm Non-Illuminated Metal Selector Switches
48-49

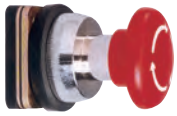
30mm Non-Illuminated MushroomMetal Operators
50-51


30mm Metal Pilot Lights
52


30mm Aluminum Enclosures
53



30mm Push Button Accessories, Contact Blocks & Technical Notes
54-56

Index - 57-60

Terms and Conditions - 62

22 and 30 mm Altech Metal Push Buttons



Part No. PBD

Quality at a Competitive Price!

Altech Corp.® • 35 Royal Road • Flemington, NJ 08822-6000 • Phone (908)806-9400 • FAX (908)806-9490 • www.altechcorp.com

22mm Metal Push Buttons

Control and Signalling devices Ø 22.5mm

This range of Ø 22.5mm push buttons, selector switches, illuminated switches, illuminated selector switches and pilot lights have been designed to provide the following features:

- Economy of space
- Self-wiping contacts
- Safe operation
- Simple to mount (screw driver is all that is required)
- Fixing method unaffected by excessive vibration-unit does not loosen
- Protection against electric shock (unit grounded)
- Aesthetically pleasing
- Heavy-duty construction
- Shrouded terminals
- Flame resistant materials
- Use of LEDs for long life and minimum maintenance

Actuators

The circular actuators have chrome plated metal bezels, and are interchangeable with different contact elements. Custom colors and finishes (black, silver satin, etc.) are available.

Contact Elements

The contact elements are double break and have self-wiping contacts. The elements are interchangeable and can be stacked without additional hardware. 1 to 6 elements (NO or NC) can be used with non-Illuminated actuators, whereas, 1 to 4 elements (NO or NC) can be used for illuminated actuators. Gold plated NO and NC contact elements for low voltage, low current switching circuits < 25 mA, are available.

Multiple Switch Contact Assembly

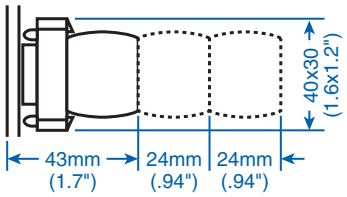

LED Illuminated Actuators and Pilot Lights

LED illuminated actuators & pilot lights are supplied with LED in bayonet cap suitable for operating at various voltages. LED bulbs with bayonet cap are constructed in the standard BA9S design.

Terminals

Contact elements and pilot lights are designed to have shrouded terminals with combination flat/phillips screws.

Mounting

These Ø 22.5 control devices can be mounted in any position in panels of 1 to 6 mm (.039 - .236 in.) thickness. We recommend minimum fixing centers of 30 x 40mm (1.2 x 1.57 inches). However, the dimensions and configuration should be decided on the basis of the application. The actuators and the lens assemblies lock on to the holding bracket using a bayonet type of fixing which enables a simple and fast assembly. The complete assembly is locked into position on the panel by two M4 pointed screws on the bracket, tightened equally from the rear. The screws should be tightened to such an extent as to pierce through the paint on the panel from inside. These screws also ensure the grounding of the unit.

Panel Cutout with
minimum space requirements

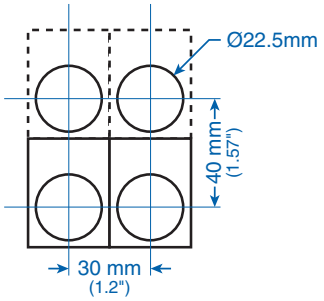

Sample
Push Button Assembly

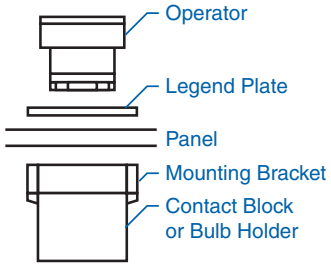

22mm Non-Illuminated Metal Operators

E225660

Certified for **NEMA Type 4X** 12 environment.

Flush
Momentary
with mounting bracket

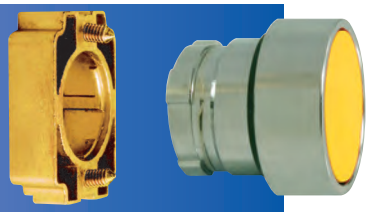

	Color	Cat No.
☐	White	2AF1
■	Black	2AF2
■	Green	2AF3
■	Red	2AF4
■	Blue	2AF6
■	Yellow	2AF8

Booted
Momentary
with mounting bracket

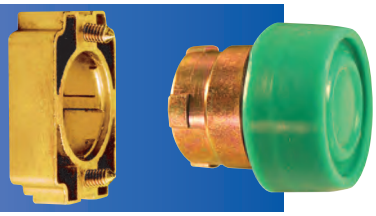

	Color	Cat No.
☐	White	2AB1
■	Black	2AB2
■	Green	2AB3
■	Red	2AB4
■	Blue	2AB6
■	Yellow	2AB8

Projecting
Momentary
with mounting bracket

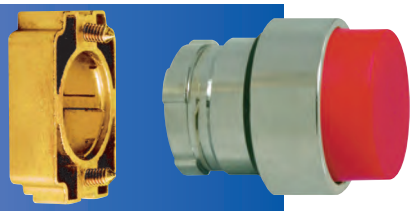

	Color	Cat No.
☐	White	2AP1
■	Black	2AP2
■	Green	2AP3
■	Red	2AP4
■	Blue	2AP6
■	Yellow	2AP8

Recessed
Momentary
with mounting bracket

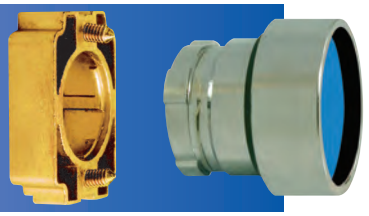

	Color	Cat No.
☐	White	2AF1RH
■	Black	2AF2RH
■	Green	2AF3RH
■	Red	2AF4RH
■	Blue	2AF6RH
■	Yellow	2AF8RH



All above operators available with remote attachment. Standard length is 50mm (2 in.), other lengths available upon request. Contact Altech for Part Number.

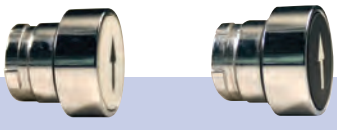

Markings on Request

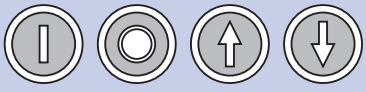

Altech Push Buttons are available in a variety of markings, including molded arrows. Please contact Altech for further information and part numbers.

Switch Contacts
(sold separately)

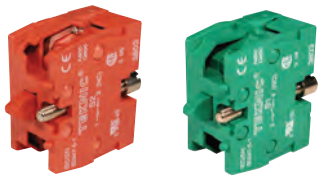

- Heavy-duty contact blocks with mounting screws. Blocks can be stacked 2 blocks across by 3 blocks deep for a total of 6 circuits.
- Contact blocks are available with silver contacts or gold plated contacts
- Self-wiping contacts

Panel Mount

Normally Open Silver	**S1**
Normally Closed Silver	**S2**
Normally Open Gold Plated	**S3**
Normally Closed Gold Plated	**S4**

Base Mount*

Normally Open Silver	**S5**
Normally Closed Silver	**S6**
Normally Open Gold Plated	**S7**
Normally Closed Gold Plated	**S8**

** For use with non-illuminated operators in thermoplastic or aluminum enclosures listed on pages 30 and 36-37.*

Altech Corp.® • 35 Royal Road • Flemington, NJ 08822-6000 • Phone (908)806-9400 • FAX (908)806-9490 • www.altechcorp.com

Dimensional Drawings

All dimensions shown in millimeters.
To convert to inches multiply by 0.03937

Non-Illuminated Flush

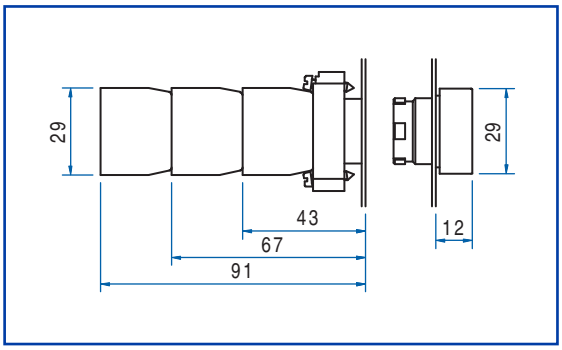

Non-Illuminated Booted

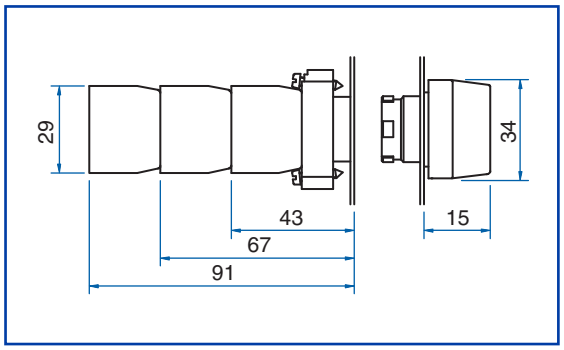

Non-Illuminated Projecting

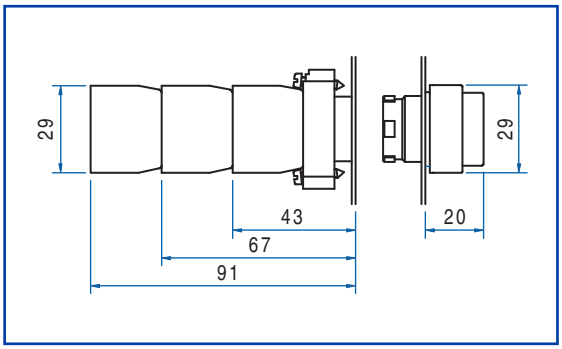

Non-Illuminated Recessed

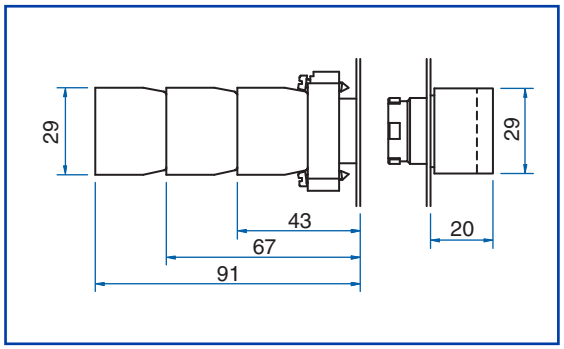

Exploded Assembly View

- *Up to six switch contacts can be installed on any non-Illuminated operator.*
- *Up to four switch contacts can be installed if maintained action attachment (2PPM) is used.*
- *Switch contacts and operators are sold separately. Preassembled push buttons are available on request.*

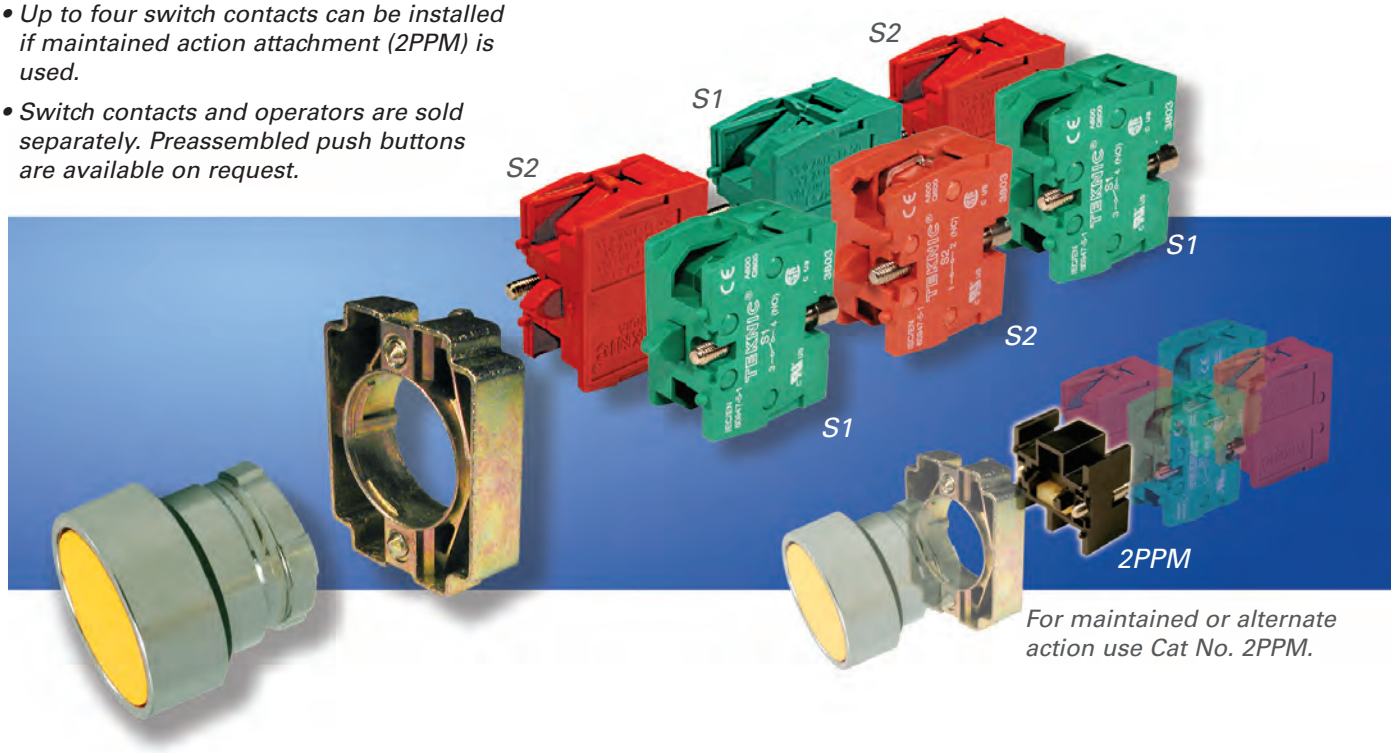

For maintained or alternate action use Cat No. 2PPM.

22mm Non-Illuminated Mushroom Metal Operators

E225660

Certified for **NEMA Type 4X** 12 environment.

Mushroom
Momentary
with mounting bracket

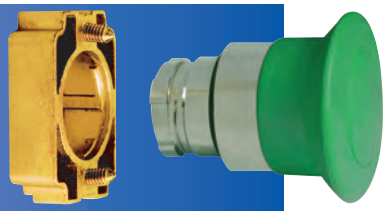

	Color	Description	Cat No.
☐	White	40mm, Head	2AM1
■	Black	40mm, Head	2AM2
■	Green	40mm, Head	2AM3
■	Red	40mm, Head	2AM4
■	Blue	40mm, Head	2AM6
■	Yellow	40mm, Head	2AM8

Mushroom
Momentary Large
with mounting bracket

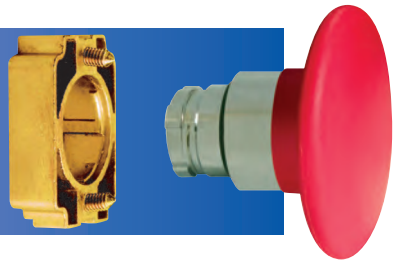

	Color	Description	Cat No.
☐	White	60mm, Head	2AMJ1
■	Black	60mm, Head	2AMJ2
■	Green	60mm, Head	2AMJ3
■	Red	60mm, Head	2AMJ4
■	Blue	60mm, Head	2AMJ6
■	Yellow	60mm, Head	2AMJ8

Mushroom
Push-Pull
with mounting bracket

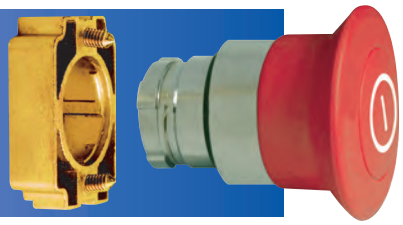

	Color	Description	Cat No.
☐	White	40mm, Head	2AMPP1
■	Black	40mm, Head	2AMPP2
■	Green	40mm, Head	2AMPP3
■	Red	40mm, Head	2AMPP4
■	Blue	40mm, Head	2AMPP6
■	Yellow	40mm, Head	2AMPP8

Mushroom
Push-Pull Large
with mounting bracket

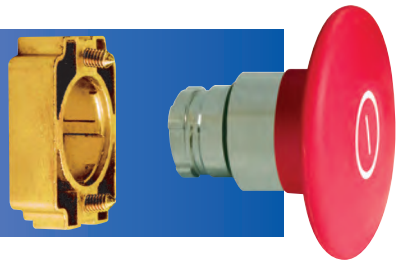

	Color	Description	Cat No.
☐	White	60mm, Head	2AMPPJ1
■	Black	60mm, Head	2AMPPJ2
■	Green	60mm, Head	2AMPPJ3
■	Red	60mm, Head	2AMPPJ4
■	Blue	60mm, Head	2AMPPJ6
■	Yellow	60mm, Head	2AMPPJ8

Markings on Request



Altech Push Buttons are available in a variety of custom markings.

Switch Contacts
(sold separately)

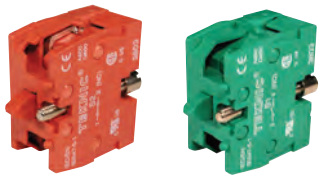

- Heavy-duty contact blocks with mounting screws. Blocks can be stacked 2 blocks across by 3 blocks deep for a total of 6 circuits.
- Contact blocks are available with silver contacts or gold plated contacts
- Self-wiping contacts

Panel Mount

Normally Open Silver	**S1**
Normally Closed Silver	**S2**
Normally Open Gold Plated	**S3**
Normally Closed Gold Plated	**S4**

Base Mount*

Normally Open Silver	**S5**
Normally Closed Silver	**S6**
Normally Open Gold Plated	**S7**
Normally Closed Gold Plated	**S8**

** For use with non-illuminated operators in thermoplastic or aluminum enclosures listed on pages 30 and 36-37.*

Altech Corp.® • 35 Royal Road • Flemington, NJ 08822-6000 • Phone (908)806-9400 • FAX (908)806-9490 • www.altechcorp.com

Dimensional Drawings

All dimensions shown in millimeters.
To convert to inches multiply by 0.03937

Mushroom Momentary

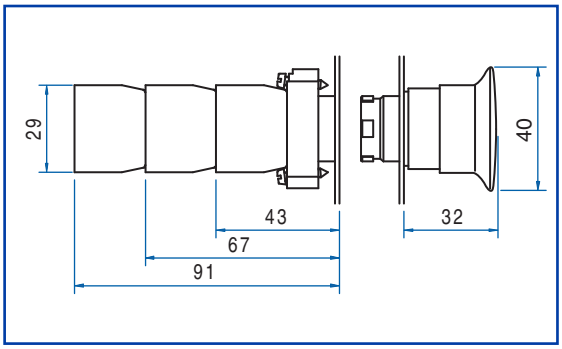

Mushroom Momentary Large

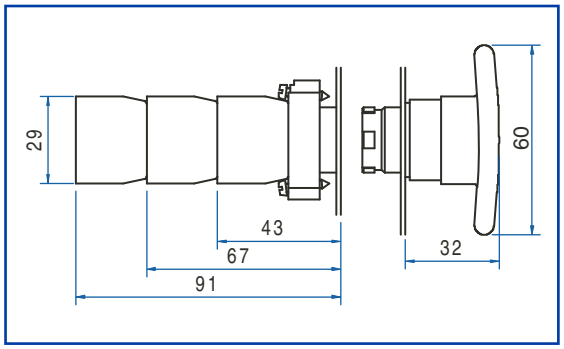

Mushroom Push-Pull

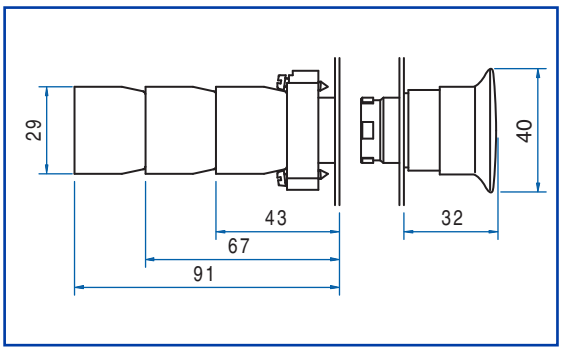

Mushroom Push-Pull Large

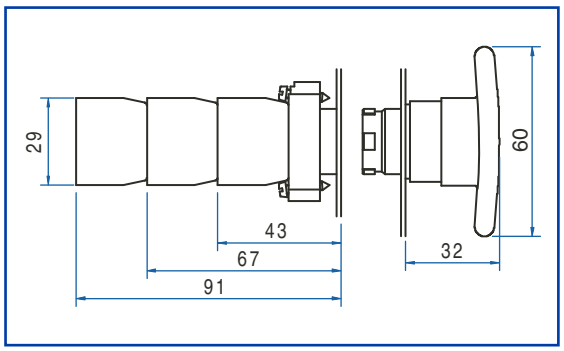

Exploded Assembly View

- *Up to six switch contacts can be installed on any non-Illuminated operator.*
- *Switch contacts and operators are sold separately. Preassembled push buttons are available on request.*

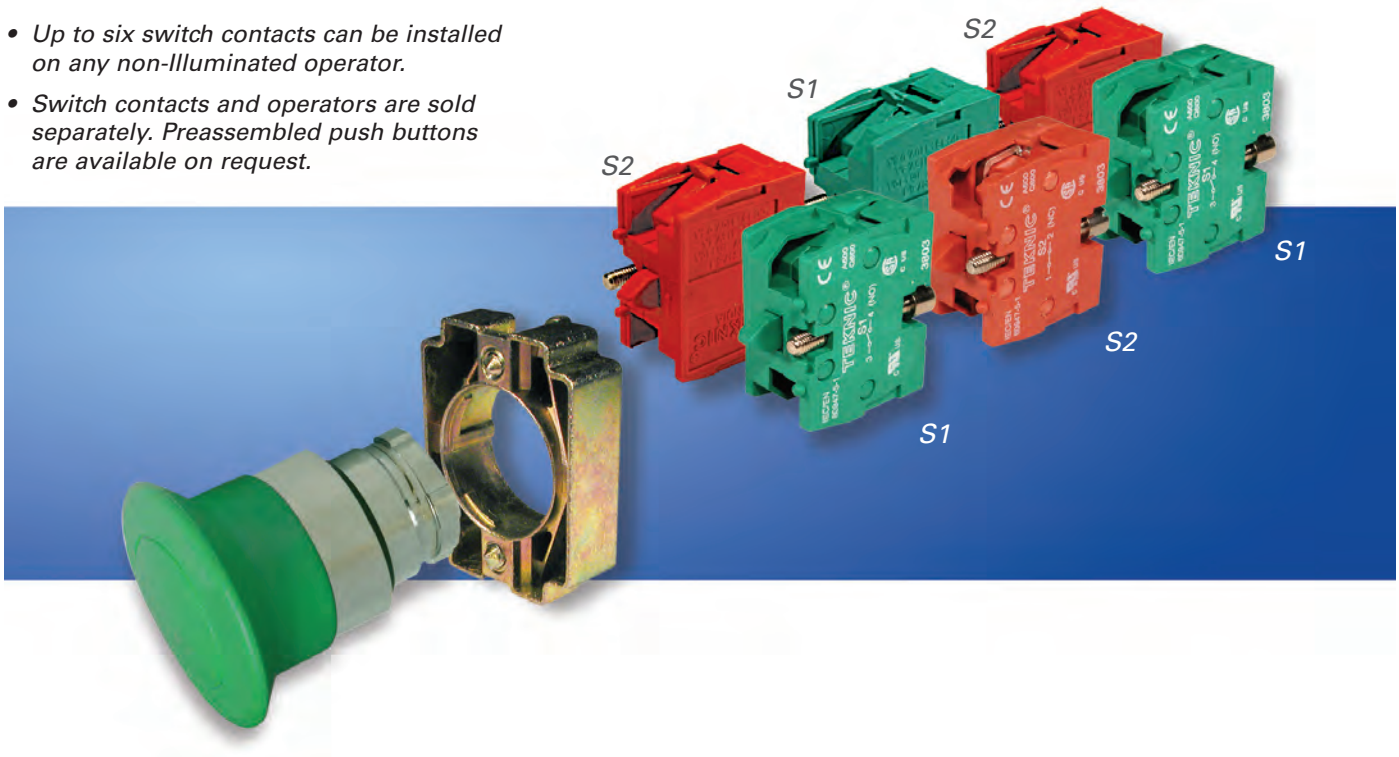

22mm Non-Illuminated Mushroom Metal Operators

Certified for **NEMA Type 4X** 12 environment.

E225660

Mushroom
Push-Turn Small
with mounting bracket

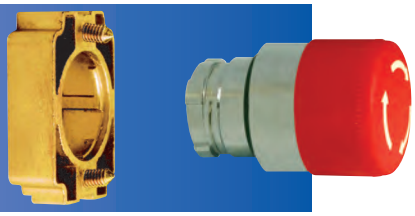

	Color	Description	Cat No.
☐	White	30 mm, Head	2AMLS1
■	Black	30 mm, Head	2AMLS2
■	Green	30 mm, Head	2AMLS3
■	Red	30 mm, Head	2AMLS4
■	Blue	30 mm, Head	2AMLS6
■	Yellow	30 mm, Head	2AMLS8

Mushroom
Push-Turn
with mounting bracket

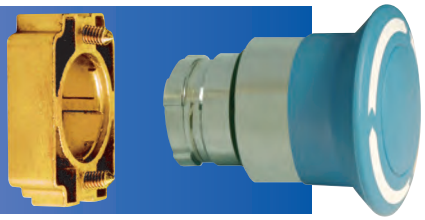

	Color	Description	Cat No.
☐	White	40mm, Head	2AML1
■	Black	40mm, Head	2AML2
■	Green	40mm, Head	2AML3
■	Red	40mm, Head	2AML4
■	Blue	40mm, Head	2AML6
■	Yellow	40mm, Head	2AML8

Mushroom
Push-Turn Large
with mounting bracket

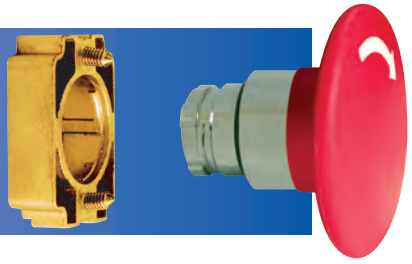

	Color	Description	Cat No.
☐	White	60mm, Head	2AMLJ1
■	Black	60mm, Head	2AMLJ2
■	Green	60mm, Head	2AMLJ3
■	Red	60mm, Head	2AMLJ4
■	Blue	60mm, Head	2AMLJ6
■	Yellow	60mm, Head	2AMLJ8

Mushroom
with Key Release
with mounting bracket



	Color	Description	Cat No.
☐	White	40mm, Head	2AMLKB1
■	Black	40mm, Head	2AMLKB2
■	Green	40mm, Head	2AMLKB3
■	Red	40mm, Head	2AMLKB4
■	Blue	40mm, Head	2AMLKB6
■	Yellow	40mm, Head	2AMLKB8
	**Replacement Key**		**2KY455**

All keys are “keyed alike”. Different keys are available on request.

Markings on Request



Altech Push Buttons are available in a variety of custom markings.

Switch Contacts
(sold separately)

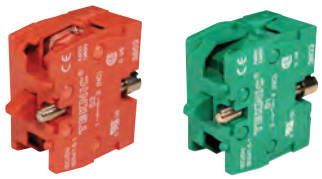

- Heavy-duty contact blocks with mounting screws. Blocks can be stacked 2 blocks across by 3 blocks deep for a total of 6 circuits.
- Contact blocks are available with silver contacts or gold plated contacts
- Self-wiping contacts

Panel Mount

Normally Open Silver	**S1**
Normally Closed Silver	**S2**
Normally Open Gold Plated	**S3**
Normally Closed Gold Plated	**S4**

Base Mount*

Normally Open Silver	**S5**
Normally Closed Silver	**S6**
Normally Open Gold Plated	**S7**
Normally Closed Gold Plated	**S8**

** For use with non-illuminated operators in thermoplastic or aluminum enclosures listed on pages 30 and 36-37.*

Altech Corp.® • 35 Royal Road • Flemington, NJ 08822-6000 • Phone (908)806-9400 • FAX (908)806-9490 • www.altechcorp.com

Dimensional Drawings

All dimensions shown in millimeters.
To convert to inches multiply by 0.03937

Mushroom Push-Turn Small

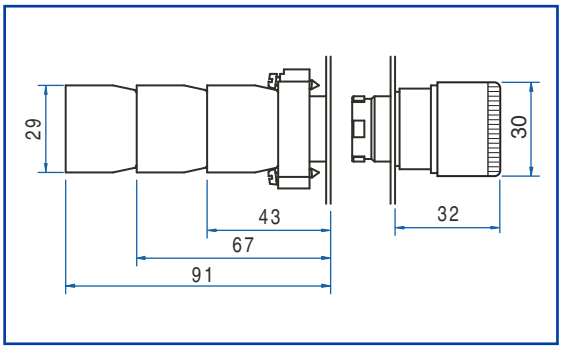

Mushroom Push-Turn

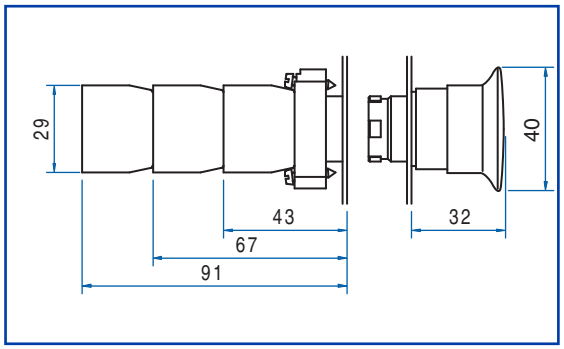

Mushroom Push-Turn Large

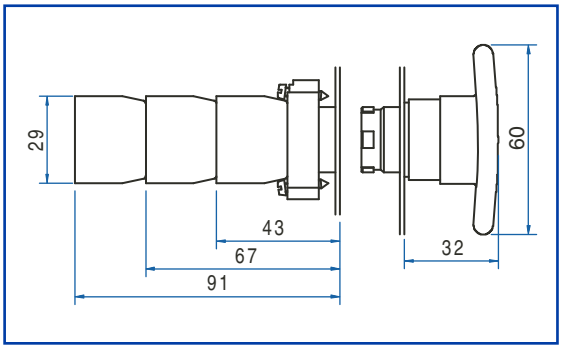

Mushroom with Key Release

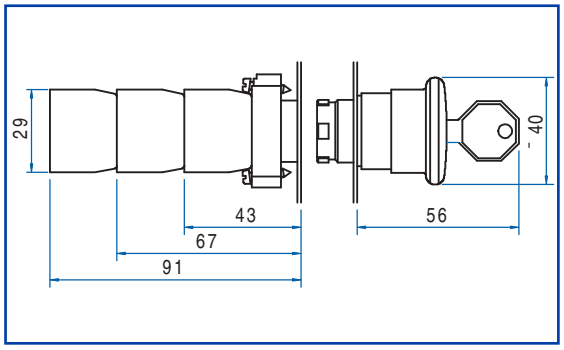

Exploded Assembly View

- *Up to six switch contacts can be installed on any non-Illuminated operator.*
- *Switch contacts and operators are sold separately. Preassembled push buttons are available on request.*

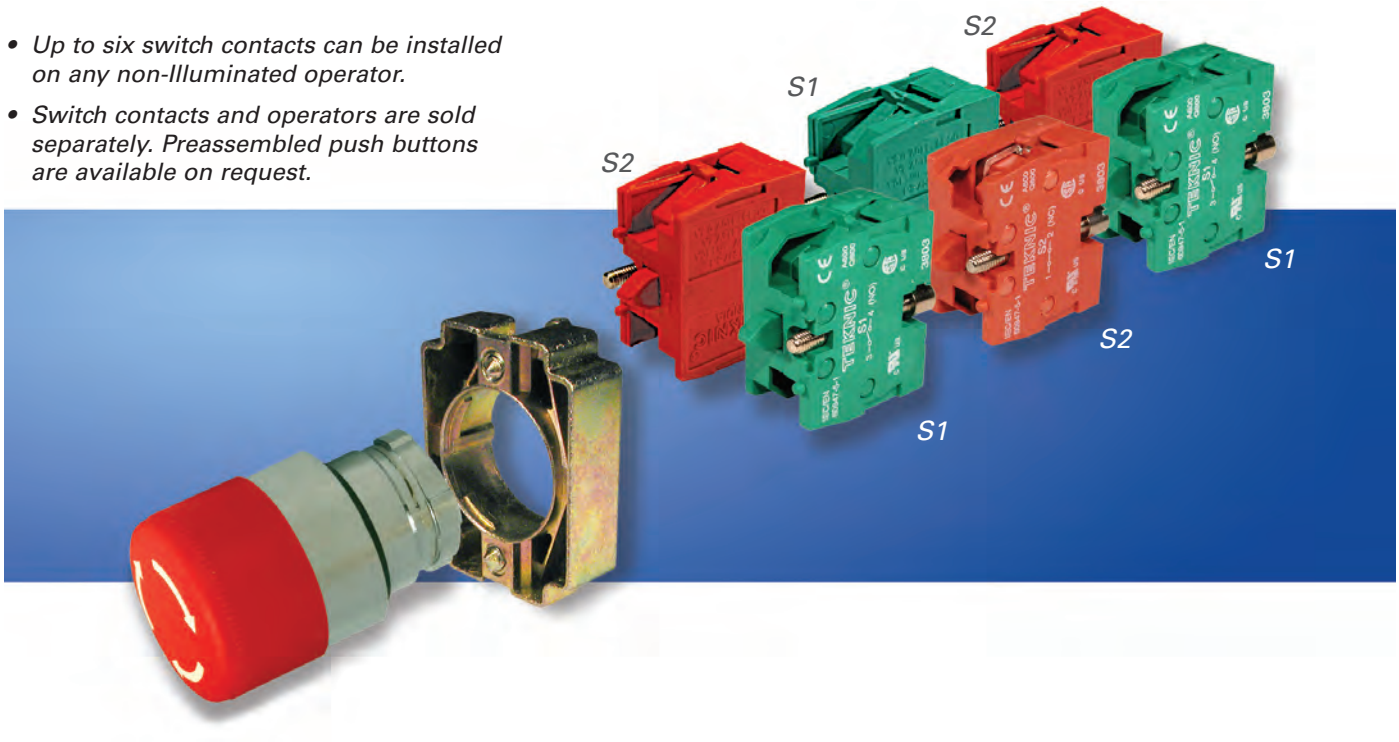

22mm LED Illuminated Mushroom Metal Operators

E225660

Certified for **NEMA Type 4X** 12 environment.

Mushroom Illuminated Momentary

with LED bulb, bulb holder and mounting bracket

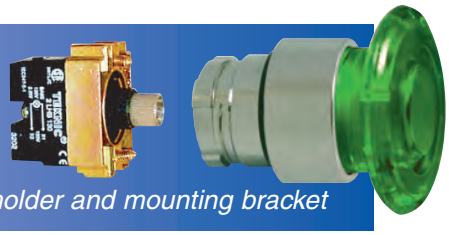

Dimensional Drawings

All dimensions shown in millimeters.
To convert to inches multiply by 0.03937

Illuminated Mushroom Momentary

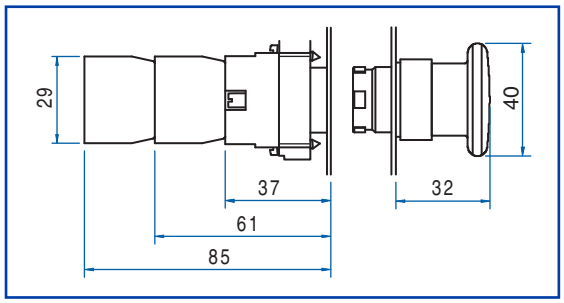

Switch Contacts

(sold separately)

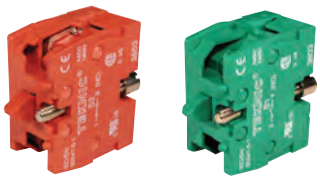

- Heavy-duty contact blocks with mounting screws. Blocks can be stacked 2 blocks across by 3 blocks deep for a total of 6 circuits.
- Contact blocks are available with silver contacts or gold plated contacts
- Self-wiping contacts

Panel Mount

Normally Open Silver	**S1**
Normally Closed Silver	**S2**
Normally Open Gold Plated	**S3**
Normally Closed Gold Plated	**S4**

Base Mount*

Normally Open Silver	**S5**
Normally Closed Silver	**S6**
Normally Open Gold Plated	**S7**
Normally Closed Gold Plated	**S8**

** For use with non-illuminated operators in thermoplastic or aluminum enclosures listed on pages 30 and 36-37.*

	Color	Description	Cat No.
	12V AC/DC		
☐	White	40mm Head, 12VAC/DC	2ALM1LB-012
■	Green	40mm Head, 12VAC/DC	2ALM3LB-012
■	Red	40mm Head, 12VAC/DC	2ALM4LB-012
■	Amber	40mm Head, 12VAC/DC	2ALM5LB-012
■	Blue	40mm Head, 12VAC/DC	2ALM6LB-012
☐	Clear	40mm Head, 12VAC/DC	2ALM7LB-012
■	Yellow	40mm Head, 12VAC/DC	2ALM8LB-012
	24V AC/DC		
☐	White	40mm Head, 24VAC/DC	2ALM1LB-024
■	Green	40mm Head, 24VAC/DC	2ALM3LB-024
■	Red	40mm Head, 24VAC/DC	2ALM4LB-024
■	Amber	40mm Head, 24VAC/DC	2ALM5LB-024
■	Blue	40mm Head, 24VAC/DC	2ALM6LB-024
☐	Clear	40mm Head, 24VAC/DC	2ALM7LB-024
■	Yellow	40mm Head, 24VAC/DC	2ALM8LB-024
	48V AC/DC		
☐	White	40mm Head, 48VAC/DC	2ALM1LB-048
■	Green	40mm Head, 48VAC/DC	2ALM3LB-048
■	Red	40mm Head, 48VAC/DC	2ALM4LB-048
■	Amber	40mm Head, 48VAC/DC	2ALM5LB-048
■	Blue	40mm Head, 48VAC/DC	2ALM6LB-048
☐	Clear	40mm Head, 48VAC/DC	2ALM7LB-048
■	Yellow	40mm Head, 48VAC/DC	2ALM8LB-048
	110V AC*		
☐	White	40mm Head, 110VAC*	2ALM1LB-110
■	Green	40mm Head, 110VAC*	2ALM3LB-110
■	Red	40mm Head, 110VAC*	2ALM4LB-110
■	Amber	40mm Head, 110VAC*	2ALM5LB-110
■	Blue	40mm Head, 110VAC*	2ALM6LB-110
☐	Clear	40mm Head, 110VAC*	2ALM7LB-110
■	Yellow	40mm Head, 110VAC*	2ALM8LB-110
	230V AC*		
☐	White	40mm Head, 230VAC*	2ALM1LB-230
■	Green	40mm Head, 230VAC*	2ALM3LB-230
■	Red	40mm Head, 230VAC*	2ALM4LB-230
■	Amber	40mm Head, 230VAC*	2ALM5LB-230
■	Blue	40mm Head, 230VAC*	2ALM6LB-230
☐	Clear	40mm Head, 230VAC*	2ALM7LB-230
■	Yellow	40mm Head, 230VAC*	2ALM8LB-230

**110V DC and 230V DC version is available on request.*

Exploded Assembly View

- *Up to four switch contacts can be installed with any illuminated operators.*
- *Switch contacts and operators are sold separately. Preassembled push buttons are available on request.*

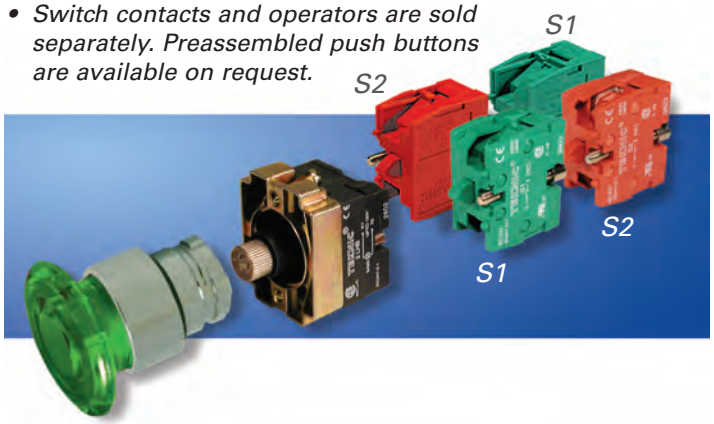

Altech Corp.® • 35 Royal Road • Flemington, NJ 08822-6000 • Phone (908)806-9400 • FAX (908)806-9490 • www.altechcorp.com

Altech

E225660

Certified for **NEMA Type 4X** 12 environment.

Mushroom Illuminated Push-Pull

with LED bulb, bulb holder and mounting bracket

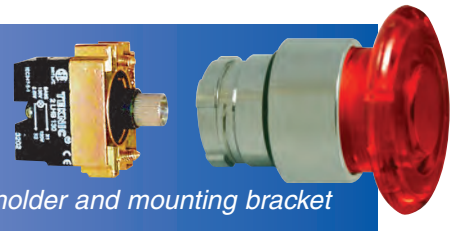

Dimensional Drawings

All dimensions shown in millimeters.
To convert to inches multiply by 0.03937

Illuminated Mushroom Push-Pull

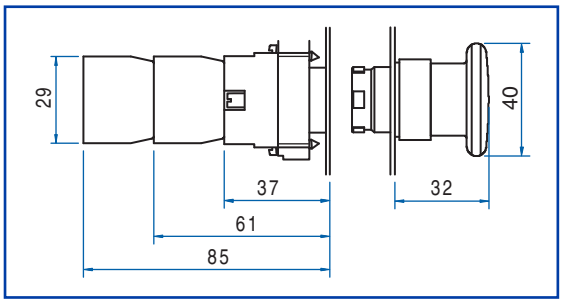

Switch Contacts

(sold separately)

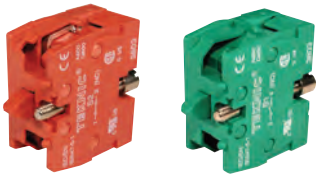

- Heavy-duty contact blocks with mounting screws. Blocks can be stacked 2 blocks across by 3 blocks deep for a total of 6 circuits.
- Contact blocks are available with silver contacts or gold plated contacts
- Self-wiping contacts

Panel Mount

Normally Open Silver	**S1**
Normally Closed Silver	**S2**
Normally Open Gold Plated	**S3**
Normally Closed Gold Plated	**S4**

Base Mount*

Normally Open Silver	**S5**
Normally Closed Silver	**S6**
Normally Open Gold Plated	**S7**
Normally Closed Gold Plated	**S8**

** For use with non-illuminated operators in thermoplastic or aluminum enclosures listed on pages 30 and 36-37.*

Color	Description	Cat No.
12V AC/DC		
White	40mm Head, 12VAC/DC	2ALMPP1LB-012
Green	40mm Head, 12VAC/DC	2ALMPP3LB-012
Red	40mm Head, 12VAC/DC	2ALMPP4LB-012
Amber	40mm Head, 12VAC/DC	2ALMPP5LB-012
Blue	40mm Head, 12VAC/DC	2ALMPP6LB-012
Clear	40mm Head, 12VAC/DC	2ALMPP7LB-012
Yellow	40mm Head, 12VAC/DC	2ALMPP8LB-012
24V AC/DC		
White	40mm Head, 24VAC/DC	2ALMPP1LB-024
Green	40mm Head, 24VAC/DC	2ALMPP3LB-024
Red	40mm Head, 24VAC/DC	2ALMPP4LB-024
Amber	40mm Head, 24VAC/DC	2ALMPP5LB-024
Blue	40mm Head, 24VAC/DC	2ALMPP6LB-024
Clear	40mm Head, 24VAC/DC	2ALMPP7LB-024
Yellow	40mm Head, 24VAC/DC	2ALMPP8LB-024
48V AC/DC		
White	40mm Head, 48VAC/DC	2ALMPP1LB-048
Green	40mm Head, 48VAC/DC	2ALMPP3LB-048
Red	40mm Head, 48VAC/DC	2ALMPP4LB-048
Amber	40mm Head, 48VAC/DC	2ALMPP5LB-048
Blue	40mm Head, 48VAC/DC	2ALMPP6LB-048
Clear	40mm Head, 48VAC/DC	2ALMPP7LB-048
Yellow	40mm Head, 48VAC/DC	2ALMPP8LB-048
110V AC*		
White	40mm Head, 110VAC*	2ALMPP1LB-110
Green	40mm Head, 110VAC*	2ALMPP3LB-110
Red	40mm Head, 110VAC*	2ALMPP4LB-110
Amber	40mm Head, 110VAC*	2ALMPP5LB-110
Blue	40mm Head, 110VAC*	2ALMPP6LB-110
Clear	40mm Head, 110VAC*	2ALMPP7LB-110
Yellow	40mm Head, 110VAC*	2ALMPP8LB-110
230V AC*		
White	40mm Head, 230VAC*	2ALMPP1LB-230
Green	40mm Head, 230VAC*	2ALMPP3LB-230
Red	40mm Head, 230VAC*	2ALMPP4LB-230
Amber	40mm Head, 230VAC*	2ALMPP5LB-230
Blue	40mm Head, 230VAC*	2ALMPP6LB-230
Clear	40mm Head, 230VAC*	2ALMPP7LB-230
Yellow	40mm Head, 230VAC*	2ALMPP8LB-230

**110V DC and 230V DC version is available on request.*

Exploded Assembly View

- *Up to four switch contacts can be installed with any illuminated operators.*
- *Switch contacts and operators are sold separately. Preassembled push buttons are available on request.*

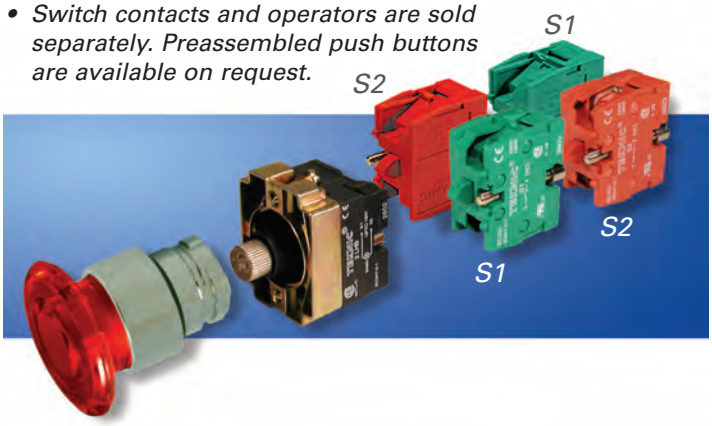

22mm Twin Touch Metal Non-Illuminated Operators

Twin Touch/ Not Marked
with mounting bracket

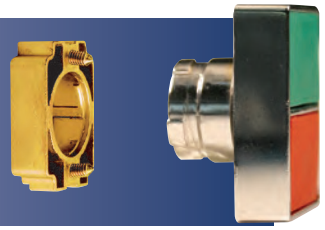

Color	Description	Cat No.
GREEN-RED	Flush	2ATF3-F4
YELLOW-BLACK	Flush	2ATF8-F2
BLACK-WHITE	Flush	2ATF2-F1
GREEN-RED	Green Flush, Red Projecting	2ATF3-P4
YELLOW-BLACK	Yellow Flush, Black Projecting	2ATF8-P2
WHITE-BLACK	White Flush, Black Projecting	2ATF1-P2

Arrows marking available upon request.

Twin Touch I-O Marked
with mounting bracket

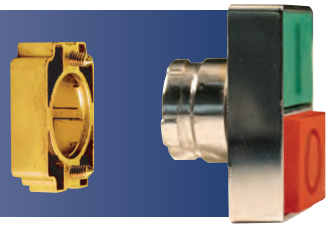

Color	Description	Cat No.
GREEN-RED	Flush	2ATF3-F4-IO
YELLOW-BLACK	Flush	2ATF8-F2-IO
BLACK-WHITE*	Flush	2ATF2-F1-IO
GREEN-RED	Green Flush, Red Projecting	2ATF3-P4-IO
YELLOW-BLACK	Yellow Flush, Black Projecting	2ATF8-P2-IO
WHITE-BLACK*	White Flush, Black Projecting	2ATF1-P2-IO

**Comply with vision impaired requirements.*

Arrows marking available upon request.

Exploded Assembly View

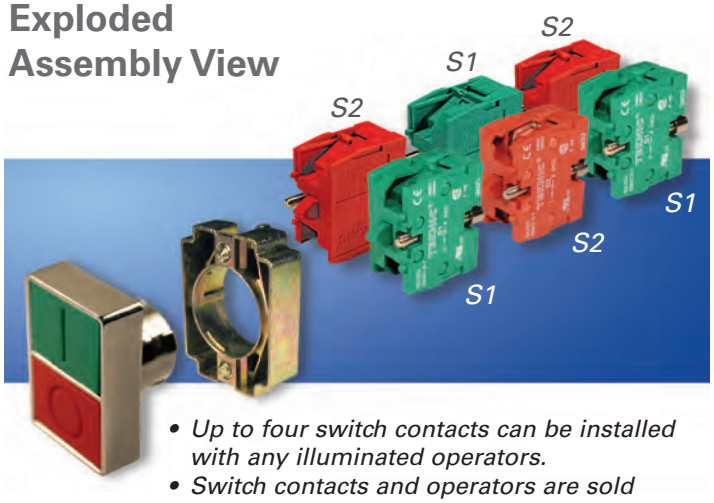

- *Up to four switch contacts can be installed with any illuminated operators.*
- *Switch contacts and operators are sold separately. Preassembled push buttons are available on request.*

Dimensional Drawings
All dimensions shown in millimeters.
To convert to inches multiply by 0.03937

Twin Touch/ Flush

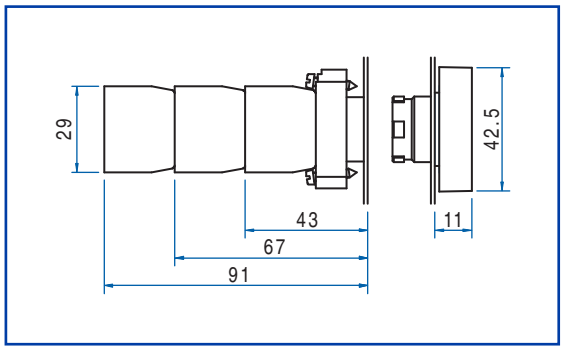

Twin Touch/ Flush/ Projecting

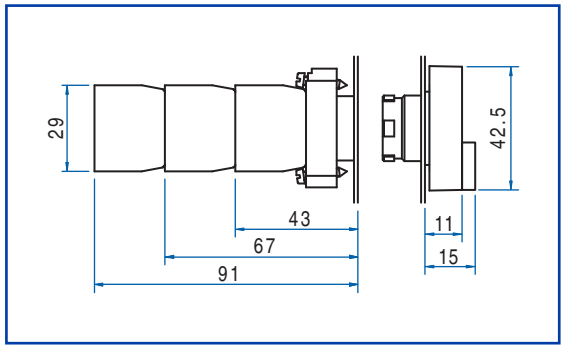

Switch Contacts
(sold separately)

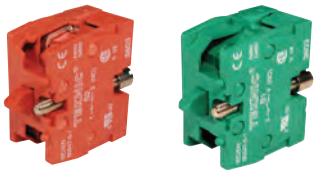

- Heavy-duty contact blocks with mounting screws. Blocks can be stacked 2 blocks across by 3 blocks deep for a total of 6 circuits.
- Contact blocks are available with silver contacts or gold plated contacts
- Self-wiping contacts

	Panel Mount Cat No.	Base Mount* Cat No.
Normally Open Silver	**S1**	**S5**
Normally Closed Silver	**S2**	**S6**
Normally Open Gold plated	**S3**	**S7**
Normally Closed Gold plated	**S4**	**S8**

**For use with non-illuminated operators in thermoplastic or aluminum enclosures listed on pages 30 and 36-37.*

Altech Corp.® • 35 Royal Road • Flemington, NJ 08822-6000 • Phone (908)806-9400 • FAX (908)806-9490 • www.altechcorp.com

22mm Twin Touch Metal LED Illuminated Operators

Illuminated Center Twin Touch/ Not Marked

with LED bulb, bulb holder and mounting bracket

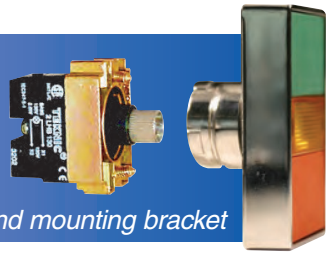

Arrows marking available upon request.
Other lense colors available upon request.

	Color	Description	Cat No.
	GREEN-RED, Flush, Illuminated Center		
	Amber	12VAC/DC	2ATL5LB F3F4-012
	Amber	24VAC/DC	2ATL5LB F3F4-024
	Amber	48VAC/DC	2ATL5LB F3F4-048
	Amber	110VAC**	2ATL5LB F3F4-110
	Amber	230VAC**	2ATL5LB F3F4-230
	GREEN-RED, Green Flush/ Red Projecting, Illuminated center		
	Amber	12VAC/DC	2ATL5LB F3P4-012
	Amber	24VAC/DC	2ATL5LB F3P4-024
	Amber	48VAC/DC	2ATL5LB F3P4-048
	Amber	110VAC**	2ATL5LB F3P4-110
	Amber	230VAC**	2ATL5LB F3P4-230

Illuminated Center Twin Touch/ I-O Marked

with LED bulb, bulb holder and mounting bracket

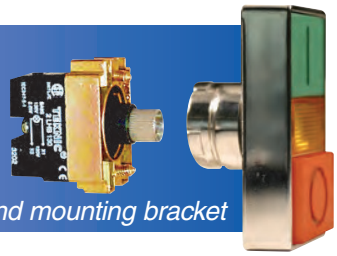

Arrows marking available upon request.
Other lense colors available upon request.

	Color	Description	Cat No.
	GREEN-RED, Flush, Illuminated Center		
	Amber	12VAC/DC	2ATL5LB F3F4-IO-012
	Amber	24VAC/DC	2ATL5LB F3F4-IO-024
	Amber	48VAC/DC	2ATL5LB F3F4-IO-048
	Amber	110VAC**	2ATL5LB F3F4-IO-110
	Amber	230VAC**	2ATL5LB F3F4-IO-230
	GREEN-RED, Green Flush/ Red Projecting, Illuminated Center		
	Amber	12VAC/DC	2ATL5LB F3P4-IO-012
	Amber	24VAC/DC	2ATL5LB F3P4-IO-024
	Amber	48VAC/DC	2ATL5LB F3P4-IO-048
	Amber	110VAC**	2ATL5LB F3P4-IO-110
	Amber	230VAC**	2ATL5LB F3P4-IO-230
	WHITE-BLACK, Flush, Illuminated Center*		
	Amber	12VAC/DC	2ATL5LB F2F1-IO-012
	Amber	24VAC/DC	2ATL5LB F2F1-IO-024
	Amber	48VAC/DC	2ATL5LB F2F1-IO-048
	Amber	110VAC**	2ATL5LB F2F1-IO-110
	Amber	230VAC**	2ATL5LB F2F1-IO-230

* *Comply with vision impaired requirements.*
** *110V DC and 230V DC version is available on request.*

Dimensional Drawings

All dimensions shown in millimeters.
To convert to inches multiply by 0.03937

Illuminated Twin Touch/ Flush

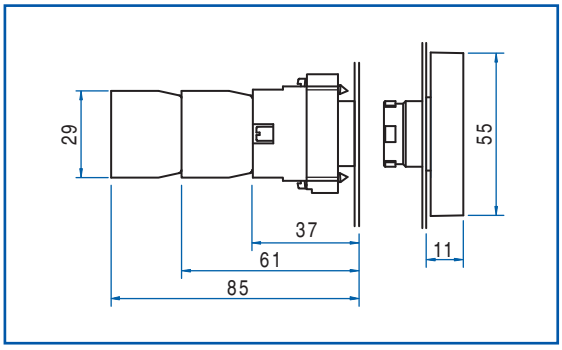

Illuminated Twin Touch/ Flush/ Projecting

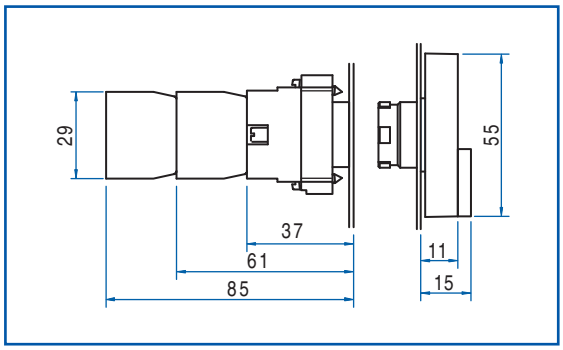

Exploded Assembly View

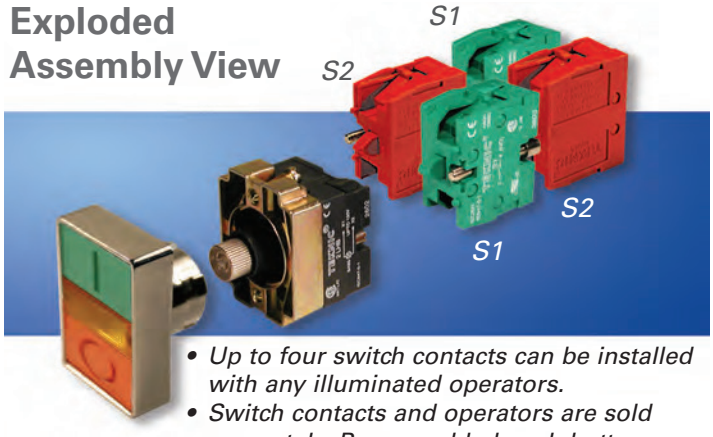

- *Up to four switch contacts can be installed with any illuminated operators.*
- *Switch contacts and operators are sold separately. Preassembled push buttons are available on request.*

Switch Contacts

(sold separately)

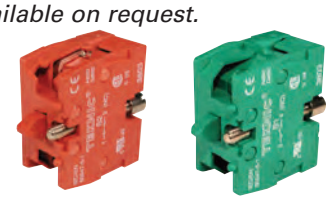

	Panel Mount Cat No.	Base Mount* Cat No.
Normally Open Silver	**S1**	**S5**
Normally Closed Silver	**S2**	**S6**
Normally Open Gold plated	**S3**	**S7**
Normally Closed Gold plated	**S4**	**S8**

* *For use with non-illuminated operators in thermoplastic or aluminum enclosures listed on pages 30 and 36-37.*

22mm Non-Illuminated Metal Selector Switch Operators

E225660

Certified for **NEMA Type 4X** 12 environment.

Key Selector

with mounting bracket



Other key combinations and colors are available on request.
All keys are “keyed alike”. Different keys are available on request.

Color	Description	Key Removal	Cat No.
Black	Maintained	Left/Right	2AK2-01
Black	Maintained	Left	2AK2-02
Black	Maintained	Right	2AK2-03
Black	Spring Return	Left	2AK2-04
Black	Maintained	Left/Right	2AK2-05
Black	Maintained	All	2AK2-06
Black	Maintained	Center	2AK2-07
Black	Spring Return	Center	2AK2-08
Black	Spring Return	Center	2AK2-09
Black	Spring Return	Center	2AK2-10
Black	Maintained	Left	2AK2-11
Replacement Key			**2KY455**

Selector

with mounting bracket



Other colors are available on request.

Color	Description	Cat No.
Black	Maintained	2AS2-1
Black	Spring Return	2AS2-2
Black	Maintained	2AS2-3
Black	Spring Return	2AS2-4
Black	Spring Return	2AS2-5
Black	Spring Return	2AS2-6

Extended Selector

with mounting bracket



Other colors are available on request.

Color	Description	Cat No.
Black	Maintained	2AS2E-1
Black	Spring Return	2AS2E-2
Black	Maintained	2AS2E-3
Black	Spring Return	2AS2E-4
Black	Spring Return	2AS2E-5
Black	Spring Return	2AS2E-6



Markings on Request



Altech Push Buttons are available in a variety of markings, including molded arrows. Please contact Altech for further information and part numbers.

Switch Contacts

(sold separately)

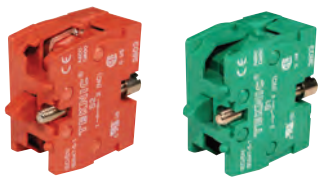

- Heavy-duty contact blocks with mounting screws. Blocks can be stacked 2 blocks across by 3 blocks deep for a total of 6 circuits.
- Contact blocks are available with silver contacts or gold plated contacts
- Self-wiping contacts

Panel Mount

Normally Open Silver	**S1**
Normally Closed Silver	**S2**
Normally Open Gold Plated	**S3**
Normally Closed Gold Plated	**S4**

Base Mount*

Normally Open Silver	**S5**
Normally Closed Silver	**S6**
Normally Open Gold Plated	**S7**
Normally Closed Gold Plated	**S8**

** For use with non-illuminated operators in thermoplastic or aluminum enclosures listed on pages 30 and 36-37.*

Altech Corp.® • 35 Royal Road • Flemington, NJ 08822-6000 • Phone (908)806-9400 • FAX (908)806-9490 • www.altechcorp.com

Dimensional Drawings

All dimensions shown in millimeters.
To convert to inches multiply by 0.03937

Key Selector

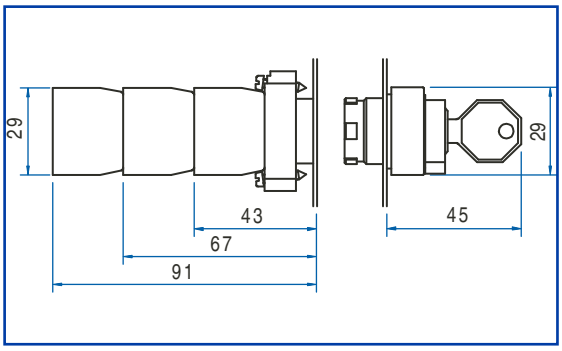

Extended Selector

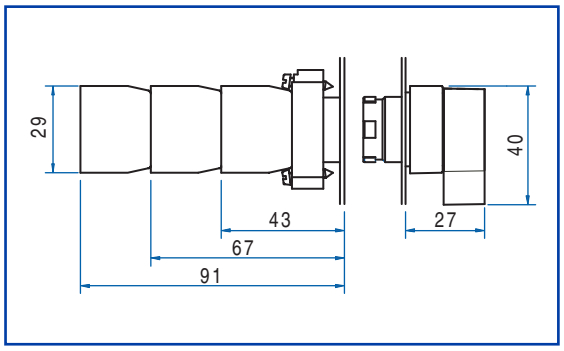

3 POSITION
SELECTOR SWITCH
CONTACT BLOCK GUIDE

			CONTACTOR BLOCK GUIDE
×	O	O	1 NO (left)
O	×	O	2 NC in series (side × side)
O	O	×	1 NO (right)
×	×	O	1 NC (right)
O	×	×	1 NC (left)
×	O	×	2 NO in parallel (side × side)

(Left or right as seen from front of operator)

Selector

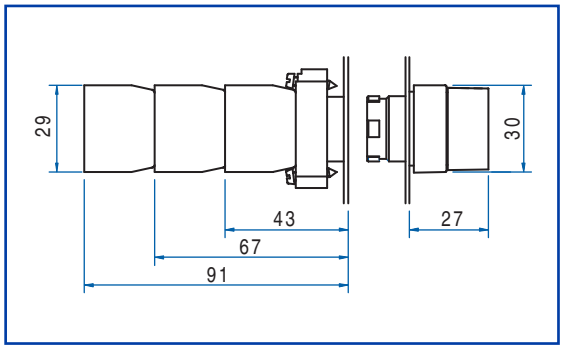

Exploded Assembly View

- *Up to six switch contacts can be installed on any non-Illuminated operator.*
- *Switch contacts and operators are sold separately. Preassembled push buttons are available on request.*

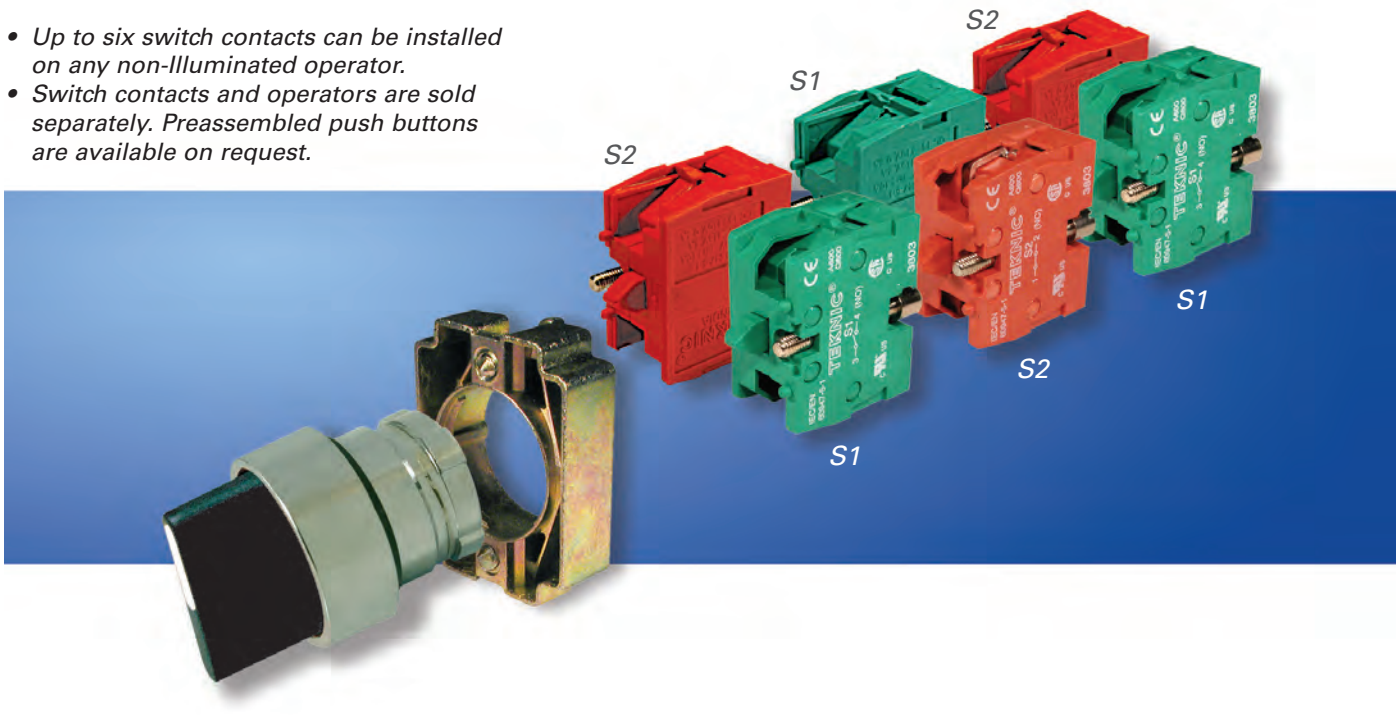

22mm LED Illuminated Metal Selector Switch Operators

E225660

Certified for **NEMA Type 4X** 12 environment.

Selector

with bulb holder, LED bulb and mounting bracket

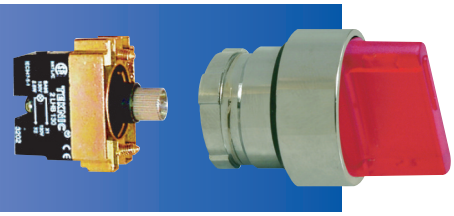

Other combinations and colors available upon request.
Please contact Altech for further information and part numbers.

XXX = Voltage Codes

012	=	12VAC/DC
024	=	24VAC/DC
048	=	48VAC/DC
110	=	110VAC/DC
230	=	230VAC
230D	=	230VDC

SAMPLE ASSEMBLY



Push button assemblies are available in a variety of custom configurations.



Replacement bulbs available. See page 39.

	Color	Function	Cat No.
	2 Position		
☐	White	Maintained	2ASL1LB-1-XXX
☐	Green	Maintained	2ASL3LB-1-XXX
☐	Red	Maintained	2ASL4LB-1-XXX
☐	Amber	Maintained	2ASL5LB-1-XXX
☐	Blue	Maintained	2ASL6LB-1-XXX
☐	Clear	Maintained	2ASL7LB-1-XXX
☐	Yelllow	Maintained	2ASL8LB-1-XXX
	2 Position		
☐	White	Spring Return	2ASL1LB-2-XXX
☐	Green	Spring Return	2ASL3LB-2-XXX
☐	Red	Spring Return	2ASL4LB-2-XXX
☐	Amber	Spring Return	2ASL5LB-2-XXX
☐	Blue	Spring Return	2ASL6LB-2-XXX
☐	Clear	Spring Return	2ASL7LB-2-XXX
☐	Yelllow	Spring Return	2ASL8LB-2-XXX
	3 Position		
☐	White	Maintained	2ASL1LB-3-XXX
☐	Green	Maintained	2ASL3LB-3-XXX
☐	Red	Maintained	2ASL4LB-3-XXX
☐	Amber	Maintained	2ASL5LB-3-XXX
☐	Blue	Maintained	2ASL6LB-3-XXX
☐	Clear	Maintained	2ASL7LB-3-XXX
☐	Yelllow	Maintained	2ASL8LB-3-XXX
	3 Position, *spring return from left and right*		
☐	White	Spring Return	2ASL1LB-4-XXX
☐	Green	Spring Return	2ASL3LB-4-XXX
☐	Red	Spring Return	2ASL4LB-4-XXX
☐	Amber	Spring Return	2ASL5LB-4-XXX
☐	Blue	Spring Return	2ASL6LB-4-XXX
☐	Clear	Spring Return	2ASL7LB-4-XXX
☐	Yelllow	Spring Return	2ASL8LB-4-XXX
	3 Position, *spring return from right*		
☐	White	Spring Return	2ASL1LB-5-XXX
☐	Green	Spring Return	2ASL3LB-5-XXX
☐	Red	Spring Return	2ASL4LB-5-XXX
☐	Amber	Spring Return	2ASL5LB-5-XXX
☐	Blue	Spring Return	2ASL6LB-5-XXX
☐	Clear	Spring Return	2ASL7LB-5-XXX
☐	Yelllow	Spring Return	2ASL8LB-5-XXX
	3 Position, *spring return from left*		
☐	White	Spring Return	2ASL1LB-6-XXX
☐	Green	Spring Return	2ASL3LB-6-XXX
☐	Red	Spring Return	2ASL4LB-6-XXX
☐	Amber	Spring Return	2ASL5LB-6-XXX
☐	Blue	Spring Return	2ASL6LB-6-XXX
☐	Clear	Spring Return	2ASL7LB-6-XXX
☐	Yelllow	Spring Return	2ASL8LB-6-XXX

Altech Corp.® • 35 Royal Road • Flemington, NJ 08822-6000 • Phone (908)806-9400 • FAX (908)806-9490 • www.altechcorp.com

Dimensional Drawings

All dimensions shown in millimeters.
To convert to inches multiply by 0.03937

3 POSITION
SELECTOR SWITCH
CONTACT BLOCK GUIDE

			CONTACTOR BLOCK GUIDE
×	O	O	1 NO (left)
O	×	O	2 NC in series (side × side)
O	O	×	1 NO (right)
×	×	O	1 NC (right)
O	×	×	1 NC (left)
×	O	×	2 NO in parallel (side × side)

(Left or right as seen from front of operator)

Illuminated Selector

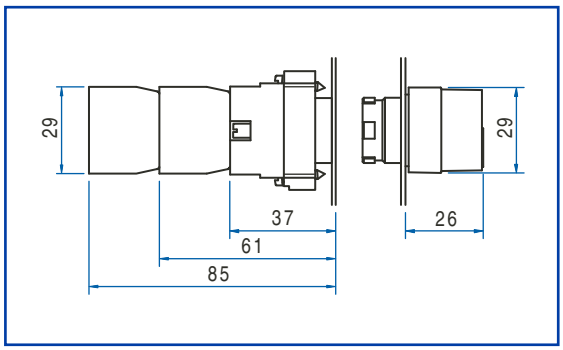

Switch Contacts

(sold separately)

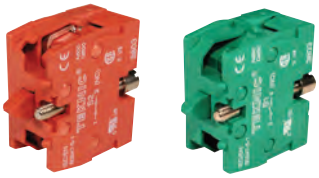

- Heavy-duty contact blocks with mounting screws. Blocks can be stacked 2 blocks across by 3 blocks deep for a total of 6 circuits.
- Contact blocks are available with silver contacts or gold plated contacts
- Self-wiping contacts

Panel Mount

Normally Open Silver	**S1**
Normally Closed Silver	**S2**
Normally Open Gold Plated	**S3**
Normally Closed Gold Plated	**S4**

Base Mount*

Normally Open Silver	**S5**
Normally Closed Silver	**S6**
Normally Open Gold Plated	**S7**
Normally Closed Gold Plated	**S8**

** For use with non-illuminated operators in thermoplastic or aluminum enclosures listed on pages 30 and 36-37.*

Exploded Assembly View

- *Up to four switch contacts can be installed with any Illuminated operator.*
- *Switch contacts and operators are sold separately. Preassembled push buttons are available on request.*

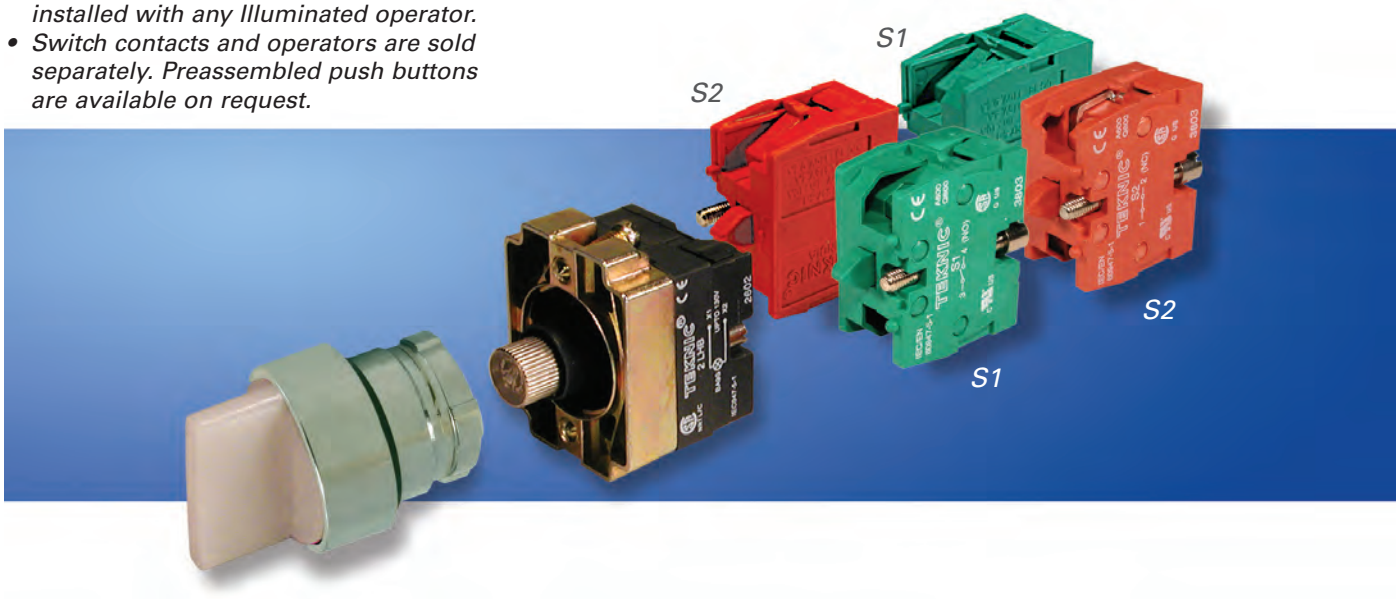

22mm LED Illuminated Metal Projecting Operators

E225660

Certified for **NEMA Type 4X** 12 environment.

Projecting Momentary

withbulb, bulb holder and mounting bracket

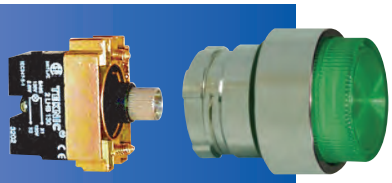

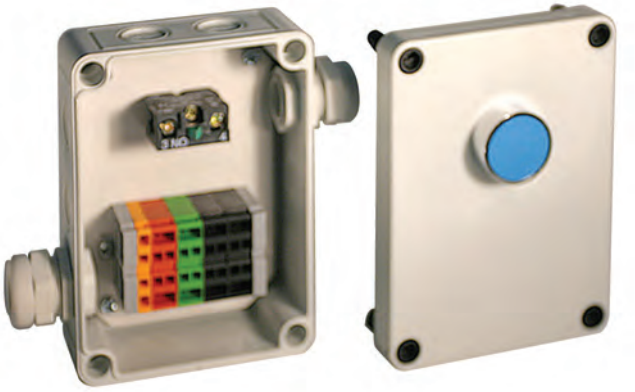

SAMPLE ASSEMBLY



Replacement bulbs available.
See page 39.

Color	Voltage	Cat No.
12V AC/DC		
White	12V AC/DC	2ALP1LB-012
Green	12V AC/DC	2ALP3LB-012
Red	12V AC/DC	2ALP4LB-012
Amber	12V AC/DC	2ALP5LB-012
Blue	12V AC/DC	2ALP6LB-012
Clear	12V AC/DC	2ALP7LB-012
Yelllow	12V AC/DC	2ALP8LB-012
24V AC/DC		
White	24V AC/DC	2ALP1LB-024
Green	24V AC/DC	2ALP3LB-024
Red	24V AC/DC	2ALP4LB-024
Amber	24V AC/DC	2ALP5LB-024
Blue	24V AC/DC	2ALP6LB-024
Clear	24V AC/DC	2ALP7LB-024
Yelllow	24V AC/DC	2ALP8LB-024
48V AC/DC		
White	48V AC/DC	2ALP1LB-048
Green	48V AC/DC	2ALP3LB-048
Red	48V AC/DC	2ALP4LB-048
Amber	48V AC/DC	2ALP5LB-048
Blue	48V AC/DC	2ALP6LB-048
Clear	48V AC/DC	2ALP7LB-048
Yelllow	48V AC/DC	2ALP8LB-048
110V AC		
White	110V AC	2ALP1LB-110
Green	110V AC	2ALP3LB-110
Red	110V AC	2ALP4LB-110
Amber	110V AC	2ALP5LB-110
Blue	110V AC	2ALP6LB-110
Clear	110V AC	2ALP7LB-110
Yelllow	110V AC	2ALP8LB-110
110V DC		
White	110V DC	2ALP1LB-110D
Green	110V DC	2ALP3LB-110D
Red	110V DC	2ALP4LB-110D
Amber	110V DC	2ALP5LB-110D
Blue	110V DC	2ALP6LB-110D
Clear	110V DC	2ALP7LB-110D
Yelllow	110V DC	2ALP8LB-110D
230V AC		
White	230V AC	2ALP1LB-230
Green	230V AC	2ALP3LB-230
Red	230V AC	2ALP4LB-230
Amber	230V AC	2ALP5LB-230
Blue	230V AC	2ALP6LB-230
Clear	230V AC	2ALP7LB-230
Yelllow	230V AC	2ALP8LB-230
230V DC		
White	230V DC	2ALP1LB-230D
Green	230V DC	2ALP3LB-230D
Red	230V DC	2ALP4LB-230D
Amber	230V DC	2ALP5LB-230D
Blue	230V DC	2ALP6LB-230D
Clear	230V DC	2ALP7LB-230D
Yelllow	230V DC	2ALP8LB-230D

Altech Corp.® • 35 Royal Road • Flemington, NJ 08822-6000 • Phone (908)806-9400 • FAX (908)806-9490 • www.altechcorp.com

22mm LED Illuminated Metal Projecting Operators

Dimensional Drawings

All dimensions shown in millimeters.
To convert to inches multiply by 0.03937

Projecting Momentary

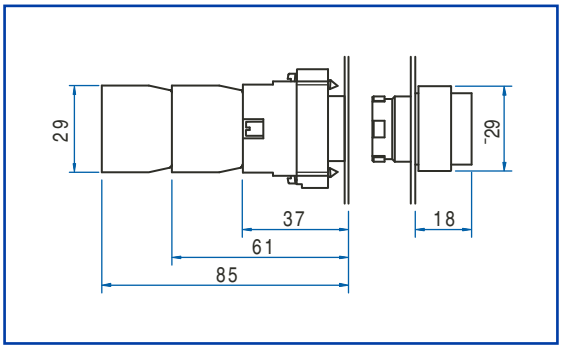

Switch Contacts

(sold separately)

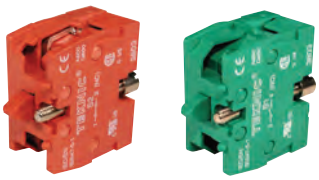

- Heavy-duty contact blocks with mounting screws. Blocks can be stacked 2 blocks across by 3 blocks deep for a total of 6 circuits.
- Contact blocks are available with silver contacts or gold plated contacts
- Self-wiping contacts

Panel Mount

Normally Open Silver	**S1**
Normally Closed Silver	**S2**
Normally Open Gold Plated	**S3**
Normally Closed Gold Plated	**S4**

Base Mount*

Normally Open Silver	**S5**
Normally Closed Silver	**S6**
Normally Open Gold Plated	**S7**
Normally Closed Gold Plated	**S8**

** For use with non-illuminated operators in thermoplastic or aluminum enclosures listed on pages 30 and 36-37.*

Exploded Assembly View

- *Up to four switch contacts can be installed with any Illuminated operator.*
- *Switch contacts and operators are sold separately. Preassembled push buttons are available on request.*

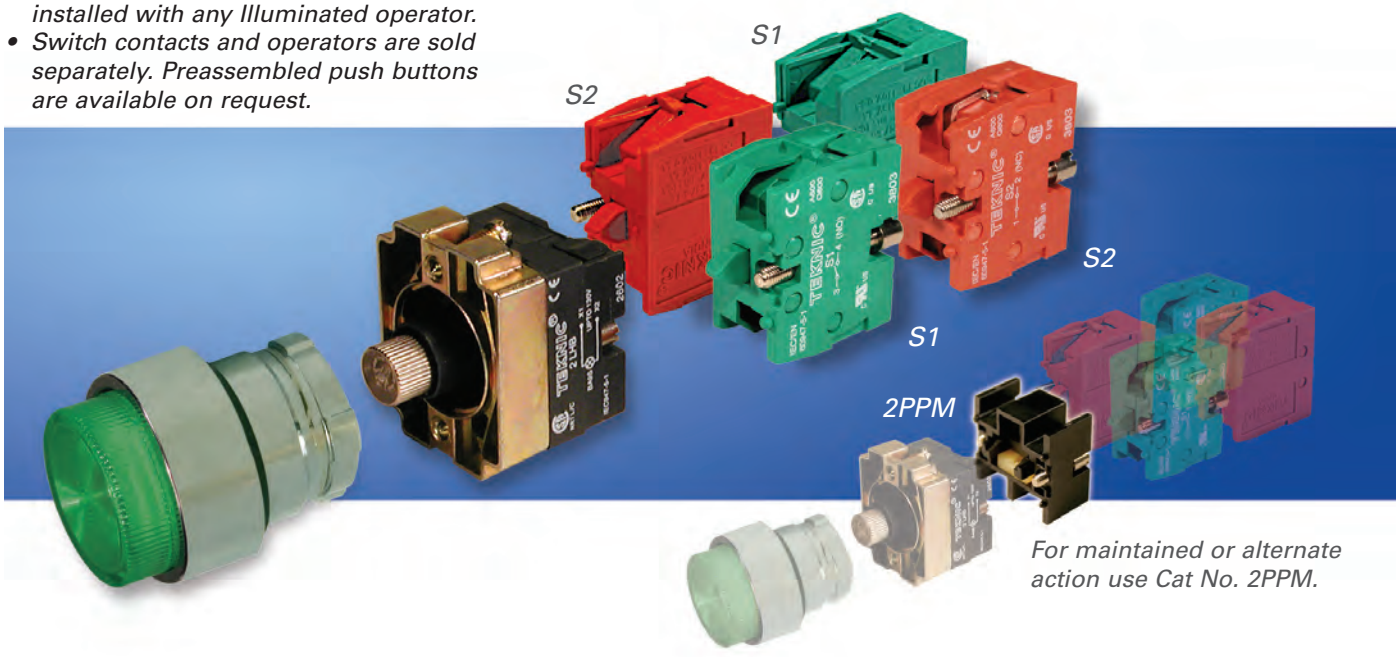

For maintained or alternate action use Cat No. 2PPM.

22mm LED Illuminated Metal Flush Operators

E225660

Certified for **NEMA Type 4X** 12 environment.

Flush Momentary

with bulb, bulb holder and mounting bracket

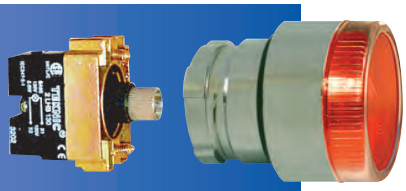

SAMPLE ASSEMBLY



For installation of a metal operator in the plastic enclosure a Cat No. ADW washer is required.



Replacement bulbs available. See page 39.

Color	Voltage	Cat No.
12V AC/DC		
White	12V AC/DC	2ALF1LB-012
Green	12V AC/DC	2ALF3LB-012
Red	12V AC/DC	2ALF4LB-012
Amber	12V AC/DC	2ALF5LB-012
Blue	12V AC/DC	2ALF6LB-012
Clear	12V AC/DC	2ALF7LB-012
Yelllow	12V AC/DC	2ALF8LB-012
24V AC/DC		
White	24V AC/DC	2ALF1LB-024
Green	24V AC/DC	2ALF3LB-024
Red	24V AC/DC	2ALF4LB-024
Amber	24V AC/DC	2ALF5LB-024
Blue	24V AC/DC	2ALF6LB-024
Clear	24V AC/DC	2ALF7LB-024
Yelllow	24V AC/DC	2ALF8LB-024
48V AC/DC		
White	48V AC/DC	2ALF1LB-048
Green	48V AC/DC	2ALF3LB-048
Red	48V AC/DC	2ALF4LB-048
Amber	48V AC/DC	2ALF5LB-048
Blue	48V AC/DC	2ALF6LB-048
Clear	48V AC/DC	2ALF7LB-048
Yelllow	48V AC/DC	2ALF8LB-048
110V AC		
White	110V AC	2ALF1LB-110
Green	110V AC	2ALF3LB-110
Red	110V AC	2ALF4LB-110
Amber	110V AC	2ALF5LB-110
Blue	110V AC	2ALF6LB-110
Clear	110V AC	2ALF7LB-110
Yelllow	110V AC	2ALF8LB-110
110V DC		
White	110V DC	2ALF1LB-110D
Green	110V DC	2ALF3LB-110D
Red	110V DC	2ALF4LB-110D
Amber	110V DC	2ALF5LB-110D
Blue	110V DC	2ALF6LB-110D
Clear	110V DC	2ALF7LB-110D
Yelllow	110V DC	2ALF8LB-110D
230V AC		
White	230V AC	2ALF1LB-230
Green	230V AC	2ALF3LB-230
Red	230V AC	2ALF4LB-230
Amber	230V AC	2ALF5LB-230
Blue	230V AC	2ALF6LB-230
Clear	230V AC	2ALF7LB-230
Yelllow	230V AC	2ALF8LB-230
230V DC		
White	230V DC	2ALF1LB-230D
Green	230V DC	2ALF3LB-230D
Red	230V DC	2ALF4LB-230D
Amber	230V DC	2ALF5LB-230D
Blue	230V DC	2ALF6LB-230D
Clear	230V DC	2ALF7LB-230D
Yelllow	230V DC	2ALF8LB-230D

Altech Corp.® • 35 Royal Road • Flemington, NJ 08822-6000 • Phone (908)806-9400 • FAX (908)806-9490 • www.altechcorp.com

22mm LED Illuminated Metal Flush Operators

Dimensional Drawings

All dimensions shown in millimeters.
To convert to inches multiply by 0.03937

Flush Momentary

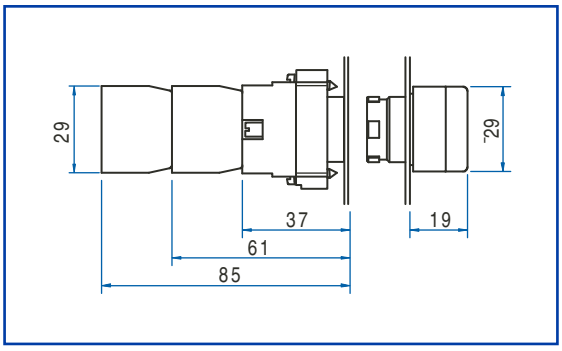

Switch Contacts

(sold separately)

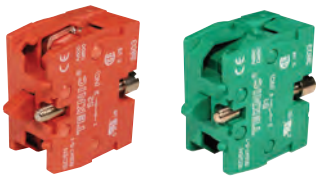

- Heavy-duty contact blocks with mounting screws. Blocks can be stacked 2 blocks across by 3 blocks deep for a total of 6 circuits.
- Contact blocks are available with silver contacts or gold plated contacts
- Self-wiping contacts

Panel Mount

Normally Open Silver	**S1**
Normally Closed Silver	**S2**
Normally Open Gold Plated	**S3**
Normally Closed Gold Plated	**S4**

Base Mount*

Normally Open Silver	**S5**
Normally Closed Silver	**S6**
Normally Open Gold Plated	**S7**
Normally Closed Gold Plated	**S8**

** For use with non-illuminated operators in thermoplastic or aluminum enclosures listed on pages 30 and 36-37.*

Exploded Assembly View

- *Up to four switch contacts can be installed with any Illuminated operator.*
- *Switch contacts and operators are sold separately. Preassembled push buttons are available on request.*

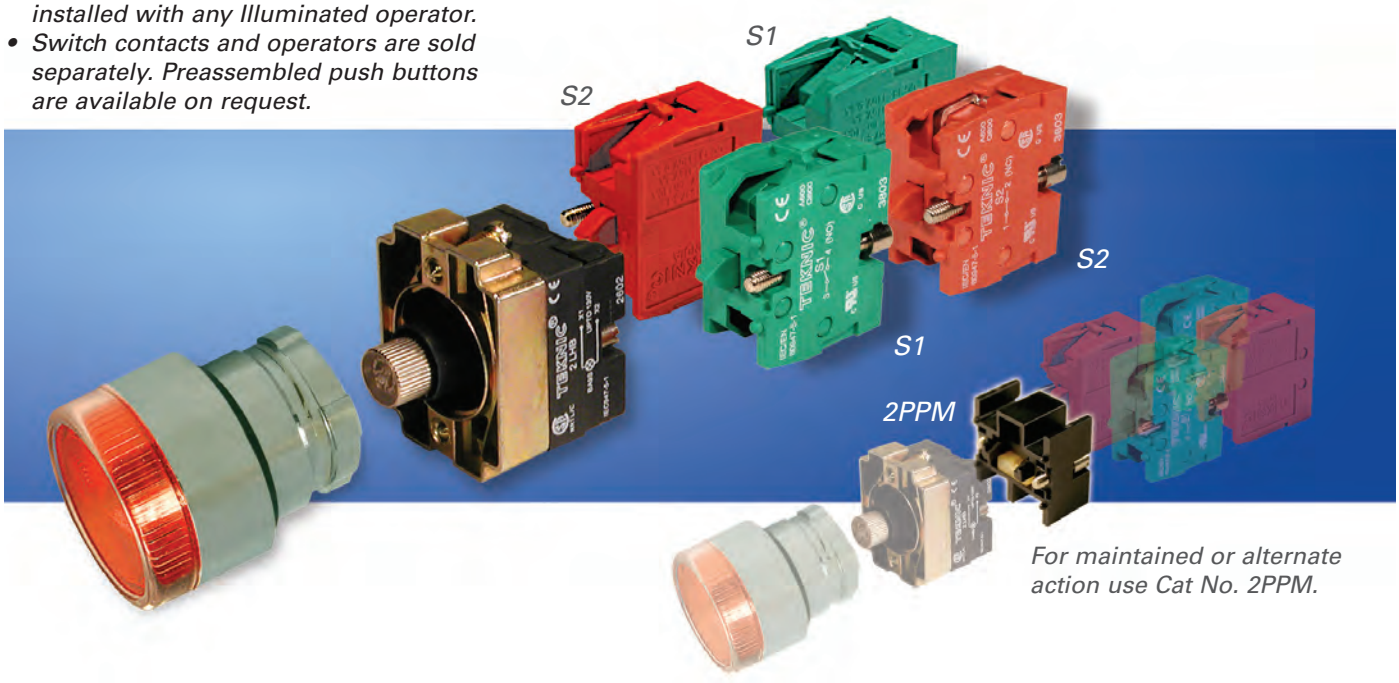

For maintained or alternate action use Cat No. 2PPM.

22mm LED Metal Pilot Lights

E225660

Certified for
NEMA Type 4X
12 environment.

Pilot Light

with bulb, bulb holder and mounting bracket

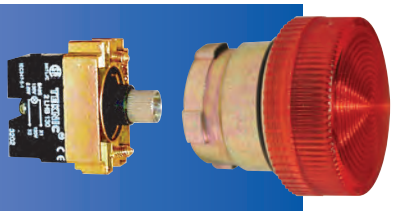

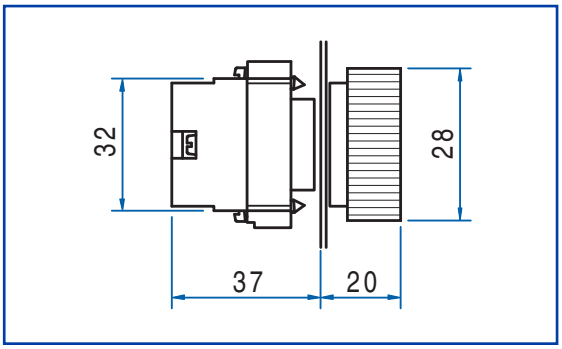



Replacement bulbs available.
See page 39.

Color	Voltage	Cat No.
12V AC/DC		
White	12V AC/DC	2PLB1LB-012
Green	12V AC/DC	2PLB3LB-012
Red	12V AC/DC	2PLB4LB-012
Amber	12V AC/DC	2PLB5LB-012
Blue	12V AC/DC	2PLB6LB-012
Clear	12V AC/DC	2PLB7LB-012
Yelllow	12V AC/DC	2PLB8LB-012
24V AC/DC		
White	24V AC/DC	2PLB1LB-024
Green	24V AC/DC	2PLB3LB-024
Red	24V AC/DC	2PLB4LB-024
Amber	24V AC/DC	2PLB5LB-024
Blue	24V AC/DC	2PLB6LB-024
Clear	24V AC/DC	2PLB7LB-024
Yelllow	24V AC/DC	2PLB8LB-024
48V AC/DC		
White	48V AC/DC	2PLB1LB-048
Green	48V AC/DC	2PLB3LB-048
Red	48V AC/DC	2PLB4LB-048
Amber	48V AC/DC	2PLB5LB-048
Blue	48V AC/DC	2PLB6LB-048
Clear	48V AC/DC	2PLB7LB-048
Yelllow	48V AC/DC	2PLB8LB-048
110V AC		
White	110V AC	2PLB1LB-110
Green	110V AC	2PLB3LB-110
Red	110V AC	2PLB4LB-110
Amber	110V AC	2PLB5LB-110
Blue	110V AC	2PLB6LB-110
Clear	110V AC	2PLB7LB-110
Yelllow	110V AC	2PLB8LB-110
110V DC		
White	110V DC	2PLB1LB-110D
Green	110V DC	2PLB3LB-110D
Red	110V DC	2PLB4LB-110D
Amber	110V DC	2PLB5LB-110D
Blue	110V DC	2PLB6LB-110D
Clear	110V DC	2PLB7LB-110D
Yelllow	110V DC	2PLB8LB-110D
230V AC		
White	230V AC	2PLB1LB-230
Green	230V AC	2PLB3LB-230
Red	230V AC	2PLB4LB-230
Amber	230V AC	2PLB5LB-230
Blue	230V AC	2PLB6LB-230
Clear	230V AC	2PLB7LB-230
Yelllow	230V AC	2PLB8LB-230
230V DC		
White	230V DC	2PLB1LB-230D
Green	230V DC	2PLB3LB-230D
Red	230V DC	2PLB4LB-230D
Amber	230V DC	2PLB5LB-230D
Blue	230V DC	2PLB6LB-230D
Clear	230V DC	2PLB7LB-230D
Yelllow	230V DC	2PLB8LB-230D

Altech Corp.® • 35 Royal Road • Flemington, NJ 08822-6000 • Phone (908)806-9400 • FAX (908)806-9490 • www.altechcorp.com

22mm Specifications

Electrical and Mechanical Characteristics

Standard conformity:	IEC 60947-5-1
Approvals:	VDE0660 CSA - C22.2 No. 14-95 UL508 IEC 947 - 5 (1) 1990, IS 13947 ASTA UK certified as per IEC 947 - 5 - (1) 1990
Degree of protection:	IP 65 as per IEC 529 NEMA Type 4X, 12 as per UL50
Temperature Range:	- 25°C to + 70°C (-13°F to +158°F)

Contact Block

Rated voltage:	600V AC /DC
Rated current:	10A AC / 2.5A DC
Contact operation:	self-wiping, slow break NO or NC
UL508 rating (pilot duty): CSA - C22.2 No. 14-95:	 A600: 10A; 600V AC Q600: 2.5A; 600V DC
Make and break capacity IEC 947 - 5 - (1) 1990:	 AC 15 4A, 415V AC DC 13 0.5A, 110V DC
Terminal capacity:	minimum 20 AWG (0.5 mm^2) maximum 2x16 AWG (2 x 1.5 mm^2) or 14 AWG (2.5 mm^2)
Terminal marking:	1-2 for NC, 3-4 for NO
Short circuit protection:	10A cartridge fuse HRC type, rated for resistive loads
Mechanical life:	1 million operations

Modules for Pilot Lights & Illuminated Switches with LED Bulbs

Current consumption (applicable to all colors)	
24 VAC/DC, 100 VAC & 240 VAC:	max. 20 mA
110 VDC:	max. 15 mA
220 VDC:	max. 10 mA
Service life (at nominal voltage and at ambient temperature of 25°C):	100,000 hours
Voltage limits (nominal voltage):	<20% of rated voltage>
Short circuit protection:	on specific request
Terminal capacity:	min. 1 x 0.5 mm^2 (20 AWG), max. 2 x 1.5 mm^2 (2x16 AWG) or 1 x 2.5 mm^2 (1x14 AWG)

Torque Specifications

Mounting bracket screws	1.2 Nm (10.8 lbs. in.)
Contact block to bracket screws	0.5 Nm (4.5 lbs. in.)
Terminal screws (wiring)	0.8 Nm (7.2 lbs. in.)

Economy Non-Illuminated Plastic Push Buttons

c UL us
E225660

Momentary







Color	Description & Function	Cat No.
Momentary		
White	Flush, 1NO Contact	3PSF110
Black	Flush, 1NO Contact	3PSF210
Green	Flush, 1NO Contact	3PSF310
Red	Flush, 1NO Contact	3PSF410
Blue	Flush, 1NO Contact	3PSF610
Yellow	Flush, 1NO Contact	3PSF810
White	Flush, 1NC Contact	3PSF101
Black	Flush, 1NC Contact	3PSF201
Green	Flush, 1NC Contact	3PSF301
Red	Flush, 1NC Contact	3PSF401
Blue	Flush, 1NC Contact	3PSF601
Yellow	Flush, 1NC Contact	3PSF801
White	Flush, 1NO + 1NC Contact	3PSF111
Black	Flush, 1NO + 1NC Contact	3PSF211
Green	Flush, 1NO + 1NC Contact	3PSF311
Red	Flush, 1NO + 1NC Contact	3PSF411
Blue	Flush, 1NO + 1NC Contact	3PSF611
Yellow	Flush, 1NO + 1NC Contact	3PSF811
White	Flush, 2NO Contact	3PSF120
Black	Flush, 2NO Contact	3PSF220
Green	Flush, 2NO Contact	3PSF320
Red	Flush, 2NO Contact	3PSF420
Blue	Flush, 2NO Contact	3PSF620
Yellow	Flush, 2NO Contact	3PSF820
White	Flush, 2NC Contact	3PSF102
Black	Flush, 2NC Contact	3PSF202
Green	Flush, 2NC Contact	3PSF302
Red	Flush, 2NC Contact	3PSF402
Blue	Flush, 2NC Contact	3PSF602
Yellow	Flush, 2NC Contact	3PSF802

Maintained







Color	Description & Function	Cat No.
Maintained		
White	Flush, 1NO Push-Push	3PSFPP110
Black	Flush, 1NO Push-Push	3PSFPP210
Green	Flush, 1NO Push-Push	3PSFPP310
Red	Flush, 1NO Push-Push	3PSFPP410
Blue	Flush, 1NO Push-Push	3PSFPP610
Yellow	Flush, 1NO Push-Push	3PSFPP810
White	Flush, 1NC Push-Push	3PSFPP101
Black	Flush, 1NC Push-Push	3PSFPP201
Green	Flush, 1NC Push-Push	3PSFPP301
Red	Flush, 1NC Push-Push	3PSFPP401
Blue	Flush, 1NC Push-Push	3PSFPP601
Yellow	Flush, 1NC Push-Push	3PSFPP801
White	Flush, 1NO + 1NC Push-Push	3PSFPP111
Black	Flush, 1NO + 1NC Push-Push	3PSFPP211
Green	Flush, 1NO + 1NC Push-Push	3PSFPP311
Red	Flush, 1NO + 1NC Push-Push	3PSFPP411
Blue	Flush, 1NO + 1NC Push-Push	3PSFPP611
Yellow	Flush, 1NO + 1NC Push-Push	3PSFPP811
White	Flush, 2NO Push-Push	3PSPP120
Black	Flush, 2NO Push-Push	3PSPP220
Green	Flush, 2NO Push-Push	3PSPP320
Red	Flush, 2NO Push-Push	3PSPP420
Blue	Flush, 2NO Push-Push	3PSPP620
Yellow	Flush, 2NO Push-Push	3PSPP820
White	Flush, 2NC Push-Push	3PSPP102
Black	Flush, 2NC Push-Push	3PSPP202
Green	Flush, 2NC Push-Push	3PSPP302
Red	Flush, 2NC Push-Push	3PSPP402
Blue	Flush, 2NC Push-Push	3PSPP602
Yellow	Flush, 2NC Push-Push	3PSPP802

Altech Corp.® • 35 Royal Road • Flemington, NJ 08822-6000 • Phone (908)806-9400 • FAX (908)806-9490 • www.altechcorp.com

Economy Non-Illuminated Plastic Push Buttons Specifications

A. Mechanical Characteristics

Contact Operation	NO/NC Slow Break
Operating Travel	Changing NC status = 2mm Changing NO status = 2mm Total travel = 3.5mm
Operating Force for 3PSF Series	Changing NC status = 4.22mm Changing NO status = 5.60mm Travel required to change NC status = 0.65mm Travel required to change NO status = 1.65 to 1.98mm Total travel = 3.8mm
Contact Configurations	1NO; 1NO + 1NC; 2NC
Terminal Torque	0.5Nm / 4.5lbs. in.

B. Mechanical Durability

Push Button, Spring Return	1 Million Operations
Push-Push Type	100,000 Operations
Applicable Standard	UL508; IS13947-5-1; CSA 22.2
Degree of Protection	IP65 (as per IS 13947)
Temperature Range	-25° to +85°C (-13°F to 180°F)

C. Electrical Characteristics

Rating	*For AC:* C300= 120V, make current 15A & break current 1.5A (thermal current=2.5A)
	For DC: R300= 125V, make or break current 0.22A (thermal current=1.0A)
Terminal Capacity for wiring	2 X 1.5mm²; 1 X 0.5mm² (min); 1 X 2.5mm² (max)
Contact Material	• Moving contact = Phosphor Bronze • Fixed Contact = Brass silver plated 2 microns
Short Circuit Protection	4A fuse
Dielectric Test	2.5KV
Rated insulation Resistance	500M ohm
Rated Thermal Current	2.5A

Dimensional Drawings

All dimensions shown in millimeters.
To convert to inches multiply by 0.03937

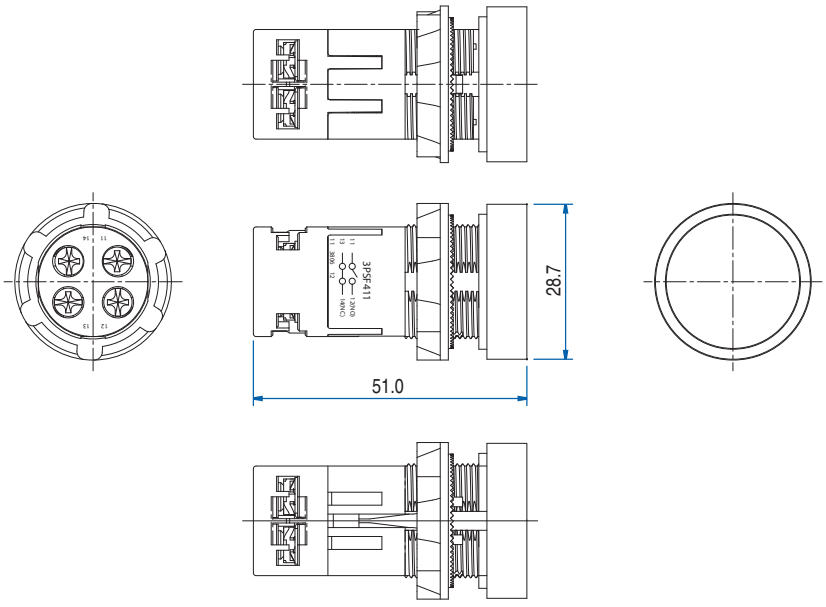

Unibody LED Indicator Plastic Pilot Lights

E225660

Pilot Lights
with integral LED



Color	Description	Cat No.
White Lens/Yellow LED	12V AC/DC	3PLBR1L-012
White Lens/Yellow LED	24V AC/DC	3PLBR1L-024
White Lens/Yellow LED	48V AC/DC	3PLBR1L-048
White Lens/Yellow LED	110V AC*	3PLBR1L-110
White Lens/Yellow LED	230V AC*	3PLBR1L-230



Color	Description	Cat No.
White Lens/White LED	12V AC/DC	3PLBR1LS-012
White Lens/White LED	24V AC/DC	3PLBR1LS-024
White Lens/White LED	48V AC/DC	3PLBR1LS-048
White Lens/White LED	110V AC*	3PLBR1LS-110
White Lens/White LED	230V AC*	3PLBR1LS-230



Color	Description	Cat No.
Green Lens/Green LED	12V AC/DC	3PLBR3L-012
Green Lens/Green LED	24V AC/DC	3PLBR3L-024
Green Lens/Green LED	48V AC/DC	3PLBR3L-048
Green Lens/Green LED	110V AC*	3PLBR3L-110
Green Lens/Green LED	230V AC*	3PLBR3L-230
Green Lens/Green LED	24-230V AC/DC	3PLBR3LU



Color	Description	Cat No.
Red Lens/Red LED	12V AC/DC	3PLBR4L-012
Red Lens/Red LED	24V AC/DC	3PLBR4L-024
Red Lens/Red LED	48V AC/DC	3PLBR4L-048
Red Lens/Red LED	110V AC*	3PLBR4L-110
Red Lens/Red LED	230V AC*	3PLBR4L-230
Red Lens/Red LED	24-230V AC/DC	3PLBR4LU

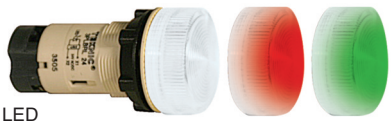

Multi color LED pilot light
Clear Lens / Red / Green LED

Color	Description	Cat No.
Clear Lens /Red/Green LED	12V AC/DC	3PLBR34L-012
Clear Lens /Red/Green LED	24V AC/DC	3PLBR34L-024
Clear Lens /Red/Green LED	48V AC/DC	3PLBR34L-048
Clear Lens /Red/Green LED	110V AC*	3PLBR34L-110
Clear Lens /Red/Green LED	230V AC*	3PLBR34L-230



Color	Description	Cat No.
Amber Lens/Amber LED	12V AC/DC	3PLBR5L-012
Amber Lens/Amber LED	24V AC/DC	3PLBR5L-024
Amber Lens/Amber LED	48V AC/DC	3PLBR5L-048
Amber Lens/Amber LED	110V AC*	3PLBR5L-110
Amber Lens/Amber LED	230V AC*	3PLBR5L-230



Color	Description	Cat No.
Blue Lens/Blue LED	12V AC/DC	3PLBR6L-012
Blue Lens/Blue LED	24V AC/DC	3PLBR6L-024
Blue Lens/Blue LED	48V AC/DC	3PLBR6L-048
Blue Lens/Blue LED	110V AC*	3PLBR6L-110
Blue Lens/Blue LED	230V AC*	3PLBR6L-230



Color	Description	Cat No.
Clear Lens/Yellow LED	12V AC/DC	3PLBR7L-012
Clear Lens/Yellow LED	24V AC/DC	3PLBR7L-024
Clear Lens/Yellow LED	48V AC/DC	3PLBR7L-048
Clear Lens/Yellow LED	110V AC*	3PLBR7L-110
Clear Lens/Yellow LED	230V AC*	3PLBR7L-230



Color	Description	Cat No.
Clear Lens/White LED	12V AC/DC	3PLBR7LS-012
Clear Lens/White LED	24V AC/DC	3PLBR7LS-024
Clear Lens/White LED	48V AC/DC	3PLBR7LS-048
Clear Lens/White LED	110V AC*	3PLBR7LS-110
Clear Lens/White LED	230V AC*	3PLBR7LS-230



Color	Description	Cat No.
Yellow Lens/Yellow LED	12V AC/DC	3PLBR8L-012
Yellow Lens/Yellow LED	24V AC/DC	3PLBR8L-024
Yellow Lens/Yellow LED	48V AC/DC	3PLBR8L-048
Yellow Lens/Yellow LED	110V AC*	3PLBR8L-110
Yellow Lens/Yellow LED	230V AC*	3PLBR8L-230

**110V DC and 230V DC version is available on request.*

Altech Corp.® • 35 Royal Road • Flemington, NJ 08822-6000 • Phone (908)806-9400 • FAX (908)806-9490 • www.altechcorp.com

Unibody LED Indicator Plastic Pilot Lights Specifications

A. Mechanical Characteristics

Applicable Standard	UL508 IEC 60947 CSA 22.2
Degree of Protection	IP65 as per IEC 60947,
Temperature Range	-25° to +70°C (-13 to +158°F)
Contact material	Phosphor bronze for LED, PCB contact brass (tin plated)
Corrosion protection	All metallic parts are electroplated for corrosion protection
Terminal Torque	0.5 Nm (4.5 lbs. / in.)
Viewing Angle	More than 100°
Optical Axial intensity	More than 100 mcd for all colors

B. Electrical Characteristics

Rating	Rated 6V AC/DC to 240V AC and 220V DC, 2W max. (Integral LEDs)
Terminal Capacity	Screw connection 2 X 1.5mm^2 1 X 0.5mm^2 (min) 1 X 2.5mm^2 (max)
Dielectric Test	2.5KV
Rated insulation Resistance	500M ohm at 1000VDC
Polarity protection	Polarity protection is only in case of DC supply lamps
Low voltage protection	20V for 110V AC & 110V DC 40V for 240V AC & 220V DC (i.e. approx. 20% of Rated Voltage)
Current Consumption	Max. 20mA for AC circuits Max. 15mA for DC circuits

Dimensional Drawings

All dimensions shown in millimeters.
To convert to inches multiply by 0.03937

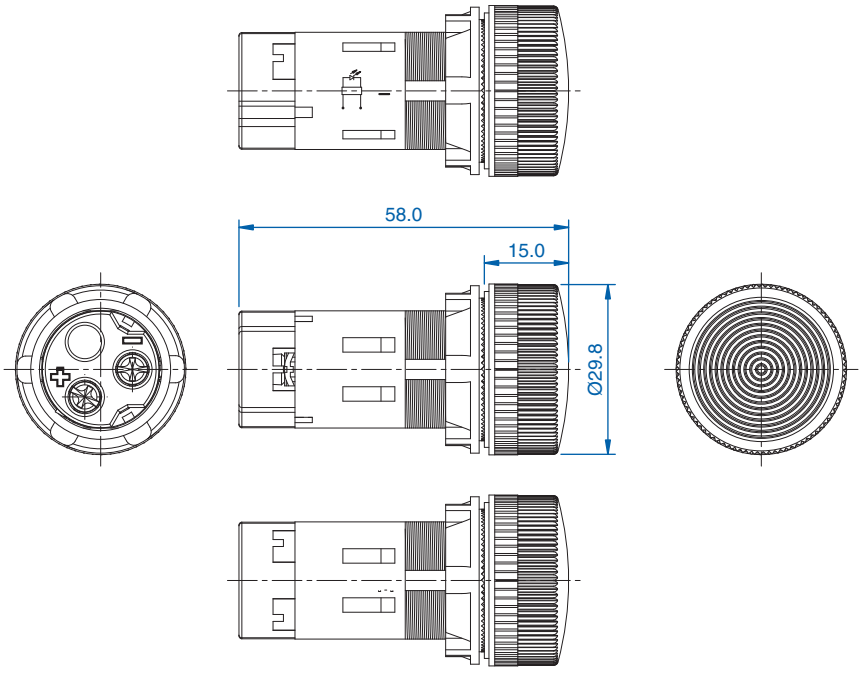

22mm Thermoplastic Enclosures

c UL us
E225660

CE

Certified for
NEMA Type 4X
12 environment.



Base Mount Enclosures

Cat. No.	Operator Capacity	Material	Long Description	Dimensions L x W x H	Cable Entry Knockouts	Mounting Hole Size
4003A11	1	Thermo Plastic	White Top/Black Bottom	73 X 73 X 52	2 x M20	(4) - 4.4x6.4
4003C11	2	Thermo Plastic	White Top/Black Bottom	113 X 73 X 52	2 x M20	(4) - 4.4x6.4
4003E11	3	Thermo Plastic	White Top/Black Bottom	153 X 73X 52	2 x M20	(4) - 4.4x6.4
4003G11	4	Thermo Plastic	White Top/Black Bottom	193 X 73 X 52	2 x M20	(4) - 4.4x6.4
4003S11	5	Thermo Plastic	White Top/Black Bottom	233 X 73 X 52	2 x M20	(4) - 4.4x6.4
4003I11	6	Thermo Plastic	White Top/Black Bottom	273 X 73 X 52	2 x M20	(4) - 4.4x6.4
4004A10	1	Thermo Plastic	Yellow Top/Black Bottom	73 X 73 X 52	2 x M20	(4) - 4.4x6.4
4004C10	2	Thermo Plastic	Yellow Top/Black Bottom	113 X 73 X 52	2 x M20	(4) - 4.4x6.4
4004E10	3	Thermo Plastic	Yellow Top/Black Bottom	153 X 73X 52	2 x M20	(4) - 4.4x6.4
4004G10	4	Thermo Plastic	Yellow Top/Black Bottom	193 X 73 X 52	2 x M20	(4) - 4.4x6.4
4004S10	5	Thermo Plastic	Yellow Top/Black Bottom	233 X 73 X 52	2 x M20	(4) - 4.4x6.4
4004I10	6	Thermo Plastic	Yellow Top/Black Bottom	273 X 73 X 52	2 x M20	(4) - 4.4x6.4

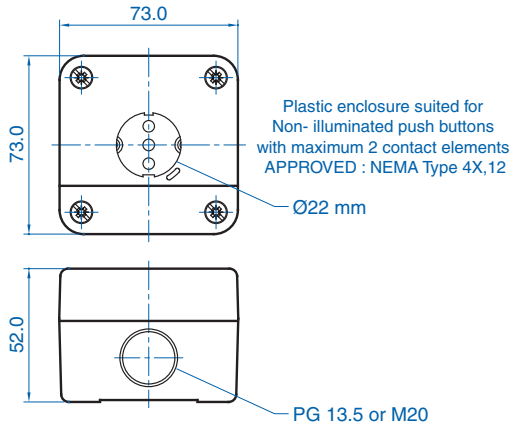

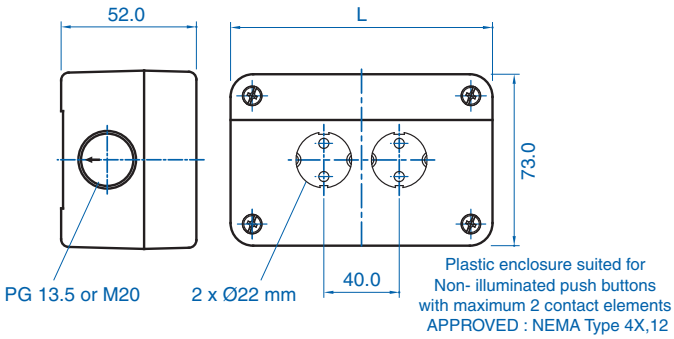

Ambient Temperature: -25°C to 70°C (-13°F to 158°F)

Control Boxes



CE

2PV5X shown

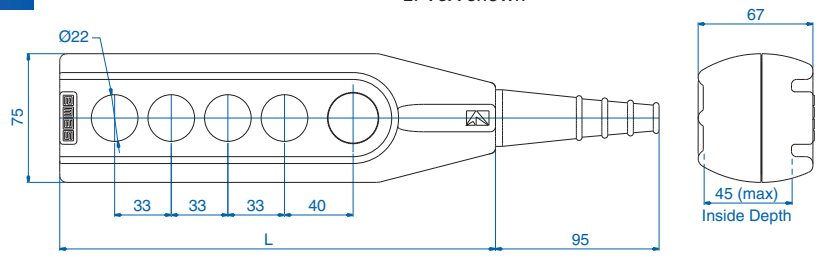

Cat. No.	Operator Capacity	Dimensions* LxWxH mm
2PV2X	2	188x75x67
2PV3X	3	188x75x67
2PV4X	4	221x75x67
2PV5X	5	254x75x67
2PV6X	6	287x75x67
2PV7X	7	320x75x67
2PV8X	8	353x75x67
2PV9X	9	386x75x67

Contact Elements and Seal

Cat. No.	Description
S1	Normally open
S2	Normally closed
3PRG1*	Rubber gasket*

* *To acheive IP65 rating for control boxes, this rubber gasket must be used.*

Altech Corp.® • 35 Royal Road • Flemington, NJ 08822-6000 • Phone (908)806-9400 • FAX (908)806-9490 • www.altechcorp.com

22mm Thermoplastic Enclosure & Control Box Accessories

Certified for **NEMA Type 4X** 12 environment.

E225660

Flush
Momentary
with mounting bracket



Color	Function	Marking	Cat No.
White	Momentary	None	P2AF1
White	Momentary	Black arrow, up/down	P2AF1WA0
White	Momentary	Black arrow, left/right	P2AF1WA90
Black	Momentary	None	P2AF2
Black	Momentary	White arrow, up/down	P2AF2WA0
Black	Momentary	White arrow, left/right	P2AF2WA90
Green	Momentary	None	P2AF3
Red	Momentary	None	P2AF4
Blue	Momentary	None	P2AF6
Yellow	Momentary	None	P2AF8

Mushroom
Momentary/Maintained
with mounting bracket



Red	40mm Momentary	None	P2AM4
Red	40mm Push-Turn	●	P2AML4
Red	30mm Push-Turn	●	P2AMLS4
Red	40mm Push-Pull	◐	P2AMPP4

Projecting
with mounting bracket



Black	Projecting	None	P2AP2
Green	Projecting	None	P2AP3
Red	Projecting	None	P2AP4
Blue	Projecting	None	P2AP6
Yellow	Projecting	None	P2AP8

Selector Switch
with mounting bracket



Black	Maintained / 2 position	None	P2AS2-1*
Black	Maintained / 3 position	None	P2AS2-3*
Black	Momentary / 3 position	None	P2AS2-4*

*Only for 22mm Thermoplastic Enclosures.



Mounting Bracket
for plastic operators
Cat. No. P2BRK



Rotational Washer
for push-turn E-stop plastic operator
Cat. No. 2RLW



Mounting Nut
for plastic operators
Cat. No. P2MN



Large Rubber Gasket
Cat. No. 3PRG1

Note: Used for Push Buttons that begin in a 3P part number. Also used for control boxes with any type of operator in place of small rubber gasket (2PRG1) to acheive a IP65 rating.



Small Rubber Gasket
Cat. No. 2PRG1

Note: Used for Push Buttons that begin in a 2P or P2 part number as a standard gasket.



Transparent Silicone Rubber Boot
for Flush Actuators
Color: Clear
Cat. No. 2BT7 *(for non-illuminated)*
2ALBT7 *(for illuminated)*

Switch Contacts





Panel Mount

Normally Open Silver	**S1**
Normally Closed Silver	**S2**
Normally Open Gold plated	**S3**
Normally Closed Gold plated	**S4**

Base Mount

Normally Open Silver	**S5**
Normally Closed Silver	**S6**
Normally Open Gold plated	**S7**
Normally Closed Gold plated	**S8**

22mm Thermoplastic Enclosure Installation Instructions

Installation

The enclosure may be installed vertically or horizontally.

1. Unscrew the top half of the enclosure. Some enclosures are supplied with detached cover.
2. Place the bottom half to the desired mounting location using two M4 or 8/32" screws.
3. When wiring is complete, install the top half of the enclosure making sure the location key is in it's proper location (see below).

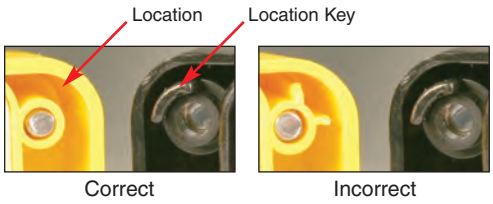

Intended Use

The unit is a two part non-metallic enclosure with a gasket. Metal and/or Plastic series non-illuminated push buttons & pilot lights can be installed in these enclosures. For illuminated push buttons consider the plastic enclosures on pages 34-35 or GDC (gravity die cast) aluminum enclosures on page 37.

Features:

1. Protection type IP65 in accordance with IEC 60947.
2. Protection type 4X, 12 in accordance with UL50.

Preparing for Operation

1. To insert cable, knockout one of the pre-stamped opening.
   For IP65 protection you must use a M20 or PG13 liquid tight strain relief.
2. Install the push button or pilot light in the actuator mounting hole.

Safety Regulations

The unit may only be assembled and installed by individuals who are familiar with the installation instructions and the current regulations for health and safety at work and accident prevention. Ensure local regulations compliances are met.

CAUTION

1. Non-metallic enclosures do not provide grounding connections.
   Use grounding jumper wires.
2. The conduit hubs are to be connected to the conduit before being connected to the enclosure.
3. To maintain the environmental rating of this enclosure, install only UL listed or UL recognized conduit hubs or control devices with the same environmental ratings as the enclosure, in compliance with the installation instructions of the device.

Altech Corp.® • 35 Royal Road • Flemington, NJ 08822-6000 • Phone (908)806-9400 • FAX (908)806-9490 • www.altechcorp.com

22mm Thermoplastic Enclosures Assembly Instructions

Panel Mount Contact Block Installation

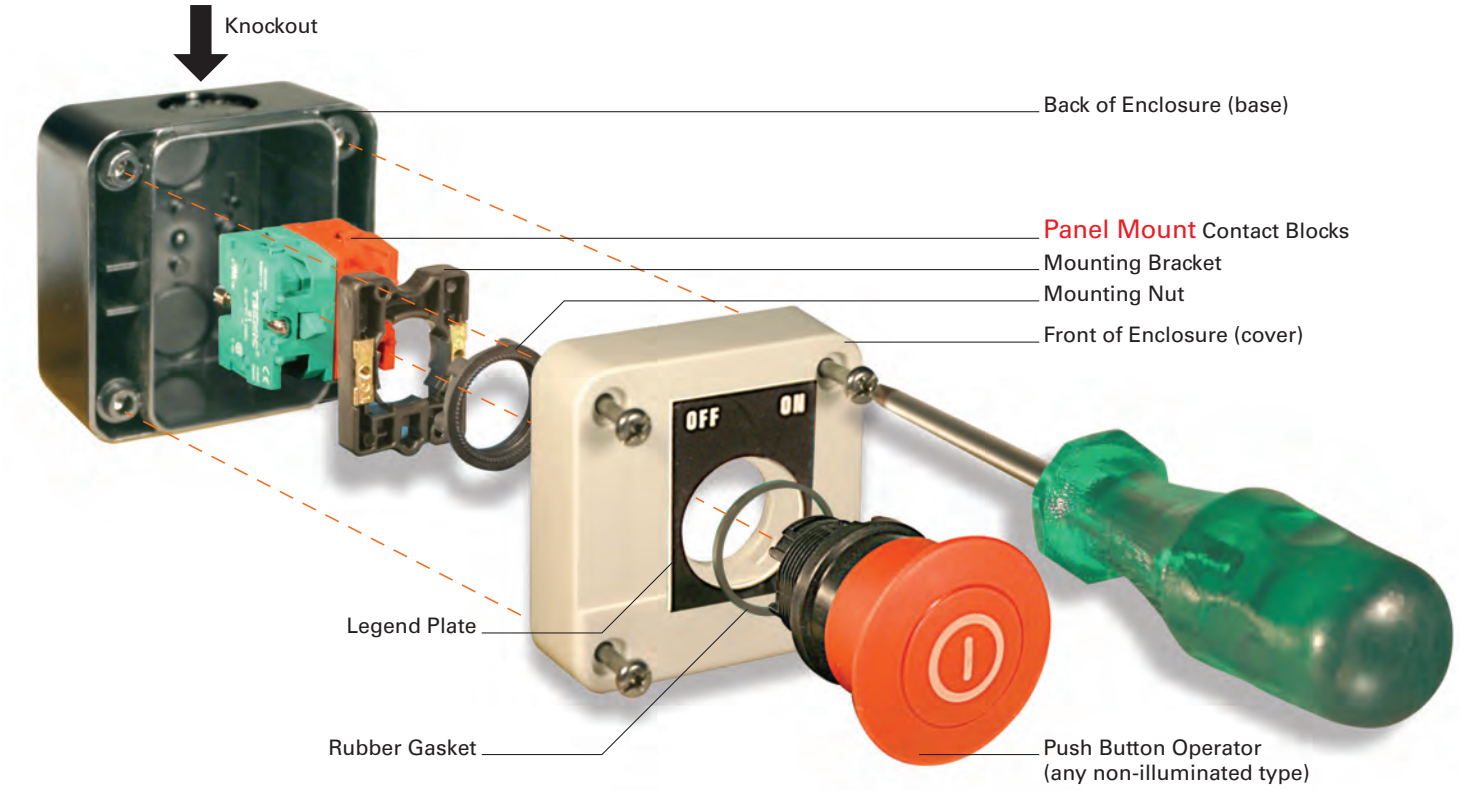

Base Mount Contact Block Installation

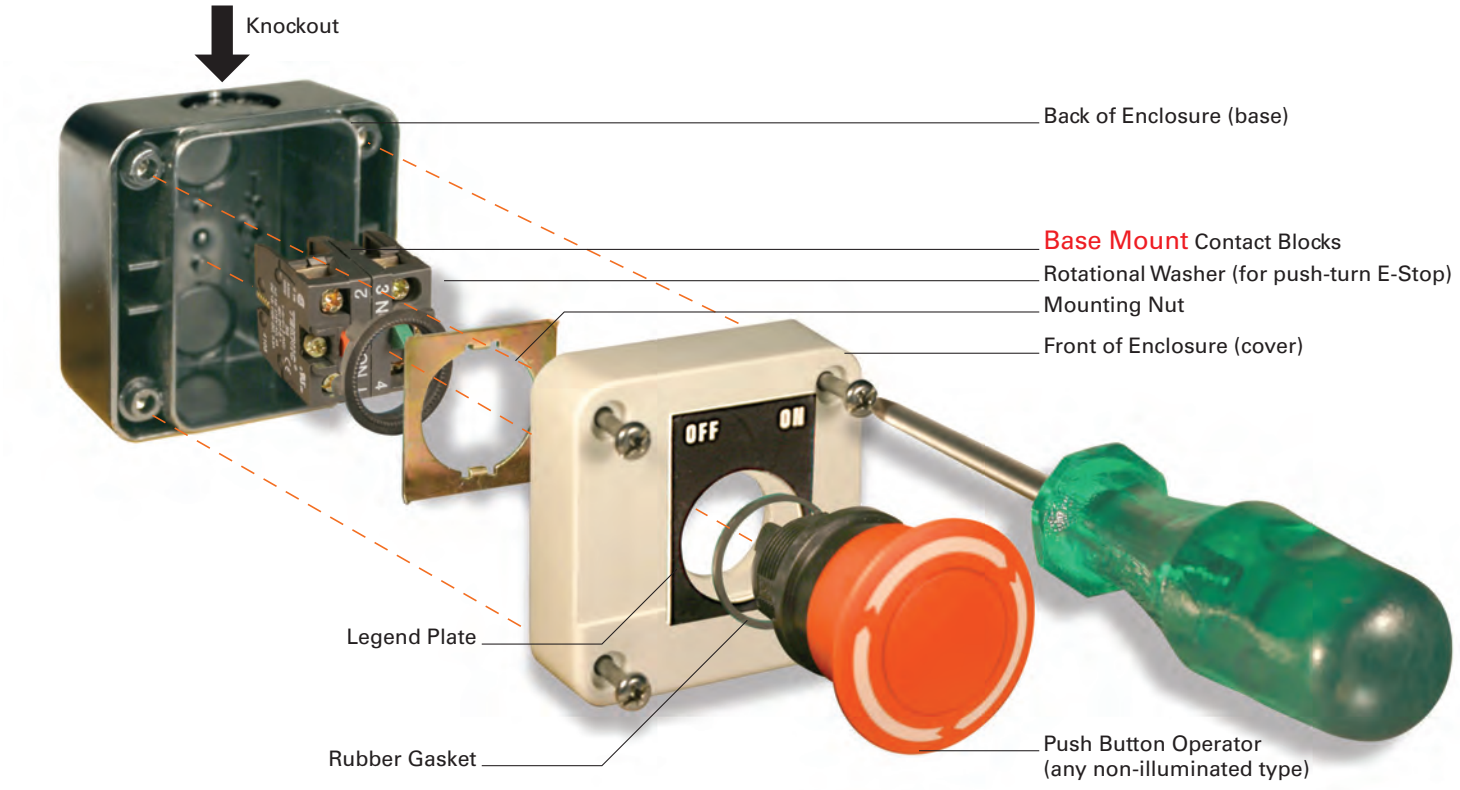

Polycarbonate Enclosures

Standard Features

- Protection Level: IP66* (Nema 4x)
- Technical: M16/20 Knockout Sidewalls
  22.5 mm Diameter Push Button Holes
- Enclosure Material: Polycarbonate
- Temperature Range: -35˚C to 120˚C (-31˚F to 248˚F)
- Gasket Material: Polyurethane
- Color: Light Gray
- Accessories: See section below

**IP66 when suitable installation devices are used.*

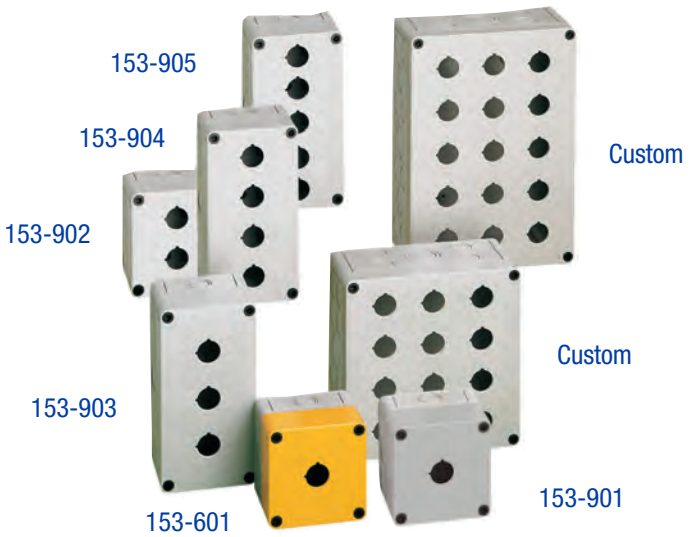

Ordering Information	Cat. No.	Dimensions mm (in) Length	Width	Height	Std. Pk.
One hole enclosure	153-901	94 mm (3.70 in)	94 mm (3.70 in)	81 mm (3.19 in)	1
One hole enclosure (Yellow cover)	153-601	94 mm (3.70 in)	94 mm (3.70 in)	81 mm (3.19 in)	1
Two hole enclosure	153-902	130 mm (5.12 in)	94 mm (3.70 in)	81 mm (3.19 in)	1
Three hole enclosure	153-903	180 mm (7.09 in)	94 mm (3.70 in)	81 mm (3.19 in)	1
Four hole enclosure	153-904	180 mm (7.09 in)	94 mm (3.70 in)	81 mm (3.19 in)	1
Five hole enclosure	153-905	180 mm (7.09 in)	94 mm (3.70 in)	81 mm (3.19 in)	1
One hole enclosure	153-901/L	94 mm (3.70 in)	94 mm (3.70 in)	57 mm (2.24 in)	1
One hole enclosure (Yellow cover)	153-601/L	94 mm (3.70 in)	94 mm (3.70 in)	57 mm (2.24 in)	1
Two hole enclosure	153-902/L	130 mm (5.12 in)	94 mm (3.70 in)	57 mm (2.24 in)	1
Three hole enclosure	153-903/L	180 mm (7.09 in)	94 mm (3.70 in)	57 mm (2.24 in)	1
Four hole enclosure	153-904/L	180 mm (7.09 in)	94 mm (3.70 in)	57 mm (2.24 in)	1
Five hole enclosure	153-905/L	180 mm (7.09 in)	94 mm (3.70 in)	57 mm (2.24 in)	1
One hole enclosure (extra space)	153-902/1H	130 mm (5.12 in)	94 mm (3.70 in)	57 mm (2.24 in)	1
5308 959	M20 Cord Grip, 5-12mm Cable Dia., Lt Gray				1
7211 981	M20 Locknut, Lt. Gray, PA				1
5308 949	M20 Cord Grip, 5-12mm Cable Dia., Black				1
7211 976	M20 Locknut, Black, PA				1

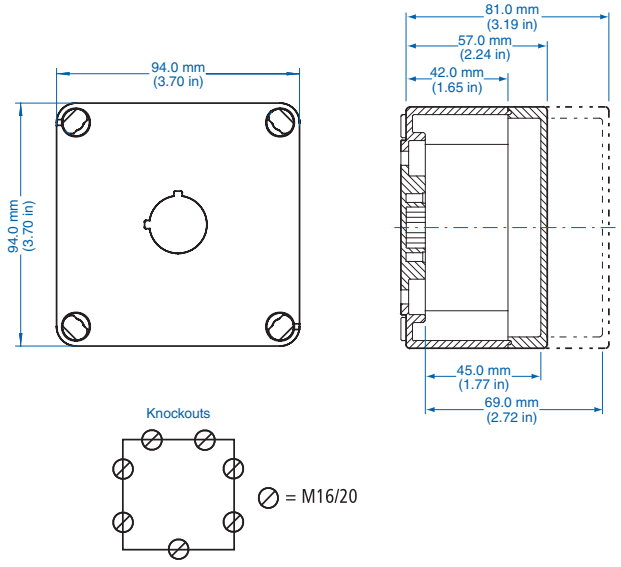

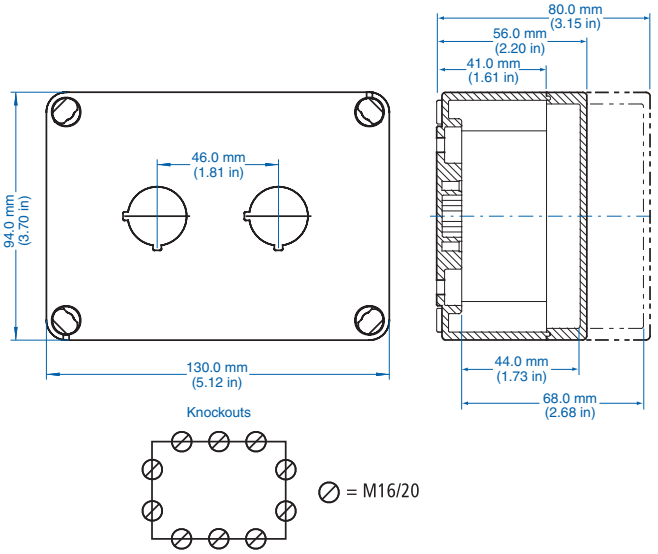

All dimensions shown in millimeters.
To convert to inches multiply by 0.03937

Altech Corp.® • 35 Royal Road • Flemington, NJ 08822-6000 • Phone (908)806-9400 • FAX (908)806-9490 • www.altechcorp.com

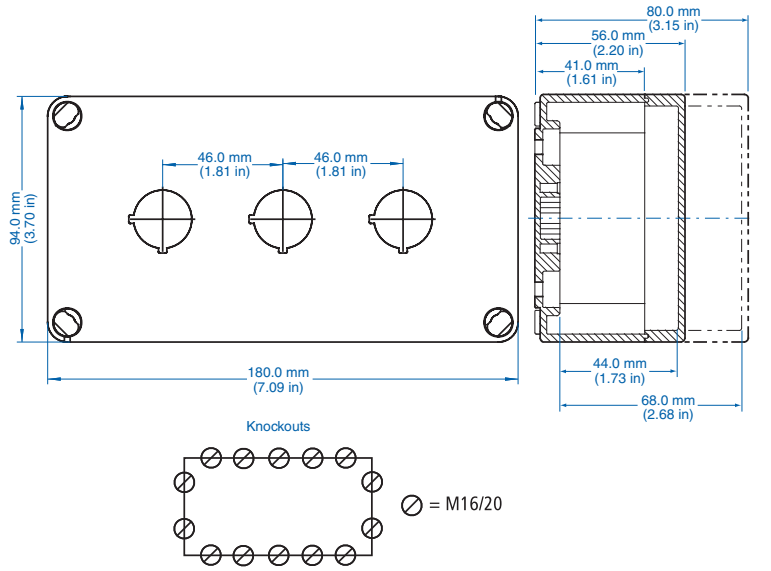

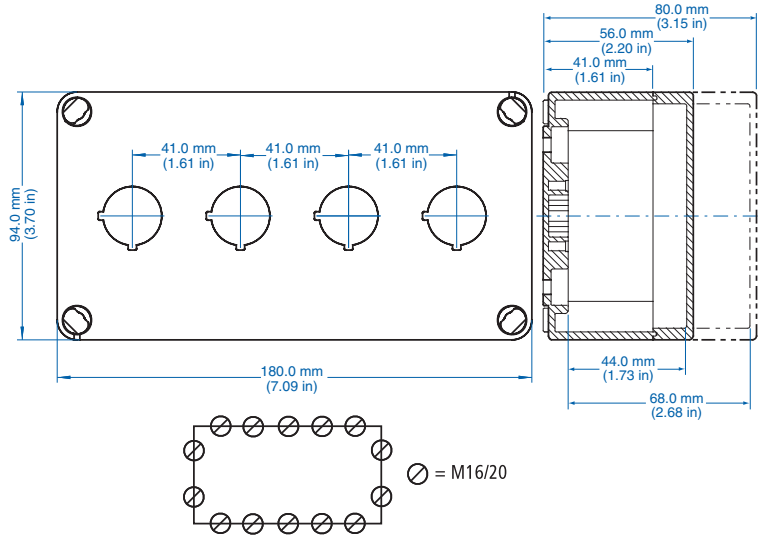

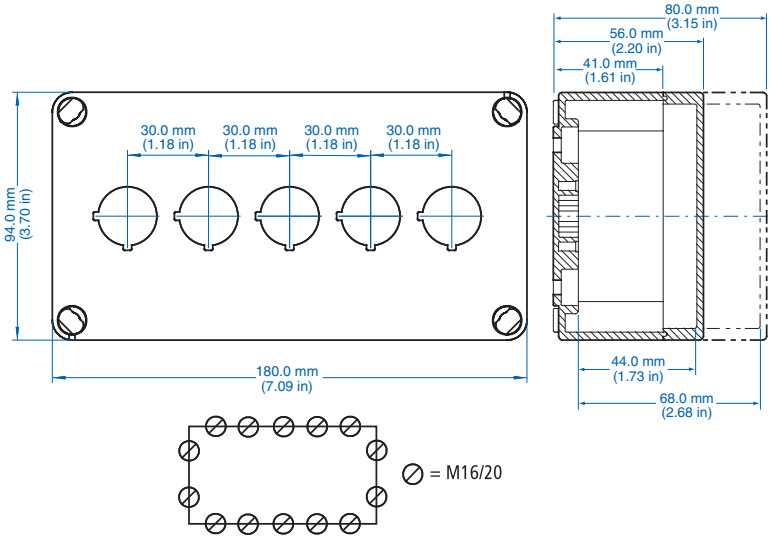

All dimensions shown in millimeters.
To convert to inches multiply by 0.03937

Aluminum Enclosures for 22mm Operators

c UL us
E225660

CE

Certified for
NEMA Type 4X
12 environment.



Aluminum (52mm Height) Pressure Die Cast

For base mount contact blocks and non-illuminated operators. 2 contact blocks maximum per operator.

Operator Capacity	Cat. No. Black base/ Grey Cover*	Color Black base/ Yellow Cover	Material Construction	Dimensions LxWxH mm (in.)	Cable Entry Thread Size	Mounting Hole Dia.
1	2005A13	2048A10	PDC Aluminum	80x90x52 (3.15x3.54x2.05)	2xM20	4 x 6mm
2	2006C13	2050C10	PDC Aluminum	80x135x52 (3.15x5.32x2.05)	2xM20	4 x 6mm
3	2007E13	2032E10	PDC Aluminum	80x180x52 (3.15x7.09x2.05)	2xM20	4 x 6mm
4	2010G13	2020G10	PDC Aluminum	80x225x52 (3.15x8.86x2.05)	2xM20	4 x 6mm
1	2015A13	2049A10	PDC Aluminum	80 x 90x52 (3.15x3.54x2.05)	2x1/2"-14 NPT	4 x 6mm
2	2014C13	2051C10	PDC Aluminum	80x135x52 (3.15x5.32x2.05)	2x1/2"-14 NPT	4 x 6mm
3	2012E13	2033E10	PDC Aluminum	80x180x52 (3.15x7.09x2.05)	2x1/2"-14 NPT	4 x 6mm
4	2008G13	2019G10	PDC Aluminum	80x225x52 (3.15x8.86x2.05)	2x1/2"-14 NPT	4 x 6mm

*Color code RAL 7032, Pebble Gray. Other colors available upon request.

1 - Operator Capacity

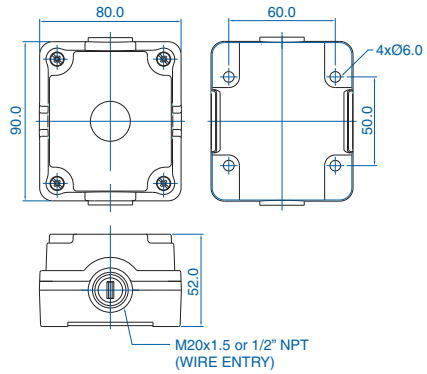

2 - Operator Capacity

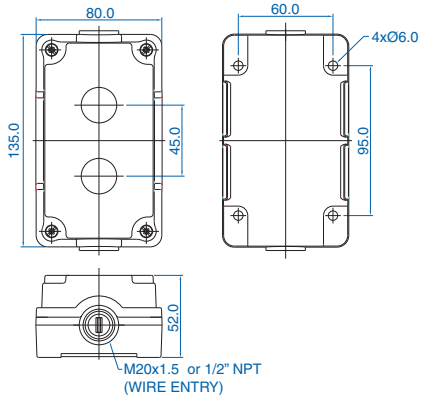

3 - Operator Capacity

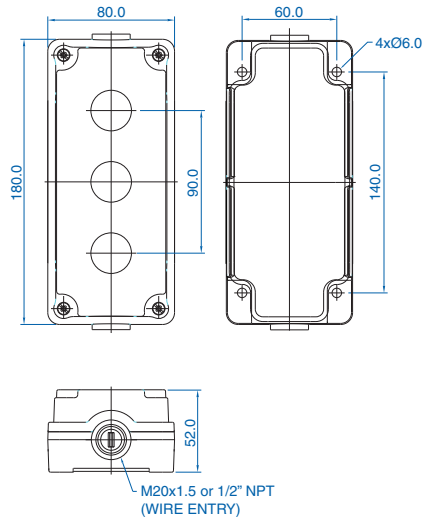

4 - Operator Capacity

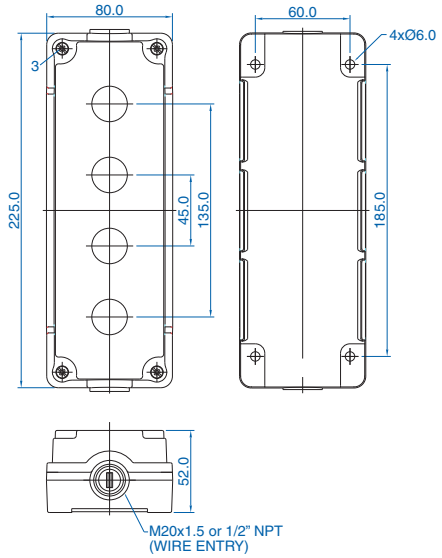

All dimensions shown in millimeters. To convert to inches multiply by 0.03937

Altech Corp.® • 35 Royal Road • Flemington, NJ 08822-6000 • Phone (908)806-9400 • FAX (908)806-9490 • www.altechcorp.com

Aluminum Enclosures for 22mm Operators

c UL us
E225660

CE

Certified for
NEMA Type 4X
12 environment.



Aluminum (72mm Height) Pressure Die Cast

For panel mount contact blocks and illuminated operators. 2 contact blocks can be used with an illuminated operator. 4 contact blocks can be used with any non-illuminated operator.

Operator Capacity	Cat. No. Black base/ Grey cover*	Color Black base/ Grey cover*	Material Construction	Dimensions LxWxH mm (in.)	Cable Entry Thread Size	Mounting Hole Dia.
1	7009A13	7021A10	PDC Aluminum, EH	80x90x72 (3.15x3.54x2.83)	2xM20	4 X 6mm
2	7006C13	7015C10	PDC Aluminum, EH	80x135x72 (3.15x5.32x2.83)	2xM20	4 X 6mm
3	7004E13	7016E10	PDC Aluminum, EH	80x180x72 (3.15x7.09x2.83)	2xM20	4 X 6mm
4	7004G13	7008G10	PDC Aluminum, EH	80x225x72 (3.15x8.86x2.83)	2xM20	4 X 6mm
1	7010A13	7022A10	PDC Aluminum, EH	80x90x72 (3.15x3.54x2.83)	2x1/2"-14 NPT	4 X 6mm
2	7007C13	7016C10	PDC Aluminum, EH	80x135x72 (3.15x5.32x2.83)	2x1/2"-14 NPT	4 X 6mm
3	7005E13	7017E10	PDC Aluminum, EH	80x180x72 (3.15x7.09x2.83)	2x1/2"-14 NPT	4 X 6mm
4	7005G13	7009G10	PDC Aluminum, EH	80x225x72 (3.15x8.86x2.83)	2x1/2"-14 NPT	4 X 6mm

*Color code RAL 7032, Pebble Gray. Other colors available upon request.

1 - Operator Capacity

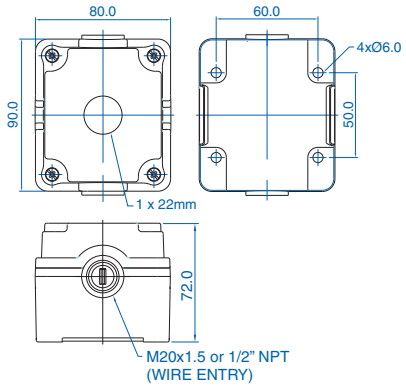

2 - Operator Capacity

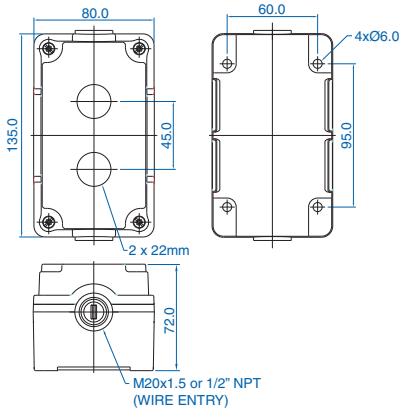

3 - Operator Capacity

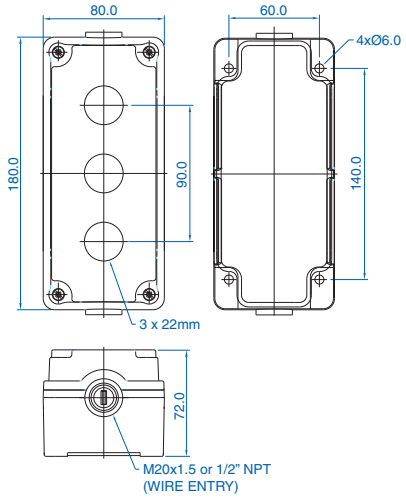

4 - Operator Capacity

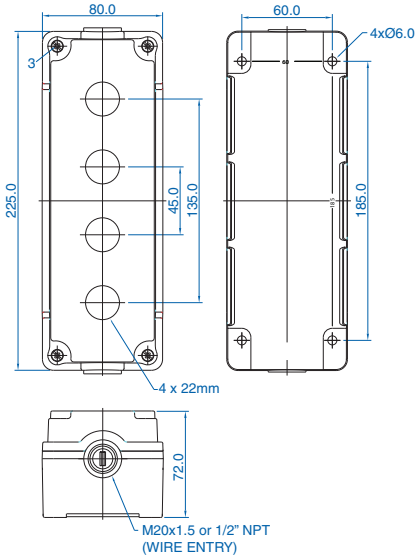

All dimensions shown in millimeters. To convert to inches multiply by 0.03937

22mm Push Button Accessories



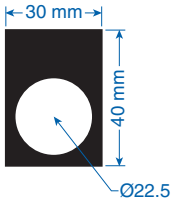

Metal legend plates are engraved on both sides, one side in horizontal and the other side in a vertical orientation.



EMERGENCY STOP
LP41 / 2LP41 (only)
Legend plate Ø 60mm yellow with black text.
Not to be used with thermoplastic enclosures.

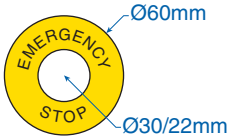

Please visit altechcorp.com/pb for other available legend plates.

English

Title	Cat No.
AUTO	2LP09
AUTO HAND	2LP32
AUTO - MAN	2LP43
B PHASE	2LP27
Blank Aluminum	2LP40
BOTTOM HEAT	2LP101
CLEAR	2LP51
CLOSE	2LP08
CLUTCH ON/OFF	2LP73
Cycle Stop	2LP55
DOWN	2LP06
EMERGENCY STOP	2LP41
Emergency Stop (black)	2LP56
Emergency Stop (red)	2LP66
FAST	2LP12
FAULT	2LP107
FILM FEED	2LP105
FOR-OFF-REV	2LP42
FORWARD	2LP03
FWD - REV	2LP47
HAND	2LP10
HAND O AUTO	2LP36
HOLD	2LP50
I II	2LP34
I O II	2LP39
INCH	2LP14
INFEED	2LP72
INFEED ON/OFF	2LP71
JOG	2LP69
JOG - RUN	2LP45
KNIFE CYCLE	2LP106
LEFT	2LP18
LOCAL	2LP21
LOCAL REMOTE	2LP33
MAN O AUTO	2LP36
O I	2LP35
OFF	2LP16

Title	Cat No.
OFF - ON	2LP46
ON	2LP15
ON OFF	2LP30
OPEN	2LP07
OVER	2LP74
OXY - ATM - AUTO	2LP58
OXY - AUTO - ATM	2LP57
POSITION , A B	2LP48
POWER ON	2LP20
PUSHER CYCLE	2LP104
R PHASE	2LP25
RAISE - LOWER	2LP44
READY	2LP49
REMOTE	2LP22
RESET	2LP13
RESET/MANUAL/AUTO	2LP103
REV FWD	2LP31
REV - OFF - FWD	2LP59
REVERSE	2LP04
RIGHT	2LP17
RUN	2LP24
SHEAR	2LP70
SIDE HEAT	2LP102
SLOW	2LP11
SLOW OFF FAST	2LP37
START	2LP01
START STOP	2LP28
STOP (red)	2LP02
TEST	2LP23
TRIP	2LP19
UNDERLOAD	2LP108
UP	2LP05
UP DOWN	2LP29
UP OFF DOWN	2LP38
Y PHASE	2LP26
Temporary for Custom Imprint	2LPXX

Spanish

Title	Cat No.
ABAJO	2LP06SP
ABRIR	2LP07SP
ADELANTE	2LP03SP
ADELANTE ATRAS	2LP31SP
ARRANQUE	2LP01SP
ARRANQUE PARO	2LP28SP
ARRIBA	2LP05SP
ARRIBA ABAJO	2LP29SP
ARRIBA FUERA ABAJO	2LP38SP
ATRAS	2LP04SP
AUTO MAN	2LP32SP
CERRAR	2LP08SP
DENTRO	2LP15SP
DERECHO	2LP17SP

Title	Cat No.
ENCENDIDO	2LP20SP
ENCENDIDO APAGADO	2LP30SP
FALLA	2LP19SP
FUERA	2LP16SP
IZQUIERDA	2LP18SP
LENTO	2LP14SP
LENTO FUERA RAPIDO	2LP37SP
LOCAL REMOTO	2LP33SP
MAN O AUTO	2LP36SP
MANUAL	2LP10SP
PARO	2LP02SP
PARO DE EMERGENCIA	2LP41SP
RAPIDO	2LP12SP
REARME	2LP13SP

22mm Push Button Accessories





Replacement Lens for Illuminated Mushroom Operators

Color	Cat No.
White	2ALM1L
Green	2ALM3L
Red	2ALM4L
Amber	2ALM5L
Blue	2ALM6L
Clear	2ALM7L
Yellow	2ALM8L

Boots for Booted Actuators

Color	Cat No.
White	2BT1
Black	2BT2
Green	2BT3
Red	2BT4
Blue	2BT6
Clear	2BT7
Yellow	2BT8

Lenses for Pilot Lights with LED

Color	Cat No.
White	2PLL1L
Green	2PLL3L
Red	2PLL4L
Amber	2PLL5L
Blue	2PLL6L
Clear	2PLL7L
Yellow	2PLL8L

Lenses for Pilot Lights with Filament Bulb

Color	Cat No.
White	2PLL1
Green	2PLL3
Red	2PLL4
Amber	2PLL5
Blue	2PLL6
Clear	2PLL7
Yellow	2PLL8

Lenses for Illuminated Actuators with LED (flush/projecting)

Color	Cat No.
White	2LAL1L
Green	2LAL3L
Red	2LAL4L
Amber	2LAL5L
Blue	2LAL6L
Clear	2LAL7L
Yellow	2LAL8L

Lenses for Illuminated Actuators with Filament Bulb

Color	Cat No.
White	2LAL1
Green	2LAL3
Red	2LAL4
Amber	2LAL5
Blue	2LAL6
Clear	2LAL7
Yellow	2LAL8

Replacement Bulbs



Filament Bulbs

Color	Voltage	Cat No.
Clear	12V AC/DC	BA9S12
Clear	24V AC/DC	BA9S24
Clear	48V AC/DC	BA9S48
Clear	110V AC/DC	BA9S110
Clear	230V AC/DC	BA9S220

LED Bulbs

Color	Voltage	Cat No.
12V AC/DC		
White	12V AC/DC	MCB9112
Green	12V AC/DC	MCB9312
Red	12V AC/DC	MCB9412
Amber	12V AC/DC	MCB9512
Blue	12V AC/DC	MCB9612
Yellow	12V AC/DC	MCB9812

LED Bulbs

Color	Voltage	Cat No.
110V AC		
White	110V AC	MCB91110
Green	110V AC	MCB93110
Red	110V AC	MCB94110
Amber	110V AC	MCB95110
Blue	110V AC	MCB96110
Yellow	110V AC	MCB98110
110V DC		
White	110V DC	MCB91110D
Green	110V DC	MCB93110D
Red	110V DC	MCB94110D
Amber	110V DC	MCB95110D
Blue	110V DC	MCB96110D
Yellow	110V DC	MCB98110D
24V AC/DC		
White	24V AC/DC	MCB9124
Green	24V AC/DC	MCB9324
Red	24V AC/DC	MCB9424
Amber	24V AC/DC	MCB9524
Blue	24V AC/DC	MCB9624
Yellow	24V AC/DC	MCB9824

Color	Voltage	Cat No.
230V AC		
White	230V AC	MCB91230
Green	230V AC	MCB93230
Red	230V AC	MCB94230
Amber	230V AC	MCB95230
Blue	230V AC	MCB96230
Yellow	230V AC	MCB98230
230V DC		
White	230V DC	MCB91230D
Green	230V DC	MCB93230D
Red	230V DC	MCB94230D
Amber	230V DC	MCB95230D
Blue	230V DC	MCB96230D
Yellow	230V DC	MCB98230D
48V AC/DC		
White	48V AC/DC	MCB9148
Green	48V AC/DC	MCB9348
Red	48V AC/DC	MCB9448
Amber	48V AC/DC	MCB9548
Blue	48V AC/DC	MCB9648
Yellow	48V AC/DC	MCB9848

Maximum Power Consumption:

Supply Voltage	LED		FILAMENT BULBS	
	Power (max) in Watts	Current	Power (max) in Watts	Current
12V	0.5W	max 20mA	2W	max 166mA
24V	0.5W	max 20mA	2W	max 85mA
48V	0.5W	max 20mA	2W	max 45mA
110V	0.5W	max 15mA	2.6W	max 20mA
240V	1W	max 10mA	2.6W	max 20mA

These bulbs are available in various colors and Voltages. A filament bulb can be directly replaced with these LED based bulbs without having to change any other expensive part of your existing lamps.

These bulbs use high brightness LED chips which last for more than 100,000 hours and consume very little power. Heat generated by LED based bulbs is negligible hence no damage to the body of the lamp or any operator in case of Illuminated push buttons.

These bulbs can be used to replace 12V AC/DC, 24V AC/DC, 48V AC/DC, 110V AC or DC and 240V AC or DC circuits directly. LED color indication is given on the bulb for easy identification.

Conforming Standards: UL508, CSA 22.2, IEC 60947-5-1

22mm Push Button Accessories



Push Push mechanism for converting spring return actuator into maintained
Cat. No. 2PPM



Transparent Silicone Rubber Boot for Flush Actuators
Color: Clear
Cat. No. 2BT7 *(for non-illuminated)*
2ALBT7 *(for illuminated)*



Adapter for installing a Ø22.5 device in Ø 30.5 cutout
Cat. No. 2ADP (with washer)
ADW (washer only)



Rubber Boot for Twin Actuators
Color: Clear
Cat. No. 2ATBT7 (Non-Illuminated)
2ATLBT7 (illuminated)



Mounting Bracket
Cat. No. 2BRK
Cat. No. 2BRKT (*Thin Bracket for Base Mount Enclosures*)



Blanking plug for 22.5 mm holes
Color: Black
Cat. No. 2BP2

Blanking plug for M20 (20mm) or NPT 1/2" holes
Color: Gray
Cat. No. M20
Cat. No. NPT1/2



Padlock
For mushroom actuator: Cat. No. 2PAM
For projecting actuator: Cat. No. 2PAP



Bulb Extractor
Cat. No. 2BA9SE



E-Stop Shroud
Plastic protector: Cat. No. 2ESS1
Plastic protector (UL): Cat. No. 2ESS1-UL



Bulb Holder for Illuminated Push Buttons
Cat. No. 2LHB



Plastic Cover
Cat. No. 2PAM7



Rubber Gasket
Cat. No. 2PRG1



Replacement Keys
For all 22mm operators wth keys Cat. No. 2KY455



Rubber Boot for Contact Elements
Cat. No. 2SEBT2

Altech Corp.® • 35 Royal Road • Flemington, NJ 08822-6000 • Phone (908)806-9400 • FAX (908)806-9490 • www.altechcorp.com

22mm Push Button Switch Contacts

Panel Mount Types



S1
Normally
Open
Silver



S2
Normally
Closed
Silver



S3
Normally
Open
Gold plated



S4
Normally
Closed
Gold plated

Mounting Examples:

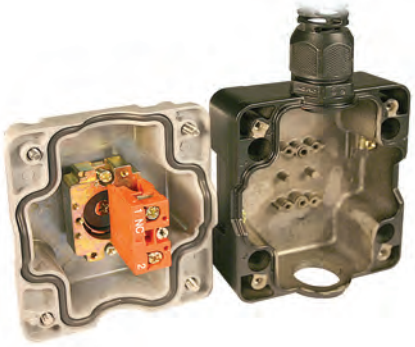

Cast Aluminum Enclosure
with panel mount contacts
and metal operator



Plastic Enclosure
with panel mount contacts
and plastic operator

Base Mount Types



S5*
Normally
Open
Silver



S6*
Normally
Closed
Silver



S7*
Normally
Open
Gold plated



S8*
Normally
Closed
Gold plated

Mounting Examples:

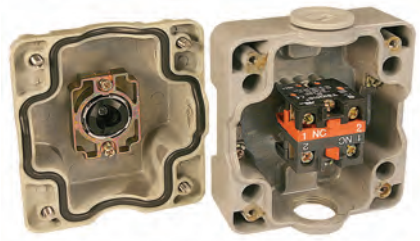

Cast Aluminum Enclosure
with base mount contacts
and metal operator



Plastic Enclosure
with base mount contacts
and metal operator



Plastic Enclosure
with base mount contacts
and plastic operator

** For use with non-illuminated operators in thermoplastic or aluminum enclosures listed on page 30 and 36.*

Pre-assembled or Ready to Assemble Control Stations



Solutions for your applications

Backed by technical and industrial experience, we offer preassembled ready to install or assembled to order control stations. Altech offers several ranges of control stations. From a cost effective plastic enclosure assembled with 22 mm push buttons to a heavy duty cast aluminum enclosure assembled with 22 or 30mm push buttons, you will find the one that fits your application.



Sample Part No. 44.2R.-156





High performance and Extensive range

Our basic plastic or Pressure Die Cast aluminum (PDC) enclosures are available with contact blocks mounted on the bracket behind the 22 mm operator or in the rear (base) of the enclosure (*see page 41*). Altech can assemble the control station to the customer specifications or it can be ordered unassembled. These enclosures are easy to assemble by using any Non-Illuminated operator with a maximum of 2 contacts per operator.

Our plastic enclosures on pages 34-35 can be customized to meet the customer's most demanding applications. These enclosures can be equipped with any 22 mm illuminated or Non-Illuminated operators. Use up to 2 contact blocks with the illuminated operators or up to 4 contact blocks with the Non-illuminated operators.



Our Gravity Die Cast aluminum (GDC) enclosures have an excellent resistance to mechanical shock and vibration. They can be equipped with any illuminated or Non-Illuminated operators. Use up to 2 contact blocks with the illuminated 22mm operators or up to 4 contact blocks with the Non-illuminated 22mm operators. This enclosure can be modified to accept any Non-illuminated 30mm operator or pilot light as well.

Altech Corp.® • 35 Royal Road • Flemington, NJ 08822-6000 • Phone (908)806-9400 • FAX (908)806-9490 • www.altechcorp.com

Pre-assembled or Ready to Assemble Control Stations



Application specific solutions

These products are suitable for a wide variety of applications. They have an excellent resistance to corrosion and cleaning agents. They are tolerant of high pressure cleaning without leakage. These enclosures combined with our push buttons offer an excellent price/performance ratio.

Our staff has the ability to take your requirements and rapidly turn them into a solution. We use the latest CAD system in our process. Prototypes are available for most application specific requirements.



Sample Part No. 44-200T



Safety and reliability

The majority of the enclosures meet all industrial application requirements from the most common to the most extreme.

They have international certifications such as UL, CE, etc. They conform to IEC standards, have a IP65 rating and NEMA Type 4X protection.



Metal legend plates are engraved on both sides, one side in horizontal and the other side in a vertical orientation.

Save Time

Our control stations save you time, simplify and speed up your installation while maintaining the high quality and appearance of your equipment.

Mounting is easy, the only tool you need is a screwdriver.

30mm Metal Push Buttons

The Altech 30mm Push Button line include a complete selection of push buttons, pilot lights and selector switches and accessories. All properly assembled devices are UL and CE Recognized and they certified for NEMA type 4X applications. An internal seal provides watertight integrity and all components are corrosion resistant materials.

Our contact blocks are color coded for an easy assembly and identification (Red=S11, Yellow=S12). Illuminated or Non-Illuminated push buttons in various colors are available for quick delivery.

Selector Switches are available in a 2 or 3 position styles with and option for momentary or maintained function. The pilot lights are full voltage and LED and filament bubs are interchangeable.

Cast aluminum control stations are available to your specifications.

These Ø 30 control devices can be mounted in any position in panels of 1 to 6 mm (.039 - .236 in.) thickness.

30mm Non-Illuminated Metal Operators

c UL us
E225660

CE

Certified for
NEMA Type 4X
12 environment.

Flush Non-Illuminated Momentary

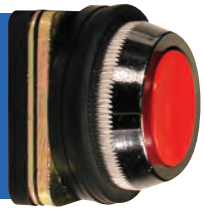

Color	Function	Cat No.
White	Momentary	AF1
Black	Momentary	AF2
Green	Momentary	AF3
Red	Momentary	AF4
Blue	Momentary	AF6
Yelllow	Momentary	AF8

Booted Momentary



Color	Function	Cat No.
White	Momentary	AB1
Black	Momentary	AB2
Green	Momentary	AB3
Red	Momentary	AB4
Blue	Momentary	AB6
Yelllow	Momentary	AB8

Projecting Momentary



Color	Function	Cat No.
White	Momentary	AP1
Black	Momentary	AP2
Green	Momentary	AP3
Red	Momentary	AP4
Blue	Momentary	AP6
Yelllow	Momentary	AP8

Altech Corp.® • 35 Royal Road • Flemington, NJ 08822-6000 • Phone (908)806-9400 • FAX (908)806-9490 • www.altechcorp.com

Dimensional Drawings

All dimensions shown in millimeters.
To convert to inches multiply by 0.03937

Flush Momentary

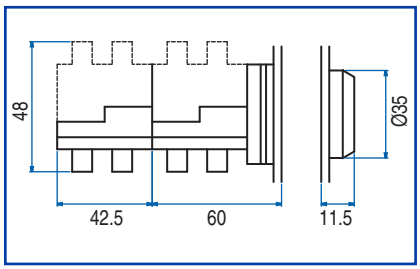

Booted Momentary

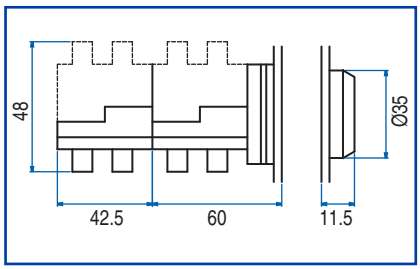

Projecting Momentary

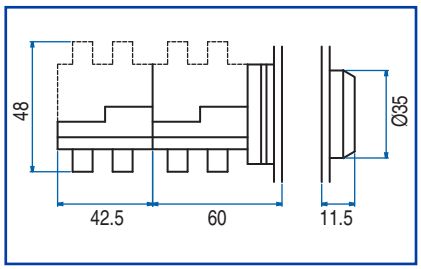

Contact Elements

Description	Cat. No.
1 Normally Open + 1 Normally Closed Silver Contacts	S11
2 Normally Open + 2 Normally Closed Silver Contacts	S11 + S12
For additional contacts, see diagram at right.	



Contact Installation Screws

Type	Dimensions	Used with
SC25	M4 x 25 mm	S11
SC45	M4 x 45 mm	S11 + S12
SC65	M4 x 65 mm	2x S11 + S12
SC90	M4 x 90 mm	2x S11 + 2x S12

** When using more than two contact blocks, additonal screws must be purchased separately (SC65 and SC90).*

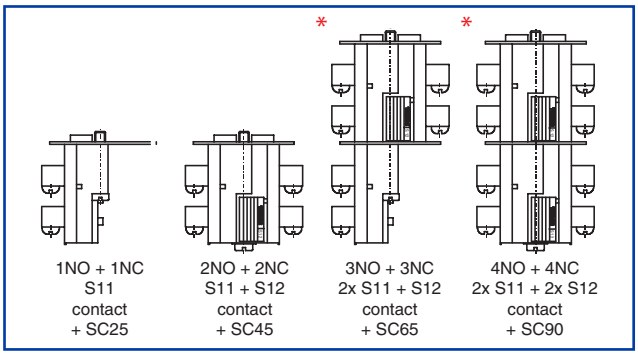

Exploded Assembly View

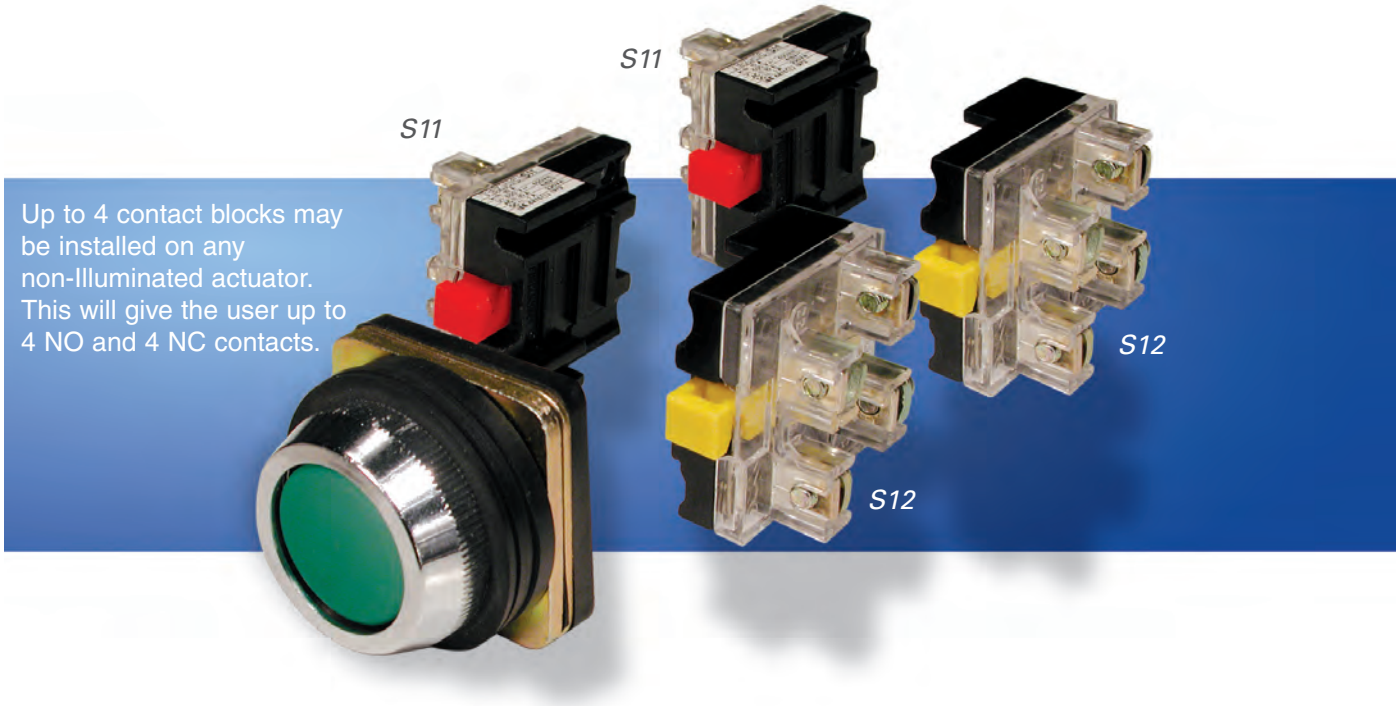

Up to 4 contact blocks may be installed on any non-Illuminated actuator. This will give the user up to 4 NO and 4 NC contacts.

30mm Illuminated Metal Operators

c UL us
E225660

CE

Certified for
NEMA Type 4X
12 environment.

Flush Illuminated Momentary

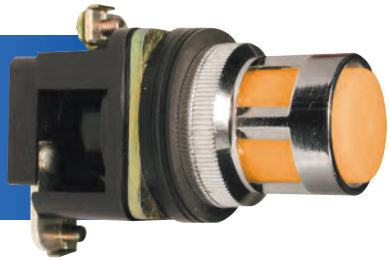

Note:
All LED illuminated actuators and pilot lights at a specified voltage will operate on AC and DC. Except for 110V and 230V specify AC or DC type.



Replacement bulbs available.
See page 54.

Color	Voltage	Cat No.
24V AC/DC *(filament bulb)*		
White	24V AC/DC	ALF1-024
Green	24V AC/DC	ALF3-024
Red	24V AC/DC	ALF4-024
Amber	24V AC/DC	ALF5-024
Blue	24V AC/DC	ALF6-024
Clear	24V AC/DC	ALF7-024
Yelllow	24V AC/DC	ALF8-024
48V AC/DC *(filament bulb)*		
White	48V AC/DC	ALF1-048
Green	48V AC/DC	ALF3-048
Red	48V AC/DC	ALF4-048
Amber	48V AC/DC	ALF5-048
Blue	48V AC/DC	ALF6-048
Clear	48V AC/DC	ALF7-048
Yelllow	48V AC/DC	ALF8-048
110V AC/DC *(filament bulb)*		
White	110V AC/DC	ALF1-110
Green	110V AC/DC	ALF3-110
Red	110V AC/DC	ALF4-110
Amber	110V AC/DC	ALF5-110
Blue	110V AC/DC	ALF6-110
Clear	110V AC/DC	ALF7-110
Yelllow	110V AC/DC	ALF8-110
230V AC *(filament bulb)*		
White	230V AC	ALF1-230
Green	230V AC	ALF3-230
Red	230V AC	ALF4-230
Amber	230V AC	ALF5-230
Blue	230V AC	ALF6-230
Clear	230V AC	ALF7-230
Yelllow	230V AC	ALF8-230

230V DC version is available on request.

24V AC/DC *(LED bulb)*		
White	24V AC/DC	ALF1LB-024
Green	24V AC/DC	ALF3LB-024
Red	24V AC/DC	ALF4LB-024
Amber	24V AC/DC	ALF5LB-024
Blue	24V AC/DC	ALF6LB-024
Clear	24V AC/DC	ALF7LB-024
Yelllow	24V AC/DC	ALF8LB-024
48V AC/DC *(LED bulb)*		
White	48V AC/DC	ALF1LB-048
Green	48V AC/DC	ALF3LB-048
Red	48V AC/DC	ALF4LB-048
Amber	48V AC/DC	ALF5LB-048
Blue	48V AC/DC	ALF6LB-048
Clear	48V AC/DC	ALF7LB-048
Yelllow	48V AC/DC	ALF8LB-048
110V AC/DC *(LED bulb)*		
White	110V AC	ALF1LB-110
Green	110V AC	ALF3LB-110
Red	110V AC	ALF4LB-110
Amber	110V AC	ALF5LB-110
Blue	110V AC	ALF6LB-110
Clear	110V AC	ALF7LB-110
Yelllow	110V AC	ALF8LB-110
230V AC* *(LED bulb)*		
White	230V AC*	ALF1LB-230
Green	230V AC*	ALF3LB-230
Red	230V AC*	ALF4LB-230
Amber	230V AC*	ALF5LB-230
Blue	230V AC*	ALF6LB-230
Clear	230V AC*	ALF7LB-230
Yelllow	230V AC*	ALF8LB-230

**230V DC version is available on request.*

Altech Corp.® • 35 Royal Road • Flemington, NJ 08822-6000 • Phone (908)806-9400 • FAX (908)806-9490 • www.altechcorp.com

Dimensional Drawings

All dimensions shown in millimeters.
To convert to inches multiply by 0.03937

Flush Illuminated Momentary

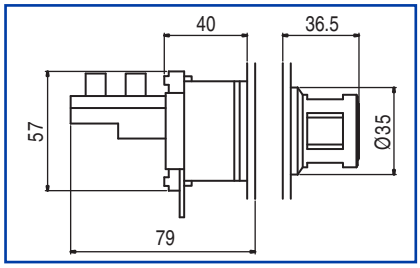

Contact Elements

Description	Cat. No.
1 Normally Open + 1 Normally Closed Silver Contacts	S11
2 Normally Open + 2 Normally Closed Silver Contacts	S11 + S12
For additional contacts, see diagram at right.	

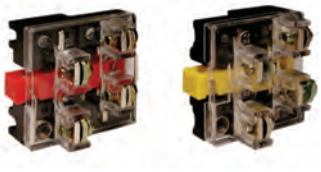

Contact Installation Screws

Type	Dimensions	Used with
SC25	M4 x 25 mm	S11
SC45	M4 x 45 mm	S11 + S12
SC65	M4 x 65 mm	2x S11 + S12
SC90	M4 x 90 mm	2x S11 + 2x S12

** When using more than two contact blocks, additonal screws must be purchased separately (SC65 and SC90).*

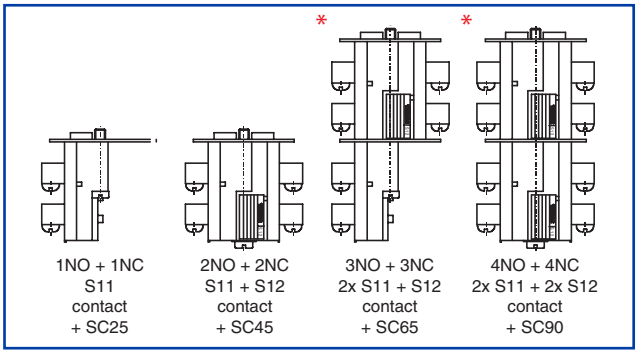

Exploded Assembly View

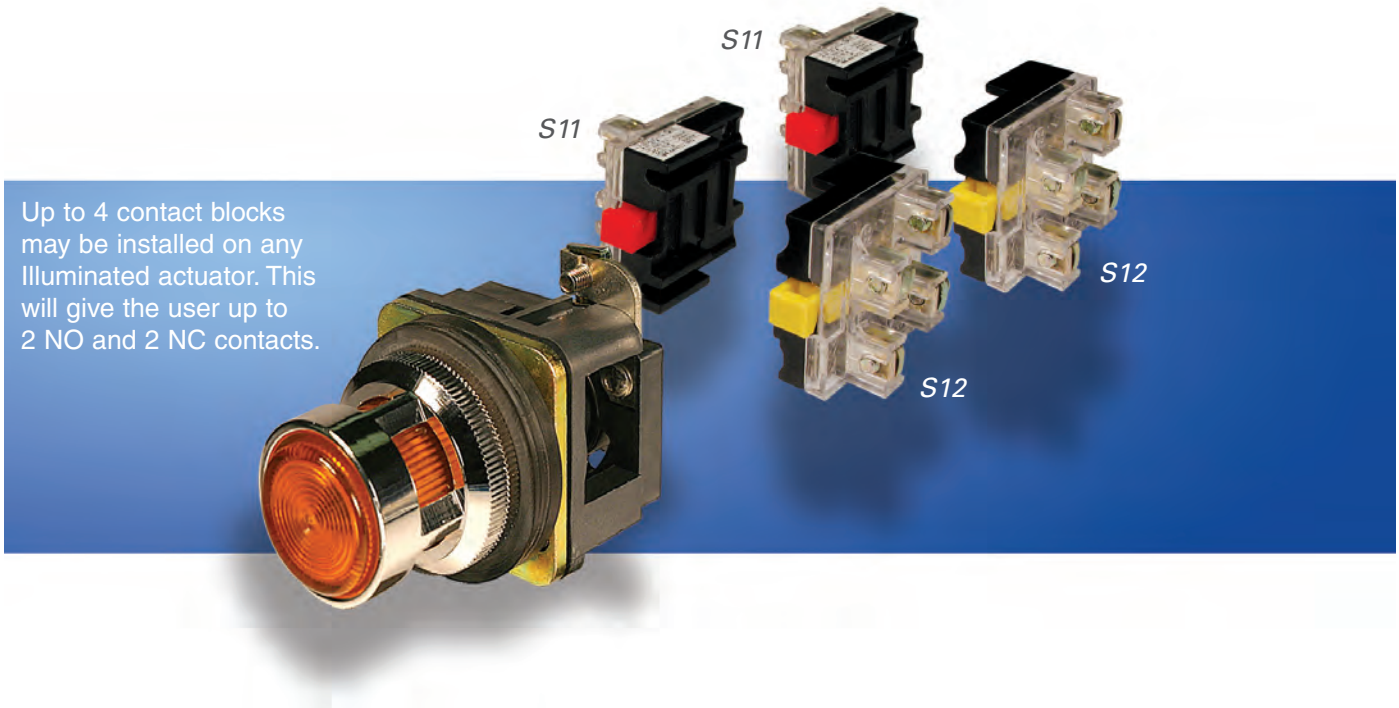

Up to 4 contact blocks may be installed on any Illuminated actuator. This will give the user up to 2 NO and 2 NC contacts.

30mm Selector Switch Metal Operators

C US
E225660

CE

Certified for
NEMA Type 4X
12 environment.

Selector Maintained & Momentary



Other colors available upon request. Please contact Altech for further information and part numbers.

	Color	Cat No.
	2 Position Maintained	
■	Black	AS2-2P
	3 Position Maintained	
■	Black	AS2-3P
	2 Position Momentary	
■	Black	AS2-2PSR

Key Selector Switch

Keyed Alike



To be used for applications where single or multiple operators are used, but the same key configurations are required. Standard key selector switches have the same key configuration (Cat. No. KY30).

Function	Key Removal		Cat No.
2 Position			
Maintained		Left/Right	AK2-2PB
Momentary		Left	AK2-2POSR
Maintained		Right	AK2-2PI
Maintained		Left	AK2-2PO
3 Position			
Maintained		Left/Right	AK2-3PB
Maintained		Center	AK2-3PC



Replacement Key — **KY30**

Key Selector Switch

Keyed Differently



To be used for applications where multiple operators are used, but different key configurations are required. Each cat. no. have different key configurations.

Function	Key Removal		Cat No.
2 Position			
Maintained		Left	AK2-2PO-KD
Momentary		Left	AK2-2PO-KD1
Maintained		Left	AK2-2PO-KD2
Maintained		Left	AK2-2PO-KD4
Maintained		Left	AK2-2PO-KD5
3 Position			
Maintained		Center	AK2-3PC-KD
Maintained		Center	AK2-3PC-KD1
Maintained		Center	AK2-3PC-KD2
Maintained		Center	AK2-3PC-KD3

Altech Corp.® • 35 Royal Road • Flemington, NJ 08822-6000 • Phone (908)806-9400 • FAX (908)806-9490 • www.altechcorp.com

Dimensional Drawings

All dimensions shown in millimeters.
To convert to inches multiply by 0.03937

Flush Maintained and Momentary

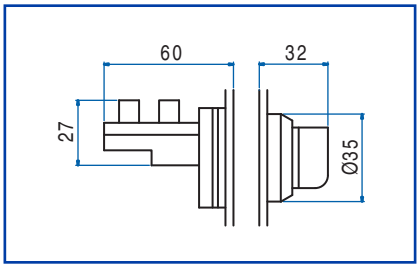

Key Selector

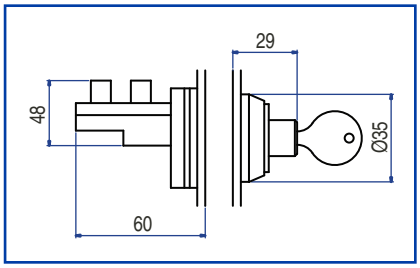

Contact Elements

Description	Cat. No.
1 Normally Open + 1 Normally Closed Silver Contacts	S11
2 Normally Open + 2 Normally Closed Silver Contacts	S11 + S12
For additional contacts, see diagram at right.	

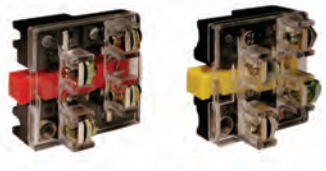

Contact Installation Screws

Type	Dimensions	Used with
SC25	M4 x 25 mm	S11
SC45	M4 x 45 mm	S11 + S12
SC65	M4 x 65 mm	2x S11 + S12
SC90	M4 x 90 mm	2x S11 + 2x S12

** When using more than two contact blocks, additonal screws must be purchased separately (SC65 and SC90).*

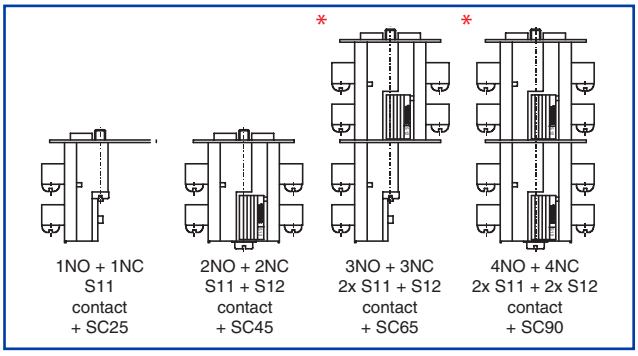

Exploded Assembly View

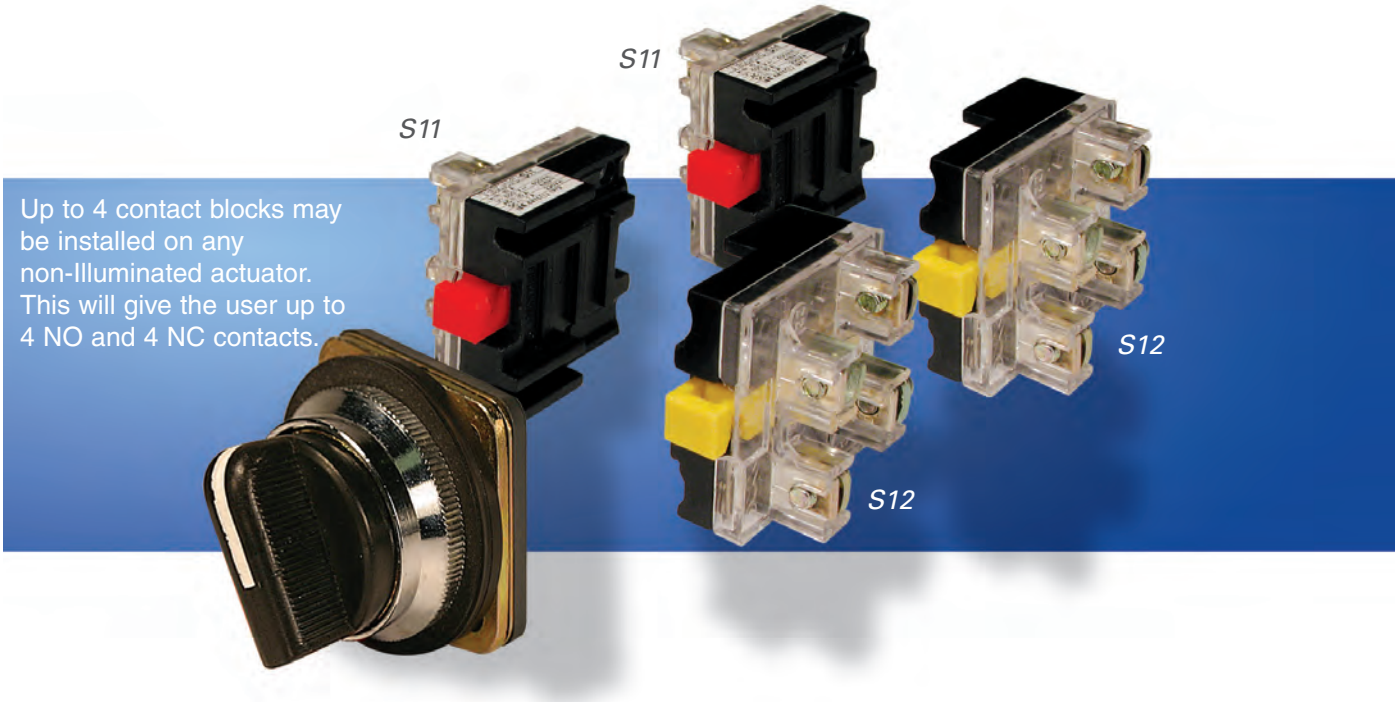

Up to 4 contact blocks may be installed on any non-Illuminated actuator. This will give the user up to 4 NO and 4 NC contacts.

30mm Non-Illuminated Metal Operators

c UL us
E225660

CE

Certified for
NEMA Type 4X
12 environment.

Mushroom with Key



All keys are “keyed alike”. Different keys are available on request.
Other colors are available on request.

Color	Function	Cat No.
Press to Lock, Key to Release		
Black	Maintained	AMLKB2
Red	Maintained	AMLKB4
Key to Lock, Key to Release		
Black	Maintained	AMKB2
Red	Maintained	AMKB4

Mushroom with Indicating Arrows
(Press to lock, turn to release.)

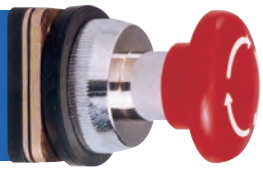

Other colors are available on request.

Color	Function	Cat No.
Press to Lock, Turn to Release		
Black	Maintained	AML2
Red	Maintained	AML4

Mushroom Momentary

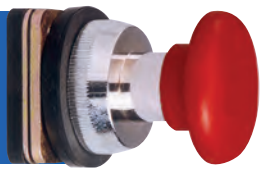

Color	Function	Cat No.
White	Momentary	AM1
Black	Momentary	AM2
Green	Momentary	AM3
Red	Momentary	AM4
Blue	Momentary	AM6
Yellow	Momentary	AM8

Altech Corp.® • 35 Royal Road • Flemington, NJ 08822-6000 • Phone (908)806-9400 • FAX (908)806-9490 • www.altechcorp.com

Dimensional Drawings

All dimensions shown in millimeters.
To convert to inches multiply by 0.03937

Mushroom with Key

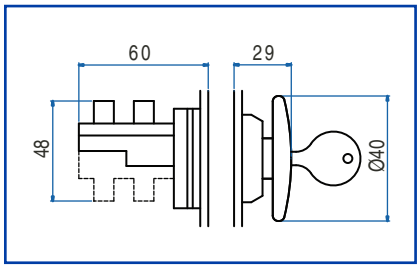

Mushroom with Indicating Arrows

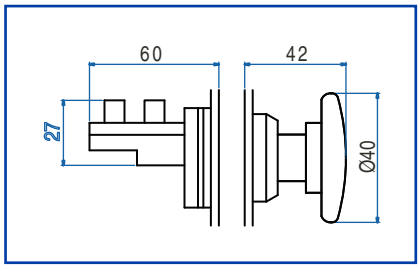

Mushroom Momentary

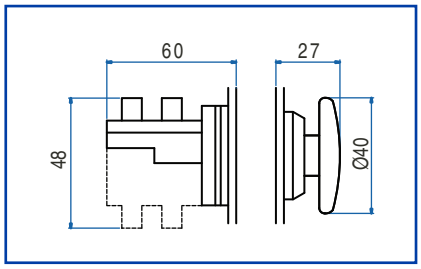

Contact Elements

Description	Cat. No.
1 Normally Open + 1 Normally Closed Silver Contacts	S11
2 Normally Open + 2 Normally Closed Silver Contacts	S11 + S12
For additional contacts, see diagram at right.	



Contact Installation Screws

Type	Dimensions	Used with
SC25	M4 x 25 mm	S11
SC45	M4 x 45 mm	S11 + S12
SC65	M4 x 65 mm	2x S11 + S12
SC90	M4 x 90 mm	2x S11 + 2x S12

** When using more than two contact blocks, additonal screws must be purchased separately (SC65 and SC90).*

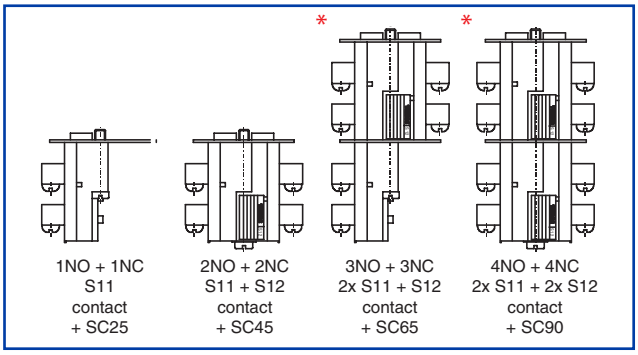

Exploded Assembly View

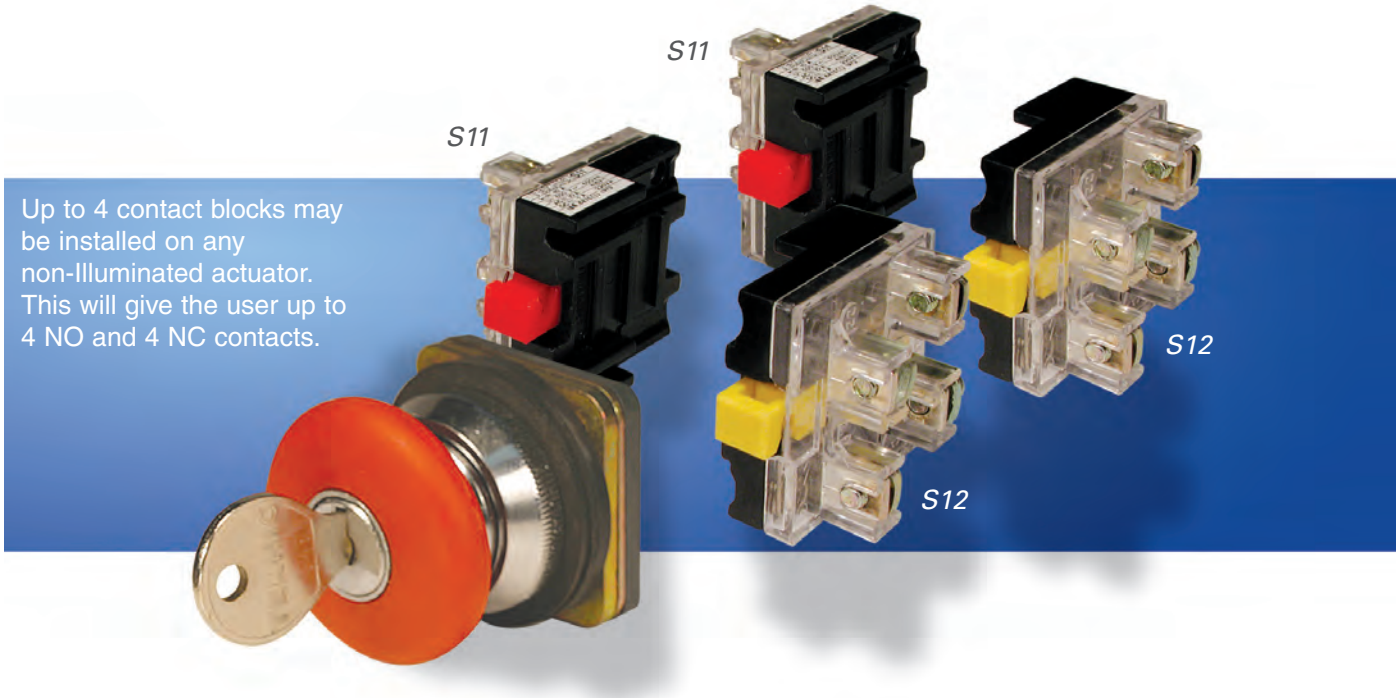

Up to 4 contact blocks may be installed on any non-Illuminated actuator. This will give the user up to 4 NO and 4 NC contacts.

30mm Metal Pilot Lights

c UL us
E225660

CE

Certified for
NEMA Type 4X
12 environment.

Pilot Light

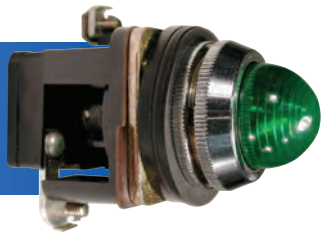

Note:
All LED pilot lights and illuminated actuators at a specified voltage will operate on AC and DC. Except for 110 and 230V specify AC or DC type.

Dimensional Drawings

Pilot Light

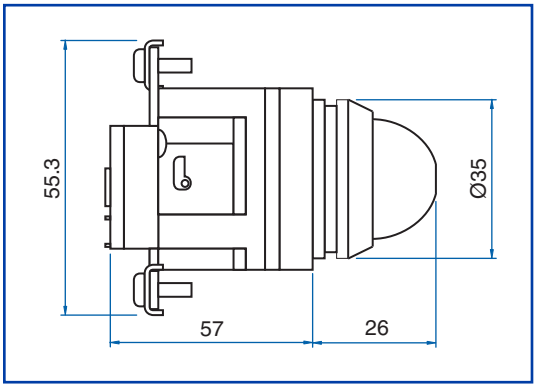



Replacement bulbs available.
See page 54.

Filament Bulb

Color	Voltage	Cat No.
24V AC/DC (filament bulb)		
White	24V AC/DC	PLB1-024
Green	24V AC/DC	PLB3-024
Red	24V AC/DC	PLB4-024
Amber	24V AC/DC	PLB5-024
Blue	24V AC/DC	PLB6-024
Clear	24V AC/DC	PLB7-024
Yelllow	24V AC/DC	PLB8-024
48V AC/DC (filament bulb)		
White	48V AC/DC	PLB1-048
Green	48V AC/DC	PLB3-048
Red	48V AC/DC	PLB4-048
Amber	48V AC/DC	PLB5-048
Blue	48V AC/DC	PLB6-048
Clear	48V AC/DC	PLB7-048
Yelllow	48V AC/DC	PLB8-048
110V AC/DC (filament bulb)		
White	110V AC/DC	PLB1-110
Green	110V AC/DC	PLB3-110
Red	110V AC/DC	PLB4-110
Amber	110V AC/DC	PLB5-110
Blue	110V AC/DC	PLB6-110
Clear	110V AC/DC	PLB7-110
Yelllow	110V AC/DC	PLB8-110
230V AC/DC (filament bulb)		
White	230V AC/DC	PLB1-230
Green	230V AC/DC	PLB3-230
Red	230V AC/DC	PLB4-230
Amber	230V AC/DC	PLB5-230
Blue	230V AC/DC	PLB6-230
Clear	230V AC/DC	PLB7-230
Yelllow	230V AC/DC	PLB8-230

LED Bulb

Color	Voltage	Cat No.
24V AC/DC (LED bulb)		
White	24V AC/DC	PLB1LB-024
Green	24V AC/DC	PLB3LB-024
Red	24V AC/DC	PLB4LB-024
Amber	24V AC/DC	PLB5LB-024
Blue	24V AC/DC	PLB6LB-024
Clear	24V AC/DC	PLB7LB-024
Yelllow	24V AC/DC	PLB8LB-024
48V AC/DC (LED bulb)		
White	48V AC/DC	PLB1LB-048
Green	48V AC/DC	PLB3LB-048
Red	48V AC/DC	PLB4LB-048
Amber	48V AC/DC	PLB5LB-048
Blue	48V AC/DC	PLB6LB-048
Clear	48V AC/DC	PLB7LB-048
Yelllow	48V AC/DC	PLB8LB-048
110V AC/DC (LED bulb)		
White	110V AC	PLB1LB-110
Green	110V AC	PLB3LB-110
Red	110V AC	PLB4LB-110
Amber	110V AC	PLB5LB-110
Blue	110V AC	PLB6LB-110
Clear	110V AC	PLB7LB-110
Yelllow	110V AC	PLB8LB-110
230V AC* (LED bulb)		
White	230V AC*	PLB1LB-230
Green	230V AC*	PLB3LB-230
Red	230V AC*	PLB4LB-230
Amber	230V AC*	PLB5LB-230
Blue	230V AC*	PLB6LB-230
Clear	230V AC*	PLB7LB-230
Yelllow	230V AC*	PLB8LB-230

**230V DC version is available on request.*

Altech Corp.® • 35 Royal Road • Flemington, NJ 08822-6000 • Phone (908)806-9400 • FAX (908)806-9490 • www.altechcorp.com

Aluminum Enclosures for 30mm Operators

Altech

c UL us
E225660

CE

Certified for
NEMA Type 4X
12 environment.



Aluminum (72mm Height)
Pressure Die Cast

Operator Capacity	Cat. No. Black base/ Grey Cover*	Color Black base/ Yellow Cover	Material Construction	Dimensions LxWxH mm (in.)	Cable Entry Thread Size	Mounting Hole Dia.
1	7011A13	7023A10	PDC Aluminum, EH	80x90x72 (3.15x3.54x2.83)	2xM20	4 X 6mm
2	7008C13	7017C10	PDC Aluminum, EH	80x135x72 (3.15x5.32x2.83)	2xM20	4 X 6mm
3	7006E13	7018E10	PDC Aluminum, EH	80x180x72 (3.15x7.09x2.83)	2xM20	4 X 6mm
4	7006G13	7010G10	PDC Aluminum, EH	80x225x72 (3.15x8.86x2.83)	2xM20	4 X 6mm
1	7012A13	7024A10	PDC Aluminum, EH	80x90x72 (3.15x3.54x2.83)	2x1/2"-14 NPT	4 X 6mm
2	7009C13	7018C10	PDC Aluminum, EH	80x135x72 (3.15x5.32x2.83)	2x1/2"-14 NPT	4 X 6mm
3	7007E13	7019E10	PDC Aluminum, EH	80x180x72 (3.15x7.09x2.83)	2x1/2"-14 NPT	4 X 6mm
4	7007G13	7011G10	PDC Aluminum, EH	80x225x72 (3.15x8.86x2.83)	2x1/2"-14 NPT	4 X 6mm

*Color code RAL 7032, Pebble Gray. Other colors available upon request.

1 - Operator Capacity

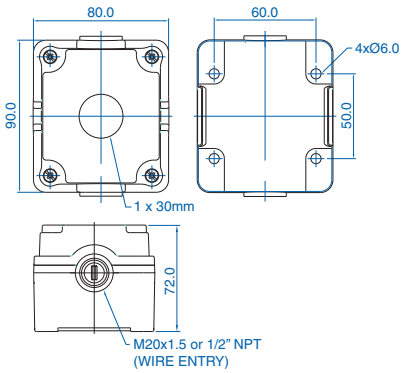

2 - Operator Capacity

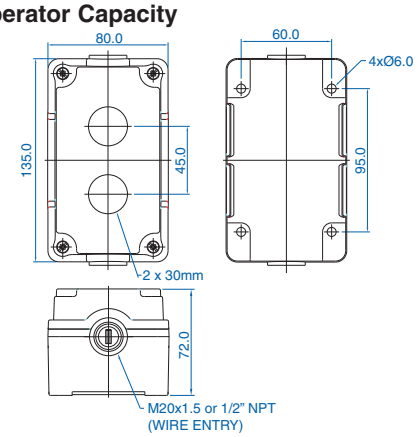

3 - Operator Capacity

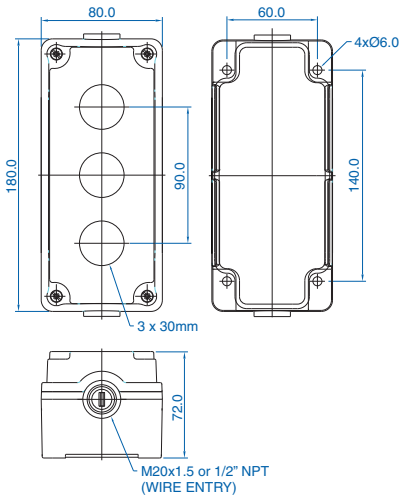

4 - Operator Capacity

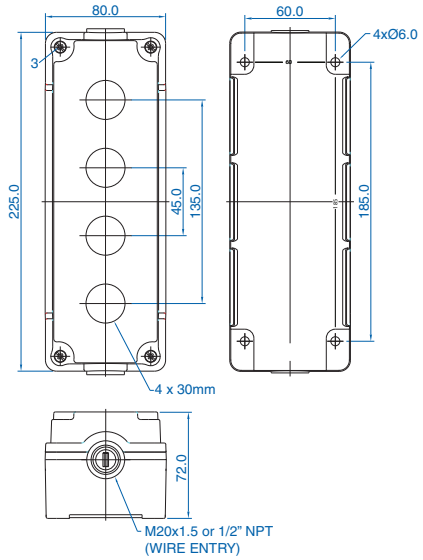

All dimensions shown in millimeters. To convert to inches multiply by 0.03937

30mm Push Button Accessories



Metal legend plates are engraved in horizontal and vertical orientations, one per side.



EMERGENCY STOP
LP41
Legend plate Ø 60mm yellow with black text.

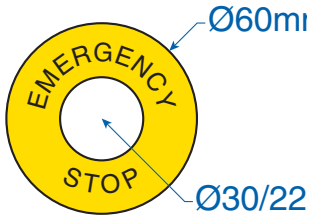

Title	Cat No.
AUTO	LP09
CLOSE	LP08
DOWN	LP07
EMERGENCY STOP	LP41
FAST	LP12
HAND	LP10
HAND, O, AUTO	LP36
INCH	LP14
LEFT	LP18
OFF	LP16
ON	LP15
OPEN	LP07

Title	Cat No.
OVER	LP74
POWER ON	LP20
RESET	LP13
REVERSE	LP04
RIGHT	LP17
RUN	LP24
SLOW	LP11
START	LP01
STOP (red)	LP02
TRIP	LP19
UNDER LOAD	LP108

Replacement Bulbs



Filament Bulbs

Color	Voltage	Cat No.
Clear	12V AC/DC	BA15D12
Clear	24V AC/DC	BA15D24
Clear	48V AC/DC	BA15D48
Clear	110V AC/DC	BA15D110
Clear	230V AC/DC	BA15D220

LED Bulbs

Color	Voltage	Cat No.
12V AC/DC		
White	12V AC/DC	MCB15112
Green	12V AC/DC	MCB15312
Red	12V AC/DC	MCB15412
Amber	12V AC/DC	MCB15512
Blue	12V AC/DC	MCB15612
Yellow	12V AC/DC	MCB15812

LED Bulbs

Color	Voltage	Cat No.
110V AC		
White	110V AC	MCB151110
Green	110V AC	MCB153110
Red	110V AC	MCB154110
Amber	110V AC	MCB155110
Blue	110V AC	MCB156110
Yellow	110V AC	MCB158110
110V DC		
White	110V DC	MCB151110D
Green	110V DC	MCB153110D
Red	110V DC	MCB154110D
Amber	110V DC	MCB155110D
Blue	110V DC	MCB156110D
Yellow	110V DC	MCB158110D
24V AC/DC		
White	24V AC/DC	MCB15124
Green	24V AC/DC	MCB15324
Red	24V AC/DC	MCB15424
Amber	24V AC/DC	MCB15524
Blue	24V AC/DC	MCB15624
Yellow	24V AC/DC	MCB15824

Color	Voltage	Cat No.
230V AC		
White	230V AC	MCB151230
Green	230V AC	MCB153230
Red	230V AC	MCB154230
Amber	230V AC	MCB155230
Blue	230V AC	MCB156230
Yellow	230V AC	MCB158230
230V DC		
White	230V DC	MCB151230D
Green	230V DC	MCB153230D
Red	230V DC	MCB154230D
Amber	230V DC	MCB155230D
Blue	230V DC	MCB156230D
Yellow	230V DC	MCB158230D
48V AC/DC		
White	48V AC/DC	MCB15148
Green	48V AC/DC	MCB15348
Red	48V AC/DC	MCB15448
Amber	48V AC/DC	MCB15548
Blue	48V AC/DC	MCB15648
Yellow	48V AC/DC	MCB15848

Maximum Power Consumption:

Supply Voltage	LED		FILAMENT BULBS	
	Power (max) in Watts	Current	Power (max) in Watts	Current
12V	0.5W	max 20mA	2W	max 166mA
24V	0.5W	max 20mA	2W	max 85mA
48V	0.5W	max 20mA	5W	max 105mA
110V	0.5W	max 20mA	5W	max 45mA
240V	1W	max 20mA	6W	max 25mA

These bulbs are available in various colors and voltages. LED based bulbs are a direct replacement for filament bulbs and do not require having to change any other components in your existing operator or pilot light.

These bulbs use high brightness LED chips which last for more than 100,000 hours and consume very little power. Heat generated by LED based bulbs is negligible, therefore no damage to the body of the lamp or any operator in case of Illuminated push buttons occurs.

These bulbs can be used to replace 12V AC/DC, 24V AC/DC, 48V AC/DC, 110V AC or DC and 240V AC or DC circuits directly. LED color indication is given on the bulb for easy identification.

Altech Corp.® • 35 Royal Road • Flemington, NJ 08822-6000 • Phone (908)806-9400 • FAX (908)806-9490 • www.altechcorp.com

Please visit altechcorp.com/pb for other available legend plates.

Lenses and Replacement Boots



Lenses for pilot lights

Color	Cat No.	Cat No. w/ bushing
White	PLL1	–
Green	PLL3	PLLA3
Red	PLL4	PLLA4
Amber	PLL5	–
Blue	PLL6	–
Clear	PLL7	–
Yellow	PLL8	–

Lenses for illuminated actuators

Color	Cat No.
White	ALL1
Green	ALL3
Red	ALL4
Amber	ALL5
Blue	ALL6
Clear	ALL7
Yellow	ALL8



Padlock

For mushroom actuator: Cat. No. PAM
For projecting actuator: Cat. No. PAP



Actuator Lock Plate

Cat. No.: ALP101

Rubber Boots for Booted Actuators



Color	Cat No.
White	BT1
Black	BT2
Green	BT3
Red	BT4
Blue	BT6
Yellow	BT8



1.2mm Actuator Rubber Washer

Cat. No.: ARW1.2

3.2mm Actuator Rubber Washer

Cat. No.: ARW3.2



Replacement Key

Cat. No.: KY30



Bulb Extractor

Cat. No.: 2BA9SE

Contact Block Installation Screws



Cat #.	Dimensions	Used With
SC25	M4 x 25 mm	S11 only
SC45	M4 x 45 mm	S11 + S12 (2NO + 2NC)
SC65	M4 x 65 mm	2 x S11 + S12 (3NO +3NC)
SC90	M4 x 90 mm	2 x S11 + 2 x S12 (4NO+4NC)

Contact Elements

Description	Cat. No.
1 Normally Open + 1 Normally Closed Silver Contacts	S11
2 Normally Open + 2 Normally Closed Silver Contacts	S11 + S12
For additional contacts, see diagram at right.	

S11

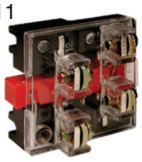

S12

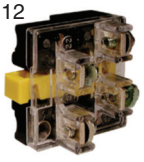

Contact Installation Screws

Type	Dimensions	Used with
SC25	M4 x 25 mm	S11
SC45	M4 x 45 mm	S11 + S12
SC65	M4 x 65 mm	2x S11 + S12
SC90	M4 x 90 mm	2x S11 + 2x S12

** When using more than two contact blocks, additonal screws must be purchased separately (SC45 and SC90).*

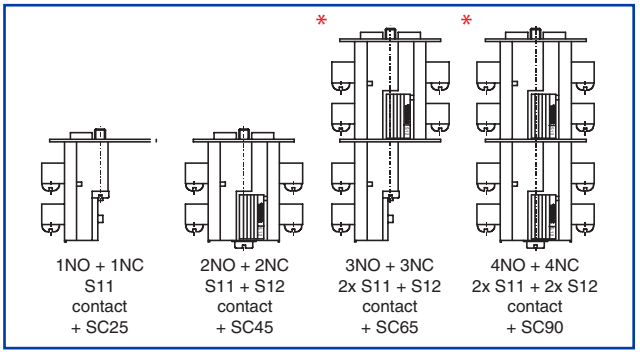

30mm Technical Notes

Characteristics

Environment

Temperature Range		-25°C to +70°C (-13°F to +158°F)
Degree of protection:	IEC 529 UL50	IP65 NEMA Type 4X, 12
Mechanical Life	All push buttons except maintained mushroom maintained mushroom	1 million of cycles 0.3 million of cycles

Mechanical Characteristics of contact elements

Contact Operation	NO+NC	Double break, self-wiping
Rated Insulation Voltage		500 V AC
Operating Travel	Push buttons	Changing NC state 2.4mm Changing NO state 4.3mm Travel 8.7mm
Terminal Capacity	Wiring	2x1.5 sq.mm (2x16 AWG) or 1x2.5 sq.mm (14 AWG)
Contact Material	Bimetal (Cu/Ag)	Standard single element
Short Circuit Protection		10A HRC fuse
Rated Make Break	UL508, AC: A600; 600V, 1.2A DC: Q600; 600V, 0.1A	standard block with screw clamp terminals 415V AC, 4A standard block with screw clamp terminals 220V AC, 0.5A
Dielectric Strength	Push Buttons, Pilot Lights	2500V for 1 minute

Altech Corp.® • 35 Royal Road • Flemington, NJ 08822-6000 • Phone (908)806-9400 • FAX (908)806-9490 • www.altechcorp.com

Index

Cat. No.	Page
1.01E+16	53
1.01E+16	53
2.01E+16	36
2.01E+16	37
2.01E+16	36
2.01E+16	37
1003A13	53
1004C13	53
1004G13	53
1005A13	53
1006C13	53
1006G13	53
153-601	34
153-601/L	34
153-901	34
153-901/L	34
153-902	34
153-902/1H	34
153-902/L	34
153-903	34
153-903/L	34
153-904	34
153-904/L	34
153-905	34
153-905/L	34
2005A13	36
2005G13	37
2006C13	36
2008G13	36
2009A13	37
2009G13	37
2010G13	36
2011C13	37
2014C13	36
2015A13	36
2015C13	37
2016A13	37
2AB1	6
2AB2	6
2AB3	6
2AB4	6
2AB6	6
2AB8	6
2ADP	40
2AF1	6
2AF1RH	6
2AF2	6
2AF2RH	6
2AF3	6
2AF3RH	6
2AF4	6
2AF4RH	6
2AF6	6
2AF6RH	6
2AF8	6
2AF8RH	6
2AK2-01	16
2AK2-02	16
2AK2-03	16
2AK2-04	16
2AK2-05	16
2AK2-06	16
2AK2-07	16
2AK2-08	16
2AK2-09	16
2AK2-10	16
2AK2-11	16
2ALBT7	31
2ALBT7	40
2ALF1LB-012	22
2ALF1LB-024	22
2ALF1LB-048	22
2ALF1LB-110	22
2ALF1LB-110D	22
2ALF1LB-230	22
2ALF1LB-230D	22
2ALF3LB-012	22
2ALF3LB-024	22
2ALF3LB-048	22
2ALF3LB-110	22
2ALF3LB-110D	22
2ALF3LB-230	22
2ALF3LB-230D	22
2ALF4LB-012	22
2ALF4LB-024	22
2ALF4LB-048	22
2ALF4LB-110	22
2ALF4LB-110D	22
2ALF4LB-230	22
2ALF4LB-230D	22
2ALF5LB-012	22
2ALF5LB-024	22
2ALF5LB-048	22
2ALF5LB-110	22
2ALF5LB-110D	22
2ALF5LB-230	22
2ALF5LB-230D	22
2ALF6LB-012	22
2ALF6LB-024	22
2ALF6LB-048	22
2ALF6LB-110	22
2ALF6LB-110D	22
2ALF6LB-230	22
2ALF6LB-230D	22
2ALF7LB-012	22
2ALF7LB-024	22
2ALF7LB-048	22
2ALF7LB-110	22
2ALF7LB-110D	22
2ALF7LB-230	22
2ALF7LB-230D	22
2ALF8LB-012	22
2ALF8LB-024	22
2ALF8LB-048	22
2ALF8LB-110	22
2ALF8LB-110D	22
2ALF8LB-230	22
2ALF8LB-230D	22
2ALM1L	39
2ALM3L	39
2ALM4L	39
2ALM5L	39
2ALM6L	39
2ALM7L	39
2ALM8L	39
2ALM1LB-012	12
2ALM1LB-024	12
2ALM1LB-048	12
2ALM1LB-110	12
2ALM1LB-230	12
2ALM3LB-012	12
2ALM3LB-024	12
2ALM3LB-048	12
2ALM3LB-110	12
2ALM3LB-230	12
2ALM4LB-012	12
2ALM4LB-024	12
2ALM4LB-048	12
2ALM4LB-110	12
2ALM4LB-230	12
2ALM5LB-012	12
2ALM5LB-024	12
2ALM5LB-048	12
2ALM5LB-110	12
2ALM5LB-230	12
2ALM6LB-012	12
2ALM6LB-024	12
2ALM6LB-048	12
2ALM6LB-110	12
2ALM6LB-230	12
2ALM7LB-012	12
2ALM7LB-024	12
2ALM7LB-048	12
2ALM7LB-110	12
2ALM7LB-230	12
2ALM8LB-012	12
2ALM8LB-024	12
2ALM8LB-048	12
2ALM8LB-110	12
2ALM8LB-230	12
2ALMPP1LB-012	13
2ALMPP1LB-024	13
2ALMPP1LB-048	13
2ALMPP1LB-110	13
2ALMPP1LB-230	13
2ALMPP3LB-012	13
2ALMPP3LB-024	13
2ALMPP3LB-048	13
2ALMPP3LB-110	13
2ALMPP3LB-230	13
2ALMPP4LB-012	13
2ALMPP4LB-024	13
2ALMPP4LB-048	13
2ALMPP4LB-110	13
2ALMPP4LB-230	13
2ALMPP5LB-012	13
2ALMPP5LB-024	13
2ALMPP5LB-048	13
2ALMPP5LB-110	13
2ALMPP5LB-230	13
2ALMPP6LB-012	13
2ALMPP6LB-024	13
2ALMPP6LB-048	13
2ALMPP6LB-110	13
2ALMPP6LB-230	13
2ALMPP7LB-012	13
2ALMPP7LB-024	13
2ALMPP7LB-048	13
2ALMPP7LB-110	13
2ALMPP7LB-230	13
2ALMPP8LB-012	13
2ALMPP8LB-024	13
2ALMPP8LB-048	13
2ALMPP8LB-110	13
2ALMPP8LB-230	13
2ALP1LB-012	20
2ALP1LB-024	20
2ALP1LB-048	20
2ALP1LB-110D	20
2ALP1LB-230	20
2ALP1LB-230D	20
2ALP3LB-012	20
2ALP3LB-024	20
2ALP3LB-048	20
2ALP3LB-110	20
2ALP3LB-110D	20
2ALP3LB-230	20
2ALP3LB-230D	20
2ALP4LB-012	20
2ALP4LB-024	20
2ALP4LB-048	20
2ALP4LB-110	20
2ALP4LB-110D	20
2ALP4LB-230	20
2ALP4LB-230D	20
2ALP5LB-012	20
2ALP5LB-024	20
2ALP5LB-048	20
2ALP5LB-110	20
2ALP5LB-110D	20
2ALP5LB-230	20
2ALP5LB-230D	20
2ALP6LB-012	20
2ALP6LB-024	20
2ALP6LB-048	20
2ALP6LB-110	20
2ALP6LB-110D	20
2ALP6LB-230	20
2ALP6LB-230D	20
2ALP7LB-012	20
2ALP7LB-024	20
2ALP7LB-048	20
2ALP7LB-110	20
2ALP7LB-110D	20
2ALP7LB-230	20
2ALP7LB-230D	20
2ALP8LB-012	20
2ALP8LB-024	20
2ALP8LB-048	20
2ALP8LB-110	20
2ALP8LB-110D	20
2ALP8LB-230	20
2ALP8LB-230D	20
2AM1	8
2AM2	8
2AM3	8
2AM4	8
2AM6	8
2AM8	8
2AMJ1	8
2AMJ2	8
2AMJ3	8
2AMJ4	8
2AMJ6	8
2AMJ8	8
2AML1	10
2AML2	10
2AML3	10
2AML4	10
2AML4	31
2AML6	10
2AML8	10
2AMLJ1	10
2AMLJ2	10
2AMLJ3	10
2AMLJ4	10
2AMLJ6	10
2AMLJ8	10
2AMLKB1	10
2AMLKB2	10
2AMLKB3	10
2AMLKB4	10
2AMLKB6	10
2AMLKB8	10
2AMLS1	10
2AMLS2	10
2AMLS3	10
2AMLS4	10
2AMLS4	31
2AMLS6	10
2AMLS8	10
2AMPP1	8
2AMPP2	8
2AMPP3	8
2AMPP4	8
2AMPP4	31
2AMPP6	8
2AMPP8	8
2AMPPJ1	8
2AMPPJ2	8
2AMPPJ3	8
2AMPPJ4	8
2AMPPJ6	8
2AMPPJ8	8
2AP1	6
2AP2	6
2AP3	6
2AP4	6
2AP6	6
2AP8	6
2AS2-1	16
2AS2-2	16
2AS2-3	16
2AS2-4	16
2AS2-5	16
2AS2-6	16
2AS2E-1	16
2AS2E-2	16
2AS2E-3	16
2AS2E-4	16
2AS2E-5	16
2AS2E-6	16
2ASL1LB-1-012	18
2ASL1LB-1-024	18
2ASL1LB-1-048	18
2ASL1LB-1-110	18
2ASL1LB-1-110D	18
2ASL1LB-1-230	18
2ASL1LB-1-230D	18
2ASL1LB-2-012	18
2ASL1LB-2-024	18
2ASL1LB-2-048	18
2ASL1LB-2-110	18
2ASL1LB-2-110D	18
2ASL1LB-2-230	18
2ASL1LB-2-230D	18
2ASL1LB-3-012	18
2ASL1LB-3-024	18

Index

Cat. No.	Page
2ASL1LB-3-048	18
2ASL1LB-3-110	18
2ASL1LB-3-110D	18
2ASL1LB-3-230	18
2ASL1LB-3-230D	18
2ASL1LB-4-012	18
2ASL1LB-4-024	18
2ASL1LB-4-048	18
2ASL1LB-4-110	18
2ASL1LB-4-110D	18
2ASL1LB-4-230	18
2ASL1LB-4-230D	18
2ASL1LB-5-012	18
2ASL1LB-5-024	18
2ASL1LB-5-048	18
2ASL1LB-5-110	18
2ASL1LB-5-110D	18
2ASL1LB-5-230	18
2ASL1LB-5-230D	18
2ASL1LB-6-012	18
2ASL1LB-6-024	18
2ASL1LB-6-048	18
2ASL1LB-6-110	18
2ASL1LB-6-110D	18
2ASL1LB-6-230	18
2ASL1LB-6-230D	18
2ASL3LB-1-012	18
2ASL3LB-1-024	18
2ASL3LB-1-048	18
2ASL3LB-1-110	18
2ASL3LB-1-110D	18
2ASL3LB-1-230	18
2ASL3LB-1-230D	18
2ASL3LB-2-012	18
2ASL3LB-2-024	18
2ASL3LB-2-048	18
2ASL3LB-2-110	18
2ASL3LB-2-110D	18
2ASL3LB-2-230	18
2ASL3LB-2-230D	18
2ASL3LB-3-012	18
2ASL3LB-3-024	18
2ASL3LB-3-048	18
2ASL3LB-3-110	18
2ASL3LB-3-110D	18
2ASL3LB-3-230	18
2ASL3LB-3-230D	18
2ASL3LB-4-012	18
2ASL3LB-4-024	18
2ASL3LB-4-048	18
2ASL3LB-4-110	18
2ASL3LB-4-110D	18
2ASL3LB-4-230	18
2ASL3LB-4-230D	18
2ASL3LB-5-012	18
2ASL3LB-5-024	18
2ASL3LB-5-048	18
2ASL3LB-5-110	18
2ASL3LB-5-110D	18
2ASL3LB-5-230	18
2ASL3LB-5-230D	18
2ASL3LB-6-012	18
2ASL3LB-6-024	18
2ASL3LB-6-048	18
2ASL3LB-6-110	18
2ASL3LB-6-110D	18
2ASL3LB-6-230	18
2ASL3LB-6-230D	18
2ASL4LB-1-012	18
2ASL4LB-1-024	18
2ASL4LB-1-048	18
2ASL4LB-1-110	18
2ASL4LB-1-110D	18
2ASL4LB-1-230	18
2ASL4LB-1-230D	18
2ASL4LB-2-012	18
2ASL4LB-2-024	18
2ASL4LB-2-048	18
2ASL4LB-2-110	18
2ASL4LB-2-110D	18
2ASL4LB-2-230	18
2ASL4LB-2-230D	18
2ASL4LB-3-012	18
2ASL4LB-3-024	18
2ASL4LB-3-048	18
2ASL4LB-3-110	18
2ASL4LB-3-110D	18
2ASL4LB-3-230	18
2ASL4LB-3-230D	18
2ASL4LB-4-012	18
2ASL4LB-4-024	18
2ASL4LB-4-048	18
2ASL4LB-4-110	18
2ASL4LB-4-110D	18
2ASL4LB-4-230	18
2ASL4LB-4-230D	18
2ASL4LB-5-012	18
2ASL4LB-5-024	18
2ASL4LB-5-048	18
2ASL4LB-5-110	18
2ASL4LB-5-110D	18
2ASL4LB-5-230	18
2ASL4LB-5-230D	18
2ASL4LB-6-012	18
2ASL4LB-6-024	18
2ASL4LB-6-048	18
2ASL4LB-6-110	18
2ASL4LB-6-110D	18
2ASL4LB-6-230	18
2ASL4LB-6-230D	18
2ASL5LB-1-012	18
2ASL5LB-1-024	18
2ASL5LB-1-048	18
2ASL5LB-1-110	18
2ASL5LB-1-110D	18
2ASL5LB-1-230	18
2ASL5LB-1-230D	18
2ASL5LB-2-012	18
2ASL5LB-2-024	18
2ASL5LB-2-048	18
2ASL5LB-2-110	18
2ASL5LB-2-110D	18
2ASL5LB-2-230	18
2ASL5LB-2-230D	18
2ASL5LB-3-012	18
2ASL5LB-3-024	18
2ASL5LB-3-048	18
2ASL5LB-3-110	18
2ASL5LB-3-110D	18
2ASL5LB-3-230	18
2ASL5LB-3-230D	18
2ASL5LB-4-012	18
2ASL5LB-4-024	18
2ASL5LB-4-048	18
2ASL5LB-4-110	18
2ASL5LB-4-110D	18
2ASL5LB-4-230	18
2ASL5LB-4-230D	18
2ASL5LB-5-012	18
2ASL5LB-5-024	18
2ASL5LB-5-048	18
2ASL5LB-5-110	18
2ASL5LB-5-110D	18
2ASL5LB-5-230	18
2ASL5LB-5-230D	18
2ASL5LB-6-012	18
2ASL5LB-6-024	18
2ASL5LB-6-048	18
2ASL5LB-6-110	18
2ASL5LB-6-110D	18
2ASL5LB-6-230	18
2ASL5LB-6-230D	18
2ASL6LB-1-012	18
2ASL6LB-1-024	18
2ASL6LB-1-048	18
2ASL6LB-1-110	18
2ASL6LB-1-110D	18
2ASL6LB-1-230	18
2ASL6LB-1-230D	18
2ASL6LB-2-012	18
2ASL6LB-2-024	18
2ASL6LB-2-048	18
2ASL6LB-2-110	18
2ASL6LB-2-110D	18
2ASL6LB-2-230	18
2ASL6LB-2-230D	18
2ASL6LB-3-012	18
2ASL6LB-3-024	18
2ASL6LB-3-048	18
2ASL6LB-3-110	18
2ASL6LB-3-110D	18
2ASL6LB-3-230	18
2ASL6LB-3-230D	18
2ASL6LB-4-012	18
2ASL6LB-4-024	18
2ASL6LB-4-048	18
2ASL6LB-4-110	18
2ASL6LB-4-110D	18
2ASL6LB-4-230	18
2ASL6LB-4-230D	18
2ASL6LB-5-012	18
2ASL6LB-5-024	18
2ASL6LB-5-048	18
2ASL6LB-5-110	18
2ASL6LB-5-110D	18
2ASL6LB-5-230	18
2ASL6LB-5-230D	18
2ASL6LB-6-012	18
2ASL6LB-6-024	18
2ASL6LB-6-048	18
2ASL6LB-6-110	18
2ASL6LB-6-110D	18
2ASL6LB-6-230	18
2ASL6LB-6-230D	18
2ASL7LB-1-012	18
2ASL7LB-1-024	18
2ASL7LB-1-048	18
2ASL7LB-1-110	18
2ASL7LB-1-110D	18
2ASL7LB-1-230	18
2ASL7LB-1-230D	18
2ASL7LB-2-012	18
2ASL7LB-2-024	18
2ASL7LB-2-048	18
2ASL7LB-2-110	18
2ASL7LB-2-110D	18
2ASL7LB-2-230	18
2ASL7LB-2-230D	18
2ASL7LB-3-012	18
2ASL7LB-3-024	18
2ASL7LB-3-048	18
2ASL7LB-3-110	18
2ASL7LB-3-110D	18
2ASL7LB-3-230	18
2ASL7LB-3-230D	18
2ASL7LB-4-012	18
2ASL7LB-4-024	18
2ASL7LB-4-048	18
2ASL7LB-4-110	18
2ASL7LB-4-110D	18
2ASL7LB-4-230	18
2ASL7LB-4-230D	18
2ASL7LB-5-012	18
2ASL7LB-5-024	18
2ASL7LB-5-048	18
2ASL7LB-5-110	18
2ASL7LB-5-110D	18
2ASL7LB-5-230	18
2ASL7LB-5-230D	18
2ASL7LB-6-012	18
2ASL7LB-6-024	18
2ASL7LB-6-048	18
2ASL7LB-6-110	18
2ASL7LB-6-110D	18
2ASL7LB-6-230	18
2ASL7LB-6-230D	18
2ASL8LB-1-012	18
2ASL8LB-1-024	18
2ASL8LB-1-048	18
2ASL8LB-1-110	18
2ASL8LB-1-110D	18
2ASL8LB-1-230	18
2ASL8LB-1-230D	18
2ASL8LB-2-012	18
2ASL8LB-2-024	18
2ASL8LB-2-048	18
2ASL8LB-2-110	18
2ASL8LB-2-110D	18
2ASL8LB-2-230	18
2ASL8LB-2-230D	18
2ASL8LB-3-012	18
2ASL8LB-3-024	18
2ASL8LB-3-048	18
2ASL8LB-3-110	18
2ASL8LB-3-110D	18
2ASL8LB-3-230	18
2ASL8LB-3-230D	18
2ASL8LB-4-012	18
2ASL8LB-4-024	18
2ASL8LB-4-048	18
2ASL8LB-4-110	18
2ASL8LB-4-110D	18
2ASL8LB-4-230	18
2ASL8LB-4-230D	18
2ASL8LB-5-012	18
2ASL8LB-5-024	18
2ASL8LB-5-048	18
2ASL8LB-5-110	18
2ASL8LB-5-110D	18
2ASL8LB-5-230	18
2ASL8LB-5-230D	18
2ASL8LB-6-012	18
2ASL8LB-6-024	18
2ASL8LB-6-048	18
2ASL8LB-6-110	18
2ASL8LB-6-110D	18
2ASL8LB-6-230	18
2ASL8LB-6-230D	18
2ATBT7	40
2ATF1-P2	14
2ATF1-P2-IO	14
2ATF2-F1	14
2ATF2-F1-IO	14
2ATF3-F4	14
2ATF3-F4-IO	14
2ATF3-P4	14
2ATF3-P4-IO	14
2ATF8-F2	14
2ATF8-F2-IO	14
2ATF8-P2	14
2ATF8-P2-IO	14
2ATL5LB F2F1-IO-012	15
2ATL5LB F2F1-IO-024	15
2ATL5LB F2F1-IO-048	15
2ATL5LB F2F1-IO-110	15
2ATL5LB F2F1-IO-230	15
2ATL5LB F3F4-012	15
2ATL5LB F3F4-024	15
2ATL5LB F3F4-048	15
2ATL5LB F3F4-110	15
2ATL5LB F3F4-230	15
2ATL5LB F3F4-IO-012	15
2ATL5LB F3F4-IO-024	15
2ATL5LB F3F4-IO-048	15
2ATL5LB F3F4-IO-110	15
2ATL5LB F3F4-IO-230	15
2ATL5LB F3P4-012	15
2ATL5LB F3P4-024	15
2ATL5LB F3P4-048	15
2ATL5LB F3P4-110	15
2ATL5LB F3P4-230	15
2ATL5LB F3P4-IO-012	15
2ATL5LB F3P4-IO-024	15
2ATL5LB F3P4-IO-048	15
2ATL5LB F3P4-IO-110	15
2ATL5LB F3P4-IO-230	15
2ATLBT7	40
2BA9SE	40
2BA9SE	55
2BP2	40
2BRK	40
2BRKT	40
2BT1	39
2BT2	39
2BT3	39
2BT4	39
2BT6	39
2BT7	31

Index

Cat. No.	Page
2BT7	.39
2BT7	.40
2BT8	.39
2ESS1	.40
2ESS1-UL	.40
2KY30	.48
2KY455	.10
2KY455	.16
2KY455	.40
2LAL1	.39
2LAL1L	.39
2LAL3	.39
2LAL3L	.39
2LAL4	.39
2LAL4L	.39
2LAL5	.39
2LAL5L	.39
2LAL6	.39
2LAL6L	.39
2LAL7	.39
2LAL7L	.39
2LAL8	.39
2LAL8L	.39
2LHB	.40
2LP01	.38
2LP01SP	.38
2LP02	.38
2LP02SP	.38
2LP03	.38
2LP03SP	.38
2LP04	.38
2LP04SP	.38
2LP05	.38
2LP05SP	.38
2LP06	.38
2LP06SP	.38
2LP07	.38
2LP07SP	.38
2LP08	.38
2LP08SP	.38
2LP09	.38
2LP10	.38
2LP101	.38
2LP102	.38
2LP103	.38
2LP104	.38
2LP105	.38
2LP106	.38
2LP107	.38
2LP108	.38
2LP10SP	.38
2LP11	.38
2LP12	.38
2LP12SP	.38
2LP13	.38
2LP13SP	.38
2LP14	.38
2LP14SP	.38
2LP15	.38
2LP15SP	.38
2LP16	.38
2LP16SP	.38
2LP17	.38
2LP17SP	.38
2LP18	.38
2LP18SP	.38
2LP19	.38
2LP19SP	.38
2LP20	.38
2LP20SP	.38
2LP21	.38
2LP22	.38
2LP23	.38
2LP24	.38
2LP25	.38
2LP26	.38
2LP27	.38
2LP28	.38
2LP28SP	.38
2LP29	.38
2LP29SP	.38
2LP30	.38
2LP30SP	.38
2LP31	.38
2LP31SP	.38
2LP32	.38
2LP32SP	.38
2LP33	.38
2LP33SP	.38
2LP34	.38
2LP35	.38
2LP36	.38
2LP36	.38
2LP36SP	.38
2LP37	.38
2LP37SP	.38
2LP38	.38
2LP38SP	.38
2LP39	.38
2LP40	.38
2LP41	.38
2LP41SP	.38
2LP42	.38
2LP43	.38
2LP44	.38
2LP45	.38
2LP46	.38
2LP47	.38
2LP48	.38
2LP49	.38
2LP50	.38
2LP51	.38
2LP55	.38
2LP56	.38
2LP57	.38
2LP58	.38
2LP59	.38
2LP66	.38
2LP69	.38
2LP70	.38
2LP71	.38
2LP72	.38
2LP73	.38
2LP74	.38
2LPXX	.38
2PAM	.40
2PAM7	.40
2PAP	.40
2PLB1LB-012	.24
2PLB1LB-024	.24
2PLB1LB-048	.24
2PLB1LB-110	.24
2PLB1LB-110D	.24
2PLB1LB-230	.24
2PLB1LB-230D	.24
2PLB3LB-012	.24
2PLB3LB-024	.24
2PLB3LB-048	.24
2PLB3LB-110	.24
2PLB3LB-110D	.24
2PLB3LB-230	.24
2PLB3LB-230D	.24
2PLB4LB-012	.24
2PLB4LB-024	.24
2PLB4LB-048	.24
2PLB4LB-110	.24
2PLB4LB-110D	.24
2PLB4LB-230	.24
2PLB4LB-230D	.24
2PLB5LB-012	.24
2PLB5LB-024	.24
2PLB5LB-048	.24
2PLB5LB-110	.24
2PLB5LB-110D	.24
2PLB5LB-230	.24
2PLB5LB-230D	.24
2PLB6LB-012	.24
2PLB6LB-024	.24
2PLB6LB-048	.24
2PLB6LB-110	.24
2PLB6LB-110D	.24
2PLB6LB-230	.24
2PLB6LB-230D	.24
2PLB7LB-012	.24
2PLB7LB-024	.24
2PLB7LB-048	.24
2PLB7LB-110	.24
2PLB7LB-110D	.24
2PLB7LB-230	.24
2PLB7LB-230D	.24
2PLB8LB-012	.24
2PLB8LB-024	.24
2PLB8LB-048	.24
2PLB8LB-110	.24
2PLB8LB-110D	.24
2PLB8LB-230	.24
2PLB8LB-230D	.24
2PLL1	.39
2PLL1L	.39
2PLL3	.39
2PLL3L	.39
2PLL4	.39
2PLL4L	.39
2PLL5	.39
2PLL5L	.39
2PLL6	.39
2PLL6L	.39
2PLL7	.39
2PLL7L	.39
2PLL8	.39
2PLL8L	.39
2PPM	.40
2PRG1	.31
2PRG1	.40
2PV2X	.30
2PV3X	.30
2PV4X	.30
2PV5X	.30
2PV6X	.30
2PV7X	.30
2PV8X	.30
2PV9X	.30
2RLW	.31
2SEBT2	.40
3-001-Q-11	.30
3-001-R-11	.30
3PLBR1L-012	.28
3PLBR1L-024	.28
3PLBR1L-048	.28
3PLBR1L-110	.28
3PLBR1L-230	.28
3PLBR1LS-012	.28
3PLBR1LS-024	.28
3PLBR1LS-048	.28
3PLBR1LS-110	.28
3PLBR1LS-230	.28
3PLBR3L-012	.28
3PLBR3L-024	.28
3PLBR3L-048	.28
3PLBR3L-110	.28
3PLBR3L-230	.28
3PLBR4L-012	.28
3PLBR4L-024	.28
3PLBR4L-048	.28
3PLBR4L-110	.28
3PLBR4L-230	.28
3PLBR5L-012	.28
3PLBR5L-024	.28
3PLBR5L-048	.28
3PLBR5L-110	.28
3PLBR5L-230	.28
3PLBR6L-012	.28
3PLBR6L-024	.28
3PLBR6L-048	.28
3PLBR6L-110	.28
3PLBR6L-230	.28
3PLBR7L-012	.28
3PLBR7L-024	.28
3PLBR7L-048	.28
3PLBR7L-110	.28
3PLBR7L-230	.28
3PLBR7LS-012	.28
3PLBR7LS-024	.28
3PLBR7LS-048	.28
3PLBR7LS-110	.28
3PLBR7LS-230	.28
3PLBR8L-012	.28
3PLBR8L-024	.28
3PLBR8L-048	.28
3PLBR8L-110	.28
3PLBR8L-230	.28
3PRG1	.31
3PSF101	.26
3PSF102	.26
3PSF110	.26
3PSF111	.26
3PSF120	.26
3PSF201	.26
3PSF202	.26
3PSF210	.26
3PSF211	.26
3PSF220	.26
3PSF301	.26
3PSF302	.26
3PSF310	.26
3PSF311	.26
3PSF320	.26
3PSF401	.26
3PSF402	.26
3PSF410	.26
3PSF411	.26
3PSF420	.26
3PSF601	.26
3PSF602	.26
3PSF610	.26
3PSF611	.26
3PSF620	.26
3PSF801	.26
3PSF802	.26
3PSF810	.26
3PSF811	.26
3PSF820	.26
3PSFPP101	.26
3PSFPP110	.26
3PSFPP111	.26
3PSFPP201	.26
3PSFPP210	.26
3PSFPP211	.26
3PSFPP301	.26
3PSFPP310	.26
3PSFPP311	.26
3PSFPP401	.26
3PSFPP410	.26
3PSFPP411	.26
3PSFPP601	.26
3PSFPP610	.26
3PSFPP611	.26
3PSFPP801	.26
3PSFPP810	.26
3PSFPP811	.26
3PSPP102	.26
3PSPP120	.26
3PSPP202	.26
3PSPP220	.26
3PSPP302	.26
3PSPP320	.26
3PSPP402	.26
3PSPP420	.26
3PSPP602	.26
3PSPP620	.26
3PSPP802	.26
3PSPP820	.26
4-001-Q-10	.30
4-001-R-10	.30
5308 959	.34
7211 981	.34
AB1	.44
AB2	.44
AB3	.44
AB4	.44
AB6	.44
AB8	.44
ADW	.40
AF1	.44
AF2	.44
AF3	.44
AF4	.44
AF6	.44

Index

Cat. No.	Page
AF8	44
AK2-2PB	48
AK2-2PI	48
AK2-2PO	48
AK2-2PO-KD	48
AK2-2PO-KD1	48
AK2-2PO-KD2	48
AK2-2PO-KD4	48
AK2-2PO-KD5	48
AK2-2POSR	48
AK2-3PB	48
AK2-3PC	48
AK2-3PC-KD	48
AK2-3PC-KD1	48
AK2-3PC-KD2	48
AK2-3PC-KD3	48
ALF1-024	46
ALF1-048	46
ALF1-110	46
ALF1-230	46
ALF1LB-024	46
ALF1LB-048	46
ALF1LB-110	46
ALF1LB-230	46
ALF3-024	46
ALF3-048	46
ALF3-110	46
ALF3-230	46
ALF3LB-024	46
ALF3LB-048	46
ALF3LB-110	46
ALF3LB-230	46
ALF4-024	46
ALF4-048	46
ALF4-110	46
ALF4-230	46
ALF4LB-024	46
ALF4LB-048	46
ALF4LB-110	46
ALF4LB-230	46
ALF5-024	46
ALF5-048	46
ALF5-110	46
ALF5-230	46
ALF5LB-024	46
ALF5LB-048	46
ALF5LB-110	46
ALF5LB-230	46
ALF6-024	46
ALF6-048	46
ALF6-110	46
ALF6-230	46
ALF6LB-024	46
ALF6LB-048	46
ALF6LB-110	46
ALF6LB-230	46
ALF7-024	46
ALF7-048	46
ALF7-110	46
ALF7-230	46
ALF7LB-024	46
ALF7LB-048	46
ALF7LB-110	46
ALF7LB-230	46
ALF8-024	46
ALF8-048	46
ALF8-110	46
ALF8-230	46
ALF8LB-024	46
ALF8LB-048	46
ALF8LB-110	46
ALF8LB-230	46
ALP101	55
AM1	50
AM2	50
AM3	50
AM4	50
AM6	50
AM8	50
AMKB2	50
AMKB4	50
AML2	50
AML4	50
AMLKB2	50
AMLKB4	50
AP1	44
AP2	44
AP3	44
AP4	44
AP6	44
AP8	44
ARW1.2	55
AS2-2P	48
AS2-2PSR	48
AS2-3P	48
BA15D110	54
BA15D12	54
BA15D220	54
BA15D24	54
BA15D48	54
BA9SD110	39
BA9SD12	39
BA9SD220	39
BA9SD24	39
BA9SD48	39
BT1	55
BT2	55
BT3	55
BT4	55
BT6	55
BT8	55
KY30	55
LP01	54
LP02	54
LP04	54
LP07	54
LP07	54
LP08	54
LP09	54
LP10	54
LP108	54
LP11	54
LP12	54
LP13	54
LP14	54
LP15	54
LP16	54
LP17	54
LP18	54
LP19	54
LP20	54
LP24	54
LP36	54
LP41	54
LP74	54
M20	40
MCB151110	54
MCB151110D	54
MCB15112	54
MCB151230	54
MCB151230D	54
MCB15124	54
MCB15148	54
MCB153110	54
MCB153110D	54
MCB15312	54
MCB153230	54
MCB153230D	54
MCB15324	54
MCB15348	54
MCB154110	54
MCB154110D	54
MCB15412	54
MCB154230	54
MCB154230D	54
MCB15424	54
MCB15448	54
MCB155110	54
MCB155110D	54
MCB15512	54
MCB155230	54
MCB155230D	54
MCB15524	54
MCB15548	54
MCB156110	54
MCB156110D	54
MCB15612	54
MCB156230	54
MCB156230D	54
MCB15624	54
MCB15648	54
MCB158110	54
MCB158110D	54
MCB15812	54
MCB158230	54
MCB158230D	54
MCB15824	54
MCB15848	54
MCB91110	39
MCB91110D	39
MCB9112	39
MCB91230	39
MCB91230D	39
MCB9124	39
MCB9148	39
MCB93110	39
MCB93110D	39
MCB94110	39
MCB94110D	39
MCB9412	39
MCB94230	39
MCB94230D	39
MCB9424	39
MCB9448	39
MCB95110	39
MCB95110D	39
MCB9512	39
MCB95230	39
MCB95230D	39
MCB9524	39
MCB9548	39
MCB96110	39
MCB96110D	39
MCB9612	39
MCB96230	39
MCB96230D	39
MCB9624	39
MCB9648	39
MCB98110	39
MCB98110D	39
MCB9812	39
MCB98230	39
MCB98230D	39
MCB9824	39
MCB9848	39
NPT1/2	40
P2AF1	31
P2AF1WA0	31
P2AF1WA90	31
P2AF2	31
P2AF2WA0	31
P2AF2WA90	31
P2AF3	31
P2AF4	31
P2AF6	31
P2AF7	31
P2AM4	31
P2AP2	31
P2AP3	31
P2AP4	31
P2AP6	31
P2AP8	31
P2AS2-1	31
P2AS2-3	31
P2AS2-4	31
P2BRK	31
P2MN	31
PAM	55
PAP	55
PLB1-024	52
PLB1-048	52
PLB1-110	52
PLB1-230	52
PLB1LB-024	52
PLB1LB-048	52
PLB1LB-110	52
PLB1LB-230	52
PLB3-024	52
PLB3-048	52
PLB3-110	52
PLB3-230	52
PLB3LB-024	52
PLB3LB-048	52
PLB3LB-110	52
PLB3LB-230	52
PLB4-024	52
PLB4-048	52
PLB4-110	52
PLB4-230	52
PLB4LB-024	52
PLB4LB-048	52
PLB4LB-110	52
PLB4LB-230	52
PLB5-024	52
PLB5-048	52
PLB5-110	52
PLB5-230	52
PLB5LB-024	52
PLB5LB-048	52
PLB5LB-110	52
PLB5LB-230	52
PLB6-024	52
PLB6-048	52
PLB6-110	52
PLB6-230	52
PLB6LB-024	52
PLB6LB-048	52
PLB6LB-110	52
PLB6LB-230	52
PLB7-024	52
PLB7-048	52
PLB7-110	52
PLB7-230	52
PLB7LB-024	52
PLB7LB-048	52
PLB7LB-110	52
PLB7LB-230	52
PLB8-024	52
PLB8-048	52
PLB8-110	52
PLB8-230	52
PLB8LB-024	52
PLB8LB-048	52
PLB8LB-110	52
PLB8LB-230	52
PLL1	55
PLL1	55
PLL3	55
PLL3	55
PLL4	55
PLL4	55
PLL5	55
PLL5	55
PLL6	55
PLL6	55
PLL7	55
PLL7	55
PLL8	55
PLL8	55
S1	41
S2	41
S3	41
S4	41
S5	41
S6	41
S7	41
S8	41
SC25	55
SC25	55
SC45	55
SC45	55
SC65	55
SC65	55
SC90	55
SC90	55

Commonly used metric and other useful conversions

Length		
inch [in.]	x25.4	=millimeters
millimeters [mm]	x0.03937	=inches
meters [m]	x3.281	=feet
miles [mi]	x1.609	=kilometers
kilometers [km]	x0.6214	=miles
Torque		
Newtonmeter [Nm]	x0.738	=lb-ft
lb-ft	x1.356	=Nm
lb-in	x0.113	=Nm
oz-in	x0.0071	=Nm
Power		
kilowatt [kW]	x1.341	=hp
hp	x0.7457	=kW
Moment of Inertia (WR^2)		
$lb\text{-}ft^2$	x0.042	$=kgm^2$
$kilogrammeter^2$ $[kgm^2]$	23.720	$=lb\text{-}ft^2$
Weight Mass and Force		
Newton [N]	x0.02248	=pounds
kilogram [kg]	x2.205	=pounds
pound [lb]	x4.448	=N
pound [lb]	x0.4536	=kg

Metric Cross-Sectional Areas[1]	American Wire Gauge		Metric Cross-Sections Areas[a]	American Wire Gauge	
Cross-Sectional Area mm^2	Equivalent Metric Area mm^2	AWG or MCM	Cross-Sectional Area mm^2	Equivalent Metric Area mm^2	AWG or MCM
0.50	0.519	20 AWG		21.15	4 AWG
	0.653	19	25.0	26.67	3
0.75	0.823	18	35.0	33.63	2
	1.04	17		42.41	1
	1.31	16	50.0	53.48	1/0
1.5				67.43	2/0
	1.65	15	70.0		
	2.08	14	95.0	85.03	3/0
2.5					
	2.62	13		107.20	4/0
	3.31	12	120.0	126.64	250 MCM
4.0	4.17	11	150.0	152.00	300
	5.26	10	185.0	177.35	350
				202.71	400
6.0	6.63	9	240.0	253.35	500
	8.37	8	300.0		
10.0			400.0	380.00	750
	10.55	7			
	13.30	6	500.0	506.71	1000
16.0	16.77	5	625.0		

[1]As per IEC Publ. 228

DEGREES CELCIUS VERSUS DEGREES FAHRENHEIT

°C	°F	°C	°F	°C	°F	°C	°F	°C	°F	°C	°F	°C	°F	C	°F	° C	°F
-80	-112.0	-20	-4.0	5	41.0	30	86.0	55	131.0	80	176.0	105	221.0	130	266.0	200	392
-70	-94.0	-19	-2.2	6	42.8	31	87.8	56	132.8	81	177.8	106	222.8	131	267.8	210	410
-60	-65.0	-18	-0.4	7	44.6	32	89.6	57	134.6	82	179.6	107	224.6	132	269.6	220	428
-50	-58	-17	+1.4	8	46.4	33	91.4	58	136.4	83	181.4	108	226.4	133	271.4	230	446
-45	-49.1	-16	3.2	9	48.2	34	93.2	59	138.2	84	183.2	109	228.2	134	273.2	240	464
-40	-40.0	-15	5.0	10	50.0	35	95.0	60	140.0	85	185.0	110	230.0	135	275.0	250	482
-39	-38.2	-14	6.8	11	51.8	36	96.8	61	141.8	86	186.8	111	231.8	136	276.8	300	572
-38	-36.4	-13	8.6	12	53.6	37	98.6	62	143.6	87	188.6	112	233.6	137	278.6	350	662
-37	-34.6	-12	10.4	13	55.4	38	100.4	63	145.4	88	189.4	113	235.4	138	280.4	400	752
-36	32.8	-11	12.2	14	57.2	39	102.2	64	147.2	89	192.2	114	237.2	139	282.2	500	932
-35	-31.0	-10	14.0	15	59.0	40	104.0	65	149.0	90	194.0	115	239.0	140	284.0	600	1112
-34	29.2	-9	15.8	16	60.8	41	105.8	66	150.8	91	195.8	116	240.8	141	285.8	700	1292
-33	-27.4	-8	17.6	17	62.6	42	107.6	67	152.6	92	197.6	117	242.6	142	287.6	800	1472
-32	-25.6	-7	19.4	18	64.4	43	109.4	68	154.4	93	199.4	118	244.4	143	289.4	900	1652
-31	-23.8	-6	21.2	19	66.2	44	111.2	69	156.2	94	201.2	119	246.2	144	291.2	1000	1832
-30	-22.0	-5	23.0	20	68.0	45	113.0	70	158.0	95	203.0	120	248.0	145	293.0	1100	2012
-29	-22.0	-4	24.8	21	69.8	46	114.8	71	159.8	96	204.8	121	249.8	146	294.8	1200	2192
-28	-18.4	-3	26.6	22	71.6	47	116.8	72	161.6	97	206.6	122	251.6	147	296.6	1300	2372
-27	-16.6	-2	28.4	23	73.4	48	118.4	73	163.4	98	208.4	123	253.4	148	298.4	1400	2552
-26	-14.8	-1	30.2	24	75.2	49	120.2	74	165.2	99	210.2	124	255.2	149	300.2	1500	2732
-25	-13.0	0	32.0	25	77.0	50	122.0	75	167.0	100	212.0	125	257.0	150	302.0	1600	2912
-24	-11.2	1	33.8	26	78.8	51	123.8	76	168.8	101	213.8	126	258.8	160	320.0	1700	3092
-23	-9.4	2	35.6	27	80.6	52	125.6	77	170.6	102	215.6	127	260.6	170	338.0	1800	3272
-22	-7.6	3	37.4	28	82.4	53	127.4	78	172.4	103	217.4	128	262.4	180	356.0	1900	3452
-21	-5.8	4	39.2	29	84.2	54	129.2	79	174.2	104	219.2	129	264.2	190	374.0	2000	3632

Conversion Formula °F = 9/5°C + 32° °C = 5/9(°F-32°)

Terms and Conditions

TITLE - Title to the products of ALTECH shall remain with ALTECH until payment is made in full by Customer. Such reservation of title is for the purpose of securing the purchase price and shall not relieve Customer of the duty to inspect the products upon receipt, to notify ALTECH of any deficiencies or defects, and to exercise due care in the use, installation, operation, and maintenance of the products when on the premise of the Customer or under the control of the Customer. Notwithstanding any reservation of title by ALTECH, risk of loss shall pass to customer at any time of shipment.

SHIPMENT AND DELIVERY - All orders for destination in the mainland United States (less Hawaii, Alaska and non-continental United States possessions) will be shipped F.O.B. Flemington, N.J. All destination, shipping and other charges shall be paid by the Customer in accordance with ALTECH's then current shipping and billing practices.

Delivery dates given in the acceptance of any order are approximate. ALTECH shall not be liable for delays in delivery or in performance due to causes beyond its reasonable control including acts of God, acts of Customer, acts of civil or military authority, fires, strikes or other labor disturbances, war, riot or delays in transportation. In the event of such delay, the date of delivery or performance shall be extended for a period equal to the time lost by reason of the delay.

PRICE - PRICES in any ALTECH publication are subject to change without prior notification. Catalog prices are based on prices published in the current price list. All written quotations are valid for thirty (30) days from the date of quotation. Customer shall pay all sales, use, excise or similar taxes whenever ALTECH must itself pay and/or collect such tax from Customer arising out of the sale.

PAYMENT - Customer agrees to make payment within thirty (30) days of date of the invoice from ALTECH. Customer agrees to pay a late payment charge of one and one-half percent (1.5% per month, or the maximum late payment charge permitted by applicable law, whichever is less, on any unpaid amount for each calendar month (or fraction thereof) that such payment is in default. Orders amounting to less than $100.00 will be billed at $100.00 plus freight. Full carton purchases are required. In the event of referral to an attorney for collection, reasonable attorney's fees for collection of the overdue amount shall be paid by Customer. In the event payment is not received within 30 days from the date of invoice, any discount shall be cancelled and the full list price will be due.

LIMITED WARRANTY - ALTECH warrants to Customer that the equipment purchases shall be free from defects in material and workmanship under normal use and service for a period of one year from shipment.

Written notice as an explanation of the circumstances of any claim that the equipment has proved defective in material or workmanship shall be given promptly by the Customer to ALTECH.

ALTECH will not be liable for any misuse, improper operations, improper installation, improper maintenance, alteration, modification, accident or unusual degradation of the equipment or parts due to an unsuitable installation environment.

No representation of other affirmation of facts, including but not limited to statements regarding capacity, suitability for use or performance of the equipment, shall be or be deemed to be a warranty or representation by ALTECH for any purpose, nor give rise to any liability or obligation of ALTECH whatsoever.

Customer's sole and exclusive remedy in the event of breach of warranty, as set forth herein, is expressly limited to (1) the correction of the defect by adjustment, repair, modification, or replacement, or (2) issuance of a credit or refund of the purchase price for the defective equipment at ALTECH's election and sole expense.

EXCEPT AS SPECIFICALLY PROVIDED IN THIS AGREEMENT, THERE ARE NO OTHER WARRANTIES EXPRESSED OR IMPLIED INCLUDING BUT NOT LIMITED TO ANY IMPLIED WARRANTIES OR MERCHANTABILITY OR FITNESS FOR A PARTICULAR PURPOSE.

THIS WARRANTY EXTENDS ONLY TO THE CUSTOMER FROM ALTECH OR ITS AUTHORIZED DISTRIBUTOR.

LIMITATION OF LIABILITY - IN NO EVENT, SHALL ALTECH BE LIABLE FOR LOSS OF PROFITS, INDIRECT, SPECIAL, CONSEQUENTIAL OR OTHER SIMILAR DAMAGES ARISING OUT OF ANY BREACH OF THIS AGREEMENT OR OBLIGATIONS UNDER THE AGREEMENT.

ALTECH SHALL NOT BE LIABLE FOR ANY DAMAGES CAUSED BY DELAY IN SHIPMENT, INSTALLATION OR FURNISHING OF EQUIPMENT OR SERVICES UNDER THIS AGREEMENT.

No action arising out of any claimed breach of this Agreement may be brought by either party more than two (2) years after the cause of action has accrued.

PATENT INDEMNITY - ALTECH shall defend or settle any suit or proceeding brought against Customer based on a claim that any equipment made to ALTECH design and furnished hereunder constitutes an infringement of any existing United States patent, provided (ALTECH) is notified promptly in writing and is given complete authorization and information required for the defense, and ALTECH shall pay all damages and costs awarded against Customer, but shall not be responsible for any costs, expense or compromise incurred or made by Customer without ALTECH's prior written consent. If any equipment is in ALTECH's opinion likely to or does become the subject of a claim for patent infringement, ALTECH may at its option and expense procure for Customer the right to continue using the device, modify it to become non-infringing, but in the event ALTECH is not reasonably able to modify, substitute, or otherwise procure for Customer the right to continue using it, ALTECH will remove such equipment and refund to Customer the amount paid in excess of a reasonable rental for past use.

ALTECH shall not be liable for any infringement or claim based upon use of the equipment in combination with other equipment not supplied by ALTECH or with modifications made by Customer.

The foregoing states the entire liability of ALTECH to Customer arising from patent infringement.

SELLER'S REMEDIES - Should Customer fail to make any payment within ten (10) days of its due date, or fail to perform any other of the Customer's obligation hereunder upon thirty (30) days written notice, or should Customer be or become insolvent or be a party to any bankruptcy receivership proceeding prior to full payment of all amounts payable hereunder, ALTECH may: (a) with or without demand or notice to customer declare the entire amount unpaid immediately due and payable; (b) enter upon the premises where the equipment may be found and remove it (Customer shall assemble the equipment and make it available to ALTECH at a place reasonably convenient to both parties and shall permit and assist ALTECH in effecting the retaking and removal of the equipment); and (c) sell any or all the equipment as permitted under applicable law, applying the proceeds of the sale to payment of the expenses of retaking, repairing and selling the equipment, reasonable attorney fees and to the satisfaction of all indebtedness then due and unpaid under this Agreement. Any surplus shall be paid to Customer and any deficiency shall be paid to ALTECH by Customer.

The remedies provided herein shall be cumulative and in addition to all other remedies provided by law or equity or under the Uniform Commercial Code.

GOVERNING LAW - This agreement will be governed by the Laws of the State of New Jersey.

GENERAL - This Agreement shall only become effective and binding when either (a) it has been accepted and executed by an authorized representative of ALTECH, or (b) the equipment has been shipped to Customer, with or without acceptance in writing hereon. Notice of acceptance is hereby waived by Customer. Customer hereby acknowledges receipt of a true and complete copy hereof.

No addition to or modification of any of the Terms and Conditions of Sale as they appear herein shall be binding upon ALTECH unless signed in writing by duly authorized representative of ALTECH in Flemington, N.J.

Typographical and clerical errors in quotations, orders and acknowledgments are subject to correction.

This Agreement is not assignable without the prior written consent of ALTECH. Any attempt to assign any of the rights, duties or obligations of this Agreement without such consent is void.

If any provision or provisions of this Agreement shall be held to be invalid, illegal or unenforceable, the validity, legality and enforceability, of the remaining provisions shall not in any way be affected or impaired thereby.

ALTECH is not responsible for failure to fulfill its obligation under this Agreement due to causes beyond its control, or except as agreed herein.

THE CUSTOMER ACKNOWLEDGES THAT HE HAS READ THE AGREEMENT, UNDERSTANDS IT, AND AGREES TO BE BOUND BY ITS TERMS AND CONDITIONS. FURTHERMORE, THE CUSTOMER AGREES THAT IT IS THE COMPLETE AND EXCLUSIVE STATEMENT OF THE AGREEMENT BETWEEN THE PARTIES, WHICH SUPERSEDES ALL PROPOSALS OR PRIOR AGREEMENTS, ORAL OR WRITTEN, EXPRESSED OR IMPLIED, AND ALL OTHER COMMUNICATIONS BETWEEN THE PARTIES RELATING TO THE SUBJECT MATTER OF THIS AGREEMENT.

Altech Corp.® • 35 Royal Road • Flemington, NJ 08822-6000 • Phone (908)806-9400 • FAX (908)806-9490 • www.altechcorp.com

Here are other great products available from Altech!

Circuit Protection Devices



Altech the market leader in UL508 Manual Motor Controllers/ Miniature Circuit Breakers now introduces UL489 Miniature Circuit Breakers and UL1077 Supplementary Protectors. The UL489 versions are DIN rail mounted, 17.5mm wide, thermal magnetic, 240V, 480Y/277V AC, 50/60Hz, 125 and 250 VDC models, with short circuit interrupt capacity of 10kA, a positive trip indicator, and are line/load reversible. The UL1077 versions are DIN rail mounted, 17.5mm wide, thermal magnetic, 480Y/277V AC, 50/60Hz, a short circuit withstand capacity 10kA, have a positive trip indicator.

Altech Corp.®
35 Royal Rd., Flemington, NJ 08822
908-806-9400
FAX 908-806-9490
www.altechcorp.com

Interface Modules and Power Supplies

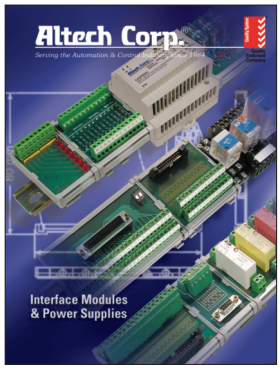

Altech offers a wide range of DIN Rail or panel mount cable interface modules, relay interface modules, power supplies, carrier modules, and custom designed modules. Cable to connector models include: D-Sub connectors, ribbon cable connectors, and Dip socket connectors to terminals. Standard relay modules from 1 to 16 channels, and safety relay modules from 1 to 16 channels and up to 10 poles are included. The catalog also contains switching power supplies, linear power supplies, and custom designed interface modules.

Altech Corp.®
35 Royal Rd., Flemington, NJ 08822
908-806-9400
FAX 908-806-9490
www.altechcorp.com

Contactors and More!



Altech's now carries contactors, mini contactors, definite purpose contactors & overload relays. The contactors come in 3 and 4 pole configurations at 9A to 800A. Available in Single Phase (115 -230V) and Three Phase (200 - 575V) AC and DC models. A large variety of coil voltages are supported and the accessories are auxiliary contacts and overload relays. The mini contactors come in screw clamp, fast-on, cage clamp and solder pin types.

Altech Corp.®
35 Royal Rd., Flemington, NJ 08822
908-806-9400
www.altechcorp.com

Terminal Blocks



Altech offers a NEW Terminal Block catalog with the most competitively priced blocks in the industry. We feature screw and spring clamp models for DIN rail and panel mount applications. This advanced line of wire termination products will increase your design options and help to get the job done more efficiently. Our line of blocks include feed-through (single, double or triple level), distribution, ground, fuse, disconnect, thermocouple, surge suppressor and indicator. A wide variety of accessories, tools and ferrules are available.

Altech Corp.®
35 Royal Rd., Flemington, NJ 08822
908-806-9400
FAX 908-806-9490
www.altechcorp.com

Industrial Enclosures



Altech's expanded line of TK Industrial Enclosures, with metric knockouts, is here. Now our entire line of industrial enclosures is in metric. Metric knockouts align with international standards making selection easier and more universal. Plus the PG standard is still available. All of Altech's enclosures are internationally accepted and stand up to the harshest environments. They protect against dust, water and corrosion while enhancing the value of your product. Rated up to IP66 (NEMA type 4x), Altech enclosures are available in a wide range of sizes.

Altech Corp.®
35 Royal Rd., Flemington, NJ 08822
908-806-9400
www.altechcorp.com

Liquid Tight Strain Reliefs



This 64-page catalog introduces Altech's full line Liquid Tight Strain Reliefs (Cord Grips) which are used to seal cable entries, keep contaminant's from entering enclosures, provide strain relief and thus reduce stress on components and termination points inside enclosures. Available in standard, high-performance, and economy versions, functions include Straight-Through, Increased Strain Relief, Bend Protection, Pull/Bend Protection, Multi-conductor, Flat Cable and EMI/RFI. They can be used with almost any type of cable, cord or conductor - solid, stranded, flat, shielded, high temperature, etc.

Altech Corp.®
35 Royal Rd., Flemington, NJ 08822
908-806-9400
FAX 908-806-9490
www.altechcorp.com

DIN Rail Power Supplies



Altech DIN RAIL mountable power supplies have Universal AC input. They are suitable for industrial and automation applications.

- UL508 Listed
- Installed on DIN rail TS35/ 7.5 or 15
- Available from 30-960W
- Protections: Short circuit / Overload / Over-voltage / Over temperature
- Cooling by free air convection
- Worldwide approvals
- 3 year warranty

Altech Corp.®
35 Royal Rd., Flemington, NJ 08822
908-806-9400
FAX 908-806-9490
www.altechcorp.com

Motor Disconnect Switches



Altech's line of Motor Disconnect Switches are UL 508 listed as Manual Motor Controllers for AC Motor Starting Across-the-line and AC General use. This new 16 page catalog includes the 3 different handle designs, which are all available in gray/black or yellow/red housings. Electrical ratings are 25-150A / 600V. The switches are non-fused DIN Rail mountable. Neat features include: snap-on auxiliary switches, door mounting kit and a retrofit 30A fuse holder. Also featured are Enclosed Motor Disconnect Switches & Fused Enclosed Motor Disconnect Switch (30A) in plastic or stainless housings.

Altech Corp.®
35 Royal Rd., Flemington, NJ 08822
908-806-9400
www.altechcorp.com

altechcorp.com



Altech Corporation
35 Royal Road
Flemington, NJ 08822-6000
P 908.806.9400 • F 908.806.9490
www.altechcorp.com

Altech Corp.® 255-052013-3M
Printed July 2013