22mm LED Metal Pilot Lights

E225660

Certified for
NEMA Type 4X
12 environment.

Pilot Light

with bulb, bulb holder and mounting bracket

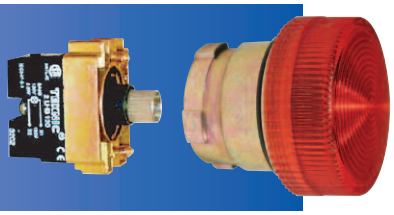

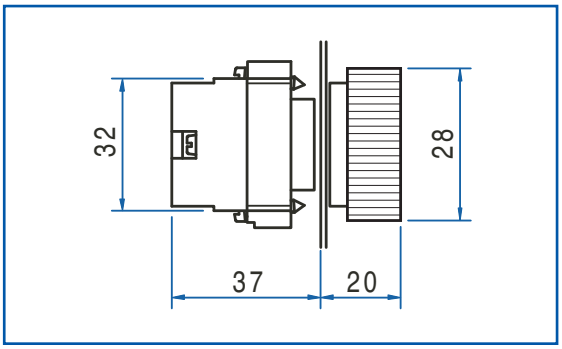



Replacement bulbs available.
See page 39.

Color	Voltage	Cat No.
12V AC/DC		
White	12V AC/DC	2PLB1LB-012
Green	12V AC/DC	2PLB3LB-012
Red	12V AC/DC	2PLB4LB-012
Amber	12V AC/DC	2PLB5LB-012
Blue	12V AC/DC	2PLB6LB-012
Clear	12V AC/DC	2PLB7LB-012
Yelllow	12V AC/DC	2PLB8LB-012
24V AC/DC		
White	24V AC/DC	2PLB1LB-024
Green	24V AC/DC	2PLB3LB-024
Red	24V AC/DC	2PLB4LB-024
Amber	24V AC/DC	2PLB5LB-024
Blue	24V AC/DC	2PLB6LB-024
Clear	24V AC/DC	2PLB7LB-024
Yelllow	24V AC/DC	2PLB8LB-024
48V AC/DC		
White	48V AC/DC	2PLB1LB-048
Green	48V AC/DC	2PLB3LB-048
Red	48V AC/DC	2PLB4LB-048
Amber	48V AC/DC	2PLB5LB-048
Blue	48V AC/DC	2PLB6LB-048
Clear	48V AC/DC	2PLB7LB-048
Yelllow	48V AC/DC	2PLB8LB-048
110V AC		
White	110V AC	2PLB1LB-110
Green	110V AC	2PLB3LB-110
Red	110V AC	2PLB4LB-110
Amber	110V AC	2PLB5LB-110
Blue	110V AC	2PLB6LB-110
Clear	110V AC	2PLB7LB-110
Yelllow	110V AC	2PLB8LB-110
110V DC		
White	110V DC	2PLB1LB-110D
Green	110V DC	2PLB3LB-110D
Red	110V DC	2PLB4LB-110D
Amber	110V DC	2PLB5LB-110D
Blue	110V DC	2PLB6LB-110D
Clear	110V DC	2PLB7LB-110D
Yelllow	110V DC	2PLB8LB-110D
230V AC		
White	230V AC	2PLB1LB-230
Green	230V AC	2PLB3LB-230
Red	230V AC	2PLB4LB-230
Amber	230V AC	2PLB5LB-230
Blue	230V AC	2PLB6LB-230
Clear	230V AC	2PLB7LB-230
Yelllow	230V AC	2PLB8LB-230
230V DC		
White	230V DC	2PLB1LB-230D
Green	230V DC	2PLB3LB-230D
Red	230V DC	2PLB4LB-230D
Amber	230V DC	2PLB5LB-230D
Blue	230V DC	2PLB6LB-230D
Clear	230V DC	2PLB7LB-230D
Yelllow	230V DC	2PLB8LB-230D

Altech Corp.® • 35 Royal Road • Flemington, NJ 08822-6000 • Phone (908)806-9400 • FAX (908)806-9490 • www.altechcorp.com

22mm Specifications

Electrical and Mechanical Characteristics

Standard conformity:	IEC 60947-5-1
Approvals:	VDE0660 CSA - C22.2 No. 14-95 UL508 IEC 947 - 5 (1) 1990, IS 13947 ASTA UK certified as per IEC 947 - 5 - (1) 1990
Degree of protection:	IP 65 as per IEC 529 NEMA Type 4X, 12 as per UL50
Temperature Range:	- 25°C to + 70°C (-13°F to +158°F)

Contact Block

Rated voltage:	600V AC /DC
Rated current:	10A AC / 2.5A DC
Contact operation:	self-wiping, slow break NO or NC
UL508 rating (pilot duty): CSA - C22.2 No. 14-95:	 A600: 10A; 600V AC Q600: 2.5A; 600V DC
Make and break capacity IEC 947 - 5 - (1) 1990:	 AC 15 4A, 415V AC DC 13 0.5A, 110V DC
Terminal capacity:	minimum 20 AWG (0.5 mm^2) maximum 2x16 AWG (2 x 1.5 mm^2) or 14 AWG (2.5 mm^2)
Terminal marking:	1-2 for NC, 3-4 for NO
Short circuit protection:	10A cartridge fuse HRC type, rated for resistive loads
Mechanical life:	1 million operations

Modules for Pilot Lights & Illuminated Switches with LED Bulbs

Current consumption (applicable to all colors)	
24 VAC/DC, 100 VAC & 240 VAC:	max. 20 mA
110 VDC:	max. 15 mA
220 VDC:	max. 10 mA
Service life (at nominal voltage and at ambient temperature of 25°C):	100,000 hours
Voltage limits (nominal voltage):	<20% of rated voltage>
Short circuit protection:	on specific request
Terminal capacity:	min. 1 x 0.5 mm^2 (20 AWG), max. 2 x 1.5 mm^2 (2x16 AWG) or 1 x 2.5 mm^2 (1x14 AWG)

Torque Specifications

Mounting bracket screws	1.2 Nm (10.8 lbs. in.)
Contact block to bracket screws	0.5 Nm (4.5 lbs. in.)
Terminal screws (wiring)	0.8 Nm (7.2 lbs. in.)