Altech Corp.® by BERNSTEIN

SR Series - Safety Rope Pull Switches



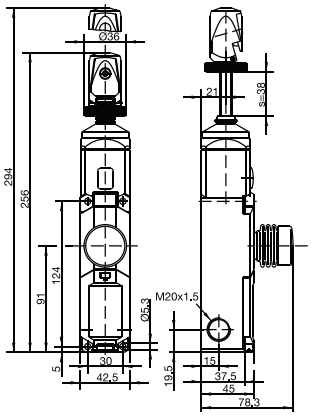

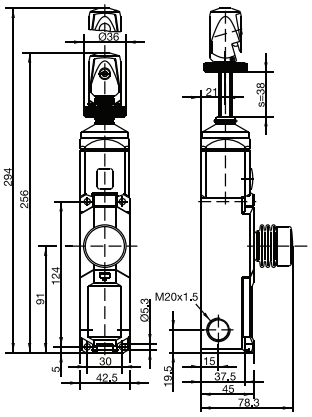

Max. span length	Quick Fix with E-Stop & Reset		Quick Fix with Reset Only	
	2 NC / 2 NO	4 NO	2 NC / 2 NO	4 NC
82 Ft. (25 Meters)	**601.1629.067** SR-U2Z-NA-QF-100-L0-0-0 Replaces **601.1629.031** SR-U2Z-NA-QF 100	**601.1691.077** SR-A4Z-NA-QF-100-L0-0-0 Replaces **601.1691.052** SR-A4Z-NA-QF 100	**601.1629.070** SR-U2Z-0-QF-100-L0-0-0 Replaces **601.1629.032** SR-U2Z-QF 100	**601.1691.080** SR-A4Z-0-QF-100-L0-0-0 Replaces **601.1691.049** SR-A4Z-QF 100
123 Ft. (37.5 Meters)	**601.1629.068** SR-U2Z-NA-QF-175-L0-0-0 Replaces **601.1629.027** SR-U2Z-NA-QF 175	**601.1691.078** SR-A4Z-NA-QF -175-L0-0-0 Replaces **601.1691.053** SR-A4Z-NA-QF 175	**601.1629.071** SR-U2Z-0-QF-175-L0-0-0 Replaces **601.1629.024** SR-U2Z-QF 175	**601.1691.081** SR-A4Z-0-QF-175-L0-0-0 Replaces **601.1691.050** SR-A4Z-QF 175
246 Ft. (75 Meters)	**601.1629.069** SR-U2Z-NA-QF-300-L0-0-0 Replaces **601.1629.019** SR-U2Z-NA-QF 300	**601.1691.079** SR-A4Z-NA-QF-300-L0-0-0 Replaces **601.1691.054** SR-A4Z-NA-QF 300	**601.1629.072** SR-U2Z--0-QF-300-L0-0-0 Replaces **601.1629.028** SR-U2Z-QF 300	**601.1691.082** SR-A4Z-0-QF-300-L0-0-0 Replaces **601.1691.051** SR-A4Z-QF 300
Approvals	c SP us BG		c SP us BG	

Technical data

Electrical data		
Rated insulation voltage	U_i max.	250 V AC
Rated operating voltage	U_e max.	240 V
Conventional thermal current	I_{the}	10 A
Utilization category	U_e / I_e	AC-15, U_e / I_e 240 V / 3 A
Short-circuit protection		6 A gL/gG
Protection class		II, Insulated
Mechanical data		
Enclosure	PA 6 GV (UL94-V0)	
Ambient temperature	-25°C to +70°C	
Mechanical service life	100,000 Cycles	
Switching frequency max.	≤ 20 / min.	
Mounting	4 x M5	
B10d	10,000	
Type of connection	Cage clamp terminal	
Conductor cross sections	≤ 1.5 - 2 mm²	
Cable entry	3 x M20 x 1.5	
Protection class	IP67 conforming to IEC/EN 60529	
Standards		
VDE 0660 T100, DIN EN 60947-1, IEC 60947-1 VDE 0660 T200, DIN EN 60947-5-1, IEC 60947-5-1 VDE 0660 T210, DIN EN 60947-5-5, IEC 60947-5-5 ISO 13850		

Drawing dimensions in mm