Altech Corp.®

Serving the Automation & Control Industry since 1984

Certified System ™
ISO 9001
QMI-SAI Global



Mechanical Thermostat

Panel Lights

Panel Filters

Altech Panel Accessories

LED Panel Light APL-Series

- Energy efficient LED technology
- Long life
- Universal Supply Voltage 24-265V AC/DC
- Universal Mounting (magnet or screws)
- Daisy chain
- Maintenance-free
- On/off switch or motion sensor



E358386

Technical Details

Supply Voltage	24-265V AC/DC, 50/60Hz
Power Consumption	4W
Luminosity	290Lm at 120° 870Lm at 360° (equals 75W light bulb)
LED Type	Angle of radiation 120°, light color: daylight, color temperature: 6500k
Life Expectancy	40,000h at 68°F (20°C)
Connection	Wieland Connector
Housing	PC clear (TOP), PC ABS blue (base)
Operating Temperature	-22° to 140°F (-30°C to 60°C)
Protection Type / Class	IP20

Panel Lights

Part No.	Operating Voltage	Switch Type	Weight
APL-M24-265V	24-265V AC/DC	motion switch	140g (0.3lbs.)
APL-S24-265V	24-265V AC/DC	manual switch	140g (0.3lbs.)

Drawings

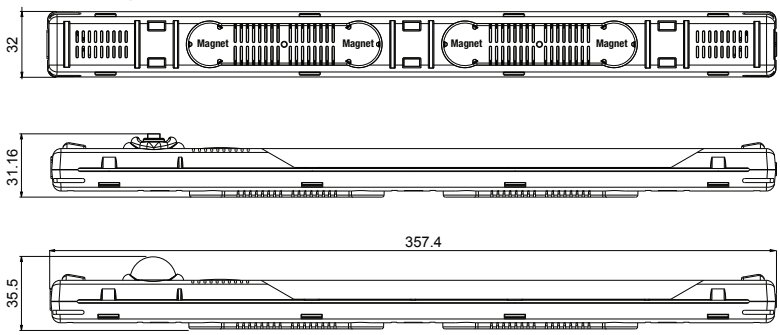

Power cable with female connector



Part No.	Length	Color
APL-PCW	3 m	white cable

Female / Male Connectors



Part No.	Connector Type	Color
APL-CF	Female	White
APL-CM	Male	White

Extension cable with 2 connectors for daisy chain



Part No.	Length	Color
APL-ECW0.5	0.5 m	white
APL-ECW1.0	1.0 m	white

Altech®

Panel Filters

E358385

- Mounts Quickly and Easily - no mounting hardware required
- Low external Profile
- UV & Heat resisting Housing material
- Black or Grey Housing Color
- Filtering Class: G3 according to EN779
- Filtration Efficiency: 85% (DIN24185)
- Filter Mat included



Exhaust Grills

Part No. Grey (RAL7035)	Part No. Black (RAL9005)	Dust Retention Capacity	Cutout Dimensions	Outer Dimensions
AEG-1000G	AEG-1000B	1.96oz/ft²	3.62"x3.62"	4.2"x4.2"x0.9"
AEG-2000G	AEG-2000B	1.96oz/ft²	4.92"x4.92"	5.9"x5.9"x1.1"
AEG-3000G	AEG-3000B	1.96oz/ft²	6.97"x6.97"	8.0"x8.0"x1.2"
AEG-4000G	AEG-4000B	1.96oz/ft²	8.78"x8.78"	9.8"x9.8"x1.3"
AEG-5000G	AEG-5000B	1.96oz/ft²	11.46"x11.46"	12.8"x12.8"x1.3"

Filter Fans I 115VAC*

Part No. Grey (RAL7035)	Part No. Black (RAL7035)	Rated Voltage	Rated Current @ 50/60Hz	Power Usage @ 50/ 60Hz	Max. Airflow	Fan Noise	Static Pressure	Cutout Dimensions
AFF-1010G-120VAC	AFF-1010B-120VAC	115VAC	0.11/ 0.09A	9/ 7W	7/ 9CFM	33dB(A)	0.13inH2O	3.62"x3.62"
AFF-1020G-120VAC	AFF-1020B-120VAC	115VAC	0.15/ 0.13A	12/ 10W	13/ 15CFM	42dB(A)	0.23inH2O	3.62"x3.62"
AFF-2010G-120VAC	AFF-2010B-120VAC	115VAC	0.20/ 0.18A	16/ 15W	26/ 29CFM	49dB(A)	0.33inH2O	4.92"x4.92"
AFF-2020G-120VAC	AFF-2020B-120VAC	115VAC	0/25/ 0.22A	19/ 17W	39/ 46CFM	44dB(A)	0.35inH2O	4.92"x4.92"
AFF-3010G-120VAC	AFF-3010B-120VAC	115VAC	0.21/ 0.20A	19/ 18W	59/ 65CFM	49dB(A)	0.24inH2O	6.97"x6.97"
AFF-3020G-120VAC	AFF-3020B-120VAC	115VAC	0.20/ 0.18A	16/ 15W	65/ 76CFM	44dB(A)	0.40inH2O	6.97"x6.97"
AFF-4010G-120VAC	AFF-4010B-120VAC	115VAC	0.21/ 0.21A	17/ 16W	62/ 70CFM	49dB(A)	0.23inH2O	8.78"x8.78"
AFF-4020G-120VAC	AFF-4020B-120VAC	115VAC	0.28/ 0.26A	31/ 26W	133/ 169CFM	55dB(A)	0.84inH2O	8.78"x8.78"
AFF-5010G-120VAC	AFF-5010B-120VAC	115VAC	0.68/ 0.73A	74/ 83W	306/ 359CFM	69dB(A)	0.78inH2O	11.46"x11.46"

*) 230VAC version available, please contact Altech for availability

Filter Fans I 24VDC

Part No. Grey (RAL7035)	Part No. Black (RAL7035)	Rated Voltage	Rated Current	Power Usage	Max. Airflow	Fan Noise	Static Pressure	Cutout Dimensions
AFF-1010G-24VDC	AFF-1010B-24VDC	24VAC	0.09A	2W	9CFM	30dB(A)	0.11inH2O	3.62"x3.62"
AFF-1020G-24VDC	AFF-1020B-24VDC	24VAC	0.61A	15W	29CFM	59dB(A)	0.64inH2O	3.62"x3.62"
AFF-2010G24VDC	AFF-2010B-24VDC	24VAC	0.31A	7W	27CFM	42dB(A)	0.23inH2O	4.92"x4.92"
AFF-3010G-24VDC	AFF-3010B-24VDC	24VAC	0.34A	8W	60CFM	42dB(A)	0.24inH2O	6.97"x6.97"
AFF-4010G-24VDC	AFF-4010B-24VDC	24VAC	0.32A	8W	82CFM	42dB(A)	0.25inH2O	6.97"x6.97"
AFF-4020G-24VDC	AFF-4020B-24VDC	24VAC	0.71A	17W	132CFM	58dB(A)	0.26inH2O	8.78"x8.78"

Altech®

Mechanical Thermostats

The APT Altech Mechanical Panel Thermostats are designed to control the air temperature inside of enclosures and control panels. They can be used for enclosure heaters, cooling equipment (e.g. filter fans), or signal devices.

E358385

- Adjustable Temperature Control
- Wide Adjustment Range
- Color Coded Dial (Red: Heating, Blue: Cooling)
- DIN Rail Mountable





The Heating version (red dial, NC) has closed contacts when the temperature is below the set point value and opens with rising temperature.

The Cooling version (blue dial, NO) has open contacts when the temperature is below the set point value and closes with rising temperature.

Technical Details

Rated Voltage	110 - 250 VAC
Rated Current	10A
Max. Rated Current	15A
Hysteresis	+/-3K
Differential	-3°K NC version / +4°K NO version up to 5A / +7°K NC version > 5A
Lifetime	> 100,000 cycles
Terminal Size Acceptability	23 - 13 AWG (0.75 - 2.5mm²)
Protection Level	IP20
Enclosure Material	PA66, UL94V-0
Weight	1.9oz. (54g)

Mechanical Thermostats

Part No.	Function	Contact	Temperature Scale	Setting Range
APT-HNCF	Heating	NC	Fahrenheit	14 - 176°F
APT-CNOF	Cooling	NO	Fahrenheit	14 - 176°F
APT-HNCC	Heating	NC	Celsius	-10 - 80°C
APT-CNOC	Cooling	NO	Celsius	-10 - 80°C

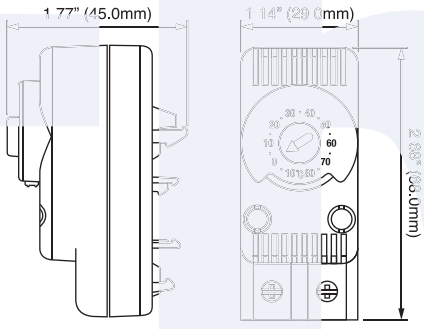

Thermostat Dimensions

Lighting Accessories

Power cable with female connector



Part No.	Length	Volt. Type	Color
APL-PCAC	6.5 ft.	AC	Connector: white; Cable: white
APL-PCDC	6.5 ft.	DC	Connector: blue; Cable: white

Extension cable with 2 connecters for daisy chain



Part No.	Length	Volt. Type	Color
APL-ECAC	3.3 ft.	AC	Connector: white; Cable: white
APL-ECDC	3.3 ft.	DC	Connector: blue; Cable: white

Female / Male Connectors



Part No.	Connector Type	Volt. Type	Color
APL-FAC	Female	AC	White
APL-MAC	Male	AC	White
APL-FDC	Female	DC	Blue
APL-MDC	Male	DC	Blue

Door Limit Switch



APL-SL

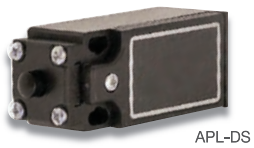

APL-DS

Part No.	Contact	Voltage Rating
APL-DS	NO / NC	24-250 VAC/DC
APL-SL	Slide limit switch (Bar mounting)	

Filter Fan Accessories

Replacement Filter Mats



- Made of washable non-woven synthethic fibers
- Can be cleaned up to 10 times by washing or blowing dry
- Black or Grey Housing Color
- NEMA 12 or NEMA 3R Filter Class available
- Sold in kits of 6pcs

Part No.	Filter Rating	Used with Filter Fan	Used with Exhaust Grill	Dimensions
AFM-1012	NEMA12	AFF-10xx	AEG-1000	3.3"x3.3"
AFM-2012	NEMA12	AFF-20xx	AEG-2000	4.6"x4.6"
AFM-3012	NEMA12	AFF-30xx	AEG-3000	6.6"x6.6"
AFM-4012	NEMA12	AFF-40xx	AEG-4000	8.5"x8.5"
AFM-5012	NEMA12	AFF-50xx	AEG-5000	11.1"x11.1"

altechcorp.com



Altech Corporation
35 Royal Road
Flemington, NJ 08822-6000
P 908.806.9400 • F 908.806.9490
www.altechcorp.com

Altech Corp.® 050-102013-5M
Printed October 2013