One Phase Power Distribution Block

- Quick mounting and wiring
- IP20 Finger Safe
- DIN Rail or Panel Mount
- Blocks fit with other DIN Rail mountable modular devices (height 95mm, depth 44.5mm)
- Accessories increase the number of outputs with only one input (applies **only** to 38041 and 38032)
- No caps to open / remove
- Material
  Housing: Polyamide
  Metal Body: Brass

DB16	38049	DB35	38041
			

Part Number:	DB16*		38049		DB35*		38041	
Approvals	UL File E220514	IEC	UL File E98082	IEC	UL File E220514	IEC	UL File E98082	IEC
Current Rating	80A	80A	80A	80A	115A	125A	115A	125A
Voltage Rating	600V AC	1000V AC	600V AC	690V AC	600V AC	1000V AC	600V AC	690V AC
SCCR	10kA		100kA		10kA		100kA	
No. of Inputs	1	1	1	1	1	1	1	1
Wire Range	8-4 AWG	6-16mm²	8-4 AWG	6-16mm²	8-2 AWG	10-35mm²	8-2 AWG	10-35mm²
Torque	14lb.-in.	1.2Nm	14lb.-in.	1.5Nm	40lb.-in.	6Nm	13.5lb.-in.	3.5Nm
Screw Type	Pozi Drive 2		Pozi Drive 2		Pozi Drive 2		Pozi Drive 2	
No. of Outputs	6	6	6	6	6	6	6	6
Wire Range	(2x)8-4 AWG	(2x)6-16mm²	(2x)8-4 AWG	(2x)6-16mm²	14-6 AWG	2.5-10mm²	14-6 AWG	2.5-16mm²
Torque	14lb.-in.	12Nm	14lb.-in.	1.5Nm	17.5lb.-in.	2Nm	17.5lb.-in.	2Nm
Wire Range	(4x)14-10 AWG	(4x)2.5-6mm²	(4x)14-10 AWG	(4x)2.5-6mm²	8-4 AWG	6-16mm²		
Torque	7lb.-in.	7Nm	7.2lb.-in.	0.8Nm	14lb.-in.	3Nm		
Screw Type	Pozi Drive 2		Pozi Drive 2		Pozi Drive 2		Pozi Drive 2	
Optional Marking Tag **(for DB16 and DB35)	MT2**				MT2**			

Dimensions:

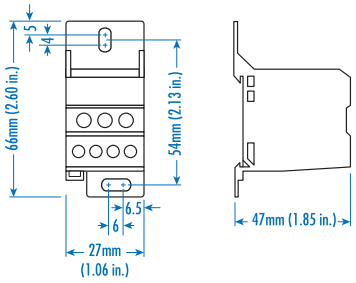

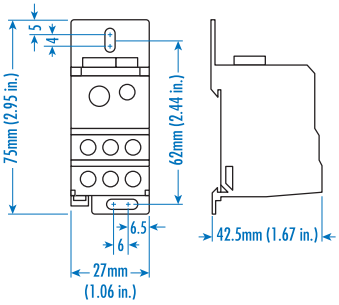

COLOR BLOCKS

(other than standard grey)

When ordering please add color suffix to Cat. No.

Example for color Red: ***Cat.No./R***

Color	Ordering Suffix
Red	R
Yellow	Y
Blue	BU
Green	G

Consult Altech for availability:

Orange	O
Beige	BG
Dark Brown	DB
Black	BL
White	W

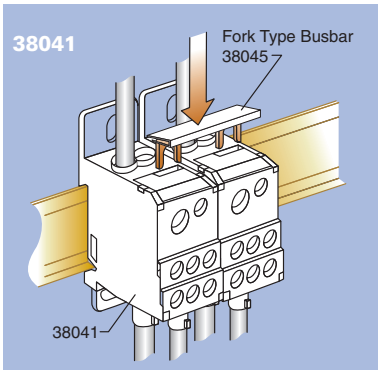

Accessories: Fork Type Busbar
Part No: **38045** to jump 2 Blocks
38046 to jump 8 Blocks
can be cut