Intel® Cyclone® 10 LP Device Overview

Online Version
Send Feedback

C10LP51001

ID: 683879
Version: 2022.05.27

Contents

Intel® Cyclone® 10 LP Device Overview 3
Summary of Intel Cyclone 10 LP Features 4
Intel Cyclone 10 LP Available Options 5
Intel Cyclone 10 LP Maximum Resources 6
Intel Cyclone 10 LP Package Plan 6
Intel Cyclone 10 LP I/O Vertical Migration 7
Logic Elements and Logic Array Blocks 7
Embedded Multipliers 8
Embedded Memory Blocks 8
Clocking and PLL 8
FPGA General Purpose I/O 9
Configuration 9
Power Management 10
Document Revision History for Intel Cyclone 10 LP Device Overview 10

683879 | 2022.05.27

Send Feedback

Intel® Cyclone® 10 LP Device Overview

The Intel® Intel Cyclone® 10 LP FPGAs are optimized for low cost and low static power, making them ideal for high-volume and cost-sensitive applications.

Intel Cyclone 10 LP devices provide a high density sea of programmable gates, on-board resources, and general purpose I/Os. These resources satisfies the requirements of I/O expansion and chip-to-chip interfacing. The Intel Cyclone 10 LP architecture suits smart and connected end applications across many market segments:

- Industrial and automotive
- Broadcast, wireline, and wireless
- Compute and storage
- Government, military, and aerospace
- Medical, consumer, and smart energy

The free but powerful Intel Quartus® Prime Lite Edition software suite of design tools meets the requirements of several classes of users:

- Existing FPGA designers
- Embedded designers using the FPGA with Nios® II processor
- Students and hobbyists who are new to FPGA

Advanced users who require access to the full IP Base Suite can subscribe to the Intel Quartus Prime Standard Edition or purchase the license separately.

Related Information

- Software Development Tools, Nios II Processor
  Provides more information about the Nios II 32-bit soft IP processor and Embedded Design Suite (EDS).
- Intel Quartus Prime IP Base Suite
- Intel Quartus Prime Editions

Intel Corporation. All rights reserved. Intel, the Intel logo, and other Intel marks are trademarks of Intel Corporation or its subsidiaries. Intel warrants performance of its FPGA and semiconductor products to current specifications in accordance with Intel's standard warranty, but reserves the right to make changes to any products and services at any time without notice. Intel assumes no responsibility or liability arising out of the application or use of any information, product, or service described herein except as expressly agreed to in writing by Intel. Intel customers are advised to obtain the latest version of device specifications before relying on any published information and before placing orders for products or services.
*Other names and brands may be claimed as the property of others.

ISO 9001:2015 Registered

Summary of Intel Cyclone 10 LP Features

Table 1. Summary of Features for Intel Cyclone 10 LP Devices

Feature	Description
Technology	• Low-cost, low-power FPGA fabric • 1.0 V and 1.2 V core voltage options • Available in commercial, industrial, and automotive temperature grades
Packaging	• Several package types and footprints: — FineLine BGA (FBGA) — Enhanced Thin Quad Flat Pack (EQFP) — Ultra FineLine BGA (UBGA) — Micro FineLine BGA (MBGA) • Multiple device densities with pin migration capability • RoHS6 compliance
Core architecture	• Logic elements (LEs)—four-input look-up table (LUT) and register • Abundant routing/metal interconnect between all LEs
Internal memory blocks	• M9K—9-kilobits (Kb) of embedded SRAM memory blocks, cascadable • Configurable as RAM (single-port, simple dual port, or true dual port), FIFO buffers, or ROM
Embedded multiplier blocks	• One 18 × 18 or two 9 × 9 multiplier modes, cascadable • Complete suite of DSP IPs for algorithmic acceleration
Clock networks	• Global clocks that drive throughout entire device, feeding all device quadrants • Up to 15 dedicated clock pins that can drive up to 20 global clocks
Phase-locked loops (PLLs)	• Up to four general purpose PLLs • Provides robust clock management and synthesis
General-purpose I/Os (GPIOs)	• Multiple I/O standards support • Programmable I/O features • True LVDS and emulated LVDS transmitters and receivers • On-chip termination (OCT)
SEU mitigation	SEU detection during configuration and operation
Configuration	• Active serial (AS), passive serial (PS), fast passive parallel (FPP) • JTAG configuration scheme • Configuration data decompression • Remote system upgrade

Intel Cyclone 10 LP Available Options

Figure 1. Sample Ordering Code and Available Options for Intel Cyclone 10 LP Devices —Preliminary

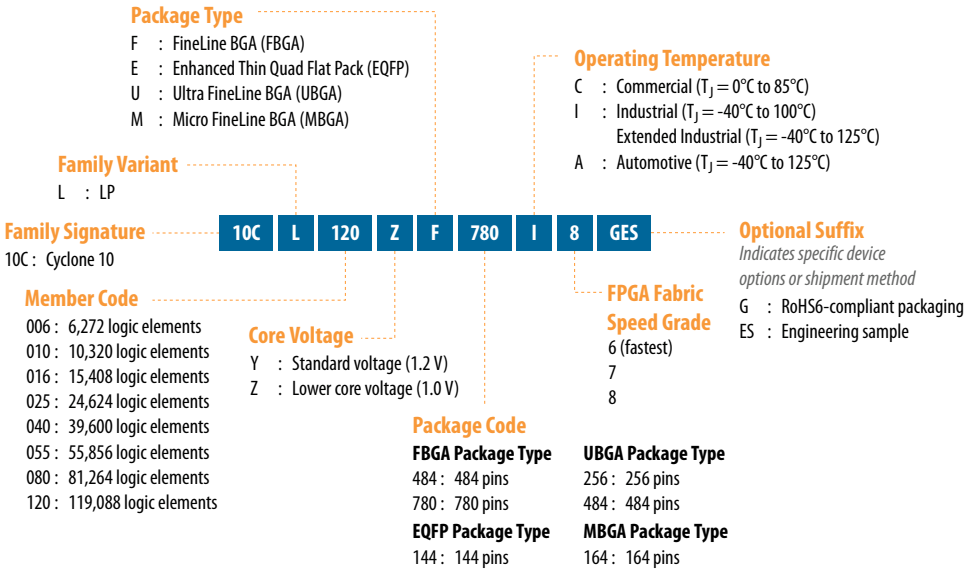

Related Information

Extended Temperature Device Support
Lists the ordering part number of devices that support the extended industrial operating temperature, the devices' operational speed grade, and Intel Quartus Prime option to set for performing timing analysis at the extended junction temperature range.

Intel Cyclone 10 LP Maximum Resources

Table 2. Maximum Resource Counts for Intel Cyclone 10 LP Devices

Resource		Device							
		10CL006	10CL010	10CL016	10CL025	10CL040	10CL055	10CL080	10CL120
Logic Elements (LE)		6,272	10,320	15,408	24,624	39,600	55,856	81,264	119,088
M9K Memory	Block	30	46	56	66	126	260	305	432
	Capacity (Kb)	270	414	504	594	1,134	2,340	2,745	3,888
18 × 18 Multiplier		15	23	56	66	126	156	244	288
PLL		2	2	4	4	4	4	4	4
Clock		20	20	20	20	20	20	20	20
Maximum I/O		176	176	340	150	325	321	423	525
Maximum LVDS		65	65	137	52	124	132	178	230

Intel Cyclone 10 LP Package Plan

Table 3. Package Plan for Intel Cyclone 10 LP Devices

The GPIO counts do not include the DCLK pins. The LVDS counts include DIFFIO and DIFFCLK pairs only—LVDS I/Os with both p and n pins. Refer to the related information.

Device	Package											
	Type	M164 164-pin MBGA		U256 256-pin UBGA		U484 484-pin UBGA		E144 144-pin EQFP		F484 484-pin FBGA		F780 780-pin FBGA	
	Size	8 mm × 8 mm		14 mm × 14 mm		19 mm × 19 mm		22 mm × 22 mm		23 mm × 23 mm		29 mm × 29 mm	
	Ball Pitch	0.5 mm		0.8 mm		0.8 mm		0.5 mm		1.0 mm		1.0 mm	
	I/O Type	GPIO	LVDS	GPIO	LVDS	GPIO	LVDS	GPIO	LVDS	GPIO	LVDS	GPIO	LVDS
10CL006		—	—	176	65	—	—	88	22	—	—	—	—
10CL010		101	26	176	65	—	—	88	22	—	—	—	—
10CL016		87	22	162	53	340	137	78	19	340	137	—	—
10CL025		—	—	150	52	—	—	76	18	—	—	—	—
10CL040		—	—	—	—	325	124	—	—	325	124	—	—
10CL055		—	—	—	—	321	132	—	—	321	132	—	—
10CL080		—	—	—	—	289	110	—	—	289	110	423	178
10CL120		—	—	—	—	—	—	—	—	277	103	525	230

Related Information

- Why does the Intel Quartus Prime software device pin-out show a different number of pins compared to the Intel Cyclone 10 LP Device Overview?
- How is the LVDS pair count that is published in the Intel Cyclone 10 LP Device Overview calculated?

Intel Cyclone 10 LP I/O Vertical Migration

Figure 2. Migration Capability Across Intel Cyclone 10 LP Devices

- The arrows indicate the migration paths. The devices included in each vertical migration path are shaded. Devices with lesser I/O resources in the same path have lighter shades.
- To achieve full I/O migration across devices in the same migration path, restrict I/O usage to match the device with the lowest I/O count.

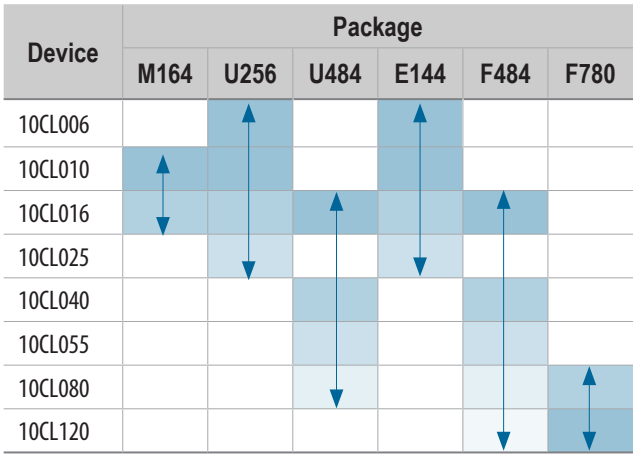

Note: To verify the pin migration compatibility, use the Pin Migration View window in the Intel Quartus Prime software Pin Planner.

Logic Elements and Logic Array Blocks

The LAB consists of 16 logic elements (LE) and a LAB-wide control block. An LE is the smallest unit of logic in the Intel Cyclone 10 LP device architecture. Each LE has four inputs, a four-input look-up table (LUT), a register, and output logic. The four-input LUT is a function generator that can implement any function with four variables.

Figure 3. Intel Cyclone 10 LP Device Family LEs

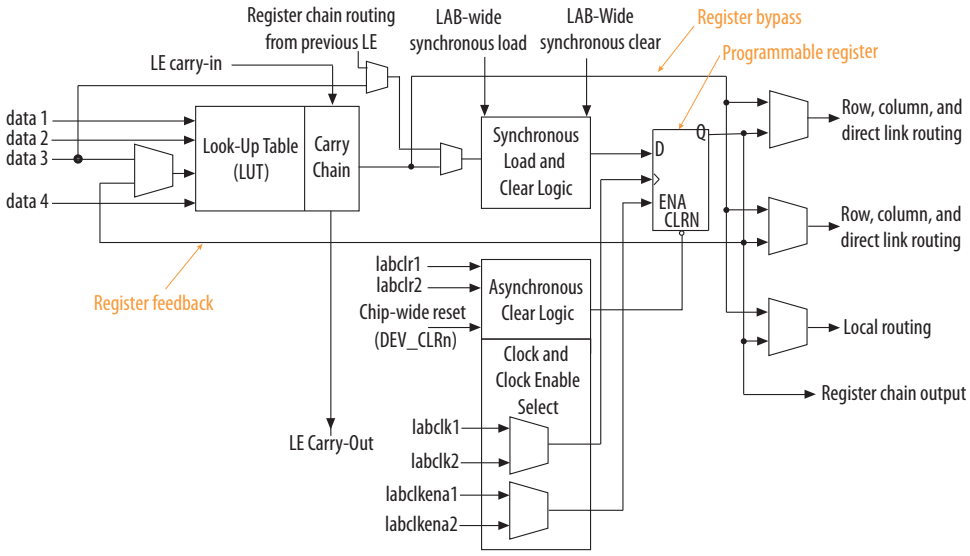

Embedded Multipliers

Each embedded multiplier block in Intel Cyclone 10 LP devices supports one individual 18 × 18-bit multiplier or two individual 9 × 9-bit multipliers. You can cascade the multiplier blocks to form wider or deeper logic structures.

You can control the operation of the embedded multiplier blocks using the following options:

- Parameterize the relevant IP cores with the Intel Quartus Prime parameter editor
- Infer the multipliers directly with VHDL or Verilog HDL

Intel and partners offer popular DSP IPs for Intel Cyclone 10 LP devices, including:

- Finite impulse response (FIR)
- Fast Fourier transform (FFT)
- Numerically controlled oscillator (NCO) functions

For a streamlined DSP design flow, the DSP Builder tool integrates the Intel Quartus Prime software with MathWorks Simulink and MATLAB design environments.

Embedded Memory Blocks

The embedded memory structure consists of M9K memory blocks columns. Each M9K memory block of a Intel Cyclone 10 LP device provides 9 Kb of on-chip memory. You can cascade the memory blocks to form wider or deeper logic structures.

You can configure the M9K memory blocks as RAM, FIFO buffers, or ROM.

Table 4. M9K Operation Modes and Port Widths

Operation Modes	Port Widths
Single port	×1, ×2, ×4, ×8, ×9, ×16, ×18, ×32, and ×36
Simple dual port	×1, ×2, ×4, ×8, ×9, ×16, ×18, ×32, and ×36
True dual port	×1, ×2, ×4, ×8, ×9, ×16, and ×18

Clocking and PLL

Intel Cyclone 10 LP devices feature global clock (GCLK) networks, dedicated clock pins, and general purpose PLLs.

- Up to 20 GCLK networks that drive throughout the device
- Up to 15 dedicated clock pins
- Up to four general purpose PLLs with five outputs per PLL

The PLLs provide robust clock management and synthesis for the Intel Cyclone 10 LP device. You can dynamically reconfigure the PLLs in user mode to change the clock phase or frequency.

FPGA General Purpose I/O

Intel Cyclone 10 LP devices offer highly configurable GPIOs with these features:

- Support for over 20 popular single-ended and differential I/O standards.
- Programmable bus hold, pull-up resistors, delay, and drive strength.
- Programmable slew rate control to optimize signal integrity.
- Calibrated on-chip series termination (R_S OCT) or driver impedance matching (R_S) for single-endd I/O standards.
- True and emulated LVDS buffers with LVDS SERDES implemented using logic elements in the device core.
- Hot socketing support.

Configuration

Intel Cyclone 10 LP devices use SRAM cells to store configuration data. Configuration data is downloaded to the Intel Cyclone 10 LP device each time the device powers up.

You can use EPCS or EPCQ (AS x1) flash configuration devices to store configuration data and configure the Intel Cyclone 10 LP FPGAs.

- Intel Cyclone 10 LP devices support 1.5 V, 1.8 V, 2.5 V, 3.0 V, and 3.3 V programming voltages and several configuration schemes.
- The single-event upset (SEU) mitigation feature detects cyclic redundancy check (CRC) errors automatically during configuration and optionally during user mode(1).

Table 5. Configuration Schemes and Features Supported by Intel Cyclone 10 LP Devices

Configuration Scheme	Configuration Method	Decompression	Remote System Upgrade
Active serial (AS)	Serial configuration device	Yes	Yes
Passive serial (PS)	External host with flash memory	Yes	Yes
	Download cable	Yes	—
Fast passive parallel (FPP)	External host with flash memory	—	Yes
JTAG	External host with flash memory	—	—
	Download cable	—	—

Related Information

Configuration Devices
Provides more information about the EPCS and EPCQ configuration devices.

(1) User mode error detection is not supported on 1.0 V core voltage Intel Cyclone 10 LP device variants.

Power Management

Intel Cyclone 10 LP devices are built on optimized low-power process:

- Available in two core voltage options: 1.2 V and 1.0 V
- Hot socketing compliant without needing external components or special design requirements

Document Revision History for Intel Cyclone 10 LP Device Overview

Document Version	Changes
2022.05.27	Removed instances of Enpirion from the *Power Management* section.
2020.05.21	At the package plan table, added description and related information links that explain how the GPIO and LVDS pins are counted.
2019.12.30	Added related information link to the *Extended Temperature Device Support* page that provides a list of devices that support the extended temperature range, their operational speed grade, and related Intel Quartus Prime settings for timing analysis.

Date	Version	Changes
May 2017	2017.05.08	Initial release.