10-Gbps Ethernet MAC MegaCore Function

User Guide

101 Innovation Drive
San Jose, CA 95134
www.altera.com

UG-01083-3.4

Document last updated for Altera Complete Design Suite version: 14.0
Document publication date: August 2014

Feedback Subscribe

Copyright © 2014 Altera Corporation. All rights reserved. Altera, The Programmable Solutions Company, the stylized Altera logo, and specific device designations are trademarks and/or service marks of Altera Corporation in the U.S. and other countries. All other words and logos identified as trademarks and/or service marks are the property of Altera Corporation or their respective owners. Altera products are protected under numerous U.S. and foreign patents and pending applications, maskwork rights, and copyrights. Altera warrants performance of its semiconductor products to current specifications in accordance with Altera's standard warranty, but reserves the right to make changes to any products and services at any time without notice. Altera assumes no responsibility or liability arising out of the application or use of any information, product, or service described herein except as expressly agreed to in writing by Altera. Altera customers are advised to obtain the latest version of device specifications before relying on any published information and before placing orders for products or services.

QUALITY
ISO 9001:2008
NSAI Certified

Contents

Chapter 1. About This IP Core

1.1. Features . . . 1–1
1.2. Release Information . . . 1–2
1.3. Device Family Support . . . 1–3
1.4. IP Core Verification . . . 1–3
1.4.1. Simulation Environment . . . 1–3
1.4.2. Compatibility Testing Environment . . . 1–4
1.5. Performance and Resource Utilization . . . 1–4

Chapter 2. Getting Started with Altera IP Cores

2.1. Introduction to Altera IP Cores . . . 2–1
2.2. Installing and Licensing IP Cores . . . 2–1
2.2.1. OpenCore Plus IP Evaluation . . . 2–2
2.3. IP Catalog and Parameter Editor . . . 2–2
2.4. Using the Parameter Editor . . . 2–3
2.5. Customizing and Generating IP Cores . . . 2–4
2.6. Specifying the Parameters . . . 2–5
2.7. Upgrading Outdated IP Cores . . . 2–5
2.8. Simulating IP Cores . . . 2–6
2.9. 10GbE MAC Parameter Settings . . . 2–8

Chapter 3. 10GbE MAC Design Examples

3.1. Software and Hardware Requirements . . . 3–1
3.2. 10GbE Design Example Components . . . 3–2
3.2.0.1. Ethernet Loopback Module . . . 3–3
3.2.0.2. Base Addresses . . . 3–4
3.3. 10GbE Design Example Files . . . 3–5
3.4. Creating a New 10GbE Design . . . 3–6
3.5. 10GbE Design Example Parameter Settings . . . 3–8
3.6. 10GbE Testbenches . . . 3–8
3.6.1. 10GbE Testbench . . . 3–8
3.6.2. 10GbE Testbench Component . . . 3–9
3.6.3. 10GbE Testbench Files . . . 3–9
3.6.4. 10GbE Testbench Simulation Flow . . . 3–11
3.6.5. Simulating the 10GbE Testbench with the ModelSim Simulator . . . 3–11
3.6.6. Enabling Local Loopback . . . 3–12
3.6.7. 10GbE Simulation Timing Diagrams . . . 3–13
3.7. 10GbE Design Example Compilation and Verification in Hardware . . . 3–15
3.7.1. Compiling the 10GbE Design . . . 3–15
3.7.2. Verifying the 10GbE Design in Hardware . . . 3–17
3.7.3. Debugging . . . 3–17
3.7.4. 10GbE Design Transmit and Receive Latencies . . . 3–18
3.7.5. 10GbE Design Performance and Resource Utilization . . . 3–19

Chapter 4. 10GbE MAC with IEEE1588v2 Design Example

4.1. Software Requirements . . . 4–1
4.2. 10GbE with IEEE 1588v2 Design Example Components . . . 4–2
4.2.1. Base Addresses . . . 4–3

4.3. 10GbE with IEEE 1588v2 Design Example Files 4–4
4.4. Creating a New 10GbE with IEEE 1588v2 Design 4–4
4.5. 10GbE with IEEE 1588v2 Testbench 4–5
4.5.1. 10GbE with IEEE 1588v2 Testbench 4–5
4.5.2. 10GbE with IEEE 1588v2 Testbench Components 4–5
4.5.3. 10GbE with IEEE 1588v2 Testbench Files 4–6
4.5.4. 10GbE with IEEE 1588v2 Testbench Simulation Flow 4–6
4.5.5. Simulating 10GbE with IEEE 1588v2 Testbench with ModelSim Simulator 4–7

Chapter 5. 1G/10GbE MAC Design Example
5.1. Software and Hardware Requirements 5–1
5.2. 1G/10GbE Design Example Components 5–2
5.2.1. Reconfiguration Bundle Parameters 5–4
5.2.2. Base Addresses 5–4
5.3. 1G/10GbE Design Example Files 5–5
5.4. Creating a New 1G/10GbE Design 5–6
5.5. 1G/10GbE Testbench 5–6
5.5.1. 1G/10GbE Testbench 5–6
5.5.2. 1G/10GbE Testbench Components 5–7
5.5.3. 1G/10GbE Testbench Files 5–7
5.5.4. 1G/10GbE Testbench Simulation Flow 5–9
5.5.4.1. 1G/10Gb Ethernet Mode 5–9
5.5.4.2. Backplane-KR Mode 5–10
5.5.5. Simulating the 1G/10GbE Testbench with the ModelSim Simulator 5–10
5.5.6. 1G/10GbE Simulation Timing Diagrams 5–12
5.6. 1G/10GbE Design Example Compilation 5–13
5.6.1. Compiling the 1G/10GbE Design 5–13
5.6.2. 1G/10GbE Design Performance and Resource Utilization 5–14

Chapter 6. 10M-10GbE MAC with IEEE 1588v2 Design Example
6.1. Software and Hardware Requirements 6–1
6.2. 10M-10GbE MAC with IEEE 1588v2 Design Example Components 6–1
6.2.1. Base Addresses 6–3
6.3. 10M-10GbE MAC with IEEE 1588v2 Design Example Files 6–3
6.4. Creating a New 10M-10GbE MAC with IEEE 1588v2 Design 6–4
6.5. 10M-10GbE with IEEE 1588v2 Testbench 6–4
6.5.1. 10M-10GbE with IEEE 1588v2 Testbench 6–5
6.5.2. 10M-10GbE with IEEE 1588v2 Testbench Components 6–5
6.5.3. 10M-10GbE MAC with IEEE 1588v2 Testbench Files 6–6
6.5.4. 10M-10GbE MAC with IEEE 1588v2 Testbench Simulation Flow 6–7
6.5.5. Simulating 10M-10GbE MAC with IEEE 1588v2 Testbench with ModelSim Simulator 6–7

Chapter 7. Functional Description
7.1. Architecture 7–1
7.2. Interfaces 7–3
7.2.1. Avalon-ST Interface 7–3
7.2.2. SDR XGMII 7–4
7.2.3. GMII 7–4
7.2.4. MII 7–4
7.2.5. Avalon-MM Control and Status Register Interface 7–4
7.3. Frame Types 7–5
7.4. Transmit Datapath 7–5
7.4.1. Frame Payload Padding 7–5

7.4.2. Address Insertion . . . 7–6
7.4.3. Frame Check Sequence (CRC-32) Insertion . . . 7–6
7.4.4. XGMII Encapsulation . . . 7–8
7.4.5. Inter-Packet Gap Generation and Insertion . . . 7–9
7.4.6. SDR XGMII Transmission . . . 7–9
7.4.7. Unidirectional Feature . . . 7–10
7.5. Receive Datapath . . . 7–12
7.5.1. Minimum Inter-Packet Gap . . . 7–12
7.5.2. XGMII Decapsulation . . . 7–12
7.5.3. Frame Check Sequence (CRC-32) Checking . . . 7–13
7.5.4. Address Checking . . . 7–13
7.5.5. Frame Type Checking . . . 7–13
7.5.6. Length Checking . . . 7–14
7.5.7. CRC-32 and Pad Removal . . . 7–15
7.5.8. Overflow Handling . . . 7–16
7.6. Transmit and Receive Latencies . . . 7–16
7.7. Congestion and Flow Control . . . 7–17
7.7.1. IEEE 802.3 Flow Control . . . 7–17
7.7.1.1. Pause Frame Reception . . . 7–18
7.7.1.2. Pause Frame Transmission . . . 7–18
7.7.2. Priority-Based Flow Control . . . 7–20
7.7.2.1. PFC Frame Reception . . . 7–20
7.7.2.2. PFC Frame Transmission . . . 7–21
7.8. Error Handling (Link Fault) . . . 7–21
7.9. IEEE 1588v2 . . . 7–22
7.9.1. Architecture . . . 7–24
7.9.2. Transmit Datapath . . . 7–24
7.9.3. Receive Datapath . . . 7–25
7.9.4. Frame Format . . . 7–26
7.9.4.1. PTP Packet in IEEE 802.3 . . . 7–26
7.9.4.2. PTP Packet over UDP/IPv4 . . . 7–27
7.9.4.3. PTP Packet over UDP/IPv6 . . . 7–28

Chapter 8. Registers

8.1. MAC Registers . . . 8–2
8.1.1. Rx_frame_control Register . . . 8–16
8.1.2. Rx_pfc_control Register . . . 8–17
8.2. MAC Registers for IEEE 1588v2 Feature . . . 8–18
8.2.1. Configuring PMA Analog and Digital Delay . . . 8–19
8.3. Register Initialization . . . 8–20

Chapter 9. Interface Signals

9.0.1. Clock and Reset Signals . . . 9–2
9.0.2. Avalon-ST Transmit and Receive Interface Signals . . . 9–2
9.0.2.1. Timing Diagrams—Avalon-ST Transmit Interface . . . 9–3
9.0.2.2. Timing Diagrams—Avalon-ST Receive Interface . . . 9–6
9.0.3. SDR XGMII . . . 9–8
9.0.3.1. Timing Diagrams—SDR XGMII . . . 9–9
9.0.4. GMII Signals . . . 9–11
9.0.5. MII Signals . . . 9–11
9.0.6. Unidirectional Signals . . . 9–12
9.0.7. Avalon-MM Programming Interface Signals . . . 9–12
9.0.8. Avalon-ST Status and Pause Interface Signals . . . 9–13

9.0.9. 10M-10GbE MAC Speed Control Signal . . . 9–20
9.0.10. IEEE 1588v2 Interface Signals . . . 9–20
9.0.10.1. IEEE 1588v2 Timestamp Interface Signals . . . 9–20
9.0.10.2. ToD Clock Interface Signals . . . 9–25
9.0.10.3. Path Delay Interface Signals . . . 9–25
9.0.10.4. Timing Diagrams—IEEE 1588v2 Timestamp . . . 9–27

Chapter 10. Design Considerations
10.1. SDR XGMII to DDR XGMII Conversion . . . 10–1
10.1.1. ALTDDIO_IN Megafunction Configuration . . . 10–1
10.1.2. ALTDDIO_OUT Megafunction Configuration . . . 10–1
10.2. 10GbE MAC and PHY Connection with XGMII . . . 10–2
10.3. Sharing TX and RX Clocks for Multi-Port System Design . . . 10–2
10.4. Sharing Reference Clocks for Multi-Port System Design . . . 10–2

Appendix A. Frame Format
A.1. Ethernet Frame . . . A–1
A.2. VLAN and Stacked VLAN Tagged MAC Frame . . . A–2
A.3. Pause Frame . . . A–3
A.4. Priority-Based Flow Control Frame . . . A–4

Appendix B. Time-of-Day (ToD) Clock
B.1. Features . . . B–1
B.2. Device Family Support . . . B–1
B.3. Performance and Resource Utilization . . . B–1
B.4. Parameter Setting . . . B–2
B.5. ToD Clock Interface Signals . . . B–2
B.5.1. Avalon-MM Control Interface Signal . . . B–3
B.5.2. Avalon-ST Transmit Interface Signal . . . B–3
B.6. ToD Clock Configuration Register Space . . . B–4
B.6.1. Adjusting ToD's Drift . . . B–5

Appendix C. Packet Classifier
C.1. Block Diagram . . . C–1
C.2. Packet Classifier Signals . . . C–2
C.2.1. Common Clock and Reset Signals . . . C–2
C.2.2. Avalon-ST Interface Signals . . . C–2
C.2.3. Ingress Control Signals . . . C–3
C.2.4. Control Insert Signals . . . C–4
C.2.5. Timestamp Field Location Signals . . . C–4

Appendix D. ToD Synchronizer
D.1. Device Family Support . . . D–1
D.2. Block Diagram . . . D–2
D.3. ToD Synchronizer Parameter Settings . . . D–3
D.4. ToD Synchronizer Signals . . . D–4
D.4.1. Common Clock and Reset Signals . . . D–4
D.4.2. Interface Signals . . . D–4

Additional Information
Document Revision History . . . Info–1
How to Contact Altera . . . Info–4
Typographic Conventions . . . Info–4

The 10-Gbps Ethernet (10GbE) Media Access Controller (MAC) IP core is a configurable component that implements the IEEE 802.3-2008 specification. The IP core offers the following modes:

- 10 Gbps mode—uses the Avalon® Streaming (Avalon-ST) interface on the client side and the single data rate (SDR) XGMII on the network side.
- 1 Gbps/10 Gbps mode— uses the Avalon-ST interface on the client side and GMII/SDR XGMII on the network side.
- 10 Mbps/100 Mbps/1 Gbps/10 Gbps (10M-10G) mode—uses the Avalon-ST interface on the client side and MII/GMII/SDR XGMII on the network side.

To build a complete Ethernet subsystem in an Altera® device and connect it to an external device, you can use the 10GbE MAC IP core with an Altera PHY IP core such as a soft XAUI PHY in FPGA fabric, hard silicon-integrated XAUI PHY, a 10GBASE-R PHY, a Backplane Ethernet 10GBASE-KR PHY, or a 1G/10 Gbps Ethernet PHY IP.

Figure 1–1 illustrates a system with the 10GbE MAC IP core.

Figure 1–1. Typical Application of 10GbE MAC

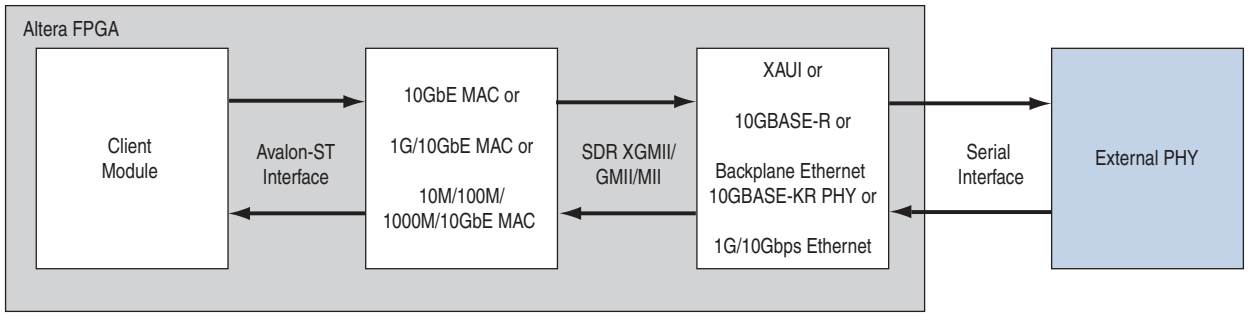

1.1. Features

The 10GbE MAC supports the following features:

- Operating modes: 10 Mbps, 100 Mbps, 1 Gbps and 10 Gbps.
- Support for full duplex only.
- Avalon-ST 64-bit wide client interface running at 156.25 MHz.
- Direct interface to 4-bit MII running at 125 MHZ with clock enable; 2.5 MHz for 10 Mbps and 25 MHz for 100 Mbps.
- Direct interface to 8-bit GMII running at 125 MHZ.
- Direct interface to 64-bit SDR XGMII running at 156.25 MHZ.
- Virtual local area network (VLAN) and stacked VLAN tagged frames filtering as specified by IEEE 802.IQ and 802.1ad (Q-in-Q) standards respectively.

- Optional cyclic redundancy code (CRC)-32 computation and insertion on the transmit datapath; CRC checking on the receive datapath with optional forwarding of the frame check sequence (FCS) field to the client application.
- Checking of receive frames for FCS error, undersized and oversized frames, and payload length error.
- Deficit idle counter (DIC) for optimized performance with average inter-packet gap (IPG) of 12 bytes for LAN applications.
- Optional statistics collection on the transmit and receive datapaths.
- Packets termination when the transmit datapath receives incomplete packets.
- Programmable maximum length of transmit and receive frames up to 64 Kbytes (KB).
- Programmable promiscuous (transparent) mode.
- Optional Ethernet flow control and priority-based flow control (PFC) using pause frames with programmable pause quanta. The PFC supports up to 8 priority queues.
- Optional padding termination on the receive datapath and insertion on the transmit datapath.
- Design examples with optional loopback and testbench for design verification.
- Optional preamble passthrough mode on the transmit and receive datapaths. The preamble passthrough mode allows you to define the preamble in the client frame.
- Programmable datapath option to allow separate instantiation of MAC TX block, MAC RX block, or both MAC TX and MAC RX blocks.
- Optional IEEE 1588v2 feature for the following configurations:
  - 10GbE MAC with 10GBASE-R PHY MegaCore function
  - 1G/10GbE MAC with Backplane Ethernet 10GBASE-KR PHY MegaCore function
  - Multi-speed 10M-10GbE MAC with Backplane Ethernet 10GBASE-KR PHY MegaCore function

1.2. Release Information

Table 1–1 lists information about this release of the 10GbE MAC IP core.

Table 1–1. Release Information

Item	Description
Version	14.0
Release Date	June 2014
Ordering Code	IP-10GETHMAC
Product ID	ID 00D9
Vendor ID	6AF7

1.3. Device Family Support

For new additions and enhancements to the latest Quartus II software and Altera IP, refer to the What's New for Altera IP page of the Altera website.

For a list of IP support for all device families, refer to the All Intellectual Property page of the Altera website.

Table 1–2 shows the devices supported by the different configurations.

Table 1–2. Device Family Support for Configurations

Configuration	Arria V GT	Arria V GZ	Stratix V
Multi-Speed 10M-10GbE MAC	—	✓	✓
Multi-Speed 10M-10GbE MAC with IEEE 1588v2	—	✓	✓
10GbE MAC with 10GBASE-R PHY	✓	✓	✓
10GbE MAC with 10GBASE-R PHY and IEEE 1588v2	✓ *(1)*	✓	✓
Multi-Speed 10M-10GbE MAC with Backplane Ethernet 10GBASE-KR PHY	—	✓	✓
Multi-Speed 10M-10GbE MAC with Backplane Ethernet 10GBASE-KR PHY and IEEE 1588v2	—	—	—
Multi-Speed 10M-10GbE MAC with 1G/10Gbps Ethernet PHY	—	✓	✓
Multi-Speed 10M-10GbE MAC with 1G/10Gbps Ethernet PHY and IEEE 1588v2	—	✓	✓

Note for Table 1–2:

(1) Supports only Arria V GT devices with speed grade of 3_H3.

1.4. IP Core Verification

To ensure compliance with the IEEE specification, Altera performs extensive validation of the 10GbE MAC IP core. Validation includes both simulation and hardware testing.

1.4.1. Simulation Environment

Altera performs the following tests in the simulation environment:

- Directed tests that test all types and sizes of transaction layer packets and all bits of the configuration space.
- Error injection tests that inject errors in the link, transaction layer packets, and data link layer packets, and check for the proper response from the IP core.
- Random tests that test a wide range of traffic patterns across one or more virtual channels.

1.4.2. Compatibility Testing Environment

Altera has performed significant hardware testing of the 10GbE MAC IP core to ensure a reliable solution. The IP core has been tested with the following devices:

- Arria V, Stratix IV, and Stratix V
- Soft XAUI PHY
- Soft and hard 10GBASE-R PHY
- Hard Backplane Ethernet 10GBASE-KR PHY
- 1G/10Gbps Ethernet PHY

The IP core has passed all interoperability tests conducted by the UNH. In addition, Altera internally tests every release with the Spirent Ethernet and 10G testers.

1.5. Performance and Resource Utilization

Table 1–3 provides the estimated performance and resource utilization of the 10GbE MAC for the Cyclone IV device family. The estimates are obtained by compiling the 10GbE MAC with the Quartus II software targeting a Cyclone IV (EP4CGX110DF31C7) device with speed grade –7.



To achieve your timing requirement in Quartus II, Altera recommends that you use multiple seeds in the Design Space Explorer to find the optimal Fitter settings for your design, follow the Timing Optimization Advisor's recommendations, apply the Speed Optimization Technique and use the LogicLock regions.

Table 1–3. Cyclone IV Performance and Resource Utilization

Settings	Logic Elements	Logic Registers	Memory Block (M9K)	f_{MAX} (MHz)
All options disabled	4,424	3,245	2	>156.25
All options enabled with memory-based statistics counters	11,845	8,355	11	>156.25

Table 1–4 provides the estimated performance and resource utilization of the 10GbE MAC for the Stratix IV device family. The estimates are obtained by compiling the 10GbE MAC with the Quartus II software targeting a Stratix IV GX (EP4SGX70HF35C2) device with speed grade –2.

Table 1–4. Stratix IV Performance and Resource Utilization

Settings	Combinational ALUTs	Logic Registers	Memory Block (M9K)	f_{MAX} (MHz)
All options disabled	1,954	3,157	0	>156.25
All options enabled with memory-based statistics counters	5,684	8,349	7	>156.25
All options enabled with register-based statistics counters	8,135	10,117	3	>156.25

Table 1–5 provides the estimated performance and resource utilization of the 10GbE MAC for the Cyclone V device family. The estimates are obtained by compiling the 10GbE MAC with the Quartus II software targeting a Cyclone V GX (5CGXFC7D6F31C6) device with speed grade –6.

Table 1–5. Cyclone V Performance and Resource Utilization

Settings	Combinational ALUTs	Logic Registers	Memory Block (M10K)	f_{MAX} (MHz)
All options disabled	2,322	3,444	2	>156.25
All options enabled with memory-based statistics counters	4,417	5,464	6	>156.25
All options enabled with register-based statistics counters	6,867	7,113	2	>156.25

Table 1–6 provides the estimated performance and resource utilization of the 10GbE MAC for the Stratix V device family. The estimates are obtained by compiling the 10GbE MAC with the Quartus II software targeting a Stratix V GX (5SGXEA7H3F35C3) device with speed grade –3.

Table 1–6. Stratix V Performance and Resource Utilization for 10GbE MAC

Settings	Combinational ALUTs	Dedicated Logic Registers	Memory Block (M20K)	f_{MAX} (MHz)
All options disabled	2,001	3,077	0	>156.25
All options enabled with memory-based statistics counters	5,772	8,197	7	>156.25
All options enabled with register-based statistics counters	8,202	9,965	3	>156.25
IEEE 1588v2 feature enabled with 2-step synchronization ■ Timestamping is enabled ■ ptp_1step is disabled	4,827	5,921	8	>156.25
IEEE 1588v2 feature enabled with 1-step and 2-step synchronization ■ Timestamping is enabled ■ ptp_1step is disabled	6,822	7,926	11	>156.25

Table 1–7 provides the estimated performance and resource utilization of the multi-speed 10M-10GbE MAC for the Stratix V device family. The estimates are obtained by compiling the 10M-10GbE MAC with the Quartus II software targeting a Stratix V GX (5SGXEA7H3F35C3) device with speed grade –3.

Table 1–7. Stratix V Performance and Resource Utilization for 10M-10GbE MAC

Settings	Combinational ALUTs	Dedicated Logic Registers	Memory Block (M20K)	f_{MAX} (MHz)
All options disabled	3,654	4,645	7	>156.25
All options enabled with memory-based statistics counters	4,877	5,797	11	>156.25
All options enabled with register-based statistics counters	7,313	7,544	7	>156.25

2. Getting Started with Altera IP Cores

This chapter provides a general overview of the Altera IP core design flow to help you quickly get started with any Altera IP core.

2.1. Introduction to Altera IP Cores

Altera® and strategic IP partners offer a broad portfolio of off-the-shelf, configurable IP cores optimized for Altera devices. Altera delivers an IP core library with the Quartus® II software. OpenCore Plus IP evaluation enables fast acquisition, evaluation, and hardware testing of all Altera IP cores.

Nearly all complex FPGA designs include optimized logic from IP cores. You can integrate optimized and verified IP cores into your design to shorten design cycles and maximize performance. The Quartus II software includes the Altera IP Library, and supports IP cores from other sources. You can define and generate a custom IP variation to represent complex design logic in your project.

The Altera IP Library provides the following types of IP cores:

- Basic functions
- DSP functions
- Interface protocols
- Memory interfaces and controllers
- Processors and peripherals

For more information about specific IP cores, refer to IP user guide documentation.

2.2. Installing and Licensing IP Cores

The Quartus II software includes the Altera IP Library. The library provides many useful IP core functions for production use without additional license. You can fully evaluate any licensed Altera IP core in simulation and in hardware until you are satisfied with its functionality and performance.

Some Altera IP cores, such as MegaCore® functions, require that you purchase a separate license for production use. After you purchase a license, visit the Self Service Licensing Center to obtain a license number for any Altera product. For additional information, refer to *Altera Software Installation and Licensing*.

Figure 2–1. IP core Installation Path

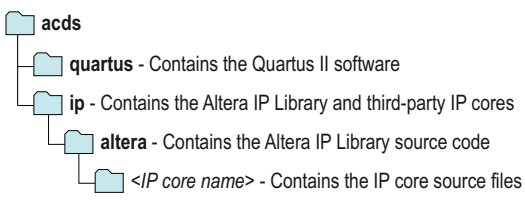

The default installation directory on Windows is **<*drive*>:\altera\<*version number*>**; on Linux it is **<*home directory*>/altera/<*version number*>**.

2.2.1. OpenCore Plus IP Evaluation

Altera's free OpenCore Plus feature allows you to evaluate licensed MegaCore IP cores in simulation and hardware before purchase. You need only purchase a license for MegaCore IP cores if you decide to take your design to production. OpenCore Plus supports the following evaluations:

- Simulate the behavior of a licensed IP core in your system.
- Verify the functionality, size, and speed of the IP core quickly and easily.
- Generate time-limited device programming files for designs that include IP cores.
- Program a device with your IP core and verify your design in hardware.

OpenCore Plus evaluation supports the following two operation modes:

- Untethered—run the design containing the licensed IP for a limited time.
- Tethered—run the design containing the licensed IP for a longer time or indefinitely. This requires a connection between your board and the host computer.

All IP cores using OpenCore Plus in a design time out simultaneously when any IP core times out.

2.3. IP Catalog and Parameter Editor

The Quartus II IP Catalog (**Tools > IP Catalog**) and parameter editor help you easily customize and integrate IP cores into your project. You can use the IP Catalog and parameter editor to select, customize, and generate files representing your custom IP variation.

The IP Catalog automatically displays the IP cores available for your target device. Double-click any IP core name to launch the parameter editor and generate files representing your IP variation. The parameter editor prompts you to specify your IP variation name, optional ports, architecture features, and output file generation options. The parameter editor generates a top-level **.qsys** or **.qip** file representing the IP core in your project. Alternatively, you can define an IP variation without an open Quartus II project. When no project is open, select the **Device Family** directly in IP Catalog to filter IP cores by device.

The IP Catalog is also available in Qsys (**View > IP Catalog**). The Qsys IP Catalog includes exclusive system interconnect, video and image processing, and other system-level IP that are not available in the Quartus II IP Catalog.

Use the following features to help you quickly locate and select an IP core:

- Filter IP Catalog to **Show IP for active device family** or **Show IP for all device families**.
- Search to locate any full or partial IP core name in IP Catalog. Click **Search for Partner IP**, to access partner IP information on the Altera website.

- Right-click an IP core name in IP Catalog to display details about supported devices, installation location, and links to documentation.

Figure 2–2. Quartus II IP Catalog

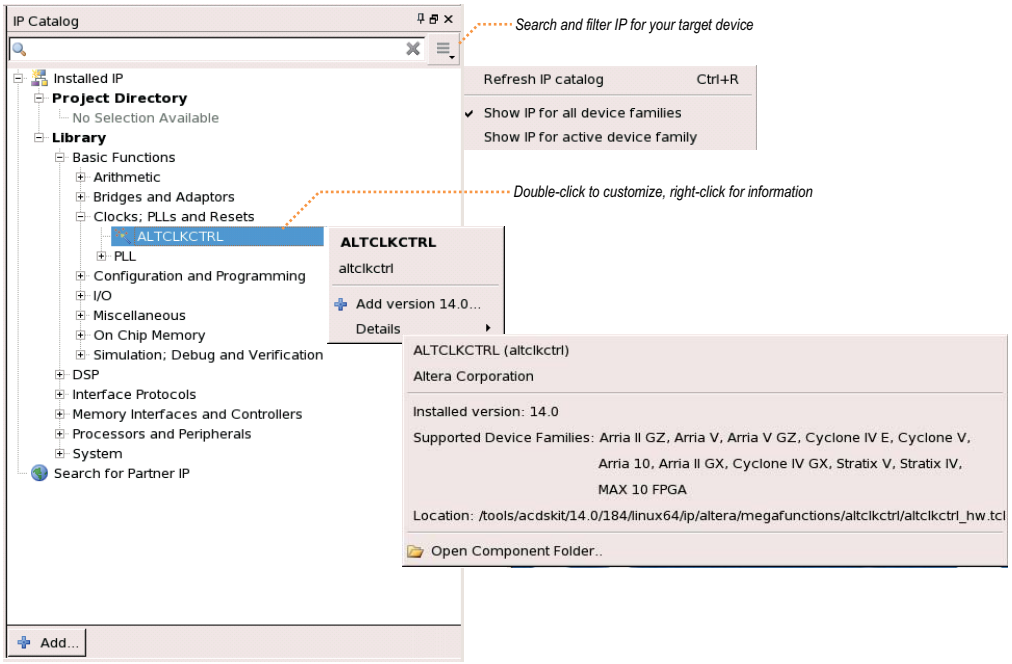

The IP Catalog and parameter editor replace the MegaWizard™ Plug-In Manager in the Quartus II software. The Quartus II software may generate messages that refer to the MegaWizard Plug-In Manager. Substitute "IP Catalog and parameter editor" for "MegaWizard Plug-In Manager" in these messages.

2.4. Using the Parameter Editor

The parameter editor helps you to configure your IP variation ports, parameters, architecture features, and output file generation options:

- Use preset settings in the parameter editor (where provided) to instantly apply preset parameter values for specific applications.
- View port and parameter descriptions and links to detailed documentation.

- Generate testbench systems or example designs (where provided).

Figure 2–3. IP Parameter Editors

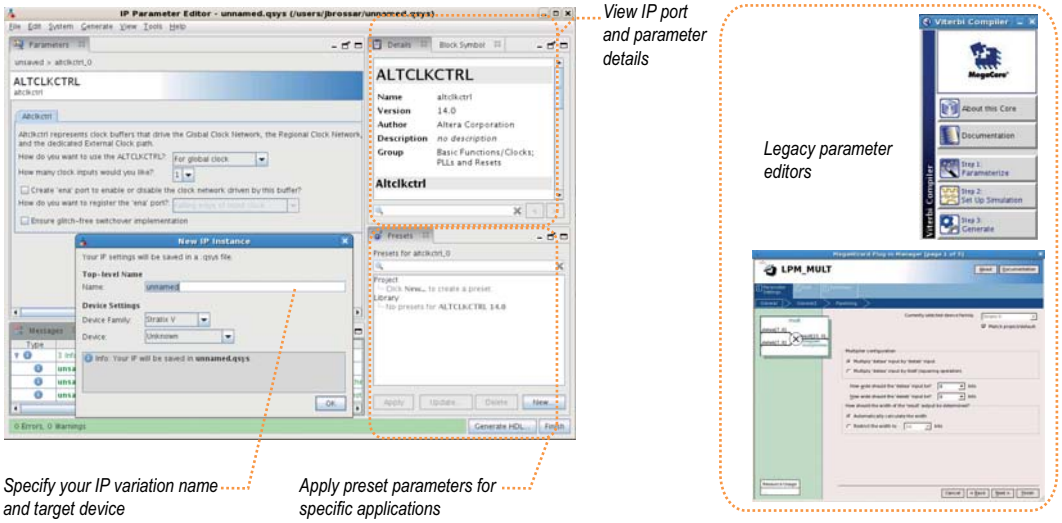

2.5. Customizing and Generating IP Cores

You can customize IP cores to support a wide variety of applications. The Quartus II IP Catalog displays IP cores available for the current target device. The parameter editor guides you to set parameter values for optional ports, features, and output files.

To customize and generate a custom IP core variation, follow these steps:

1. In the IP Catalog (**Tools > IP Catalog**), locate and double-click the name of the IP core to customize. The parameter editor appears.
2. Specify a top-level name for your custom IP variation. This name identifies the IP core variation files in your project. If prompted, also specify the target Altera device family and output file HDL preference. Click **OK**.
3. Specify the desired parameters, output, and options for your IP core variation:
   - Optionally select preset parameter values. Presets specify all initial parameter values for specific applications (where provided).
   - Specify parameters defining the IP core functionality, port configuration, and device-specific features.
   - Specify options for generation of a timing netlist, simulation model, testbench, or example design (where applicable).
   - Specify options for processing the IP core files in other EDA tools.
4. Click **Finish** or **Generate** to generate synthesis and other optional files matching your IP variation specifications. The parameter editor generates the top-level **.qip** or **.qsys** IP variation file and HDL files for synthesis and simulation. Some IP cores also simultaneously generate a testbench or example design for hardware testing.

When you generate the IP variation with a Quartus II project open, the parameter editor automatically adds the IP variation to the project. Alternatively, click **Project > Add/Remove Files in Project** to manually add a top-level **.qip** or **.qsys** IP variation file to a Quartus II project. To fully integrate the IP into the design, make appropriate pin assignments to connect ports. You can define a virtual pin to avoid making specific pin assignments to top-level signals.

2.6. Specifying the Parameters

To specify parameters for your IP core using the Qsys flow, follow these steps:

1. Open an existing Quartus II project or create a new project using the **New Project Wizard** available from the File menu.
2. On the Tools menu, click **Qsys**.
3. On the **Component Library** tab, expand the **Interfaces Protocols** list and then the **Ethernet** list. Double-click **Ethernet 10G MAC** to add it to your system. The relevant parameter editor appears.
4. Specify the required parameters in the Qsys tool. For detailed explanations of these parameters, refer to "10GbE MAC Parameter Settings" on page 2–8.
5. Click **Finish** to complete the IP core instance and add it to the system.

2.7. Upgrading Outdated IP Cores

Altera IP cores have a version number that corresponds with the Quartus II software version. The Quartus II software alerts you when your IP core is outdated with respect to the current Quartus II software version. Click **Project > Upgrade IP Components** to easily identify and upgrade outdated IP cores.

You are prompted to upgrade IP when the new version includes port, parameter, or feature changes. You are also notified if IP is unsupported or cannot be migrated in the current software. Most Altera IP cores support automatic simultaneous upgrade, as indicated in the GUI. IP cores unsupported by auto upgrade require regeneration in the parameter editor.

To upgrade outdated IP cores in your design, follow these steps:

1. In the latest version of the Quartus II software, open the Quartus II project containing an outdated IP core variation.
2. Click **Project > Upgrade IP Components**. The **Upgrade IP Components** dialog box displays all outdated IP cores in your project, along with basic instructions for upgrading each core.
3. Upgrading IP cores changes your original design files. To preserve these original files, click **Project > Archive** and save a project archive preserving your original files.
4. To simultaneously upgrade all IP cores that support automatic upgrade, click **Perform Automatic Upgrade**. The IP variation upgrades to the latest version.

5. To upgrade IP cores unsupported by automatic upgrade, select the IP core in **Upgrade IP Components** dialog box, and then click **Upgrade in Editor.** The parameter editor appears. Click **Finish** or **Generate** to regenerate the IP variation and complete the upgrade. The version number updates when complete.

Figure 2–4. Upgrading Outdated IP Cores

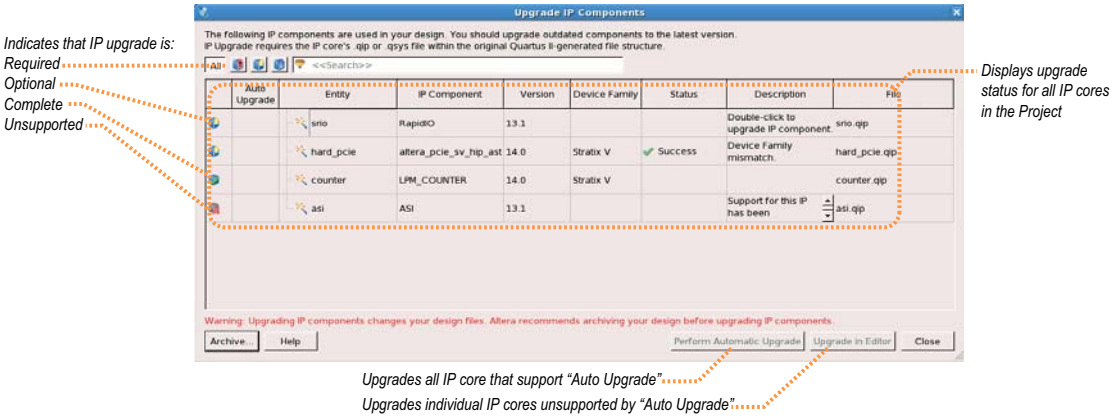

Altera verifies that the current version of the Quartus II software compiles the previous version of each IP core. The *MegaCore IP Library Release Notes and Errata* reports any verification exceptions. Altera does not verify compilation for IP cores older than the previous release.

Alternatively, you can upgrade IP cores at the command line. To upgrade a single IP core:

```
quartus_sh --ip_upgrade -variation_files <variation_file_path> <project>
```

To upgrade a list of IP cores:

```
quartus_sh --ip_upgrade -variation_files
<variation_file_path>;<qsys_file_path>;<variation_file_path> <project>
```

File paths must be relative to the project directory and you must reference the IP variation **.v** or **.vhd** file or **.qsys** file, not the **.qip** file.

2.8. Simulating IP Cores

The Quartus II software supports RTL- and gate-level design simulation of Altera IP cores in supported EDA simulators. Simulation involves setting up your simulator working environment, compiling simulation model libraries, and running your simulation.

You can use the functional simulation model and the testbench or example design generated with your IP core for simulation. The functional simulation model and testbench files are generated in a project subdirectory. This directory may also include scripts to compile and run the testbench. For a complete list of models or libraries required to simulate your IP core, refer to the scripts generated with the testbench. You can use the Quartus II NativeLink feature to automatically generate simulation files and scripts. NativeLink launches your preferred simulator from within the Quartus II software.

You can simulate the 10GbE MAC IP core with the functional simulation model generated by the Quartus II software. To perform a successful simulation of the 10GbE MAC IP core, you are required to compile all files listed in the *<project directory>*/*<variation name>*_**sim** output file. Otherwise, the simulation may fail.



For more information about simulating Altera IP cores, refer to *Simulating Altera Designs* in volume 3 of the *Quartus II Handbook*.

2.9. 10GbE MAC Parameter Settings

You customize the 10GbE MAC by specifying the parameters on the MegaWizard Plug-in Manager, or Qsys in the Quartus II software. Table 2–1 describes the parameters and how they affect the behavior of the IP core.

Table 2–1. 10GbE Parameters

Parameter	Description
Speed	Use this parameter to select the speed options. By default, the **10G MAC** option is selected. Select **Enable 1G/10G MAC** to implement the 10-Gbps and 1-Gbps MAC; select **Enable Multi-Speed 10M-10Gb MAC** to implement the 10-Mbps, 100-Mbps, 1-Gbps, and 10-Gbps MAC.
Enable preamble pass-through mode	Turn on this parameter to enable the preamble passthrough mode. To enable the preamble passthrough mode, you must turn on this parameter and set the `tx_preamble_control`, `rx_lane_decoder_preamble_control`, and `rx_preamble_inserter_control` registers to 1. This parameter is disabled if you selected **Enable 1G/10G MAC**.
Enable priority-based flow control (PFC)	Turn on this parameter to enable PFC. Refer to "Priority-Based Flow Control" on page 7–20 for more information on PFC and its operations.
Number of PFC queues	Indicates the number of PFC priority levels that the 10GbE MAC IP core supports. The valid range is from 2 to 8. This option is enabled only if you turn on the **Priority-based flow control (PFC)** parameter.
Enable unidirectional mode	Turn on this parameter to enable unidirectional mode on transmit path for 10G. This feature only works in 10G speed and in the transmit datapath.
Datapath option	Use this parameter to select the datapath option that determines the MAC variation to instantiate. By default, the **TX & RX** option is selected. The default datapath instantiates the MAC TX and MAC RX blocks. Selecting **TX only** instantiates the MAC TX block; selecting **RX only** instantiates the MAC RX block.
Enable supplementary address	Turn on this parameter to enable supplementary addresses. To enable supplementary addresses, you must turn on this parameter and set the `EN_SUPP0/1/2/3` bits in the `rx_frame_control` register to 1.
Enable CRC on transmit path	Turn on this parameter to calculate and insert CRC on the transmit datapath. To compute and insert CRC on the transmit datapath, you must turn on this parameter and set the `tx_crcins_control`[1] register bit to 1.
Enable statistics collection	Turn on this parameter to collect statistics on the transmit and receive datapaths.
Statistics counters	When you turn on **Statistics collection**, the default implementation of the statistics counters is **Memory-based**. Use **Memory-based** statistics counters to free up the logic elements (the MAC does not clear the statistic counters after the counters are read); **Register-based** statistics counters to free up the memory (the MAC clears the statistic counters after the counters are read). Register-based statistics counters are not supported for Cyclone IV GX devices.
Enable time stamping	Turn on this parameter to enable time stamping on the transmitted and received frames.
Enable PTP 1-step clock support	Turn on this parameter to insert time stamp on PTP messages for 1-step clock based on the TX Egress Timestamp Insert Control interface. This parameter is disabled if you do not turn on **Enable time stamping**.
Timestamp fingerprint width	Use this parameter to set the width in bits for the time stamp fingerprint on the TX path. The default value is 4 bits.

3. 10GbE MAC Design Examples

You can use the following 10GbE design examples and testbenches to help you get started with the 10GbE MAC IP core and use the core in your design:

- 10GbE MAC with XAUI PHY
- 10GbE MAC with 10GBASE-R PHY

XAUI PHY and 10GBASE-R PHY do not support Stratix III devices.

3.1. Software and Hardware Requirements

Altera uses the following hardware and software to test the 10GbE design examples and testbenches:

- Quartus II software 14.0
- Stratix IV GX FPGA development kit (for XAUI PHY)
- Transceiver Signal Integrity development kit, Stratix IV GT Edition (for 10GBASE-R PHY)
- ModelSim®-AE 6.6c, ModelSim-SE 6.6c or higher

For more information on the development kits, refer to the following documents:

- *Stratix IV GX Development Kit User Guide*
- *Stratix IV GX Development Kit Reference Manual*
- *Transceiver Signal Integrity Development Kit, Stratix IV GT Edition User Guide*
- *Transceiver Signal Integrity Development Kit, Stratix IV GT Edition Reference Manual*

3.2. 10GbE Design Example Components

You can use the 10GbE MAC IP core design example to simulate a complete 10GbE design in an Altera FPGA. You can compile the design example using the simulation files generated by the Quartus II software and program the targeted Altera device after a successful compilation.

Figure 3–1 shows the block diagram of the 10GbE design examples.

Figure 3–1. 10GbE Design Example Block Diagram

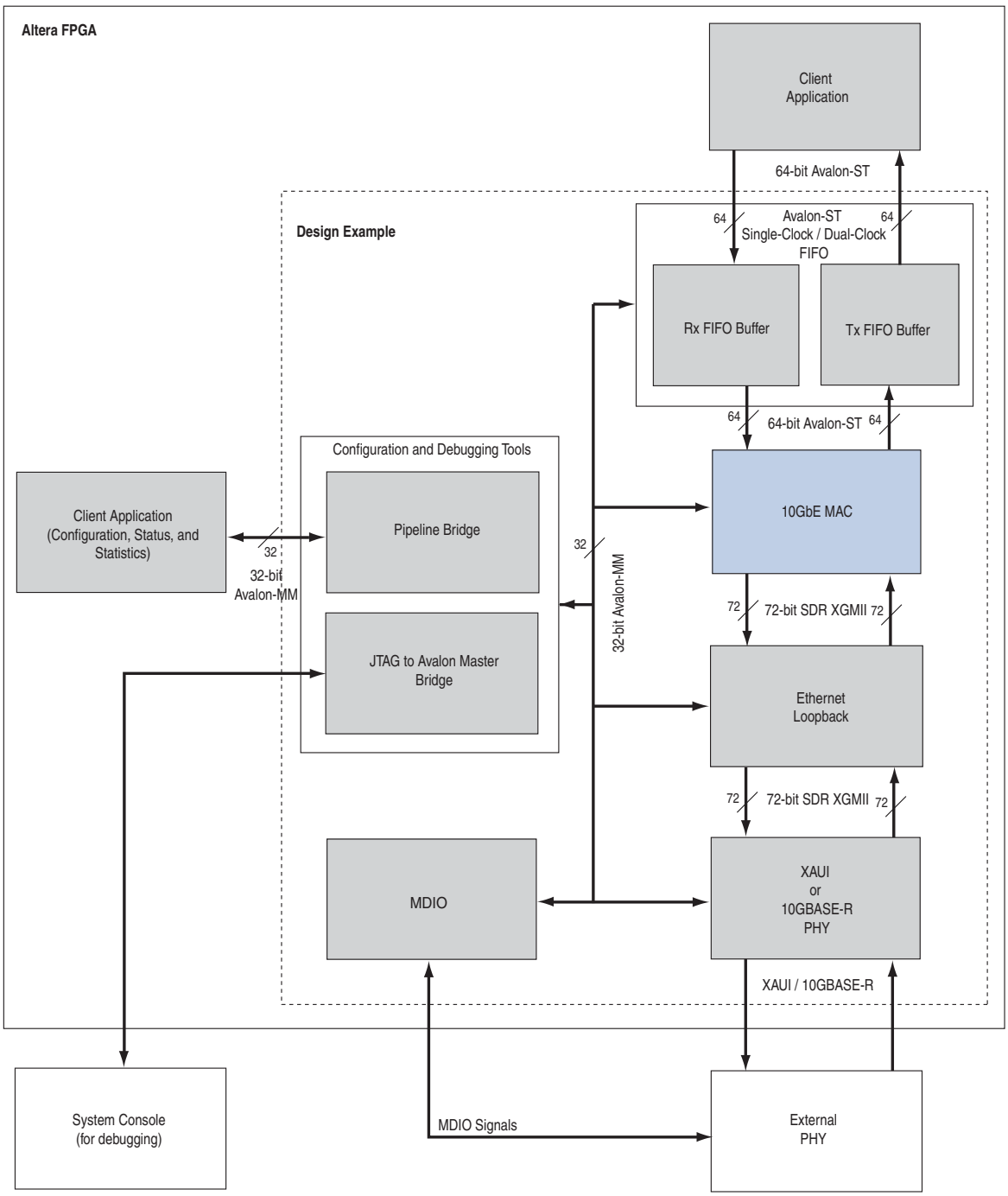

The design example comprises the following components:

- 10GbE Ethernet MAC—the MAC IP core with default settings. This IP core includes memory-based statistics counters.
- XAUI PHY or 10GBASE-R PHY—the PHY IP core with default settings. The XAUI PHY is set to **Hard XAUI** by default.
- Ethernet Loopback— the loopback module provides a mechanism for you to verify the functionality of the MAC and PHY. Refer to Section 3.2.0.1, Ethernet Loopback Module for more information about this module.
- RX and TX FIFO buffers—Avalon-ST Single-Clock or Dual-Clock FIFO cores that buffer receive and transmit data between the MAC and client. These FIFO buffers are 64 bits wide and 512 bits deep. The default configuration is Avalon-ST Single-Clock FIFO, which operates in store and forward mode and you can configure it to provide packet-based flushing when an error occurs.

   To enable the Avalon-ST Single-Clock FIFO to operate in cut through mode, turn off the **Use store and forward** parameter in the **Avalon-ST Single Clock FIFO** parameter editor.

- Configuration and debugging tools—provides access to the registers of the following components via the Avalon Memory-Mapped (Avalon-MM) interface: MAC, MDIO, Ethernet loopback, PHY, and FIFO buffers. The provided testbench includes an Avalon driver which uses the pipeline bridge to access the registers. You can use the system console to access the registers via the JTAG to Avalon Master Bridge core when verifying the design in the hardware.

 To learn more about the components, refer to the respective documents:

- XAUI PHY and 10GBASE-R PHY, refer to *Altera Transceiver PHY IP Core User Guide*.
- Avalon-ST Single-Clock or Dual-Clock FIFO, JTAG to Avalon Master Bridge, and MDIO cores, refer to *Embedded Peripherals IP User Guide*.
- Pipeline bridge, refer to *Avalon Memory-Mapped Bridges* in volume 4 of the *Quartus II Handbook*.
- System Console, refer to *Analyzing and Debugging Designs with the System Console* in volume 3 of the *Quartus II Handbook*.

3.2.0.1. Ethernet Loopback Module

You can enable one of the following loopback types:

- Local loopback—turn on this loopback to verify the functionality of the MAC during simulation. When you enable the local loopback, the Ethernet loopback module takes the transmit frame from the MAC XGMII TX and loops it back to the MAC XGMII RX datapath. During this cycle, the loopback module also forwards the TX frame to the PHY. While the local loopback is turned on, the loopback module ignores any frame it receives from the PHY.

- Line loopback—turn on this loopback to verify the functionality of the PHY when verifying the design example in hardware. When you enable the line loopback, the Ethernet loopback module takes the XGMII RX signal received from the PHY and loops it back to the PHY's XGMII TX signal. During this cycle, the loopback module also forwards the XGMII RX signal to the MAC. While the line loopback is turned on, the loopback module ignores any frame transmitted from the MAC.

Table 3–1 describes the registers you can use to enable or disable the desired loopback.

Table 3–1. Loopback Registers

Byte Offset	Register	Description
0x00	`line loopback`	Set this register to 1 to enable line loopback; 0 to disable it.
0x04	Reserved	—
0x08	`local loopback`	Set this register to 1 to enable local loopback; 0 to disable it.

3.2.0.2. Base Addresses

Table 3–2 lists the design example components that you can reconfigure to suit your verification objectives. To reconfigure the components, write to their registers using the base addresses listed in the table and the register offsets described in the components' user guides. Refer to Table 3–1 for the Ethernet loopback registers.

Table 3–2. Base Addresses of Design Example Components

Component	Base Address
10GbE MAC	0x000
XAUI or 10GBASE-R PHY	0x40000
MDIO	0X10000
Ethernet loopback	0x10200
RX FIFO (Avalon-ST Single-Clock FIFO)	0x10400
TX FIFO (Avalon-ST Single-Clock FIFO)	0x10600



This design example uses a 19-bit width address bus to access the base address of components other than the MAC.

3.3. 10GbE Design Example Files

Figure 3–2 shows the directory structure for the design examples and testbenches. The **..\csr_script** directory contains the design example script files.

Figure 3–2. Design Example Folders

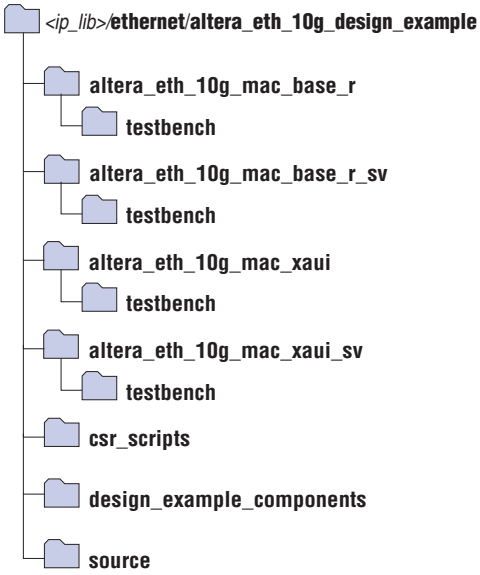

Table 3–3 lists the design example files. For the description of testbench files, refer to Table 3–5 on page 3–10.

Table 3–3. 10GbE Design Example Files (Part 1 of 2)

File Name	Description
setup_proj.tcl	A Tcl script that creates a new Quartus II project and sets up the project environment for your design example. Not applicable for Stratix V design.
setup_proj_sv.tcl	A Tcl script that creates a new Quartus II project for Stratix V design and sets up the project environment for your design example.
altera_eth_10g_design_mac_xaui.qsys	A Qsys file for the 10GbE MAC and XAUI PHY design example. The PHY is set to hard XAUI by default.
altera_eth_10g_design_mac_xaui_sv.qsys	A Qsys file for the 10GbE MAC and XAUI PHY design example with the Quartus II software targeting the Stratix V device. The PHY is set to hard XAUI by default.
altera_eth_10g_design_mac_base_r.qsys	A Qsys file for the 10GbE MAC and 10GBASE-R PHY design example.
altera_eth_10g_design_mac_base_r_sv.qsys	A Qsys file for the 10GbE MAC and 10GBASE-R PHY design example with the Quartus II software targeting the Stratix V device.

Table 3–3. 10GbE Design Example Files (Part 2 of 2)

File Name	Description
setup_SIVGX230C2ES.tcl	A Tcl script that sets the pin assignments and I/O standards for the Stratix IV GX FPGA development board. Use this Tcl script for the 10GbE MAC with XAUI PHY design example.
setup_EP4S100G5H40I3.tcl	A Tcl script that sets the pin assignments and I/O standards for the Stratix IV GT Signal Integrity development board. Use this Tcl script for the 10GbE MAC with 10GBASE-R PHY design example.
setup_5SGXEA7N2F40C2ES.tcl	A Tcl script that sets the pin assignments and I/O standards for the Stratix V GX Signal Integrity development board. Use this Tcl script for the 10GbE MAC with 10GBASE-R PHY design example.
top.sdc	The Quartus II SDC constraint file for use with the TimeQuest timing analyzer.
top.v	The top-level entity file of the design example for verification in hardware. Not applicable for Stratix V design.
top_sv.v	The top-level entity file of the design example—with the Quartus II software targeting the Stratix V device—for verification in hardware.
common.tcl	A Tcl script that contains basic functions based on the system console APIs to access the registers through the Avalon-MM interface.
config.tcl	A Tcl script that configures the design example.
csr_pkg.tcl	A Tcl script that maps address to the Avalon-MM control registers. The script contains APIs which is used by **config.tcl** and **show_stats.tcl**.
show_stats.tcl	A Tcl script that displays the MAC statistics counters.
altera_eth_10g_design_example_hw.tcl	A hardware Tcl script that contains the composition of the Ethernet system.

3.4. Creating a New 10GbE Design

You can use the Quartus II software to create a new 10GbE design. Altera provides a customizable Qsys design example file to facilitate the development of your 10GbE design. Follow these steps to create the design:

1. Copy the respective design example directory to your preferred project directory: **altera_eth_10g_mac_xaui** or **altera_eth_10g_mac_base_r** from *<ip library>*/**ethernet**/**altera_eth_10g_design_example**.
2. Launch the Quartus II software and open the **top.v** file from the project directory.

3. Open the Quartus II Tcl Console window by pointing to **Utility Windows** on the View menu and then selecting **Tcl Console**. In the Quartus II Tcl Console window, type the following command to set up the project environment:

   ```
   source setup_proj.tcl↵
   ```

4. Load the pin assignments and I/O standards for the development board:

   - For the 10GbE MAC with XAUI PHY design example, type the following command:

     ```
     source setup_SIVGX230C2ES.tcl↵
     ```

     This command assigns the XAUI serial interface to the pins that are connected to the HSMC Port A of the Stratix IV GX development board.

   - For the 10GbE MAC with 10GBASE-R design example, type the following command:

     ```
     source setup_EP4S100G2F40I1.tcl↵
     ```

     This command assigns the 10GBASE-R serial interface to the pins that are connected to the SMA connectors (J38 to J41) of the Stratix IV GT development board.

   For more information about the development boards, refer to the respective reference manuals: *Stratix IV GX Development Kit Reference Manual* or *Transceiver Signal Integrity Development kit, Stratix IV GT Edition Reference Manual*.

5. Launch Qsys from the Tools menu and open the **altera_eth_10g_mac_base_r.qsys** or **altera_eth_10g_mac_xaui.qsys** file. For design targeting the Stratix V device family, use the **altera_eth_10g_mac_base_r_sv.qsys** or **altera_eth_10g_mac_xaui_sv.qsys** file.

   By default, the design example targets the Stratix IV device family. To change the target device family, click on the **Project Settings** tab and select the desired device from the **Device family** list.

6. Turn off the additional module under the **Use** column if your design does not require them. This action disconnects the module from the 10GbE system.
7. Double-click **eth_10g_design_example_0** to launch the parameter editor.
8. Specify the required parameters in the parameter editor. For detailed explanations of these parameters, refer to "10GbE Design Example Parameter Settings" on page 3–8.
9. Click **Finish**.
10. On the **Generation** tab, select either a Verilog HDL or a VHDL simulation model and make sure that the **Create HDL design files for synthesis** option is turned on.
11. Click **Generate** to generate the simulation and synthesis files.

3.5. 10GbE Design Example Parameter Settings

You can customize the 10GbE design example by specifying the parameters using the parameter editor. Table 3–4 describes these parameters.

Table 3–4. Design Example Parameters

Name	Value	Description
Configuration		
MDIO	**MDIO** **None**	Specifies whether the Ethernet system requires a MDIO core to access the external PHY device management registers for configuration and management purposes.
PHY IP	**XAUI PHY** **10GBase-R PHY** **None**	Specifies which protocol-specific PHY IP core to use for the Ethernet system. For XAUI PHY, you can choose to implement the system in soft or hard logic.
FIFO	**Avalon-ST Single Clock FIFO** **Avalon-ST Dual Clock FIFO** **Avalon-ST Single Clock FIFO + Avalon-ST Dual Clock FIFO** **None**	Specifies which FIFO buffer to use for the Ethernet system. The Avalon-ST Single Clock FIFO operates with a common clock for the input and output ports while the Avalon-ST Dual Clock FIFO operates with independent clocks for the input and output ports. You cannot enable a different FIFO option for TX datapath and RX datapath. If you select **Avalon-ST Single Clock FIFO**, the design includes single clock FIFO at both TX and RX datapaths.



The parameter values you select on **Configuration** tab correspond with the other tabs that require further parameterization. You should only parameterize the components you selected and omit the others. Editing the component parameters that were not selected may cause the system generation to fail.



For more information about the parameter settings of other components, refer to the respective documents:

- 10GbE MAC, refer to "10GbE MAC Parameter Settings" on page 2–8.
- Avalon-ST Single-Clock or Dual-Clock FIFO and MDIO core, refer to *Embedded Peripherals IP User Guide*.
- XAUI PHY and 10GBASE-R PHY, refer to *Altera Transceiver PHY IP Core User Guide*.

3.6. 10GbE Testbenches

Altera provides testbenches for you to verify the design examples. The following sections in this document describe the testbench, its components, and use.

3.6.1. 10GbE Testbench

The testbenches operate in loopback mode. Figure 3–3 shows the flow of the packets.

Figure 3–3. Testbench Block Diagram

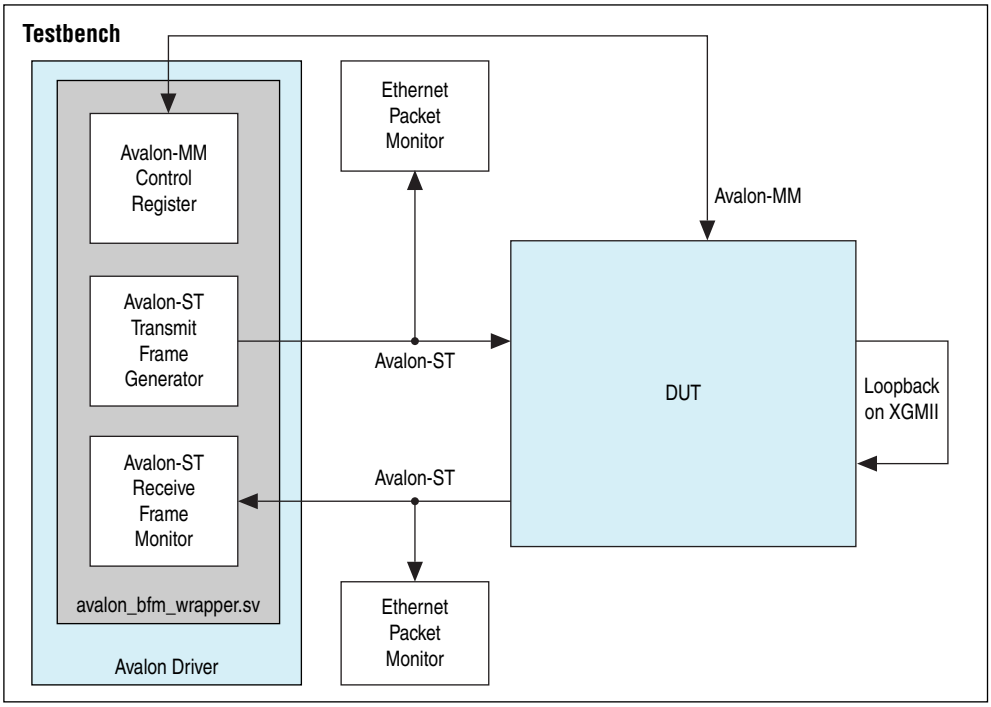

3.6.2. 10GbE Testbench Component

The 10GbE testbench comprises the following modules:

- Device under test (DUT)—the design example.
- Avalon driver—uses Avalon-ST bus functional models (BFMs) to exercise the transmit and receive paths. The driver also utilizes the Avalon-MM BFM to access the Avalon-MM interfaces of the design example components.
- Packet monitors—monitors the transmit and receive datapaths, and displays the frames in the simulator console.

3.6.3. 10GbE Testbench Files

The following directories contain the 10GbE testbench files which are in clear text:

- 10GbE MAC and XAUI PHY testbench—<*ip library*>/**ethernet**/**altera_eth_10g_design_example**/**altera_eth_10g_mac_xaui**/**testbench**
- 10GbE MAC and 10GBASE-R PHY testbench— <*ip library*>/**ethernet**/**altera_eth_10g_design_example**/**altera_eth_10g_mac_base_r**/**testbench**

Table 3–5 describes the files that implement the testbench.

Table 3–5. Testbench Files

File Name	Description
avalon_bfm_wrapper.sv	A wrapper for the Avalon BFMs that the **avalon_driver.sv** file uses.
avalon_driver.sv	A SystemVerilog HDL driver that utilizes the BFMs to exercise the transmit and receive path, and access the Avalon-MM interface.
avalon_if_params_pkg.sv	A SystemVerilog HDL testbench that contains parameters to configure the BFMs. Because the configuration is specific to the DUT, you must not change the contents of this file.
avalon_st_eth_packet_monitor.sv	A SystemVerilog HDL testbench that monitors the Avalon-ST transmit and receive interfaces.
eth_mac_frame.sv	A SystemVerilog HDL class that defines the Ethernet frames. The **avalon_driver.sv** file uses this class.
eth_register_map_params_pkg.sv	A SystemVerilog HDL package that maps addresses to the Avalon-MM control registers.
tb_run.tcl	A Tcl script that starts a simulation session in the ModelSim simulation software. Not applicable for Stratix V design.
tb_run_sv.tcl	A Tcl script that starts a simulation session in the ModelSim simulation software for Stratix V design only.
tb.sv	The top-level testbench file. This file includes the customized 10GbE MAC which is the device under test (DUT), a client packet generator, and a client packet monitor along with other logic blocks. Not applicable for Stratix V design.
tb_sv.sv	The top-level testbench file for Stratix V design only. This file includes the customized 10GbE MAC which is the device under test (DUT), a client packet generator, and a client packet monitor along with other logic blocks.
wave.do	A signal tracing macro script to be used with the ModelSim simulation software to display testbench signals.

3.6.4. 10GbE Testbench Simulation Flow

Upon a simulated power-on reset, each testbench performs the following operations:

1. Initializes the DUT by configuring the following options via the Avalon-MM interface:
   a. In the MAC, enables address insertion on the transmit path and sets the transmit primary MAC address to EE-CC-88-CC-AA-EE.
   b. In the TX and RX FIFO (Avalon-ST Single Clock FIFO core), enables drop on error.
2. Starts packet transmission. The testbench sends a total of eight packets:
   a. 64-byte basic Ethernet frame
   b. Pause frame
   c. 1518-byte VLAN frame
   d. 1518-byte basic Ethernet frame
   e. 64-byte stacked VLAN frame
   f. 500-byte VLAN frame
   g. Pause frame
   h. 1518-byte stacked VLAN frame
3. Ends the transmission and displays the MAC statistics in the transcript pane.

3.6.5. Simulating the 10GbE Testbench with the ModelSim Simulator

To use the ModelSim simulator to simulate the testbench design, follow these steps:

1. Copy the respective design example directory to your preferred project directory: **altera_eth_10g_mac_xaui** or **altera_eth_10g_mac_base_r** from *<ip library>*/**ethernet**/**altera_eth_10g_design_example**.
2. The design example and testbench files are set to read only. Altera recommends that you turn off the read-only attribute of all design example and testbench files.
3. Launch the Quartus II software and open the **top.v** file from the project directory.
4. Open the Quartus II Tcl Console window by pointing to **Utility Windows** on the View menu and then selecting **Tcl Console**. In the Quartus II Tcl Console window, type the following command to set up the project environment:

   ```
   source setup_proj.tcl↵
   ```

5. Launch Qsys from the Tools menu and open **altera_eth_10g_mac_base_r.qsys** or **altera_eth_10g_mac_xaui.qsys** in the File menu.
6. For the 10GbE MAC with XAUI design example, the default setting of the XAUI PHY is **Hard XAUI**. Follow these steps if you want to set the PHY to **Soft XAUI**:
   a. Double-click the XAUI PHY module to open the parameter editor.
   b. On the **General Options** tab, select **Soft XAUI** for **XAUI Interface Type**.
7. On the **Generation** tab, select Verilog simulation model.

8. Click **Generate** to generate the system.Launch the ModelSim simulator software.
9. Change the working directory to *<project directory>/<design example directory>*/**testbench** in the **File** menu.
10. Run the following command to set up the required libraries, compile the generated IP Functional simulation model, and exercise the simulation model with the provided testbench:

    ```
    do tb_run.tcl↵
    ```

    The ModelSim transcript pane in Main window displays messages from the testbench reflecting the current task being performed.

Upon a successful simulation, the simulator displays the following `RX Statistics` and `TX Statistics`:

```
# framesOK = 8
# framesErr = 0
# framesCRCErr = 0
# octetsOK = 5138
# pauseMACCtrlFrames = 2
# ifErrors = 0
# unicastFramesOK = 4
# unicastFramesErr = 0
# multicastFramesOK = 1
# multicastFramesErr = 0
# broadcastFramesOK = 1
# broadcastFramesErr = 0
# etherStatsOctets = 5310
# etherStatsPkts = 8
# etherStatsUndersizePkts = 0
# etherStatsOversizePkts = 0
# etherStatsPkts64Octets = 4
# etherStatsPkts65to127Octets = 0
# etherStatsPkts128to255Octets = 0
# etherStatsPkts256to511Octet = 1
# etherStatsPkts512to1023Octets = 0
# etherStatsPkts1024to1518Octets = 3
# etherStatsPkts1519OtoXOctets = 0
# etherStatsFragments = 0
# etherStatsJabbers = 0
# etherStatsCRCErr = 0
# unicastMACCtrlFrames = 1
# multicastMACCtrlFrames = 1
# broadcastMACCtrlFrames = 0
```

3.6.6. Enabling Local Loopback

You can turn on local loopback to verify the functionality of the MAC during simulation. Follow these steps to enable local loopback:

1. Open the **tb.sv** file.
2. Insert the command `U_AVALON_DRIVER.avalon_mm_csr_wr(offset,value)` where offset is the sum of the base address of the loopback module and the register offset, and value is the value to write to the register.
3. Set value to 1 to enable local loopback; 0 to disable it. Altera recommends that you insert the command after the command that configures the RX FIFO. For example, the following code segment enables local loopback:

```
// Configure the RX FIFO
U_AVALON_DRIVER.avalon_mm_csr_wr(RX_FIFO_DROP_ON_ERROR_ADDR,RX_FIFO_DROP_ON_ERROR);

// Read the configured registers
U_AVALON_DRIVER.avalon_mm_csr_rd(RX_FIFO_DROP_ON_ERROR_ADDR, readdata);
$display("RX FIFO Drop on Error Enable      = %0d", readdata[0]);

U_AVALON_DRIVER.avalon_mm_csr_wr(32'h948, 1)
```

4. Run the following command again to reconfigure the loopback module, set up the required libraries, compile the generated IP Functional simulation model, and exercise the simulation model:

   ```
   do tb_run.tcl↵
   ```

3.6.7. 10GbE Simulation Timing Diagrams

Figure 3–4 shows the reset and initial configuration sequence. The first read or write transaction must be at least one clock cycle after the `csr_reset_reset_n` signal completes.

Figure 3–4. Reset and Configuration

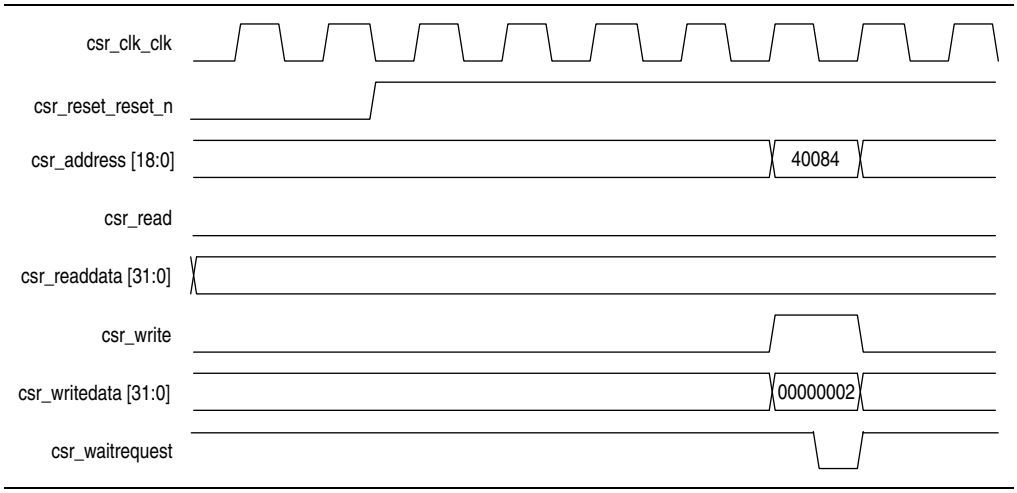

Figure 3–5 shows the transmission of the first 60-byte frame upon a successful reset and initial configuration. The same frame is looped back to the receive datapath.

Figure 3–5. Frame Transmission and Reception

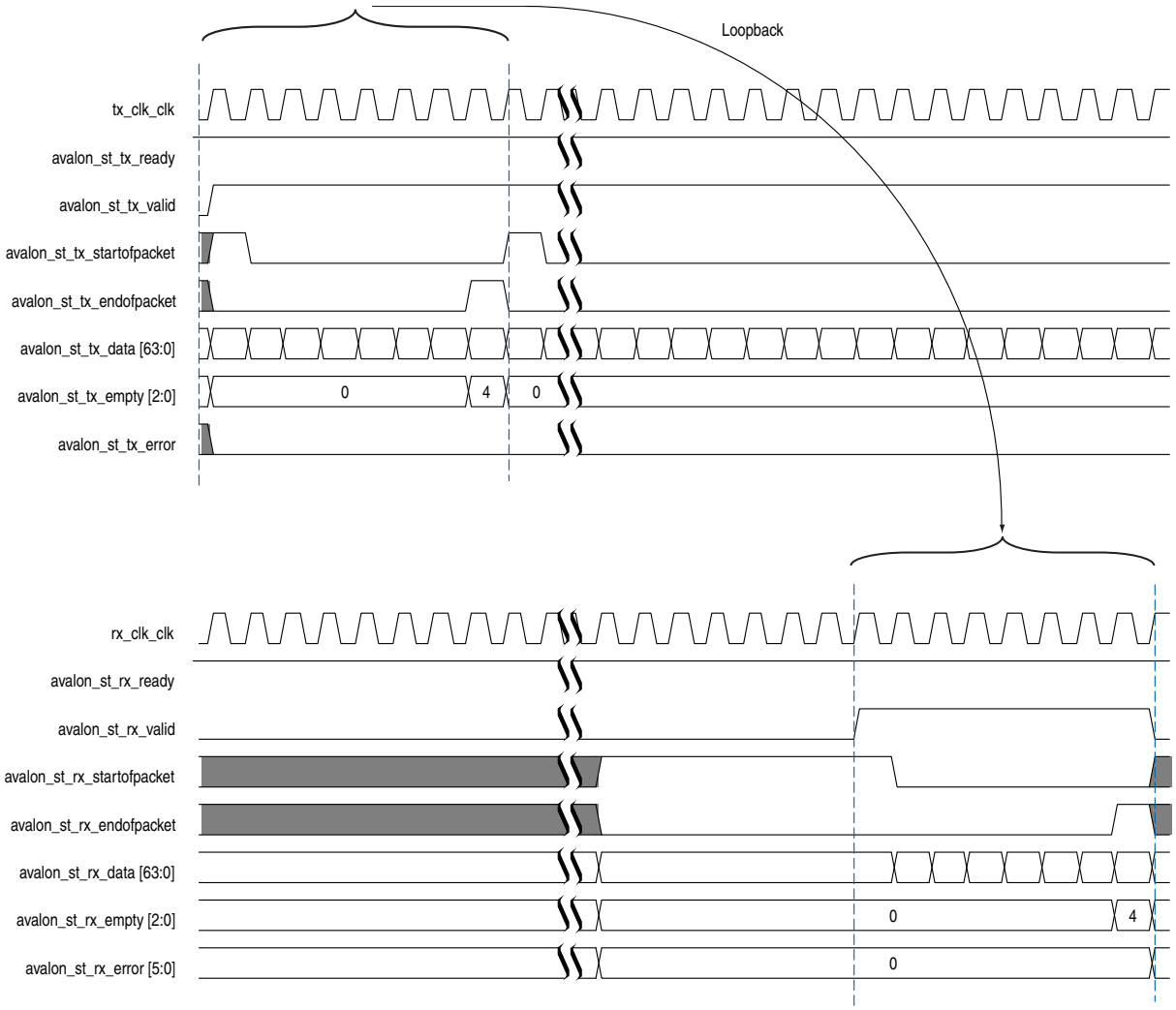

3.7. 10GbE Design Example Compilation and Verification in Hardware

Figure 3–6 shows the components in the top-level file provided with the 10GbE design example.

Figure 3–6. 10GbE Top-Level Components

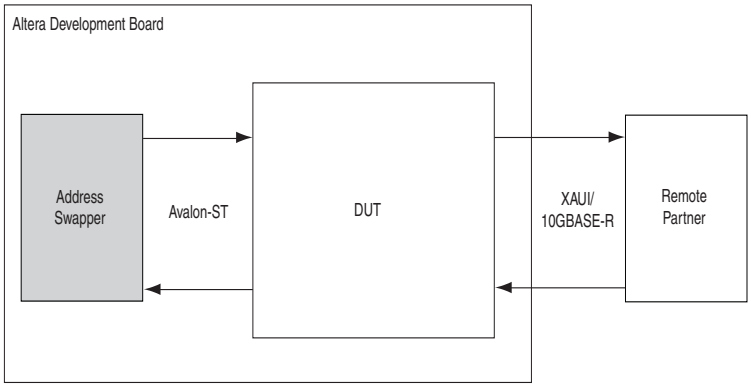

The address swapper swaps the destination address and source address in the receive frame before sending the frame onto the transmit path. You must connect the DUT—design example—to a remote partner that generates, transmits, and receives frames.

3.7.1. Compiling the 10GbE Design

You can use the Quartus II software to compile the design example and program the targeted Altera device after a successful compilation.

Follow these steps to compile the design and program the device:

1. Copy the respective design example directory to your preferred project directory: **altera_eth_10g_mac_xaui** or **altera_eth_10g_mac_base_r** from *<ip library>*/**ethernet**/**altera_eth_10g_design_example**.
2. Launch the Quartus II software and open **top.v** from the project directory.
3. Open the Quartus II Tcl Console window by pointing to **Utility Windows** on the View menu then clicking **Tcl Console**. In the Quartus II Tcl Console window, type the following command to set up the project environment:

   ```
   source setup_proj.tcl↵
   ```

4. Load the pin assignments and I/O standards for the development board:
   - For the 10GbE MAC with XAUI PHY design example, type the following command:

     ```
     source setup_SIVGX230C2ES.tcl↵
     ```

     This command assigns the XAUI serial interface to the pins that are connected to the HSMC Port A of the Stratix IV GX development board.
   - For the 10GbE MAC with 10BASE-R design example, type the following command:

     ```
     source setup_EP4S100G2F40I1.tcl↵
     ```

     This command assigns the 10GBASE-R serial interface to the pins that are connected to the SMA connectors (J38 to J41) of the Stratix IV GT development board.

   For more information about the development boards, refer to the respective reference manuals: *Stratix IV GX Development Kit Reference Manual* or *Transceiver Signal Integrity Development kit, Stratix IV GT Edition Reference Manual*.
5. Launch Qsys from the Tools menu and open **altera_eth_10g_mac_base_r.qsys** or **altera_eth_10g_mac_xaui.qsys**.
6. For the 10GbE MAC with XAUI PHY design example, the default setting of the PHY is **Hard XAUI**. Follow these steps if you want to set the PHY to **Soft XAUI**:
   a. Double-click the XAUI PHY module to open the parameter editor.
   b. On the **General Options** tab, select **Soft XAUI** for **XAUI Interface Type**.
7. Click **Save** on the File menu.
8. On the **Generation** tab, turn on **Create Synthesis RTL Files**.
9. Click **Generate** to generate the system.
10. Click **Start Compilation** on the Processing menu to compile the design example.
11. Upon a successful compilation, click **Programmer** on the Tools menu to program the device.

For more information about device programming, refer to *Quartus II Programmer* in volume 3 of the *Quartus II Handbook*.

If you are not using the Stratix IV GX FPGA development board or the Transceiver Signal Integrity development board, Stratix IV GT Edition, modify **setup_proj.tcl** and **setup_SIVGX230C2ES.tcl** or **setup_EP4S100G2F40I1.tcl** to suit your hardware.

3.7.2. Verifying the 10GbE Design in Hardware

After programming the targeted Altera device, follow these steps to verify your design and collect the statistics:

1. Copy the **csr_scripts** directory to the design example directory.
2. Launch Qsys and access the **System Console** by clicking **System Console** on the Tools menu.
3. Change the working directory to *<project directory>*/**csr_scripts**.
4. Type the following command to configure the design example:

   ```
   source config.tcl↵
   ```

5. Start frame transmission on your remote partner to exercise the datapaths.
6. Type the following command to read and view the statistics:

   ```
   source show_stats.tcl↵
   ```

☞ The `config.tcl` and `show_stats.tcl` scripts support only one USB-Blaster connection.

3.7.3. Debugging

You can use the system console to perform the following tasks for debugging purposes:

- Reconfigure the design example components and retrieve the registers during runtime by following these steps:

  a. Create a new Tcl script.

  b. Add the following commands:

  ```
  source common.tcl

  # establishes the connection
  open_jtag

  # use rd32 to retrieve the register value
  # base address = base address of the component
  # offset = byte offset of the register
  rd32 <base address> 0 <offset>

  # use wr32 to configure the register
  # base address = base address of the component
  # offset = byte offset of the register
  # value = value to be written to the register
  wr32 <base address> 0 <offset> <value>

  # closes the connection
  close_jtag
  ```

  Save and close the Tcl script and type the following command:

  ```
  source <script>.tcl↵
  ```

- Retrieve and view the statistics counters by typing the following command:

  ```
  source show_stats.tcl↵
  ```

- Turn on the line loopback to verify the functionality of the XAUI/10GBASE-R PHY by following these steps:
  a. Edit the script **config.tcl**.
  b. Add the command `write_line_loopback(value)` immediately after the command that establishes the JTAG connection. Set the argument value, to 1 to enable line loopback; 0 to disable line loopback. For example, the following codes enable line loopback:

```
open_jtag
write_line_loopback 1
```

  c. Save and close **config.tcl**, and type the following command:

```
source config.tcl↵
```

For more information on the System Console, refer to *Analyzing and Debugging Designs with the System Console* in volume 3 of the *Quartus II Handbook*.

3.7.4. 10GbE Design Transmit and Receive Latencies

Altera uses the following definitions for the transmit and receive latencies:

- Transmit latency is the number of clock cycles the MAC function takes to transmit the first byte on the network-side interface (XGMII SDR) after the bit was first available on the Avalon-ST interface.
- Receive latency is the number of clock cycles the MAC function takes to present the first byte on the Avalon-ST interface after the bit was received on the network-side interface (XGMII SDR).

Table 3–6 shows the transmit and receive nominal latencies of the design example.

Table 3–6. Transmit and Receive Latencies of the 10GbE Design Example

Configuration	Latency (Clock Cycles) *(1) (2)*	
	Transmit (with respect to TX clock)	Receive (with respect to RX clock)
MAC and Ethernet loopback	10	13
Dual Core FIFO	6	6
Single Core FIFO	10	10
Soft XAUI PHY	41 *(3)*	
Hard XAUI PHY	24 *(3)*	
Soft 10GBASE-R PHY	56 *(3)*	

Notes to Table 3–6:

(1) The clocks in all domains are running at the same frequency.
(2) The latency values are based on the assumption that there is no backpressure on the Avalon-ST TX and RX interface.
(3) Total latency for both transmit and receive in this design example targeting the Stratix IV device family.

3.7.5. 10GbE Design Performance and Resource Utilization

Table 3–7 provides the estimated performance and resource utilization of the 10GbE design example obtained by compiling the design with the Quartus II software targeting the Stratix IV GX (EP4SGX230KF40C2ES) device with speed grade –2.

Table 3–7. Stratix IV Performance and Resource Utilization

Components	Combinational ALUTs	Memory ALUTs	Logic Registers	Memory Block (M9K)	f_{MAX} (MHz)
MAC	4,054	36	4,710	6	≥156.25
Loopback	293	0	182	4	≥156.25
RX SC FIFO	231	0	210	5	≥156.25
TX SC FIFO	212	0	210	4	≥156.25
Hard XAUI PHY	1,892	0	1,215	0	≥156.25
MDIO	116	0	133	0	≥156.25
JTAG Master	523	0	440	1	≥156.25
Address Swapper	66	0	71	0	≥156.25
Qsys Fabric	993	2	1,018	0	≥156.25
Total Resource Utilization	7,840	38	8,019	20	≥156.25

Table 3–8 provides the estimated performance and resource utilization of the 10GbE design example obtained by compiling the design with the Quartus II software targeting the Cyclone V GX (5CGXFC7D6F31C6) device with speed grade –6.

Table 3–8. Cyclone V Performance and Resource Utilization

Components	Combinational ALUTs	Logic Registers	Memory Block (M10K)	f_{MAX} (MHz)
MAC	4,417	5,464	6	≥156.25
Loopback	291	199	4	≥156.25
RX SC FIFO	242	231	4	≥156.25
TX SC FIFO	215	232	4	≥156.25
MDIO	118	144	0	≥156.25
Soft XAUI	1,642	1,750	3	≥156.25
JTAG Master	537	468	1	≥156.25
Address Swapper	66	71	0	≥156.25
Qsys Fabric	444	688	1	≥156.25
Total Resource Utilization	7,972	9,247	23	≥156.25

Table 3–9 provides the estimated performance and resource utilization of the 10GbE design example obtained by compiling the design with the Quartus II software targeting the Stratix V GX (5SGXEA7N2F40C2ES) device with speed grade –2.

Table 3–9. Stratix V Performance and Resource Utilization

Components	Combinational ALUTs	Memory ALUTs	Logic Registers	Memory Block (M9K)	f_{MAX} (MHz)
MAC	4,110	17	5,212	4	≥156.25
Loopback	290	0	187	4	≥156.25
RX SC FIFO	234	0	236	2	≥156.25
TX SC FIFO	220	0	246	2	≥156.25
MDIO	115	0	146	0	≥156.25
10GBASE-R PHY	112	0	114	0	≥156.25
JTAG Master	519	0	508	1	≥156.25
Address Swapper	66	0	74	0	≥156.25
Qsys Fabric	441	0	679	0	≥156.25
Total Resource Utilization	6,107	0	7,402	13	≥156.25

Table 3–10 provides the estimated performance and resource utilization of the design example with the IEEE 1588v2 feature enabled, obtained by compiling the design with the Quartus II software targeting a Stratix V (5SGTMC5K2F40C2) device with speed grade -2.

Table 3–10. Stratix V Performance and Resource Utilization with IEEE 1588v2 Feature

Components	Combinational ALUTs	Logic Registers	Memory Block (M20K)	DSP Block	f_{MAX} (MHz)
MAC	6,822	7,459	10	2	≥156.25
Loopback	291	264	4	0	≥156.25
10GBASE-R PHY	1,066	1,675	6	0	≥156.25
Time-of-Day (ToD) Clock	812	2,268	0	0	≥156.25
Transceiver Reconfiguration	1,245	871	6	0	≥156.25
Qsys Fabric	83	73	0	0	≥156.25
Total Resource Utilization	10,319	12,610	26	2	≥156.25

4. 10GbE MAC with IEEE1588v2 Design Example

This section describes the 10GbE MAC with IEEE 1588v2 design example, testbench and its components.

10GBASE-R PHY does not support Stratix III devices.

4.1. Software Requirements

Altera uses the following software to test the 10GbE with IEEE 1588v2 design example and testbench:

- Quartus II software 14.0
- ModelSim-SE 10.0b or higher

4.2. 10GbE with IEEE 1588v2 Design Example Components

You can use the 10GbE MAC IP core design example to simulate a complete 10GbE with IEEE 1588v2 design in a simulator. You can compile the design example using the Quartus II software and program the targeted Altera device after a successful compilation.

Figure 4–1 shows the block diagram of the 10GbE with IEEE 1588v2 design example.

Figure 4–1. 10GbE with IEEE 1588v2 Design Example Block Diagram

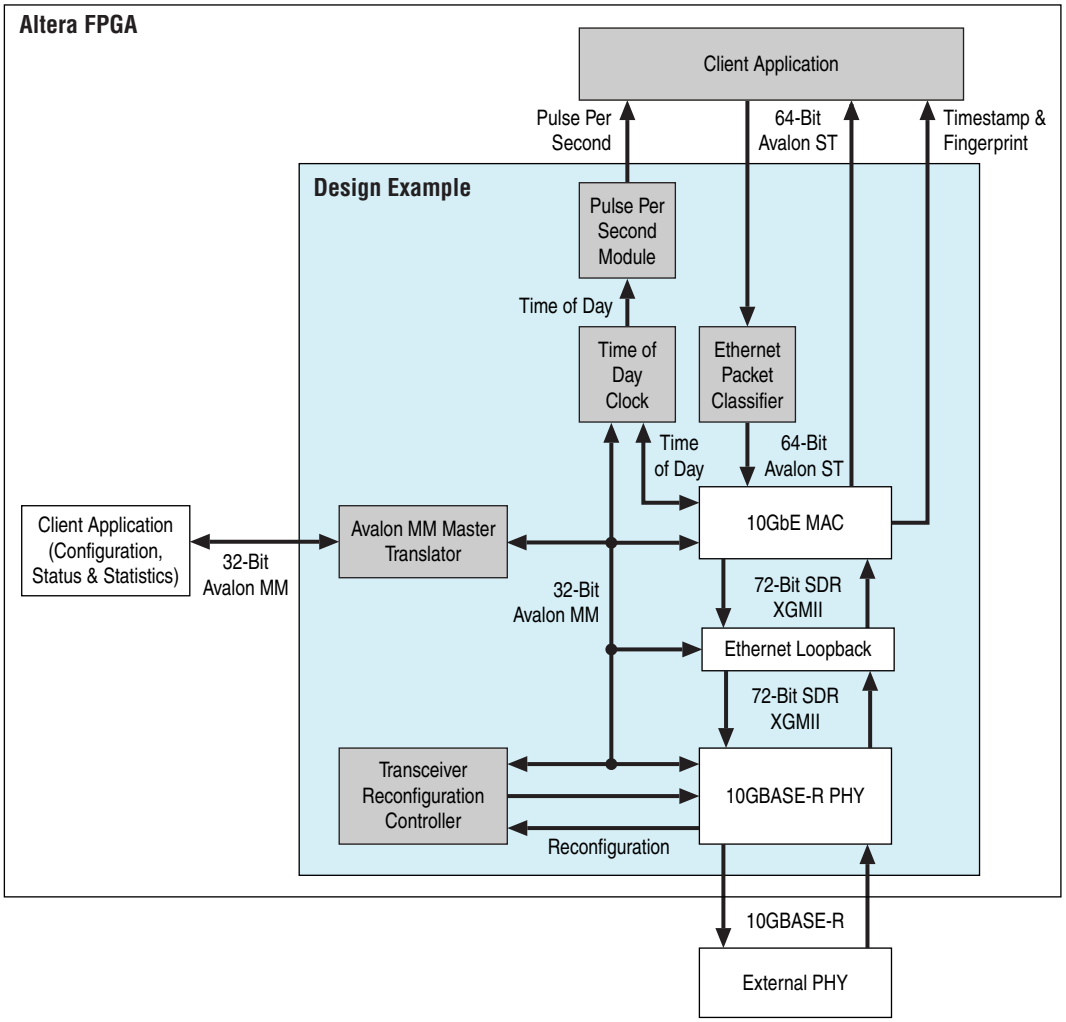

The 10GbE with IEEE 1588v2 design example comprises the following components:

- Altera Ethernet 10G design example—the default 10G design example that has the following settings:
  - 10GbE Ethernet MAC—the MAC IP core with IEEE 1588v2 option enabled.
  - 10GBASE-R PHY—the PHY IP core with IEEE 1588v2 option enabled.
  - Ethernet Loopback—the loopback module provides a mechanism for you to verify the functionality of the MAC and PHY.
  - MDIO and FIFO features turned off.
- Transceiver Reconfiguration Controller—dynamically calibrates and reconfigures the features of the PHY IP cores.
- Ethernet Packet Classifier—decodes the packet type of incoming PTP packets and returns the decoded information to the 10GbE Ethernet MAC.
- Ethernet Time-of-Day (ToD) Clock—provides 64-bits and/or 96-bits time-of-day to TX and RX of 10GbE Ethernet MAC.
- Pulse Per Second Module—returns pulse per second (pps) to user.
- Avalon MM Master Translator—provides access to the registers of the following components through the Avalon-MM interface:
  - MAC and Ethernet Loopback
  - Transceiver Reconfiguration Controller
  - ToD



For more information about ToD clock, refer to Appendix B, Time-of-Day (ToD) Clock; and for more information about Packet Classifier, refer to Appendix C, Packet Classifier.

4.2.1. Base Addresses

Table 4–1 lists the design example components that you can reconfigure to suit your verification objectives. To reconfigure the components, write to their registers using the base addresses listed in the table and the register offsets described in the components' user guides.

Table 4–1. Base Addresses of 10GbE with IEEE 1588v2 Design Example Components

Component	Base Address
MAC and Ethernet Loopback	0x00000
Transceiver Reconfiguration Controller	0x80400
Time of Day Clock	0x81000



This design example uses a 19-bit width address bus to access the base address of components other than the MAC.

4.3. 10GbE with IEEE 1588v2 Design Example Files

Table 4–2 shows the directory structure for the 10GbE with IEEE 1588v2 design examples and testbenches.

Figure 4–2. 10GbE with IEEE 1588v2 Design Example Folders

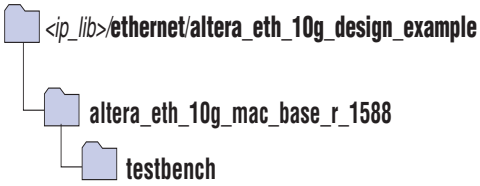

Table 4–2 lists the files in the **..\altera_eth_10g_mac_base_r_1588** directory.

Table 4–2. 10GbE with IEEE 1588v2 Design Example Files

File Name	Description
altera_eth_10g_mac_base_r_1588_top.v	The top-level entity file of the design example for verification in hardware.
altera_eth_10g_mac_base_r_1588_top.sdc	The Quartus II SDC constraint file for use with the TimeQuest timing analyzer.
altera_eth_10g_mac_base_r_1588.qsys	A Qsys file for the 10GbE MAC and 10GBASE-R PHY design example with IEEE 1588v2 option enabled.

4.4. Creating a New 10GbE with IEEE 1588v2 Design

You can use the Quartus II software to create a new 10GbE with IEEE 1588v2 design. Altera provides a Qsys design example file that you can customize to facilitate the development of your 10GbE with IEEE 1588v2 design.

To create the design, perform the following steps:

1. Launch the Quartus II software and open the **altera_eth_10g_mac_base_r_1588_top.v** file from the project directory.
2. Launch Qsys from the Tools menu and open the **altera_eth_10g_mac_base_r_1588.qsys** file. By default, the design example targets the Stratix V device family. To change the target device family, click on the **Project Settings** tab and select the desired device from the **Device family** list.
3. Turn off the additional module under the **Use** column if your design does not require it. This action disconnects the module from the 10GbE with IEEE 1588v2 system.
4. Double-click on **eth_10g_design_example_0** to launch the parameter editor.
5. Specify the required parameters in the parameter editor.
6. Click **Finish**.
7. On the **Generation** tab, select either a Verilog HDL or VHDL simulation model and make sure that the **Create HDL design files for synthesis** option is turned on.

8. Click **Generate** to generate the simulation and synthesis files.

4.5. 10GbE with IEEE 1588v2 Testbench

Altera provides testbench for you to verify the 10GbE with IEEE 1588v2 design example. The following sections in this document describe the testbench, its components, and use.

4.5.1. 10GbE with IEEE 1588v2 Testbench

The testbenches operate in loopback mode. Figure 4–3 shows the flow of the packets.

Figure 4–3. Testbench

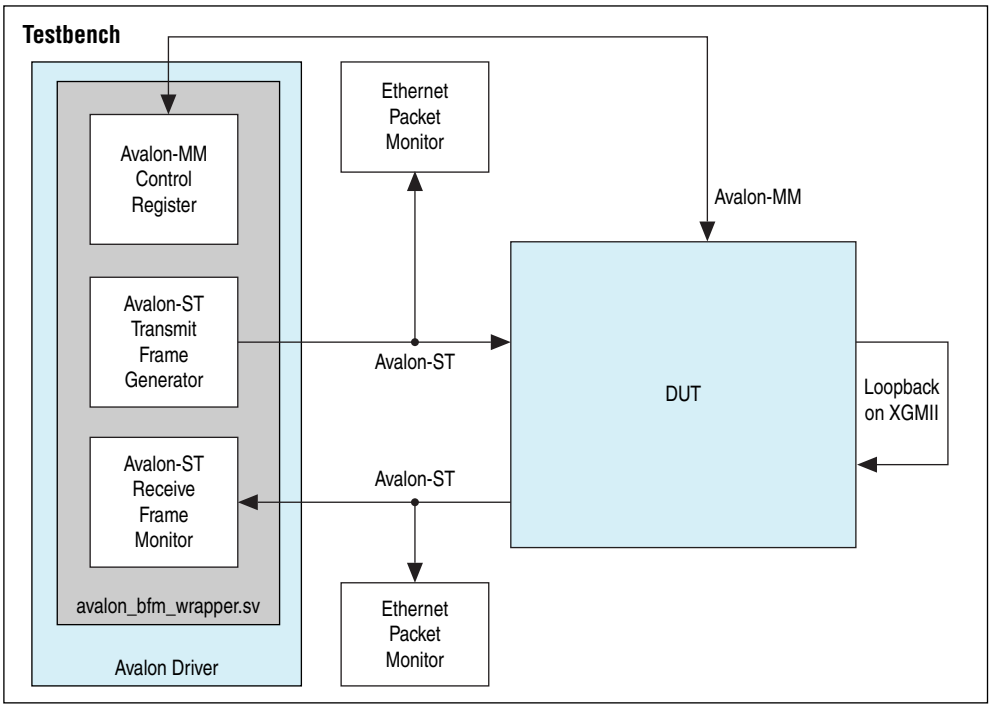

4.5.2. 10GbE with IEEE 1588v2 Testbench Components

The testbenches comprise the following modules:

- Device under test (DUT)—the design example.
- Avalon driver—uses Avalon-ST bus functional models (BFMs) to exercise the transmit and receive paths. The driver also utilizes the Avalon-MM BFM to access the Avalon-MM interfaces of the design example components.
- Packet monitors—monitors the transmit and receive datapaths, and displays the frames in the simulator console.

4.5.3. 10GbE with IEEE 1588v2 Testbench Files

The *<ip library>*/**ethernet/altera_eth_10g_design_example/altera_eth_10g_mac_base_r_1588/testbench** directory contains the testbench files.

Table 4–3 describes the files that implement the 10GbE with IEEE 1588v2 testbench.

Table 4–3. 10GbE with IEEE 1588v2 Testbench Files

File Name	Description
avalon_bfm_wrapper.sv	A wrapper for the Avalon BFMs that the **avalon_driver.sv** file uses.
avalon_driver.sv	A SystemVerilog HDL driver that utilizes the BFMs to exercise the transmit and receive path, and access the Avalon-MM interface.
avalon_if_params_pkg.sv	A SystemVerilog HDL testbench that contains parameters to configure the BFMs. Because the configuration is specific to the DUT, you must not change the contents of this file.
avalon_st_eth_packet_monitor.sv	A SystemVerilog HDL testbench that monitors the Avalon-ST transmit and receive interfaces.
default_test_params_pkg.sv	A SystemVerilog HDL package that contains the default parameter settings of the testbench.
eth_mac_frame.sv	A SystemVerilog HDL class that defines the Ethernet frames. The **avalon_driver.sv** file uses this class.
eth_register_map_params_pkg.sv	A SystemVerilog HDL package that maps addresses to the Avalon-MM control registers.
ptp_timestamp.sv	A SystemVerilog HDL class that defines the timestamp in the testbench.
tb_run_simulation.tcl	A Tcl script that starts a simulation session in the ModelSim simulation software.
tb_testcase.sv	A SystemVerilog HDL testbench file that controls the flow of the testbench.
tb_top.sv	The top-level testbench file. This file includes the customized 10GbE MAC, which is the device under test (DUT), a client packet generator, and a client packet monitor along with other logic blocks.
wave.do	A signal tracing macro script for use with the ModelSim simulation software to display testbench signals.

4.5.4. 10GbE with IEEE 1588v2 Testbench Simulation Flow

Upon a simulated power-on reset, each testbench performs the following operations:

1. Initializes the DUT by configuring the following options through the Avalon-MM interface:
   - Configures the MAC. In the MAC, enables address insertion on the transmit path and sets the transmit and receive primary MAC address to EE-CC-88-CC-AA-EE. Also enables CRC insertion on transmit path.
   - Configures Timestamp Unit in the MAC, by setting periods and path delay adjustments of the clocks.
   - Configures ToD clock by loading a predefined time value.
   - Configures clock mode of Packet Classifier to Ordinary Clock mode.
2. Starts packet transmission with different clock mode. The testbench sends a total of four packets:
   - 64-byte basic Ethernet frames
   - 1-step PTP Sync message over Ethernet
   - 1-step PTP Sync message over UDP/IPv4 with VLAN tag
   - 2-step PTP Sync message over UDP/IPv6 with stacked VLAN tag
3. Configures clock mode of Packet Classifier to End-to-end Transparent Clock mode.
4. Starts packet transmission. The testbench sends a total of three packets:
   - 1-step PTP Sync message over Ethernet
   - 2-step PTP Sync message over UDP/IPv4 with VLAN tag
   - 1-step PTP Sync message over UDP/IPv6 with stacked VLAN tag
5. Ends the transmission.

4.5.5. Simulating 10GbE with IEEE 1588v2 Testbench with ModelSim Simulator

To use the ModelSim simulator to simulate the testbench design, follow these steps:

1. Copy the respective design example directory to your preferred project directory: **altera_eth_10g_mac_base_r_1588** from *<ip library>*/**ethernet**/**altera_eth_10g_design_example**.
2. Launch Qsys from the Tools menu and open the **altera_eth_10g_mac_base_r_1588.qsys** file.
3. On the **Generation** tab, select either a Verilog HDL or VHDL simulation model.
4. Click **Generate** to generate the simulation and synthesis files.
5. Run the following command to set up the required libraries, to compile the generated IP Functional simulation model, and to exercise the simulation model with the provided testbench:

```
do tb_run_simulation.tcl↵
```

5. 1G/10GbE MAC Design Example

This section describes the 1G/10GbE MAC with Backplane Ethernet Backplane Ethernet 10GBASE-KR PHY design example, the testbench, and its components. You can configure the Backplane Ethernet 10GBASE-KR PHY IP to the following modes:

- Backplane-KR mode to interface with copper backplane
- 1G/10Gb Ethernet mode to interface with optical SFP+ modules or copper PHY devices

Backplane Ethernet 10GBASE-KR PHY only supports Arria V GZ and Stratix V devices.

5.1. Software and Hardware Requirements

Altera uses the following hardware and software to test the 1G/10GbE design example and testbench:

- Altera Complete Design Suite 14.0
- Backplane Ethernet 10GBASE-KR PHY
- Transceiver Signal Integrity Development Kit, Stratix V GX Edition
- ModelSim-AE 6.6c, ModelSim-SE 6.6c or higher

The 1G/10GbE mode is only supported in the production silicon version of the development board.

For more information about the development kit, refer to *Transceiver Signal Integrity Development Kit, Stratix V GX Edition User Guide*.

5.2. 1G/10GbE Design Example Components

You can use the 1G/10GbE MAC IP core design example to simulate a complete 1G/10GbE design in an Altera FPGA. You can compile the design example using the simulation files generated by the Quartus II software and program the targeted Altera device after a successful compilation.

Figure 5–1 shows the block diagram of a two-channel 1G/10GbE design example.

Figure 5–1. Two-Channel 1G/10GbE Design Example Block Diagram

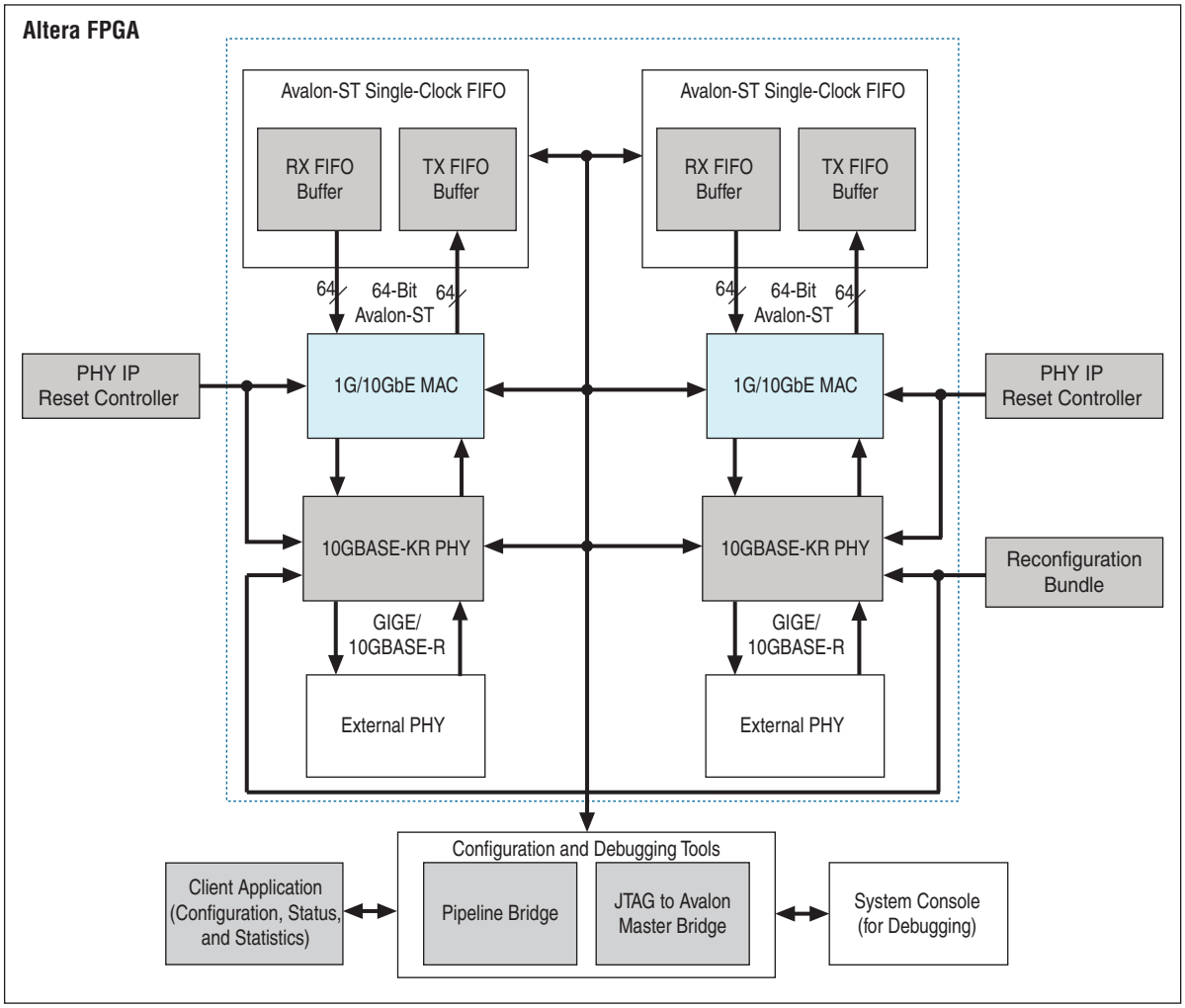

Figure 5–2 shows the clocking scheme for the design example.

Figure 5–2. 1G/10GbE Design Example Clocking Scheme

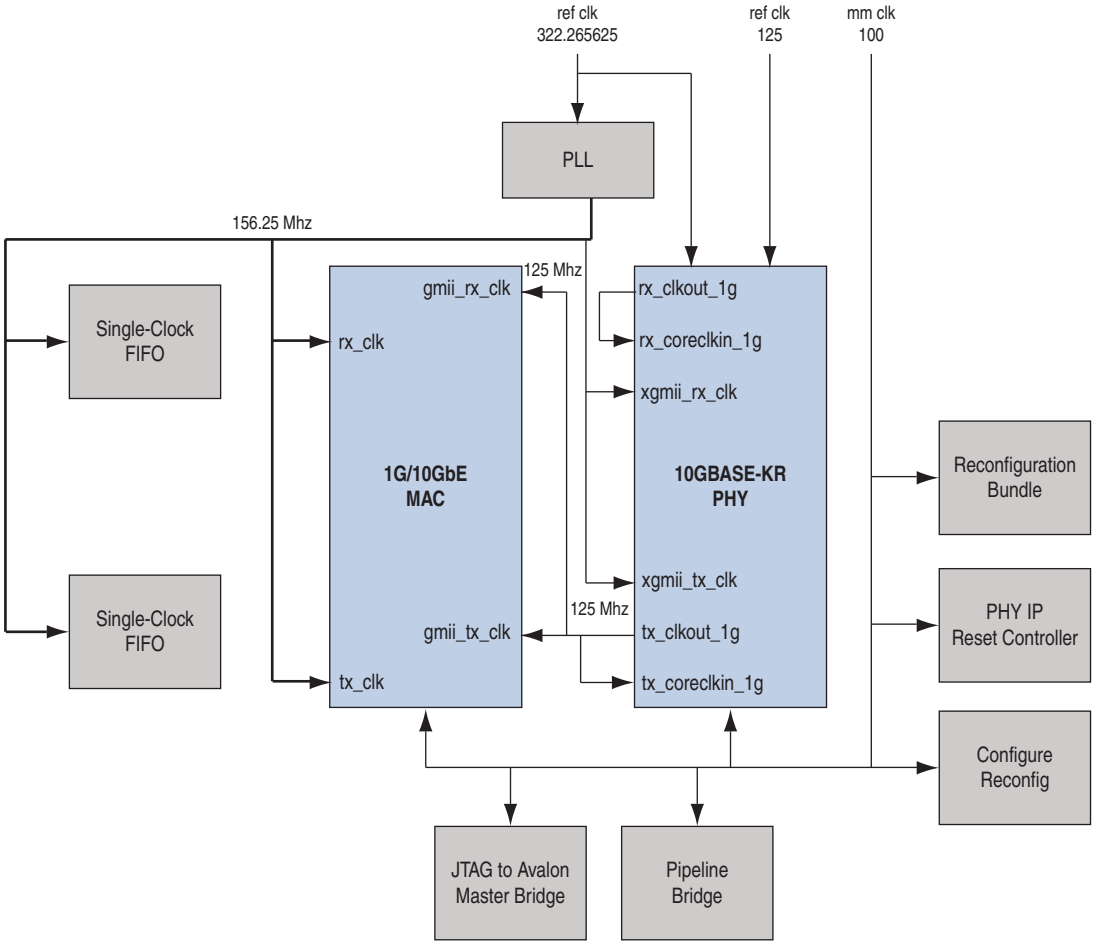

The 1G/10GbE design example comprises the following components:

- 1G/10GbE Ethernet MAC—the MAC IP core with default settings. This IP core includes memory-based statistics counters.
- Backplane Ethernet 10GBASE-KR PHY—the PHY IP core operating as either 1000BASE-X PHY or 10GBASE-R PHY.
- Reconfiguration Bundle—comprises the reconfiguration controller that switches the speed between 1 Gbps and 10 Gbps, and the management ROM that stores MIF information for 1/10GbE PHY or HSSI or hard PCS. This block arbitrates the access to the reconfiguration controller and requests the reconfiguration controller to start streaming MIF information.
- Single-Clock FIFO—Avalon-ST Single-Clock RX and TX FIFO cores that buffer receive and transmit data between the MAC and the client. These FIFO buffers are 64 bits wide and 2048 bits deep. The Single-Clock FIFO operates in store and forward mode, and you can configure it to provide packet-based flushing when an error occurs.



To enable the Avalon-ST Single-Clock FIFO to operate in cut through mode, turn off the **Use store and forward** parameter in the **Avalon-ST Single Clock FIFO** parameter editor.

- PHY IP Reset Controller—configurable IP core that you can use to reset the transceivers. Refer to the *Transceiver PHY Reset Controller IP Core* chapter in the *Altera Transceiver PHY IP Core User Guide* for more information.
- Configure Reconfiguration Block—provides the Avalon-MM interface to drive the reconfiguration bundle component to switch speed.



This component is required only if the automatic speed detection parameter in the Backplane Ethernet 10GBASE-KR PHY is not enabled.

5.2.1. Reconfiguration Bundle Parameters

Table 5–1 lists the parameters for the reconfiguration bundle block.

Table 5–1. Reconfiguration Bundle Parameters

Parameter	Description
PMA_RD_AFTER_WRITE	Always set this parameter to 0.
CHANNELS	The number of channels instantiated for the Backplane Ethernet 10GBASE-KR PHY IP.
PLLS	The number of PLLs. If you turn on the 1G mode in the Backplane Ethernet 10GBASE-KR PHY IP, this value will be two times the value of the CHANNELS parameter.
SYNTH_1588_1G	Set this parameter to 1 if you use 1G mode with the 1588 options turned on in the Backplane Ethernet 10GBASE-KR PHY IP.
SYNTH_1588_10G	Set this parameter to 1 if you use 10G mode with the 1588 options turned on in the Backplane Ethernet 10GBASE-KR PHY IP.
KR_PHY_SYNTH_LT	Set this parameter to 1 if the **Enable Link Training (LT)** option is turned on in the Backplane Ethernet 10GBASE-KR PHY IP.
KR_PHY_SYNTH_AN	Set this parameter to 1 if the **Enable Auto Negotiation (AN)** option is turned on in the Backplane Ethernet 10GBASE-KR PHY IP.
KR_PHY_SYNTH_GIGE	Set this parameter to 1 if you use 1G mode in the Backplane Ethernet 10GBASE-KR PHY IP.

5.2.2. Base Addresses

Table 5–2 lists the design example components that you can configure to suit your verification objectives. To configure the components, write to their registers using the base addresses listed in the table and the register offsets described in the components' user guides.

Table 5–2. Base Addresses of 1G/10GbE Design Example Components

Component	Base Address
1G/10GbE MAC Channel 0	0x00000
1G/10GbE MAC Channel 1	0x20000

Table 5–2. Base Addresses of 1G/10GbE Design Example Components

Component	Base Address
10GBASE-KR Channel 0	0x80000
10GBASE-KR Channel 1	0x80800
Configure Reconfiguration Channel 0	0x80400
Configure Reconfiguration Channel 1	0x80500
RX FIFO (Avalon-ST Single-Clock FIFO) Channel 0	0x10400
TX FIFO (Avalon-ST Single-Clock FIFO) Channel 0	0x10600
RX FIFO (Avalon-ST Single-Clock FIFO) Channel 1	0x30400
TX FIFO (Avalon-ST Single-Clock FIFO) Channel 1	0x30600

This design example uses a 19-bit width address bus to access the base address of components other than the MAC.

For more information about the 10GBASE-KR, refer to the *10GBASE-KR PHY IP Core* chapter in the *Altera Transceiver PHY IP Core User Guide*.

5.3. 1G/10GbE Design Example Files

Figure 5–3 shows the directory structure for the 1G/10GbE design examples and testbenches.

Figure 5–3. 1G/10GbE Design Example Folders

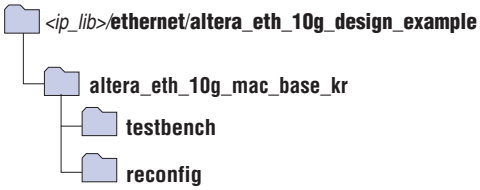

Table 5–3 lists the files in the **..\altera_eth_10g_mac_base_kr** directory.

Table 5–3. 1G/10GbE Design Example Files

File Name	Description
altera_eth_10g_mac_base_kr_top.v	The top-level entity file of the design example for verification in hardware.
altera_eth_10g_mac_base_kr_top.sdc	The Quartus II SDC constraint file for use with the TimeQuest timing analyzer.
setup_proj.tcl	A Tcl script that creates a new Quartus II project and sets up the project environment for your design example.
altera_eth_10g_mac_base_kr.qsys	A Qsys file for the 1G/10GbE MAC and 10G BASE-KR PHY design example with the Quartus II software targeting the Stratix V device.
reconfig.v	A top-level entity file for the transceiver reconfiguration controller IP.

5.4. Creating a New 1G/10GbE Design

You can use the Quartus II software to create a new 1G/10GbE design. Altera provides a Qsys design example file that you can customize to facilitate the development of your 1G/10GbE design.

To create the design, perform the following steps:

1. Launch the Quartus II software and open the **altera_eth_10g_mac_base_kr_top.v** file from the project directory.
2. Open the Quartus II Tcl Console window by pointing to **Utility Windows** on the View menu and then selecting **Tcl Console**. In the Quartus II Tcl Console window, type the following command to set up the project environment and load the necessary pins assignment for Stratix V GX signal integrity development kit board:

   ```
   source setup_proj.tcl↵
   ```

   For more information about the development kit, refer to *Signal Integrity Development Kit, Stratix V GX Edition User Guide*.
3. Launch Qsys from the Tools menu and open the **altera_eth_10g_mac_base_kr.qsys** file.

   At this point you can edit the settings to suit your design using the parameter editor.
4. Click **Finish**.
5. On the **Generation** tab, select either a Verilog HDL or VHDL simulation model and make sure that the **Create HDL design files for synthesis** option is turned on.
6. Click **Generate** to generate the simulation and synthesis files.
7. Launch the MegaWizard Plug-in Manager from the Tools menu. Select **Edit an existing custom megafunction variation** and regenerate **reconfig.v** from the **reconfig** folder.
8. Click **Finish**.

5.5. 1G/10GbE Testbench

Altera provides testbench for you to verify the 1G/10GbE design example. The following sections describe the testbench, its components, and use.

5.5.1. 1G/10GbE Testbench

The testbench operates in loopback mode. Figure 5–4 shows the flow of the packets in the design example.

Figure 5–4. 1G/10GbE Testbench Block Diagram

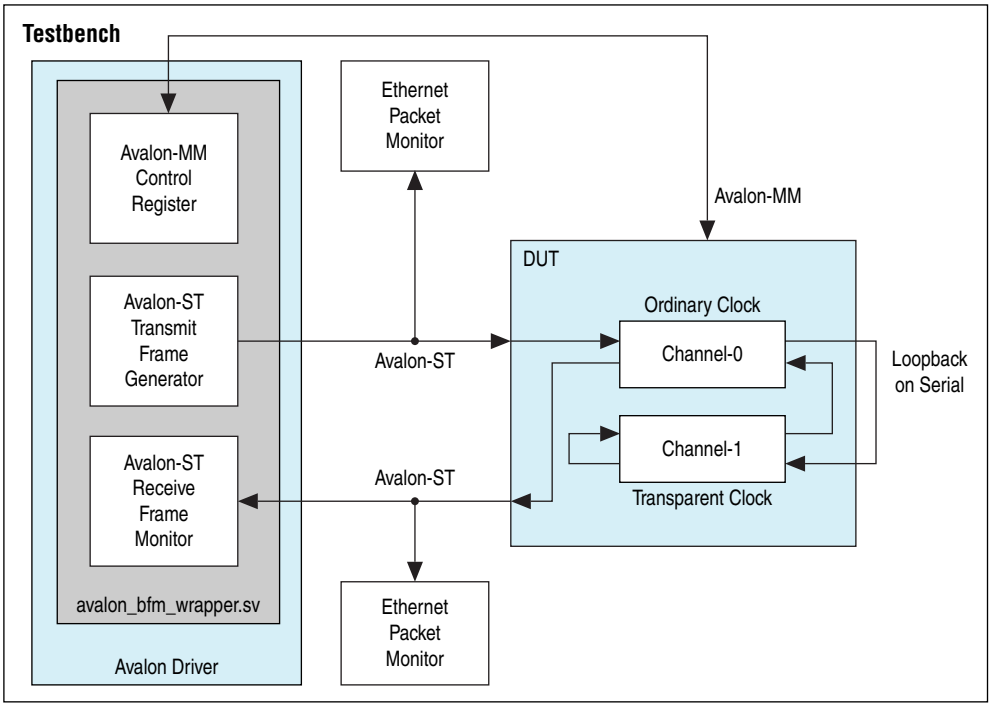

5.5.2. 1G/10GbE Testbench Components

The testbenches comprise the following modules:

- Device under test (DUT)—the design example.
- Avalon driver—uses Avalon-ST master bus functional models (BFMs) to exercise the transmit and receive paths. The driver also uses the Avalon-MM master BFM to access the Avalon-MM interfaces of the design example components.
- Packet monitors—monitors the transmit and receive datapaths, and displays the frames in the simulator console.

5.5.3. 1G/10GbE Testbench Files

The *<ip library>*/**ethernet/altera_eth_10g_design_example/testbench** directory contains the testbench files.

Table 5–4 describes the files that implement the 1G/10GbE testbench.

Table 5–4. 1G/10GbE Testbench Files

File Name	Description
avalon_bfm_wrapper.sv	A wrapper for the Avalon BFMs that the **avalon_driver.sv** file uses.
avalon_driver.sv	A SystemVerilog HDL driver that utilizes the BFMs to exercise the transmit and receive path, and access the Avalon-MM interface.

Table 5–4. 1G/10GbE Testbench Files

File Name	Description
avalon_if_params_pkg.sv	A SystemVerilog HDL testbench that contains parameters to configure the BFMs. Because the configuration is specific to the DUT, you must not change the contents of this file.
avalon_st_eth_packet_monitor.sv	A SystemVerilog HDL testbench that monitors the Avalon-ST transmit and receive interfaces.
eth_mac_frame.sv	A SystemVerilog HDL class that defines the Ethernet frames. The **avalon_driver.sv** file uses this class.
eth_register_map_params_pkg.sv	A SystemVerilog HDL package that maps addresses to the Avalon-MM control registers.
tb_run.tcl	A Tcl script that starts a simulation session in the ModelSim simulation software.
tb.sv	The top-level testbench file. This file includes the customized 1G/10GbE design example, which is the device under test (DUT), a client packet generator, and a client packet monitor along with other logic blocks.
wave.do	A signal tracing macro script for use with the ModelSim simulation software to display testbench signals.

5.5.4. 1G/10GbE Testbench Simulation Flow

The 1G/10GbE testbench provides two modes for simulation:

- 1G/10Gb Ethernet mode
- Backplane-KR mode

By default the testbench runs in 1G/10Gb Ethernet mode.

To switch to backplane-KR mode, open the **tb.sv** file and specify the `MODE_1G10G_KR_BAR` parameter to **0**.

5.5.4.1. 1G/10Gb Ethernet Mode

Upon a simulated power-on reset, the testbench performs the following operations:

1. Initializes the DUT by configuring the following options through the Avalon-MM interface:
   a. Changes both channel 1 and channel 0 to be operating speed at 10 Gbps.
   b. Configures the MAC. In the MAC, enables address insertion on the transmit path and sets the transmit primary MAC address to EE-CC-88-CC-AA-EE.
   c. In the TX and RX FIFO buffers (Avalon-ST Single Clock FIFO core), enables drop on error.
   d. Waits for both the MAC and PHY to be ready to receive data.
2. Starts packet transmission. The testbench sends a total of eight packets:
   a. Three 64-byte basic Ethernet frames
   b. 1518-byte VLAN frame
   c. 1518-byte basic Ethernet frame
   d. 64-byte stacked VLAN frame
   e. 500-byte VLAN frame
   f. 1518-byte stacked VLAN frame
3. Displays the MAC statistics in the transcript panel.
4. Changes the operating speed for both channels.
   a. Changes the operating speed for both channels to 1 Gbps.
   b. Disables clause 37 auto-negotiation for both channels.
   c. Waits for both the MAC and PHY to be ready to receive data
5. Starts packet transmission. The testbench sends a total of eight packets:
   a. Three 64-byte basic Ethernet frames
   b. 1518-byte VLAN frame
   c. 1518-byte basic Ethernet frame
   d. 64-byte stacked VLAN frame
   e. 500-byte VLAN frame
   f. 1518-byte stacked VLAN frame

6. Displays the MAC statistics in the transcript panel.

5.5.4.2. Backplane-KR Mode

To run backplane-KR mode in simulation, perform the following steps:

1. Open the **altera_eth_10g_mac_base_kr.qsys** file and edit the following 10GBASE-KR PHY instances of channels 1 and 0:
   - IP variant = Backplane-KR
   - Turn on **Enable Automatic Speed Detection**.
   - Turn on **Enable Auto-negotiation**.
   - Regenerate the Qsys system.
2. Change the default setting to backplane-KR mode.
3. Run simulation.

Upon a simulated power-on reset, the testbench performs the following operations:

1. Initializes the DUT by configuring the following options via the Avalon-MM interface:
   a. Configures the MAC. In the MAC, enables address insertion on the transmit path and sets the transmit primary MAC address to EE-CC-88-CC-AA-EE.
   b. In the TX and RX FIFO buffers (Avalon-ST Single Clock FIFO core), enables drop on error.
   c. Checks if auto-negotiation status is completed.
   d. Waits for both the MAC and PHY to be ready to receive data.
2. Starts packet transmission. The testbench sends a total of eight packets:
   a. Three 64-byte basic Ethernet frames
   b. 1518-byte VLAN frame
   c. 1518-byte basic Ethernet frame
   d. 64-byte stacked VLAN frame
   e. 500-byte VLAN frame
   f. 1518-byte stacked VLAN frame
3. Displays the MAC statistics in the transcript panel.

5.5.5. Simulating the 1G/10GbE Testbench with the ModelSim Simulator

To use the ModelSim simulator to simulate the 1G/10GbE testbench design, perform the following steps:

1. Copy the *<ip library>*/**ethernet**/**altera_eth_10g_design_example**/**altera_eth_10g_mac_base_kr** directory to your preferred project directory.
2. The design example and testbench files are set to read only. Altera recommends that you turn off the read-only attribute of all design example and testbench files.

3. Launch the Quartus II software and open the **altera_eth_10g_mac_base_kr_top.v** file from the project directory.
4. Open the Quartus II Tcl Console window by pointing to **Utility Windows** on the View menu and then selecting **Tcl Console**. In the Quartus II Tcl Console window, type the following command to set up the project environment:

   ```
   source setup_proj.tcl↵
   ```

5. Launch Qsys from the Tools menu and open **altera_eth_10g_mac_base_kr.qsys** in the File menu.
6. On the **Generation** tab, select Verilog simulation model.

   By default, the system will be running in 1G/10Gb Ethernet mode. To run in backplane-KR mode, edit the following Backplane Ethernet 10GBASE-KR PHY instances of channels 1 and 0:

   - IP variant = Backplane-KR
   - Turn on **Enable Automatic Speed Detection**.
   - Turn on **Enable Auto-negotiation**.

7. Click **Generate** to generate the system.
8. Launch the ModelSim simulator software.
9. Change the working directory to *<project directory>/<design example directory>*/**testbench** in the **File** menu.
10. Run the following command to set up the required libraries, compile the generated IP Functional simulation model, and exercise the simulation model with the provided testbench:

    ```
    do tb_run.tcl↵
    ```

    By default the system will be running in 1G/10Gb Ethernet mode. To run in backplane-KR mode, open the **tb.sv** file and change the `MODE_1G10G_KR_BAR` parameter to **0**, then run the command.
11. The ModelSim transcript pane in Main window displays messages from the testbench reflecting the current task being performed.

Upon a successful simulation, the simulator displays the following `RX Statistics` and `TX Statistics`:

```
# framesOK = 8
# framesErr = 0
# framesCRCErr = 0
# octetsOK = 5142
# pauseMACCtrlFrames = 0
# ifErrors = 0
# unicastFramesOK = 6
# unicastFramesErr = 0
# multicastFramesOK = 1
# multicastFramesErr = 0
# broadcastFramesOK = 1
```

```
# broadcastFramesErr = 0
# etherStatsOctets = 5310
# etherStatsPkts = 8
# etherStatsUndersizePkts = 0
# etherStatsOversizePkts = 0
# etherStatsPkts64Octets = 4
# etherStatsPkts65to127Octets = 0
# etherStatsPkts128to255Octets = 0
# etherStatsPkts256to511Octet = 1
# etherStatsPkts512to1023Octets = 0
# etherStatsPkts1024to1518Octets = 3
# etherStatsPkts1519OtoXOctets = 0
# etherStatsFragments = 0
# etherStatsJabbers = 0
# etherStatsCRCErr = 0
# unicastMACCtrlFrames = 0
# multicastMACCtrlFrames = 0
# broadcastMACCtrlFrames = 0
```



The same message will appear twice if you use 1G/10G Ethernet mode because the system resets the statistic counters after changing the MAC operating speed.

5.5.6. 1G/10GbE Simulation Timing Diagrams

Figure 5–5 shows the reset and initial configuration sequence. The first read or write transaction must be at least one clock cycle after the `csr_reset_reset_n` signal completes.

Figure 5–5. Reset and Configuration

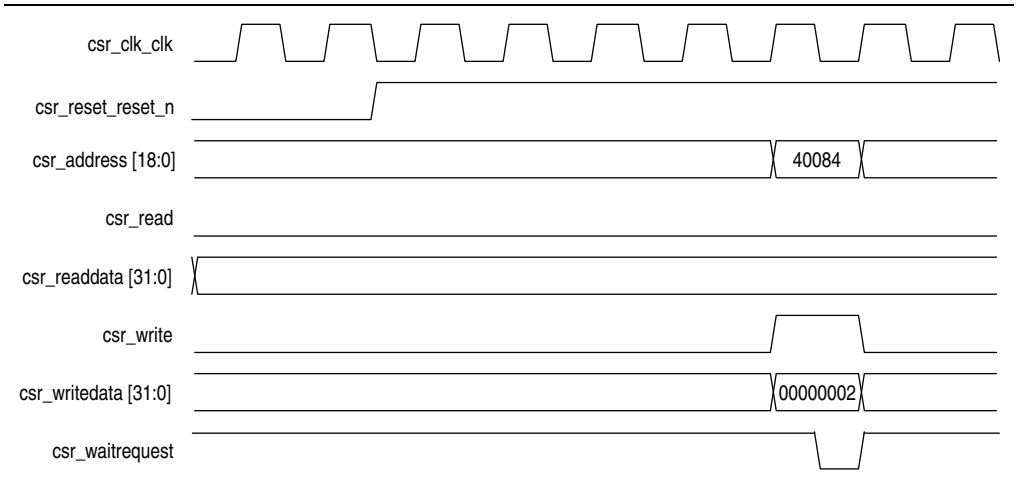

5.6. 1G/10GbE Design Example Compilation

You can use the Quartus II software to compile the 1G/10GbE design example and program the targeted Altera device after a successful compilation.

5.6.1. Compiling the 1G/10GbE Design

Perform the following steps to compile the design and program the device:

1. Copy the *<ip library>*/**altera_eth_10g_design_example/altera_eth_10g_mac_base_kr** directory to your preferred project directory.
2. Launch the Quartus II software and open **altera_eth_10g_mac_base_kr_top.v** from the project directory.
3. Open the Quartus II Tcl Console window by pointing to **Utility Windows** on the View menu then clicking **Tcl Console**. In the Quartus II Tcl Console window, type the following command to set up the project environment and load pin assignments and I/O standard for the development kit:

   ```
   source setup_proj.tcl↵
   ```

   For more information about the development kit, refer to *Signal Integrity Development Kit, Stratix V GX Edition User Guide*.
4. Launch Qsys from the Tools menu and open **altera_eth_10g_mac_base_kr.qsys**.
5. Click **Save** on the File menu.
6. On the **Generation** tab, turn on **Create Synthesis RTL Files**.
7. Click **Generate** to generate the system.
8. Click **Start Compilation** on the Processing menu to compile the design example.
9. Upon a successful compilation, click **Programmer** on the Tools menu to program the device.
10. Launch the MegaWizard Plug-in Manager. Select **Edit an existing custom megafunction variation** and regenerate **reconfig.v** from the **reconfig** folder.

If you want to share the PLL clock, connect the `pll_powerdown` signal from the reset controller to the `pll_powerdown` signal from different channels of the Backplane Ethernet 10GBASE-KR PHY IP.
For example, the `pll_powerdown` signal from reset controller 0 connects to the `pll_powerdown` signal from channel 0 and channel 1 of the Backplane Ethernet 10GBASE-KR PHY IP.

For more information about device programming, refer to *Quartus II Programmer* in volume 3 of the *Quartus II Handbook*.

5.6.2. 1G/10GbE Design Performance and Resource Utilization

Table 5–5 provides the estimated performance and resource utilization of the 1G/10GbE design example obtained by compiling the design with the Quartus II software targeting the Stratix V GX (EP5SGXEA7N2F40C2) device with speed grade –2.

Table 5–5. Stratix V Performance and Resource Utilization

Components	ALM Needed	ALM in Final Placement	Memory Block
1G/10GbE MAC Channel 0	3,272	3,900	9
1G/10GbE MAC Channel 1	3,302	3,891	9
10GBASE-KR Channel 0	547	685	1
10GBASE-KR Channel 1	547	690	1
Reconfiguration Bundle	1,644	1,940	8
JTAG Master	341	424	1
RX FIFO (Avalon-ST Single-Clock FIFO) Channel 0	142	172	2
TX FIFO (Avalon-ST Single-Clock FIFO) Channel 0	140	180	2
RX FIFO (Avalon-ST Single-Clock FIFO) Channel 1	138	176	2
TX FIFO (Avalon-ST Single-Clock FIFO) Channel 1	139	176	2
Other Components	2,628	3,123	8
Total Resource Utilization	12,840	15,357	45

6. 10M-10GbE MAC with IEEE 1588v2 Design Example

This section describes the 10M/100M/1G/10 Gbps Ethernet (10M-10GbE) MAC with IEEE 1588v2 design example, the testbench, and its components.

6.1. Software and Hardware Requirements

Altera uses the following hardware and software to test the 10M-10GbE MAC with IEEE 1588v2 design example and testbench:

- Altera Complete Design Suite 14.0
- Stratix V GX FPGA Development Kit
- ModelSim-SE 10.0b or higher

6.2. 10M-10GbE MAC with IEEE 1588v2 Design Example Components

You can use the 10M-10GbE MAC IP core design example to simulate a complete 10M-10GbE MAC with IEEE 1588v2 design in a simulator. You can compile the design example using the Quartus II software and program the targeted Altera device after a successful compilation.

Figure 6–1 shows the block diagram of a 10M-10GbE MAC with IEEE 1588v2 design example.



For the purpose of simplification, this diagram shows only one of the two channels in the design example. Each channel has its own components but they share the Avalon-MM Master Translator and Reconfiguration Bundle blocks.

Figure 6–1. 10M-10GbE MAC with IEEE 1588v2 Design Example Block Diagram

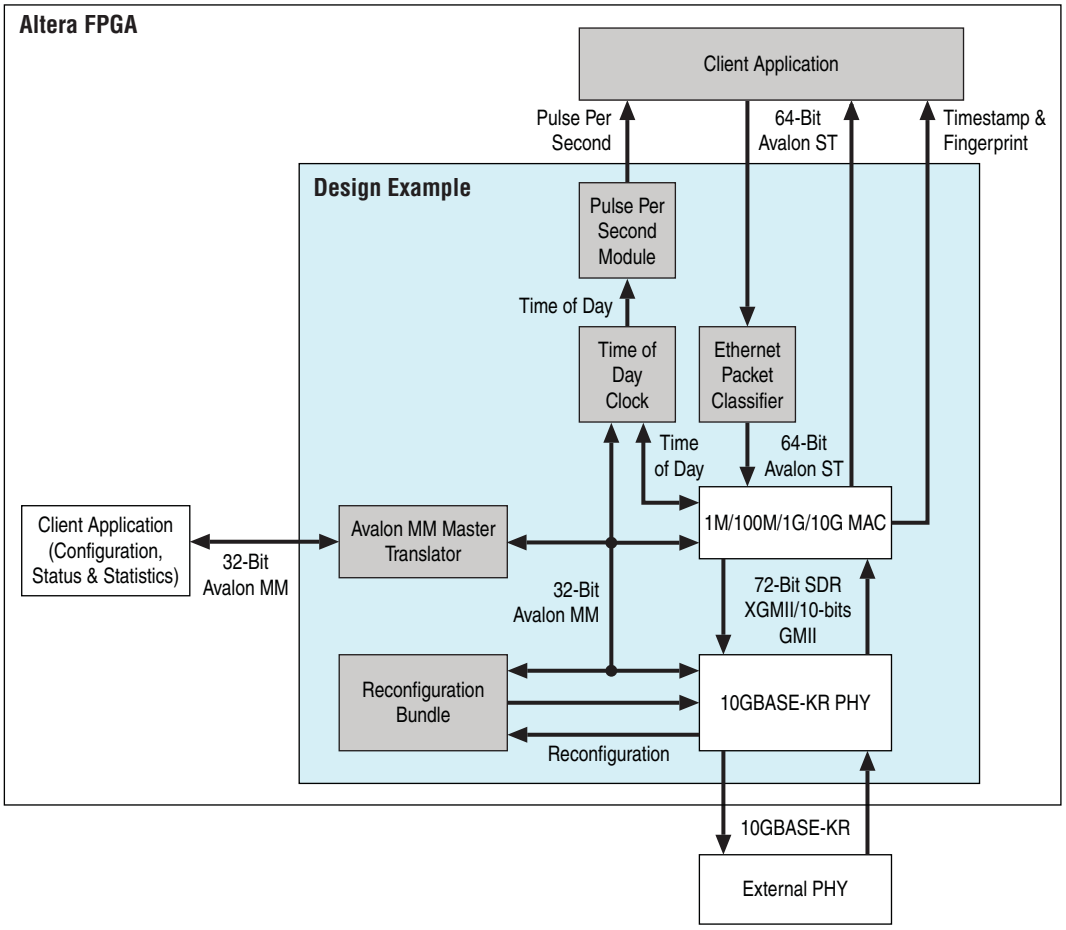

The 10M-10GbE MAC with IEEE 1588v2 design example comprises the following components:

- Altera Ethernet 10M-10GbE design example—the default 1G/10G design that has the following parameter settings:
  - 10M-10GbE Ethernet MAC—the MAC IP core with IEEE 1588v2 option enabled.
  - MDIO and FIFO features turned off.
- Backplane Ethernet 10GBASE-KR PHY—the PHY IP core with IEEE 1588v2 option enabled.
- Reconfiguration Bundle—comprises the reconfiguration controller that switches the speed between 1 Gbps and 10 Gbps, and the management ROM that stores MIF information for 1/10GbE PHY or HSSI or hard PCS. This block arbitrates the access to the reconfiguration controller and requests the reconfiguration controller to start streaming MIF information.
- Ethernet Packet Classifier—decodes the packet type of incoming PTP packets and returns the decoded information to the 10M-10GbE MAC.

- Ethernet ToD Clock—provides 64-bits and/or 96-bits time-of-day to TX and RX of 10GbE Ethernet MAC.
- Pulse Per Second Module—returns pulse per second (pps) to user.
- Avalon-MM Master Translator—provides access to the registers of the following components through the Avalon-MM interface:
  - MAC
  - Backplane Ethernet 10GBASE-KR PHY
  - Transceiver Reconfiguration Controller
  - ToD Clock

6.2.1. Base Addresses

Table 6–1 lists the design example components that you can reconfigure to suit your verification objectives. To reconfigure the components, write to their registers using the base addresses listed in the table and the register offsets described in the components' user guides.

Table 6–1. Base Addresses of 10M-10GbE MAC with IEEE 1588v2 Design Example Components

Component	Base Address
MAC Channel 0	0x00000
MAC Channel 1	0x20000
Backplane Ethernet 10GBASE-KR PHY Channel 0	0x80000
Backplane Ethernet 10GBASE-KR PHY Channel 1	0x80800
Configure Reconfiguration Channel 0	0x80400
Configure Reconfiguration Channel 1	0x80500
Time of Day Clock (1G) Channel 0	0x81100
Time of Day Clock (10G) Channel 0	0x81000
Time of Day Clock (1G) Channel 1	0x81300
Time of Day Clock (10G) Channel 1	0x81200



This design example uses a 19-bit width address bus to access the base address of components other than the MAC.

6.3. 10M-10GbE MAC with IEEE 1588v2 Design Example Files

Figure 6–2 shows the directory structure for the 10M-10GbE MAC with IEEE 1588v2 design examples and testbenches.

Figure 6–2. 10M-10GbE MAC with IEEE 1588v2 Design Example Folders

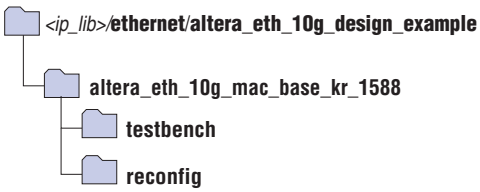

Table 6–2 lists the files in the **..\altera_eth_10g_mac_base_kr_1588** directory.

Table 6–2. 10M-10GbE MAC with IEEE 1588v2 Design Example Files

File Name	Description
altera_eth_10g_mac_base_kr_1588_top.sv	The top-level entity file of the design example for verification in hardware.
altera_eth_10g_mac_base_kr_1588_top.sdc	The Quartus II SDC constraint file for use with the TimeQuest timing analyzer.
altera_eth_10g_mac_base_kr_1588.qsys	A Qsys file for the 10M-10GbE MAC and 10GBASE-KR PHY design example with IEEE 1588v2 option enabled.

6.4. Creating a New 10M-10GbE MAC with IEEE 1588v2 Design

You can use the Quartus II software to create a new 10M-10GbE MAC with IEEE 1588v2 design. Altera provides a Qsys design example file that you can customize to facilitate the development of your 10M-10GbE MAC with IEEE 1588v2 design.

To create the design, perform the following steps:

1. Launch the Quartus II software and open a new Quartus II Project.
2. Run **add_design_example_files.tcl** in the Quartus II software to add the required design example files to the project.
3. Launch Qsys from the Tools menu and open the **altera_eth_10g_mac_base_kr_1588.qsys** file.
4. Turn off the additional module under the **Use** column if your design does not require it. This action disconnects the module from the 10M-10GbE MAC with IEEE 1588v2 system.
5. Double-click on **eth_10g_design_example_0** and **eth_10g_design_example_1** to launch the parameter editor.
6. Specify the required parameters in the parameter editor.
7. Click **Finish**.
8. On the **Generation** tab, select either a Verilog HDL or VHDL simulation model and make sure that the **Create HDL design files for synthesis** option is turned on.
9. Click **Generate** to generate the simulation and synthesis files.
10. Launch the MegaWizard Plug-in Manager from the Tools menu. Select **Edit an existing custom megafunction variation** and regenerate **reconfig.v** from the **reconfig** folder.
11. Click **Finish**.

6.5. 10M-10GbE with IEEE 1588v2 Testbench

Altera provides testbench for you to verify the 10M-10GbE with IEEE 1588v2 design example. The following sections describe the testbench, its components, and use.

6.5.1. 10M-10GbE with IEEE 1588v2 Testbench

The testbench operates in loopback mode. Figure 6–3 shows the flow of the packets in the design example.

Figure 6–3. Testbench Block Diagram

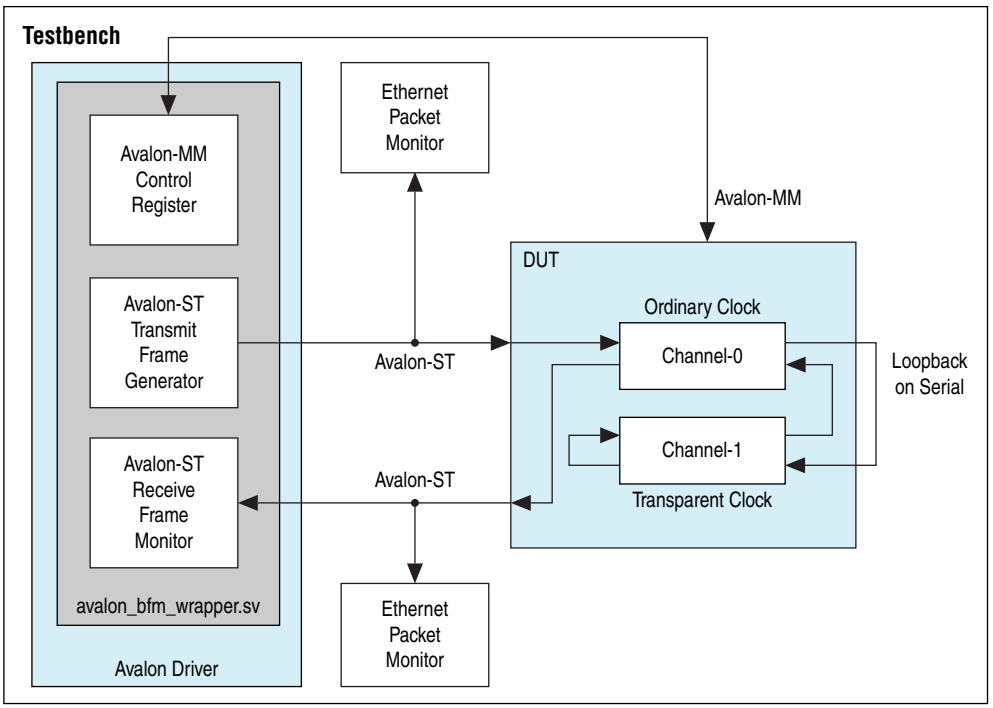

6.5.2. 10M-10GbE with IEEE 1588v2 Testbench Components

The testbenches comprise the following modules:

- Device under test (DUT)—the design example.
- Avalon driver—uses Avalon-ST master bus functional models (BFMs) to exercise the transmit and receive paths. The driver also uses the master Avalon-MM BFM to access the Avalon-MM interfaces of the design example components.
- Packet monitors—monitors the transmit and receive datapaths, and displays the frames in the simulator console.

6.5.3. 10M-10GbE MAC with IEEE 1588v2 Testbench Files

The *<ip library>*/**ethernet/altera_eth_10g_design_example/testbench** directory contains the testbench files.

Table 6–3 describes the files that implement the 10M-10GbE MAC with IEEE 1588v2 testbench.

Table 6–3. 10M-10GbE MAC with IEEE 1588v2 Testbench Files

File Name	Description
avalon_bfm_wrapper.sv	A wrapper for the Avalon BFMs that the **avalon_driver.sv** file uses.
avalon_driver.sv	A SystemVerilog HDL driver that utilizes the BFMs to exercise the transmit and receive path, and access the Avalon-MM interface.
avalon_if_params_pkg.sv	A SystemVerilog HDL testbench that contains parameters to configure the BFMs. Because the configuration is specific to the DUT, you must not change the contents of this file.
avalon_st_eth_packet_monitor.sv	A SystemVerilog HDL testbench that monitors the Avalon-ST transmit and receive interfaces.
default_test_params_pkg.sv	A SystemVerilog HDL package that contains the default parameter settings of the testbench.
eth_mac_frame.sv	A SystemVerilog HDL class that defines the Ethernet frames. The **avalon_driver.sv** file uses this class.
eth_register_map_params_pkg.sv	A SystemVerilog HDL package that maps addresses to the Avalon-MM control registers.
ptp_timestamp.sv	A SystemVerilog HDL class that defines the timestamp in the testbench.
tb_run.tcl	A Tcl script that starts a simulation session in the ModelSim simulation software.
tb_testcase.sv	A SystemVerilog HDL testbench file that controls the flow of the testbench.
tb_top.sv	The top-level testbench file. This file includes the customized 10M-10GbE MAC, which is the device under test (DUT), a client packet generator, and a client packet monitor along with other logic blocks.
wave.do	A signal tracing macro script for use with the ModelSim simulation software to display testbench signals.

6.5.4. 10M-10GbE MAC with IEEE 1588v2 Testbench Simulation Flow

Upon a simulated power-on reset, the testbench performs the following operations:

1. Initializes the DUT by configuring the following options through the Avalon-MM interface:
   - Changes both channel 1 and channel 0 to be operating speed at 10 Gbps.
   - Waits for both the MAC and PHY to be ready.
   - Configures the MAC. In the MAC, enables address insertion on the transmit path and sets the transmit and receive primary MAC address to EE-CC-88-CC-AA-EE. Also enables CRC insertion on transmit path.
   - Configures Timestamp Unit in the MAC, by setting periods and path delay adjustments of the clocks.
   - Configures ToD clock by loading a predefined time value.
   - Configures clock mode of channel-0 Packet Classifier to Ordinary Clock mode, and channel-1 Packet Classifier to End-to-end Transparent Clock mode.
2. Starts packet transmission. The testbench sends a total of seven packets:
   - 64-byte basic Ethernet frames
   - 1-step PTP Sync message over Ethernet
   - 1-step PTP Sync message over UDP/IPv4 with VLAN tag
   - 2-step PTP Sync message over UDP/IPv6 with stacked VLAN tag
   - 1-step PTP Delay Request message over Ethernet
   - 2-step PTP Delay Request message over UDP/IPv4 with VLAN tag
   - 1-step PTP Delay Request message over UDP/IPv6 with stacked VLAN tag
3. Displays the MAC statistics on the transcript panel.
4. Changes the operating speed for both channels to 1 Gbps, 100 Mbps, and 10 Mbps.
5. Repeats steps 1 to 3.
6. Stops packet transmission and display statistics counter of the MAC.

6.5.5. Simulating 10M-10GbE MAC with IEEE 1588v2 Testbench with ModelSim Simulator

To use the ModelSim simulator to simulate the testbench design, follow these steps:

1. Copy the respective design example directory to your preferred project directory: **altera_eth_10g_mac_base_kr_1588** from *<ip library>*/**ethernet**/**altera_eth_10g_design_example**.
2. Launch Qsys from the Tools menu and open the **altera_eth_10g_mac_base_kr_1588.qsys** file.
3. On the **Generation** tab, select either a Verilog HDL or VHDL simulation model.
4. Click **Generate** to generate the simulation and synthesis files.

5. Run the following command to set up the required libraries, to compile the generated IP Functional simulation model, and to exercise the simulation model with the provided testbench:

```
do tb_run.tcl↵
```

7. Functional Description

The 10GbE MAC IP core handles the flow of data between a client and Ethernet network through a 10-Gbps Ethernet PHY. On the transmit path, the MAC accepts client frames and constructs Ethernet frames by inserting various control fields, such as checksums before forwarding them to the PHY. Similarly, on the receive path, the MAC accepts Ethernet frames via a PHY, performs checks, and removes the relevant fields before forwarding the frames to the client. You can configure the MAC to collect statistics on both transmit and receive paths. You can opt to use either 10GbE MAC, 1G/10GbE MAC, or 10M-10GbE MAC variant.

This chapter describes the MAC IP core, its architecture, interfaces, data paths, registers, and interface signals.

7.1. Architecture

The 10GbE MAC IP core is a composition of three blocks: MAC receiver (MAC RX), MAC transmitter (MAC TX), and Avalon-MM bridge. The MAC RX and MAC TX handle data flow between the client and Ethernet network.

The Avalon-MM bridge provides a single interface to all Avalon-MM interfaces within the MAC, which allows a host to access 32-bit configuration and status registers, and statistics counters.

Figure 7–1, Figure 7–2, and Figure 7–3 show the block diagrams of the 10GbE MAC, 1G/10GbE MAC, and 10M-10GbE MAC variants of the MAC IP core.

Figure 7–1. 10GbE MAC IP Core Block Diagram

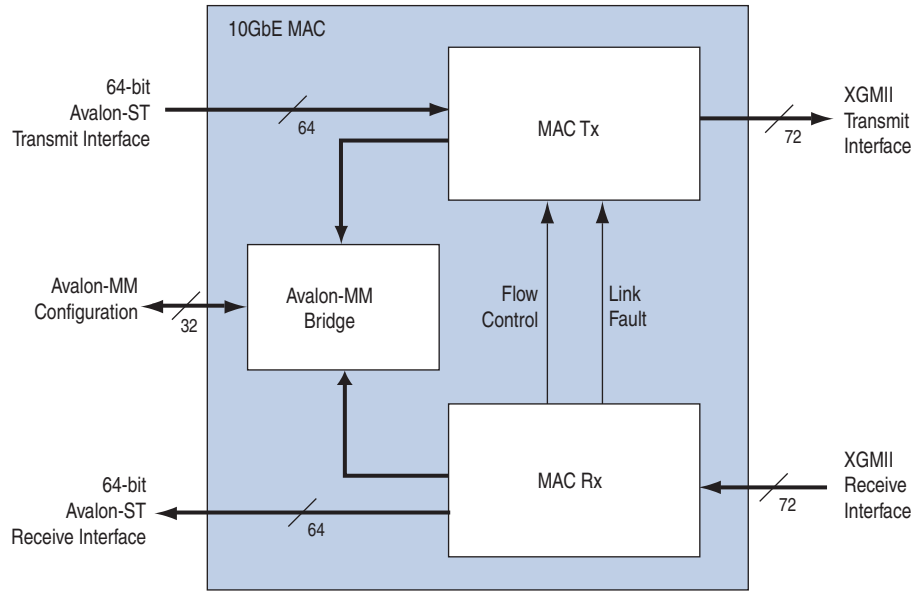

Figure 7–2. 1G/10GbE MAC IP Core Block Diagram

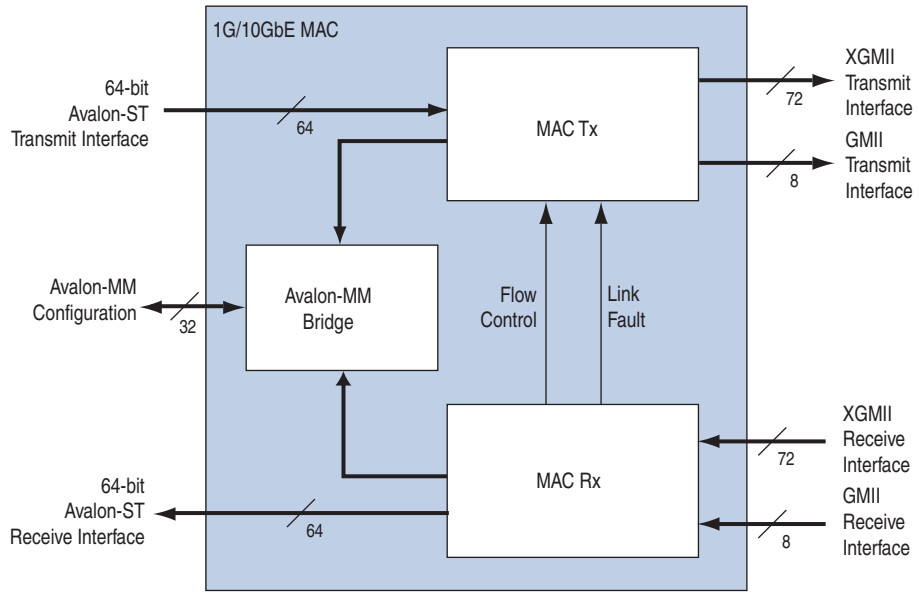

Figure 7–3. 10M-10GbE MAC IP Core Block Diagram

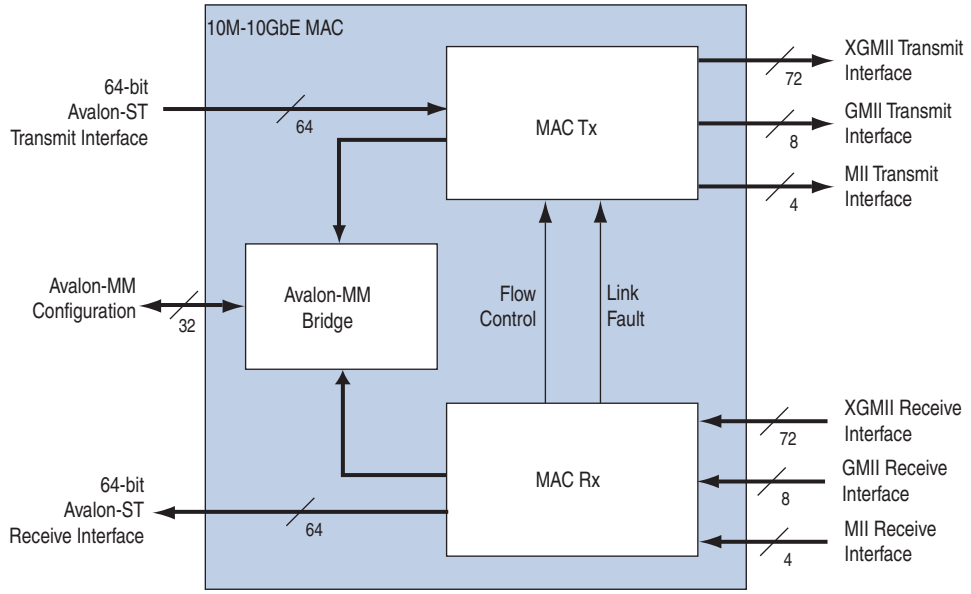

7.2. Interfaces

The 10GbE MAC IP core offers the following modes:

- Avalon-ST transmit and receive interface on the client side
- Avalon-MM control and status register interface
- SDR XGMII transmit and receive interface on the network side (10GbE MAC)
  or
  GMII or SDR XGMII transmit and receive interface on the network side (1G/10G MAC)
  or
  MII, GMII or SDR XGMII transmit and receive interface on the network side (10M-10G MAC)

7.2.1. Avalon-ST Interface

The client-side interface of the MAC employs the Avalon-ST protocol, which is a synchronous point-to-point, unidirectional interface that connects the producer of a data stream (source) to a consumer of the data (sink). The key properties of this interface include:

- Frame transfers marked by `startofpacket` and `endofpacket` signals.
- Signals from source to sink are qualified by the `valid` signal.
- Errors marking a current packet are aligned with the end-of-packet cycle.
- Use of the `ready` signal by the sink to backpressure the source. The source must respond to the `ready` signal from sink by deasserting the `valid` signal after a fixed number of cycles defined by the ready latency.

In the MAC, the Avalon-ST interface acts as a sink in the transmit datapath and source in the receive datapath. These interfaces are 64 bits wide and support packets, backpressure, and error. The ready latency on these interfaces is 0 and the MAC expects the `empty` signal to contain a valid value.

For more information about the Avalon-ST interface, refer to the *Avalon Interface Specifications*.

7.2.2. SDR XGMII

The network-side interface of the 10GbE MAC implements the SDR version of the XGMII protocol. The SDR XGMII consists of 64-bit data bus and 8-bit control bus operating at 156.25 MHz. The data bus carries the MAC frame; the most significant byte occupies the least significant lane.

7.2.3. GMII

The network-side interface of the 1GbE MAC implements the GMII protocol for the 1Gpbs mode. The GMII defines speeds up to 1000 Mbit/s, implemented using an eight-bit data interface operating at 125 MHz.

7.2.4. MII

The network-side interface of the 10M/100MbE MAC implements the MII protocol for the 10 Mbps and 100 Mbps mode. The MII defines speeds up to 10Mbit/s and 100Mbit/s. The speed is implemented using a four-bit data interface operating at 125 MHz, with the clock enable signal to divide the clock to 25 MHz for 100 Mbps and 2.5 MHz for 10 Mbps.

7.2.5. Avalon-MM Control and Status Register Interface

The Avalon-MM control and status register interface is an Avalon-MM slave port. This interface uses word addressing which provides host access to 32-bit configuration and status registers, and statistics counters.

7.3. Frame Types

The MAC supports the following frame types:

- Basic Ethernet frames, including jumbo frames.
- VLAN and stacked VLAN frames.
- Control frames, which include pause and PFC frames.

Refer to Appendix A, Frame Format for the frame formats and fields.

7.4. Transmit Datapath

The MAC TX receives the client payload data with the destination and source addresses, and appends various control fields. Depending on the MAC configuration, the MAC TX could perform the following tasks: pads the payload to satisfy the minimum Ethernet frame payload of 64 bytes, calculates and appends the CRC-32 field, modifies the source address, inserts inter-packet gap bytes, and accepts client-defined preamble bytes.

To perform these tasks, the MAC TX deasserts the `avalon_st_tx_ready` signal during the frame transfer.

Figure 7–4 shows the typical flow of frame through the MAC TX.

Figure 7–4. Typical Client Frame at Transmit Interface

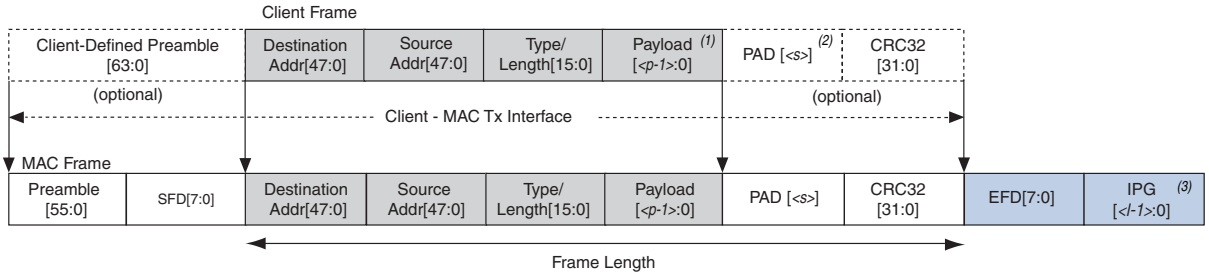

Notes to Figure 7–4:

(1) <*p*> = payload size = 0–1500 bytes
(2) <*s*> = padding bytes = 0–46 bytes
(3) <*I*> = number of IPG bytes

7.4.1. Frame Payload Padding

The MAC TX inserts pad bytes (0x00) into transmit frames when the payload length doesn't meet the minimum length required:

- 46 bytes for basic frames
- 42 bytes for VLAN tagged frames
- 38 bytes for stacked VLAN tagged frames

You can disable pad bytes insertion by setting the tx_padins_control register to 0. When disabled, the MAC IP forwards the frames to the receiver without checking the frame length. Ensure that the minimum payload length is met; otherwise the current frame may get corrupted. You can check for undersized frames by referring to the statistics collected.

7.4.2. Address Insertion

By default, the MAC TX retains the source address received from the client. You can configure the MAX TX to replace the source address with the primary MAC address specified in the tx_addrins_macaddr0 and tx_addrins_macaddr1 registers by setting the bit tx_addrins_control[0] to 1.

7.4.3. Frame Check Sequence (CRC-32) Insertion

The MAC TX computes and inserts CRC-32 checksum into transmit frames. The MAC TX computes the CRC-32 checksum over the frame bytes that include the source address, destination address, length, data, and pad bytes. The CRC checksum computation excludes the preamble, SFD, and FCS bytes.

The following equation shows the CRC polynomial, as specified in the IEEE 802.3 Standard:

$$FCS(X) = X^{32} + X^{26} + X^{23} + X^{22} + X^{16} + X^{12} + X^{11} + X^{10} + X^{8} + X^{7} + X^{5} + X^{4} + X^{2} + X^{1} + 1$$

The 32-bit CRC value occupies the FCS field with X^{31} in the least significant bit of the first byte. The CRC bits are thus received in the following order: X^{31}, X^{30},..., X^{1}, X^{0}.

You can disable this function by setting the bit tx_crcins_control[1] to 0. You can also choose to omit the logic for CRC computation and insertion to save resources. When you disable or omit the CRC computation and insertion, the MAC does not append the CRC bits to the automatically generated pause frames.

Figure 7–5 on page 7–7 shows the timing diagram of the Avalon-ST transmit and receive interface where the FCS insertion function is on. The MAC TX receives the frame without CRC-32 checksum and inserts CRC-32 checksum (4EB30AF4) into the frame. The frame is then loopback to the receive datapath with the avalon_st_rx_data[63:0] containing the CRC-32 checksum.

Figure 7–5. Avalon-ST Transmit and Receive Interface with CRC-32 Checksum Insertion

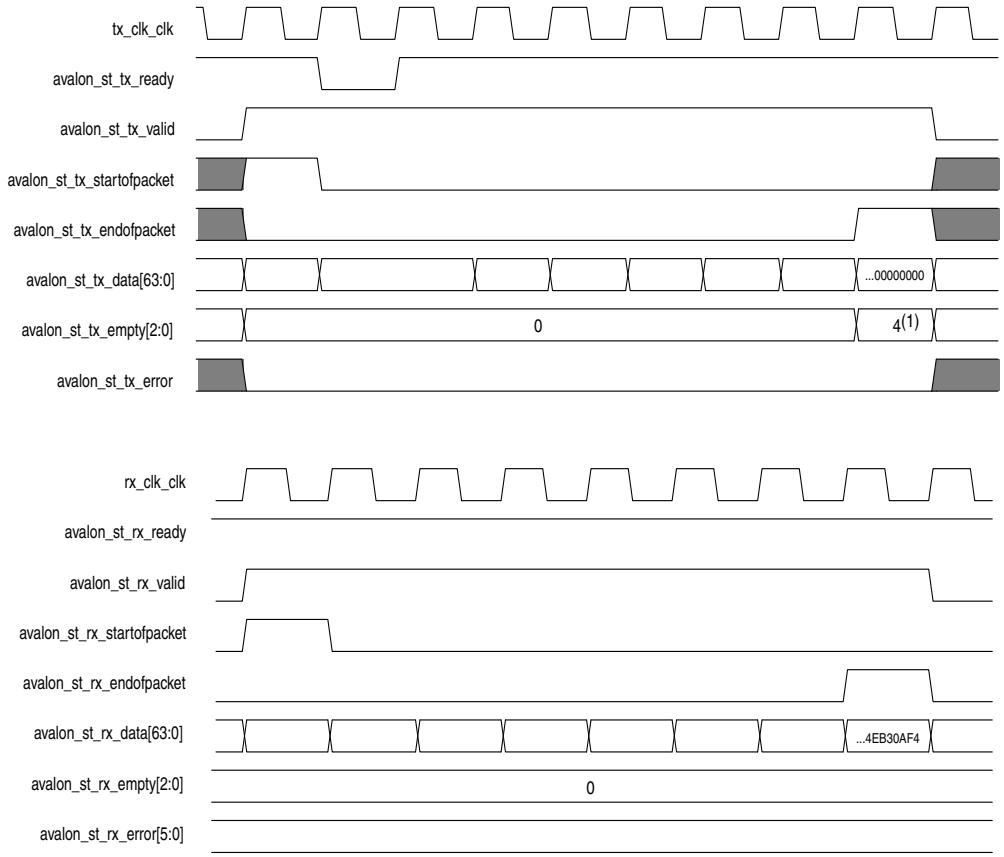

Note to Figure 7–5:

(1) This value (which varies depending on the frame size) indicates the number of symbols that are empty during the cycles that mark the end of a frame.

Figure 7–6 shows the timing diagram of the Avalon-ST transmit and receive interface where the FCS insertion function is off. The MAC TX receives the frame which contains a CRC-32 checksum (4EB30AF4) and forwards the frame without performing CRC computation. The frame with the same CRC-32 field is then loopback to the receive datapath.

Figure 7–6. Avalon-ST Transmit and Receive Interface with CRC-32 Computation Disabled

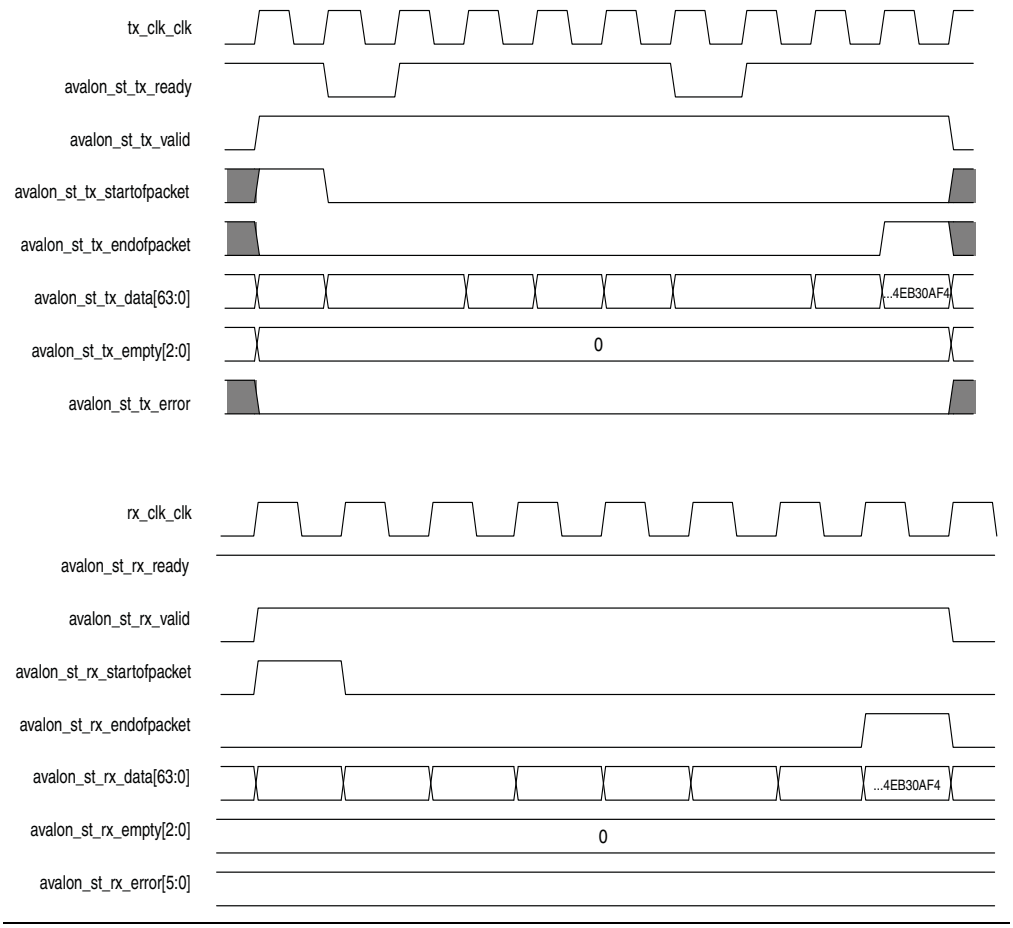

7.4.4. XGMII Encapsulation

The 10GbE MAC TX inserts 7-byte preamble, 1-byte SFD and 1-byte EFD (0xFD) into frames received from the client. When you enable the preamble passthrough mode, the 10GbE MAC TX accepts 8-byte client-defined preamble in the frames received from the client and inserts a 1-byte EFD into the frames. For XGMII encapsulation, the first byte of the preamble data is converted to a 1-byte START (0xFB).

An underflow could occur on the Avalon-ST transmit interface. An underflow occurs when the `avalon_st_tx_valid` signal is deasserted in the middle of frame transmission. When this happens, the 10GbE MAC TX inserts an error character |E| into the frame and forwards the frame to the XGMII.

7.4.5. Inter-Packet Gap Generation and Insertion

The MAC TX maintains an average IPG between transmit frames as required by the IEEE 802.3 Ethernet standard. The average IPG is maintained at 96 bit times (12 byte times) using the deficit idle count (DIC). The MAC TX's decision to insert or delete idle bytes depends on the value of the DIC; the DIC is bounded between a minimum value of zero and maximum value of three. Averaging the IPG ensures that the MAC utilizes the maximum available bandwidth.

7.4.6. SDR XGMII Transmission

To comply with the IEEE 802.3 Clause 46 Ethernet standard, the MAC TX ensures the following when transmitting frames on the SDR XGMII:

- Aligns the first byte of the frame to either lane 0 or lane 4 of the interface.
- Performs endian conversion. Transmit frames received from the client on the Avalon-ST interface are big endian. Frames transmitted on the SDR XGMII are little endian; the MAC TX therefore transmits frames on this interface from the least significant byte.

Figure 7–7 shows the timing for the transmit frames on the Avalon-ST interface and the SDR XGMII. By comparing the data value in D3, the SDR XGMII performs endian conversion by transmitting the frames from the least significant byte.

Figure 7–7. Endian Conversion

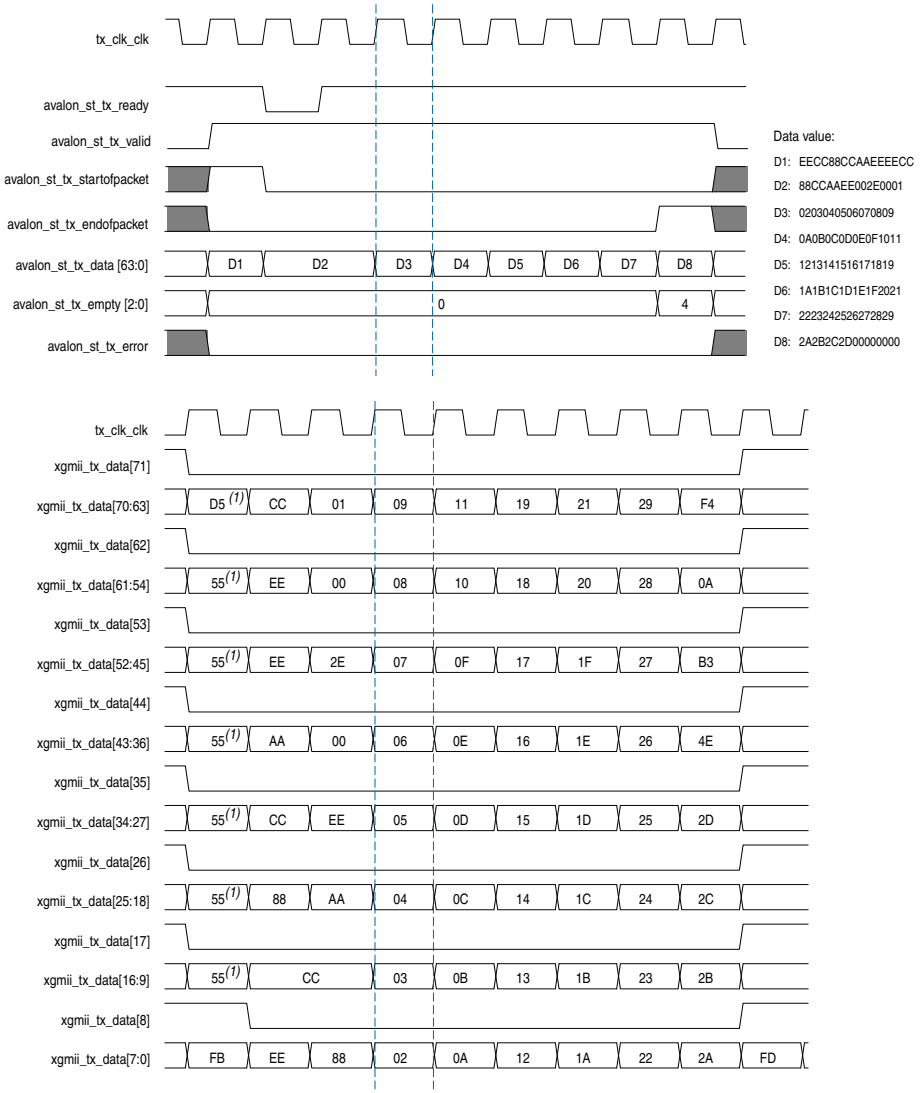

Note to Figure 7–7:

(1) In the preamble passthrough mode, the MAC TX frame starts with a 1-byte START and a 7-byte client-defined preamble.

7.4.7. Unidirectional Feature

The unidirectional feature is an option that you can enable on the TX datapath. This feature is implemented as specified in the IEEE802.3 specification, Clause 66.

When you enable this feature, two output ports—unidirectional_en, unidirectional_remote_fault_dis— and two register fields—unidir_en (Bit 0), UniDirRmtFault_Dis (Bit 1)—are accessible to control the TX XGMII interface.

Table 7–1. Register Field and Link Status

Bit 0 Register	Bit 1 Register	Link Status	TX XGMII Interface Behavior
Don't care	*Don't care*	No link fault	Continue to allow normal packet transmission.
0	*Don't care*	Local fault	Immediately override the current content with remote fault sequence.
1	0	Local fault	Continue to send packet if there is one. Otherwise, override the IPG/IDLE bytes with remote fault sequence. At least a full column of IDLE (four IDLE characters) must precede the remote fault sequence.
1	1	Local fault	Continue to allow normal packet transmission (similar to no link fault).
0	*Don't care*	Remote fault	Immediately override the current content with IDLE control characters.
1	*Don't care*	Remote fault	Continue to allow normal packet transmission (similar to no link fault).



Refer to "MAC Registers" on page 8–2 and "Unidirectional Signals" on page 9–12 for more information about the unidirectional mode registers and signals.

7.5. Receive Datapath

The MAC RX receives Ethernet frames from the SDR XGMII and forwards the payload with relevant frame fields to the client after performing checks and filtering invalid frames. Some frame fields are optionally removed from the frame before the MAC RX forwards the frame to the client.



If a frame has a packet size of less than 12 bytes, an error may occur whereby the frames may be discarded or tagged and forwarded as an error frame.

Figure 7–8 shows the typical flow of frame through the MAC RX.

Figure 7–8. Typical Client Frame at Receive Interface

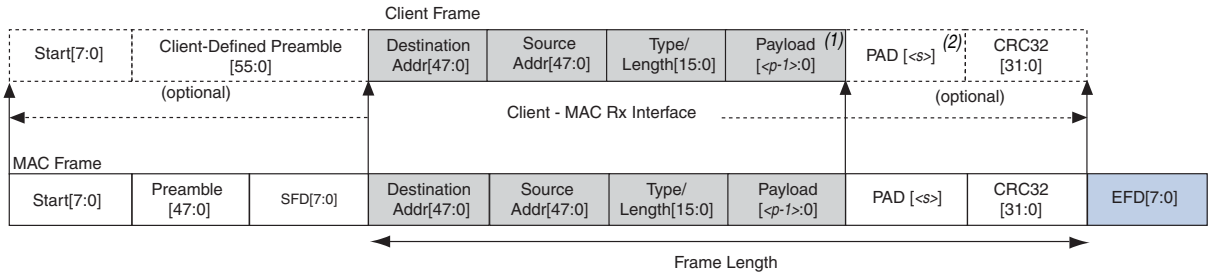

7.5.1. Minimum Inter-Packet Gap

Table 7–2 shows the minimum IPG the MAC can receive for the different interfaces.

Table 7–2. Minimum IPG for the MAC on the Receive Path

Interfaces	Minimum IPG (Bytes)
XGMII (10 Gbps)	5
GMII (1 Gbps)	8
MII (10 Mbps and 100 Mbps)	6

7.5.2. XGMII Decapsulation

In the receive datapath, the MAC RX decodes the data lanes coming through the SDR XGMII. The MAC RX expects the first byte of the receive frame to be in either lane 0 (most significant byte) or lane 4. The receive frame must also be preceded by a column of idle bytes or an ordered set such as a local fault. A receive frame that does not satisfy these conditions is invalid and the MAC RX drops the frame.

The MAC RX then checks the sequence of the frame. The frame must begin with a 1-byte START, 6-byte preamble, and 1-byte SFD. Otherwise, the MAC RX considers the frame invalid and drops it. For all valid frames, the MAC RX removes the START, preamble, SFD, and EFD bytes and ensures that the first byte of the frame aligns to byte 0.

When you enable the preamble passthrough mode, the MAC RX only checks for the following conditions: the frame begins with a 1-byte START and the minimum length of the frame including the START and client-defined preamble is 12 bytes.

For frames that do not fulfill these conditions, the MAC RX considers the frames invalid and drops them. For all valid frames, the MAC RX removes the EFD byte and ensures that the first byte of the frame aligns to byte 0. The MAC RX forwards the START and client-defined preamble to the client.

7.5.3. Frame Check Sequence (CRC-32) Checking

The CRC polynomial, as specified in the IEEE 802.3 Standard, is shown in the following equation:

$$FCS(X) = X^{32} + X^{26} + X^{23} + X^{22} + X^{16} + X^{12} + X^{11} + X^{10} + X^{8} + X^{7} + X^{5} + X^{4} + X^{2} + X^{1} + 1$$

The 32-bit CRC field is received in the following order: X^{31}, X^{30},..., X^{1}, X^{0}, where X^{31} is the MSB of FCS field and occupies the LSB position on first FCS byte field.

If a CRC-32 error is detected, the MAC RX marks the frame invalid by setting `avalon_st_rx_error[1]` to 1 and forwards the frame to the client.

7.5.4. Address Checking

The MAC RX can accept frames with the following address types:

- Unicast address—bit 0 of the destination address is 0.
- Multicast address—bit 0 of the destination address is 1.
- Broadcast address—all 48 bits of the destination address are 1.

The MAC RX always accepts broadcast frames. By default, it also receives all unicast and multicast frames unless configured otherwise in the `EN_ALLUCAST` and `EN_ALLMCAST` bits of the `rx_frame_control` register.

When the `EN_ALLUCAST` bit is set to 0, the MAC RX filters unicast frames received. The MAC RX accepts only unicast frames if the destination address matches the primary MAC address specified in the `rx_frame_addr0` and `rx_frame_addr1` registers. If any of the supplementary address bits are set to 1 (`EN_SUPP0/1/2/3` in the `rx_frame_control` register), the MAC RX also checks the destination address against the supplementary addresses in use.

When the `EN_ALLMCAST` bit is set to 0, the MAC RX drops all multicast frames. This condition doesn't apply to global multicast pause frames.

7.5.5. Frame Type Checking

The MAC RX checks the length/type field to determine the frame type:

- Length/type < 0x600—The field represents the payload length of a basic Ethernet frame. The MAC RX continues to check the frame and payload lengths.

- Length/type >= 0x600—The field represents the frame type.
  - Length/type = 0x8100—VLAN or stacked VLAN tagged frames. The MAC RX continues to check the frame and payload lengths.
  - Length/type = 0x8808—Control frames. The next two bytes are the Opcode field which indicates the type of control frame. For pause frames (Opcode = 0x0001) and PFC frames (Opcode = 0x0101), the MAC RX proceeds with pause frame processing (refer to "Congestion and Flow Control" on page 7–17). By default, the MAC RX drops all control frames. If configured otherwise (`FWD_CONTROL` bit in the `rx_frame_control` register = 1), the MAC RX forwards control frames to the client.
  - For other field values, the MAC RX forwards the receive frame to the client.

If the length/type is less than payload, the MAC RX considers the frame to have excessive padding and does not assert `avalon_st_rx_error[4]`. For detailed information about the MAC behavior, refer to Table 7–3.

Table 7–3. MAC Behavior for Different Frame Types

Category	Packet Size	Length/Type = Payload	Length/Type > Payload	Length/Type < Payload	MAC Behavior	
					Frame Drop	avalon_st_rx_error [x]
Normal Packet	65–1518	Yes	No	No	No	No
		No	Yes	No	No	avalon_st_rx_error[4] = 1
		No	No	Yes	No	No
Undersized	Packet < 64	Yes	No	No	No	avalon_st_rx_error[2] = 1
		No	Yes	No	No No	avalon_st_rx_error[2] = 1 avalon_st_rx_error[4] = 1
		No	No	Yes	No	avalon_st_rx_error[2] = 1
Oversized	1518 < Packet < 1535	Yes	No	No	No	avalon_st_rx_error[3] = 1
		No	Yes	No	No No	avalon_st_rx_error[3] = 1 avalon_st_rx_error[4] = 1
		No	No	Yes	No	avalon_st_rx_error[3] = 1

7.5.6. Length Checking

The MAC RX checks the frame and payload lengths of basic, VLAN tagged, and stacked VLAN tagged frames.

The frame length must be at least 64 (0x40) bytes and not exceed the following maximum value for the different frame types:

- Basic—The value in the `rx_frame_maxlength` register.
- VLAN tagged—The value in the `rx_frame_maxlength` register plus four bytes.
- Stacked VLAN tagged—The value in the `rx_frame_maxlength` register plus eight bytes.

The MAC RX keeps track of the actual payload length as it receives a frame and checks the actual payload length against the length/type or client length/type field. The payload length must be between 46 (0x2E) and 1500 (0x5DC). For VLAN and VLAN stacked frames, the minimum payload length is 42 (0x2A) or 38 (0x26) respectively and not exceeding the maximum value of 1500 (0x5DC).

The MAC RX does not drop frames with invalid length. For the following length violations, the MAC RX sets the corresponding error bit to 1:

- `avalon_st_rx_error[2]`—Undersized frame
- `avalon_st_rx_error[3]`—Oversized frame
- `avalon_st_rx_error[4]`—Invalid payload length, the actual payload length doesn't match the value of the length/type field

7.5.7. CRC-32 and Pad Removal

By default, the MAC RX forwards receive frames to the client without removing pad bytes from the frames. You can, however, configure the MAC RX to remove pad bytes by setting the bit `rx_padcrc_control`[1] to 1. When the bit is set to 1, the MAC RX removes the pad bytes as well as the CRC-32 field from receive frames before forwarding the frames to the client.

The MAC RX removes pad bytes from receive frames whose payload length is less than the following values for the different frame types:

- 46 bytes for basic frames
- 42 bytes for VLAN tagged frames
- 38 bytes for stacked VLAN tagged frames

To retain the CRC-32 field, set the `rx_padcrc_control` register to 0.

Figure 7–9 on page 7–16 shows the timing for the Avalon-ST transmit and receive interface where the MAC TX receives a frame with pad bytes and CRC-32 field inserted. The MAC RX removes the pad bytes and CRC-32 field from the receive frame when the `rx_padcrc_control`[1] bit is set to 1.

Figure 7–9. Avalon-ST Transmit and Receive Interface with Pad Bytes and CRC-32 Field Removed

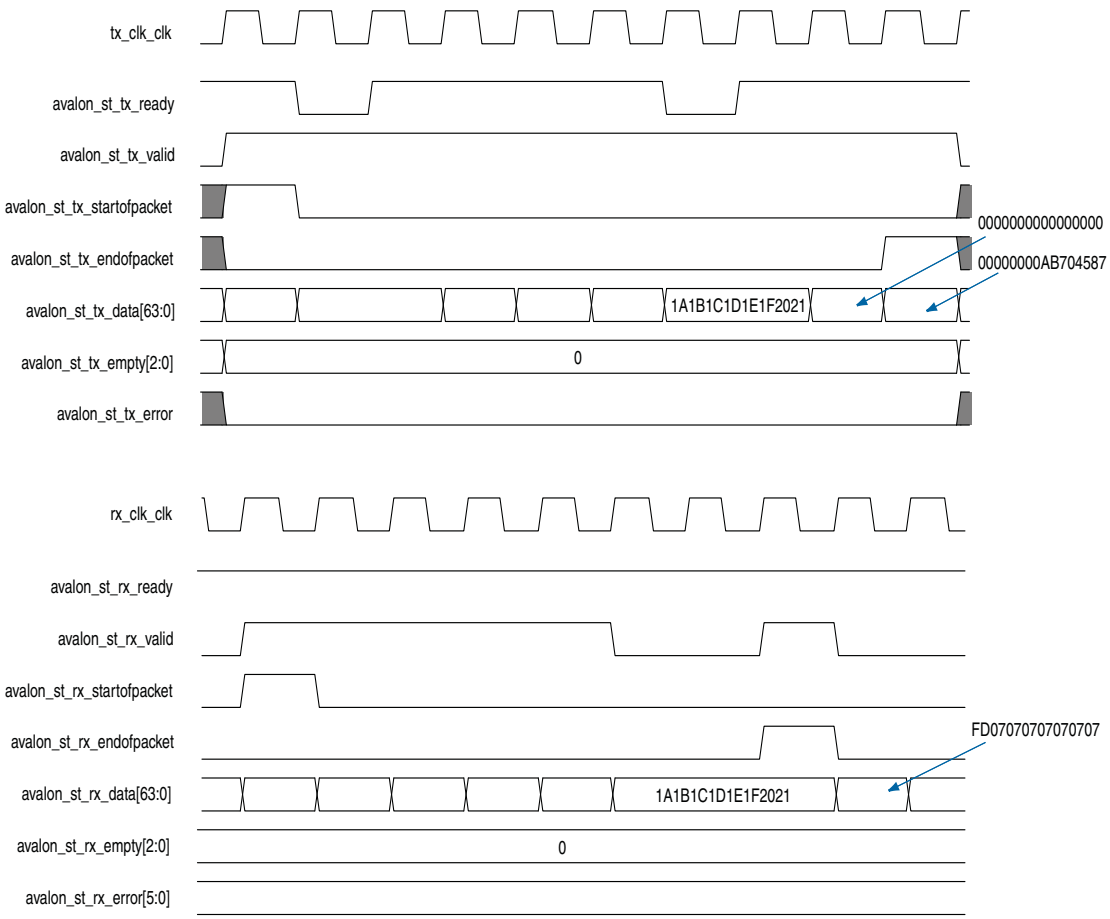

7.5.8. Overflow Handling

When an overflow occurs on the client side, the client can backpressure the Avalon-ST receive interface by deasserting the `avalon_st_rx_ready` signal. If an overflow occurs in the middle of frame transmission, the MAC RX truncates the frame by sending out the `avalon_st_rx_endofpacket` signal after the `avalon_st_rx_ready` signal is reasserted. The error bit, `avalon_st_rx_error[5]`, is set to 1 to indicate an overflow. If frame transmission is not in progress when an overflow occurs, the MAC RX drops the frame.

7.6. Transmit and Receive Latencies

Altera uses the following definitions for the transmit and receive latencies:

- Transmit latency is the number of clock cycles the MAC function takes to transmit the first byte on the network-side interface (XGMII SDR) after the bit was first available on the Avalon-ST interface.
- Receive latency is the number of clock cycles the MAC function takes to present the first byte on the Avalon-ST interface after the bit was received on the network-side interface (XGMII SDR).

Table 7–4 shows the transmit and receive nominal latencies of the MAC.

Table 7–4. Transmit and Receive Latencies of the MAC

MAC Configuration	Latency (Clock Cycles) *(1) (2)*	
	Transmit (with respect to TX clock)	Receive (with respect to RX clock)
MAC only	10	12
MAC with 10 Mbps mode	300	3,459
MAC with 100 Mbps mode	47	354
MAC with 1 Gbps mode	16	42

Notes to Table 7–4:

(1) The clocks in all domains are running at the same frequency.

(2) The latency values are based on the assumption that there is no backpressure on the Avalon-ST TX and RX interface.

7.7. Congestion and Flow Control

The flow control, as specified by IEEE 802.3 Annex 31B, is a mechanism to manage congestion at the local or remote partner. When the receiving device experiences congestion, it sends an XOFF pause frame to the emitting device to instruct the emitting device to stop sending data for a duration specified by the congested receiver. Data transmission resumes when the emitting device receives an XON pause frame (pause quanta = zero) or when the timer expires.

The PFC, as specified by IEEE 802.1Qbb, is a similar mechanism that manages congestion based on priority levels. The PFC supports up to 8 priority queues. When the receiving device experiences congestion on a priority queue, it sends a PFC frame requesting the emitting device to stop transmission on the priority queue for a duration specified by the congested receiver. When the receiving device is ready to receive transmission on the priority queue again, it sends a PFC frame instructing the emitting device to resume transmission on the priority queue.



Ensure that only one type of flow control is enabled at any one time.

7.7.1. IEEE 802.3 Flow Control

This section describes the pause frame reception and transmission in the IEEE 802.3 flow control. To use the IEEE 802.3 flow control, set the following registers:

1. On the transmit datapath:
   - Set `tx_pfc_priority_enable` to 0 to disable the PFC.
   - Set `tx_pauseframe_enable` to 1 to enable the IEEE 802.3 flow control.
2. On the receive datapath:
   - Set `rx_pfc_control` to 1 to disable the PFC.
   - Set the `IGNORE_PAUSE` bit in the `rx_decoder_control register` to 0 to enable the IEEE 802.3 flow control.

7.7.1.1. Pause Frame Reception

When the MAC receives an XOFF pause frame, it stops transmitting frames to the remote partner for a period equal to the pause quanta field of the pause frame. If the MAC receives a pause frame in the middle of a frame transmission, the MAC finishes sending the current frame and then suspends transmission for a period specified by the pause quanta. The MAC resumes transmission when it receives an XON pause frame or when the timer expires. The pause quanta received overrides any counter currently stored. When the remote partner sends more than one pause quanta, the MAC sets the value of the pause to the last quanta it received from the remote partner. You have the option to configure the MAC to ignore pause frames and continue transmitting frames by setting the `IGNORE_PAUSE` bit in the `rx_decoder_control` register to 1.

7.7.1.2. Pause Frame Transmission

The MAC provides the following two methods for the client or connecting device to trigger pause frame transmission:

- `avalon_st_pause_data` signal—You can connect this 2-bit signal to a FIFO buffer or a client. Setting `avalon_st_pause_data[1]` to 1 triggers the transmission of XOFF pause frames; setting `avalon_st_pause_data[0]` to 1 triggers the transmission of XON pause frames.

  If pause frame transmission is triggered when the MAC is generating a pause frame, the MAC ignores the incoming request and completes the generation of the pause frame. Upon completion, if the `avalon_st_pause_data` signal remains asserted, the MAC generates a new pause frame and continues to do so until the signal is deasserted.

  ☞ Assert the `avalon_st_pause_data` signal for at least 1 Tx clock cycle (`tx_tx_clk`) for the MAC to generate the pause frame right after the current transmitting packet.

- `tx_pauseframe_control` register—A host (software) can set this register to trigger pause frames transmission. Setting `tx_pauseframe_control[1]` to 1 triggers the transmission of XOFF pause frames; setting `tx_pauseframe_control[0]` to 1 triggers the transmission of XON pause frames. The register clears itself after the request is executed.

  You can configure the pause quanta in the `tx_pauseframe_quanta` register. The MAC sets the pause quanta field in XOFF pause frames to this register value.

☞ The `tx_pauseframe_control` register takes precedence over the `avalon_st_pause_data` signal.

Figure 7–10 shows the transmission of an XON pause frame. The MAC sets the destination address field to the global multicast address, 01-80-C2-00-00-01 (0x010000c28001) and the source address to the MAC primary address configured in the `tx_addrins_macaddr0` and `tx_addrins_madaddr1` registers.

Figure 7–10. XON Pause Frame Transmission

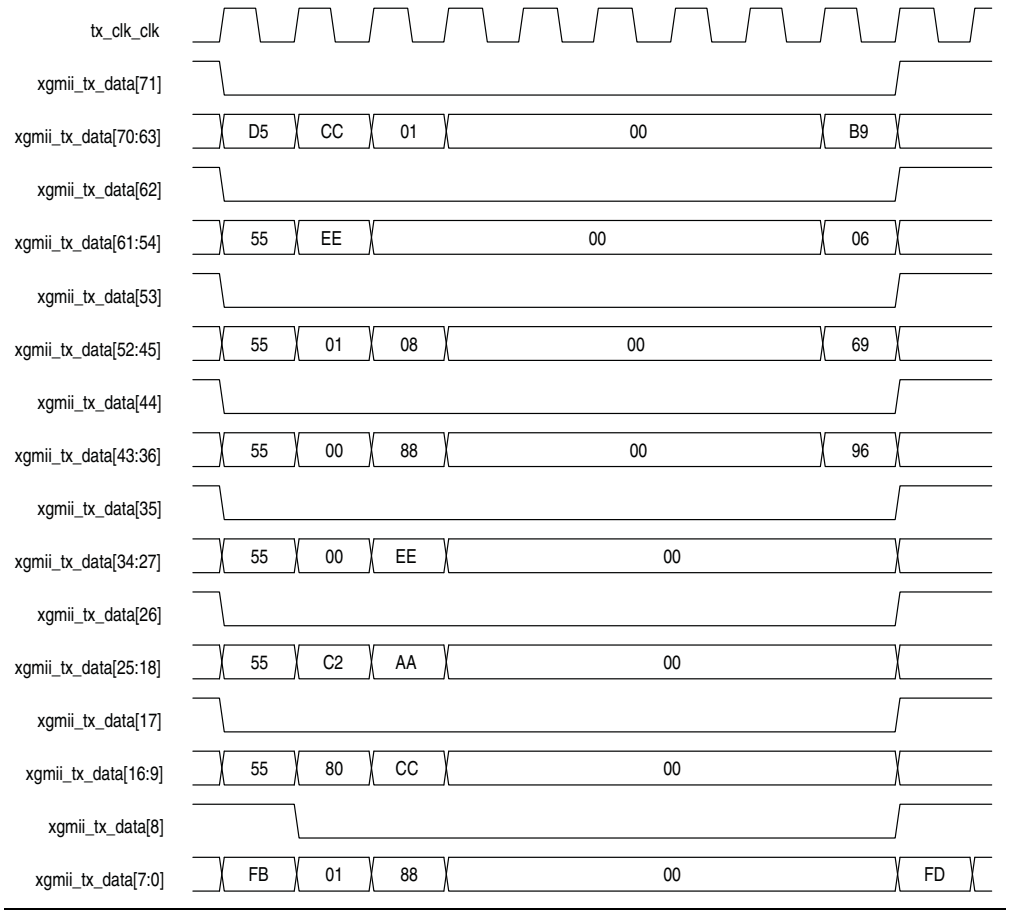

7.7.2. Priority-Based Flow Control

This section describes the PFC frame reception and transmission. Follow these steps to use the PFC:

1. Turn on the **Priority-based flow control (PFC)** parameter and specify the number of priority levels using the **Number of PFC priorities** parameter. You can specify between 2 to 8 PFC priority levels.
2. Set the following registers.
   - On the transmit datapath:
     - Set `tx_pauseframe_enable` to 0 to disable the IEEE 802.3 flow control.
     - Set `tx_pfc_priority_enable[n]` to 1 to enable the PFC for priority queue *n*.
   - On the receive datapath:
     - Set the `IGNORE_PAUSE` bit in the `rx_decoder_control register` to 1 to disable the IEEE 802.3 flow control.
     - Set the `PFC_IGNORE_PAUSE_n` bit in the `rx_pfc_control` register to 0 to enable the PFC.
3. Connect the `avalon_st_tx_pfc_gen_data` signal to the corresponding RX client logic and the `avalon_st_rx_pfc_pause_data` signal to the corresponding TX client logic.
4. You have the option to configure the MAC RX to forward the PFC frame to the client by setting the `FWD_PFC` bit in the `rx_pfc_control` register to 1. By default, the MAC RX drops the PFC frame after processing it.

7.7.2.1. PFC Frame Reception

When the MAC RX receives a PFC frame from the remote partner, it asserts the `avalon_st_rx_pfc_pause_data[n]` signal if Pause Quanta *n* is valid (Pause Quanta Enable [*n*] = 1) and greater than 0. The client suspends transmission from the TX priority queue *n* for the period specified by Pause Quanta *n*. If the MAC RX asserts the `avalon_st_rx_pfc_pause_data[n]` signal in the middle of a client frame transmission for the TX priority queue *n*, the client finishes sending the current frame and then suspends transmission for the queue.

When the MAC RX receives a PFC frame from the remote partner, it deasserts the `avalon_st_rx_pfc_pause_data[n]` signal if Pause Quanta *n* is valid (Pause Quanta Enable [*n*] = 1) and equal to 0. The MAC RX also deasserts this signal when the timer expires. The client resumes transmission for the suspended TX priority queue when the `avalon_st_rx_pfc_pause_data[n]` signal is deasserted.

When the remote partner sends more than one pause quanta for the TX priority queue *n*, the MAC RX sets the pause quanta *n* to the last pause quanta received from the remote partner.



For more information on the PFC pause frame, refer to Appendix A.4, Priority-Based Flow Control Frame.

7.7.2.2. PFC Frame Transmission

PFC frame generation is triggered through the `avalon_st_tx_pfc_gen_data` signal. Set the respective bits to generate XOFF or XON requests for the priority queues. Refer to Table 9–10 on page 9–18 for more information about the signal.

For XOFF requests, you can configure the pause quanta for each priority queue using the `pfc_pause_quanta_n` registers. For an XOFF request for priority queue *n*, the MAC TX sets bit *n* in the Pause Quanta Enable field to 1 and the Pause Quanta *n* field to the value of the `pfc_pause_quanta_n` register. You can also configure the gap between successive XOFF requests for a priority queue using the `pfc_holdoff_quanta_n` register. Refer to Table 8–2 on page 8–2 for more information about these registers.

For XON requests, the MAC TX sets the pause quanta to 0.

7.8. Error Handling (Link Fault)

The 10GbE MAC includes a reconciliation sublayer (RS) located between the MAC and the XGMII that handles local and remote faults.

When the local PHY reports a local fault—0x9c000001 (32-bit) or 0x9c01008000 (32-bit data and 4-bit control), the RS RX sets `link_fault_status_xgmii_rx_data` to 01. The RS TX starts sending the remote fault signal—0x9c000002 (32-bit data) or 0x9c01000001 (32-bit data and 4-bit control)—to the PHY, which the remote partner eventually receives.

When the local PHY receives a remote fault signal, the RS RX sets `link_fault_status_xgmii_rx_data` to 10. The RS TX transmits IDLE signal (07070707). When the RS TX starts sending the remote fault or IDLE signal, all data sent by the MAC TX is lost.

If the client and the remote partner both receive valid data in more than 127 columns, the RS RX sets `link_fault_status_xgmii_rx_data` to 00.

Figure 7–11 shows fault signaling.

Figure 7–11. Fault Signaling

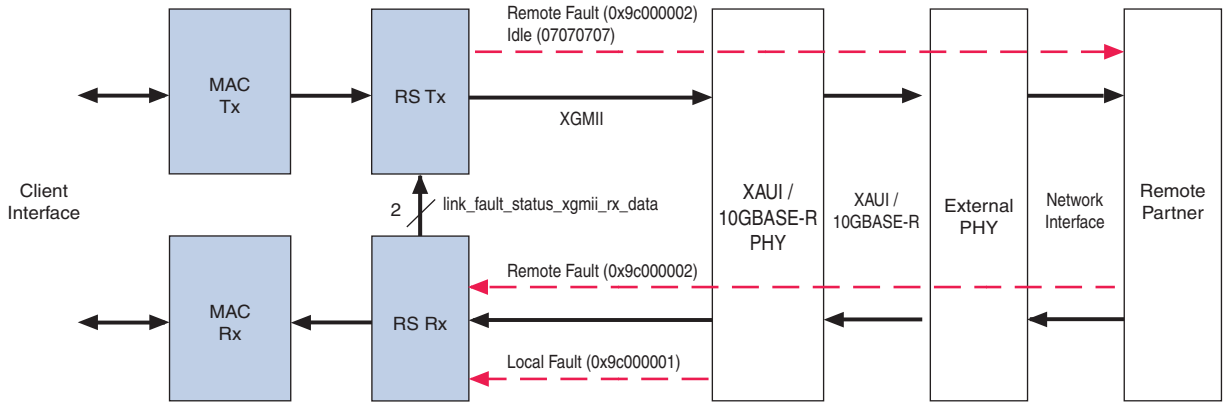

Figure 7–12 shows the timing for the XGMII TX interface transmitting the remote fault signal (0x9c000002).

Figure 7–12. XGMII TX interface Transmitting Remote Fault Signal

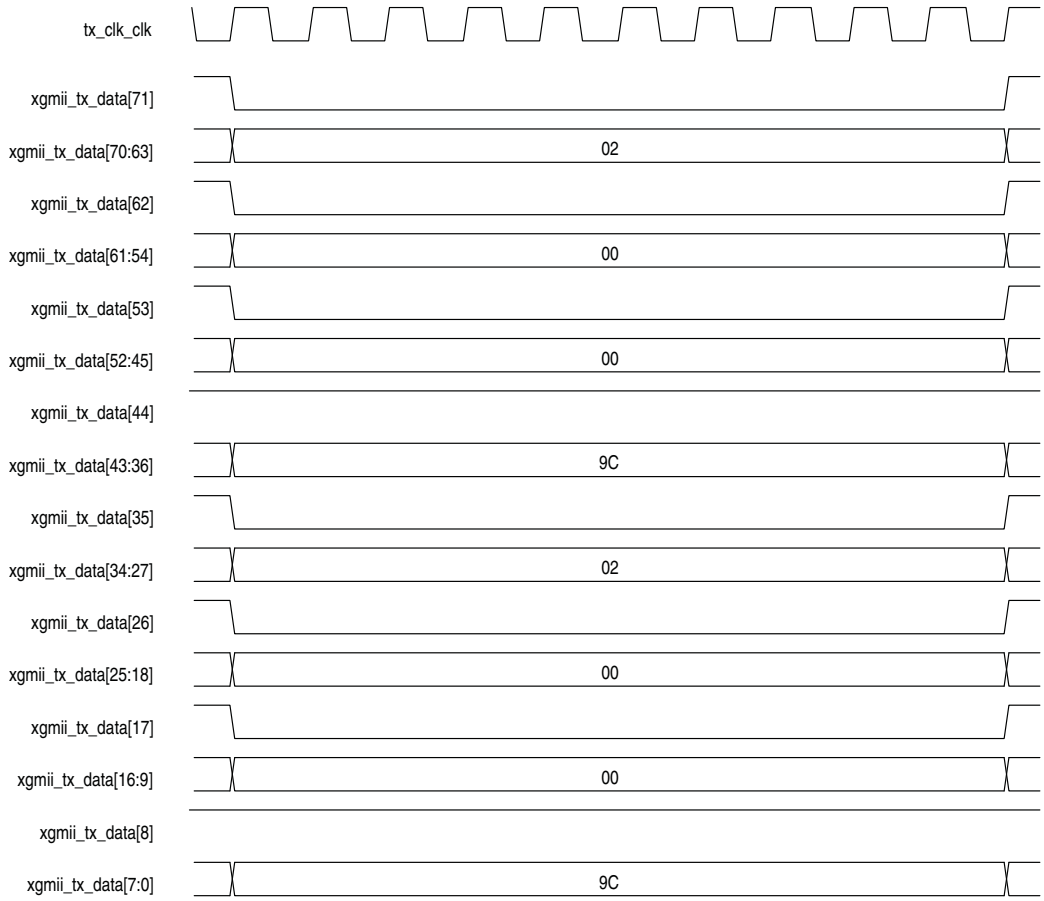

When you instantiate the MAC RX only variation, connect the `link_fault_status_xgmii_rx_data` signal to the corresponding RX client logic to handle the link fault. Similarly, when you instantiate the MAC TX only variation, connect the `link_fault_status_xgmii_tx_data` signal to the corresponding TX client logic. For more information on the signals, refer to "SDR XGMII Signals" on page 9–8.



The 1G/10GbE MAC does not support error handling through link fault. Instead, the MAC uses the `gmii_rx_err` signal.

7.9. IEEE 1588v2

The IEEE 1588v2 option provides time stamp for receive and transmit frames in the 10GbE MAC IP core designs. The feature consists of Precision Time Protocol (PTP). PTP is a layer-3 protocol that accurately synchronizes all real time-of-day clocks in a network to a master clock.

The IEEE 1588v2 option has the following features:

- Supports 4 types of PTP clock on the transmit datapath:
  - Master and slave ordinary clock
  - Master and slave boundary clock
  - End-to-end (E2E) transparent clock
  - Peer-to-peer (P2P) transparent clock
- Supports PTP with the following message types:
  - PTP event messages—Sync, Delay_Req, Pdelay_Req, and Pdelay_Resp.
  - PTP general messages—Follow_Up, Delay_Resp, Pdelay_Resp_Follow_Up, Announce, Management, and Signaling.
- Supports simultaneous 1-step and 2-step clock synchronizations on the transmit datapath.
  - 1-step clock synchronization—The MAC function inserts accurate timestamp in Sync PTP message or updates the correction field with residence time.
  - 2-step clock synchronization—The MAC function provides accurate timestamp and the related fingerprint for all PTP message.
- Supports the following PHY operating speed random error:
  - 10 Gbps—Timestamp accuracy of ± 3 ns
  - 1 Gbps—Timestamp accuracy of ± 2 ns
  - 100 Mbps—Timestamp accuracy of ± 5 ns
- Supports static error of ± 3 ns across all speeds.
- Supports IEEE 802.3, UDP/IPv4, and UDP/IPv6 protocol encapsulations for the PTP packets.
- Supports untagged, VLAN tagged, and Stacked VLAN Tagged PTP packets, and any number of MPLS labels.
- Supports configurable register for timestamp correction on both transmit and receive datapaths.
- Supports ToD clock that provides a stream of 96-bit timestamps. For more information about the ToD clock, refer to Appendix B, Time-of-Day (ToD) Clock.

7.9.1. Architecture

Figure 7–13 shows the overview of the IEEE 1588v2 feature.

Figure 7–13. Overview of IEEE 1588v2 Feature *(Note 1)*

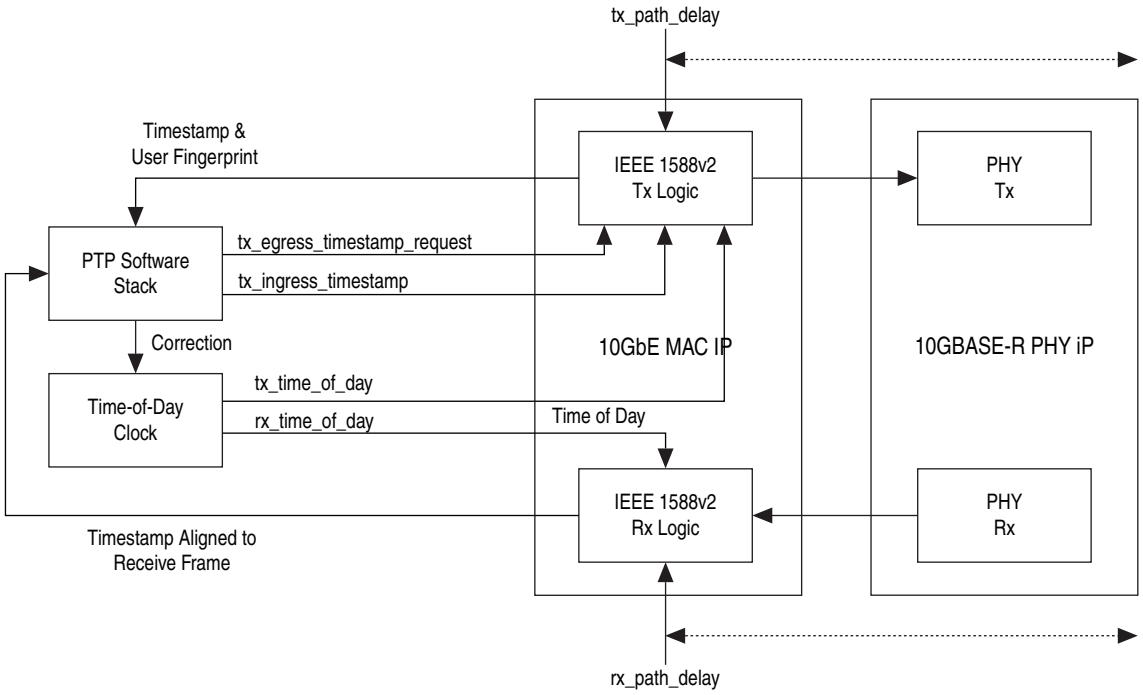

Note to Figure 7–13:

(1) This figure shows only the datapaths related to the IEEE 1588v2 feature.

7.9.2. Transmit Datapath

The IEEE 1588v2 feature supports 1-step and 2-step clock synchronizations on the transmit datapath.

- For 1-step clock synchronization,
  - Timestamp insertion depends on the PTP device and message type.
  - The MAC function inserts a timestamp in the PTP packet when the client specifies the Timestamp field offset and asserts Timestamp Insert Request.
  - Depending on the PTP device and message type, the MAC function updates the residence time in the correction field of the PTP packet when the client asserts `tx_etstamp_ins_ctrl_residence_time_update` and Correction Field Update.The residence time is the difference between the egress and ingress timestamps.
  - For PTP packets encapsulated using the UDP/IPv6 protocol, the MAC function performs UDP checksum correction using extended bytes in the PTP packet.
  - The MAC function re-computes and re-inserts CRC-32 into the PTP packets after each timestamp or correction field insertion.
  - The format of timestamp supported includes 1588v1 and 1588v2, (as specified in Y.1731)
- For 2-step clock synchronization, the MAC function returns the timestamp and the associated fingerprint for all transmit frames when the client asserts `tx_egress_timestamp_request_valid`.

Table 7–5 summarizes the timestamp and correction field insertions for various PTP messages in different PTP clocks.

Table 7–5. Timestamp and Correction Insertion for 1-Step Clock Synchronization

PTP Message	Ordinary Clock		Boundary Clock		E2E Transparent Clock		P2P Transparent Clock	
	Insert Timestamp	Insert Correction	Insert Timestamp	Insert Correction	Insert Timestamp	Insert Correction	Insert Timestamp	Insert Correction
Sync	Yes *(1)*	No	Yes *(1)*	No	No	Yes *(2)*	No	Yes *(2)*
Delay_Req	No	No	No	No	No	Yes *(2)*	No	Yes *(2)*
Pdelay_Req	No	No	No	No	No	Yes *(2)*	No	No
Pdelay_Resp	No	Yes *(1)*, *(2)*	No	Yes *(1)*, *(2)*	No	Yes *(2)*	No	Yes *(1)*, *(2)*
Delay_Resp	No	No	No	No	No	No	No	No
Follow_Up	No	No	No	No	No	No	No	No
Pdelay_Resp_ Follow_Up	No	No	No	No	No	No	No	No
Announce	No	No	No	No	No	No	No	No
Signaling	No	No	No	No	No	No	No	No
Management	No	No	No	No	No	No	No	No

Notes to Table 7–5:

(1) Applicable only when 2-step flag in `flagField` of the PTP packet is 0.

(2) Applicable when you assert tx_etstamp_ins_ctrl_residence_time_update.

7.9.3. Receive Datapath

In the receive datapath, the IEEE 1588v2 feature provides a timestamp for all receive frames. The timestamp is aligned with the `avalon_st_rx_startofpacket` signal.

7.9.4. Frame Format

The MAC function, with the IEEE 1588v2 feature, supports PTP packet transfer for the following transport protocols:

- IEEE 802.3
- UDP/IPv4
- UDP/IPv6

7.9.4.1. PTP Packet in IEEE 802.3

Figure 7–14 shows the format of the PTP packet encapsulated in IEEE 802.3.

Figure 7–14. PTP Packet in IEEE 8002.3

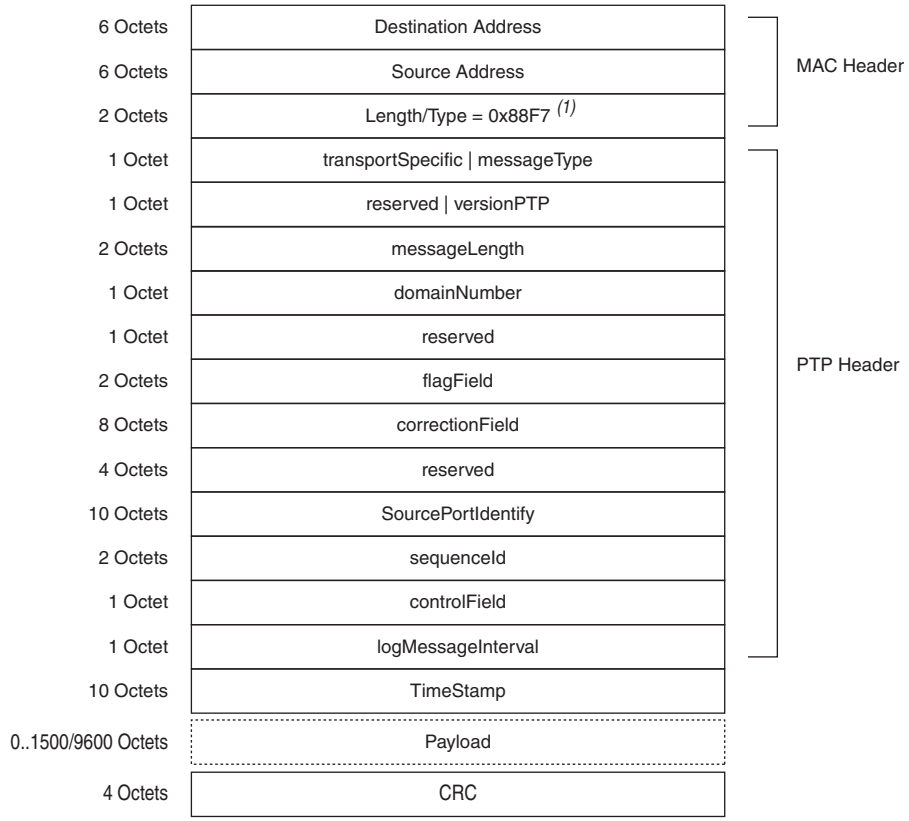

Note to Figure 7–14:

(1) For packets with VLAN or Stacked VLAN tag, add 4 or 8 octets offsets before the length/type field.

7.9.4.2. PTP Packet over UDP/IPv4

Figure 7–15 shows the format of the PTP packet encapsulated in UDP/IPv4. Checksum calculation is optional for the UDP/IPv4 protocol. The 1588v2 TX logic should set the checksum to zero.

Figure 7–15. PTP Packet over UDP/IPv4

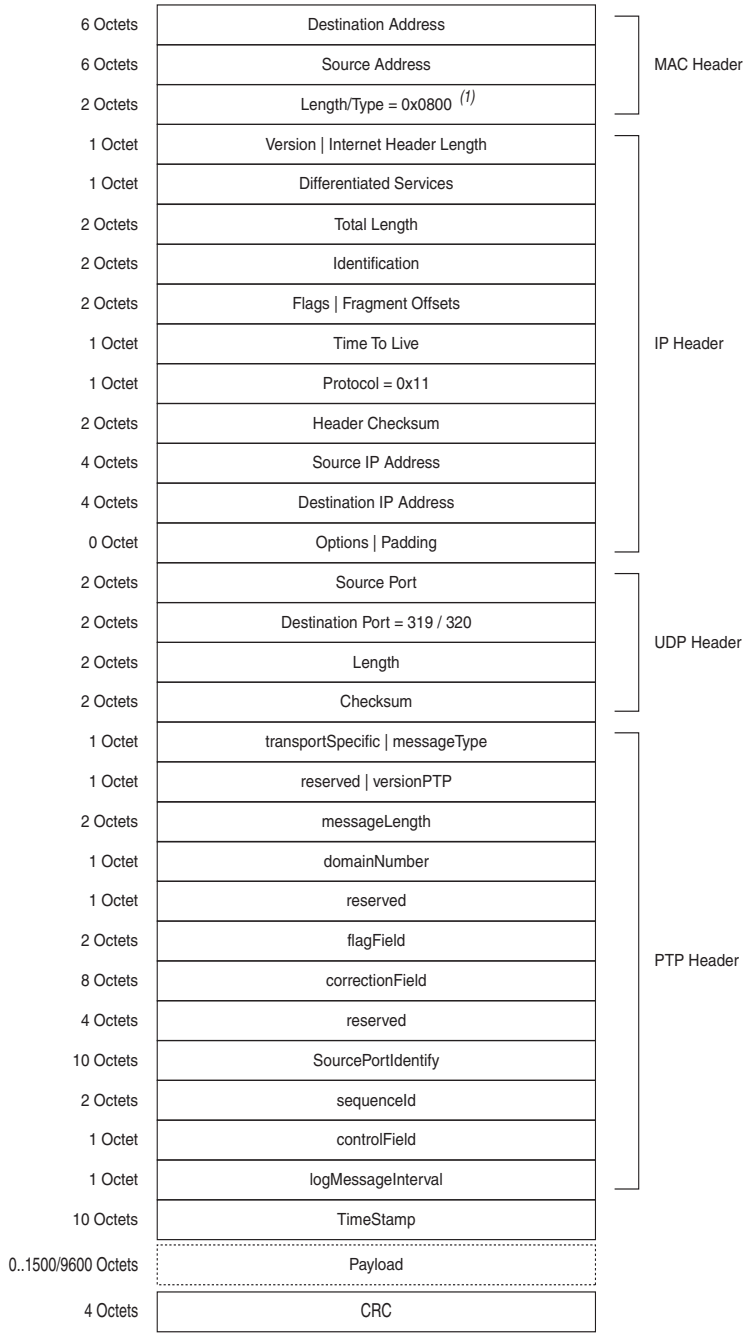

Note to Figure 7–15:

(1) For packets with VLAN or Stacked VLAN tag, add 4 or 8 octets offsets before the length/type field.

7.9.4.3. PTP Packet over UDP/IPv6

Figure 7–16 shows the format of the PTP packet transported over the UDP/IPv6 protocol. Checksum calculation is mandatory for the UDP/IPv6 protocol. You must extend 2 bytes at the end of the UDP payload of the PTP packet. The MAC function modifies the extended bytes to ensure that the UDP checksum remains uncompromised.

Figure 7–16. PTP Packet over UDP/IPv6

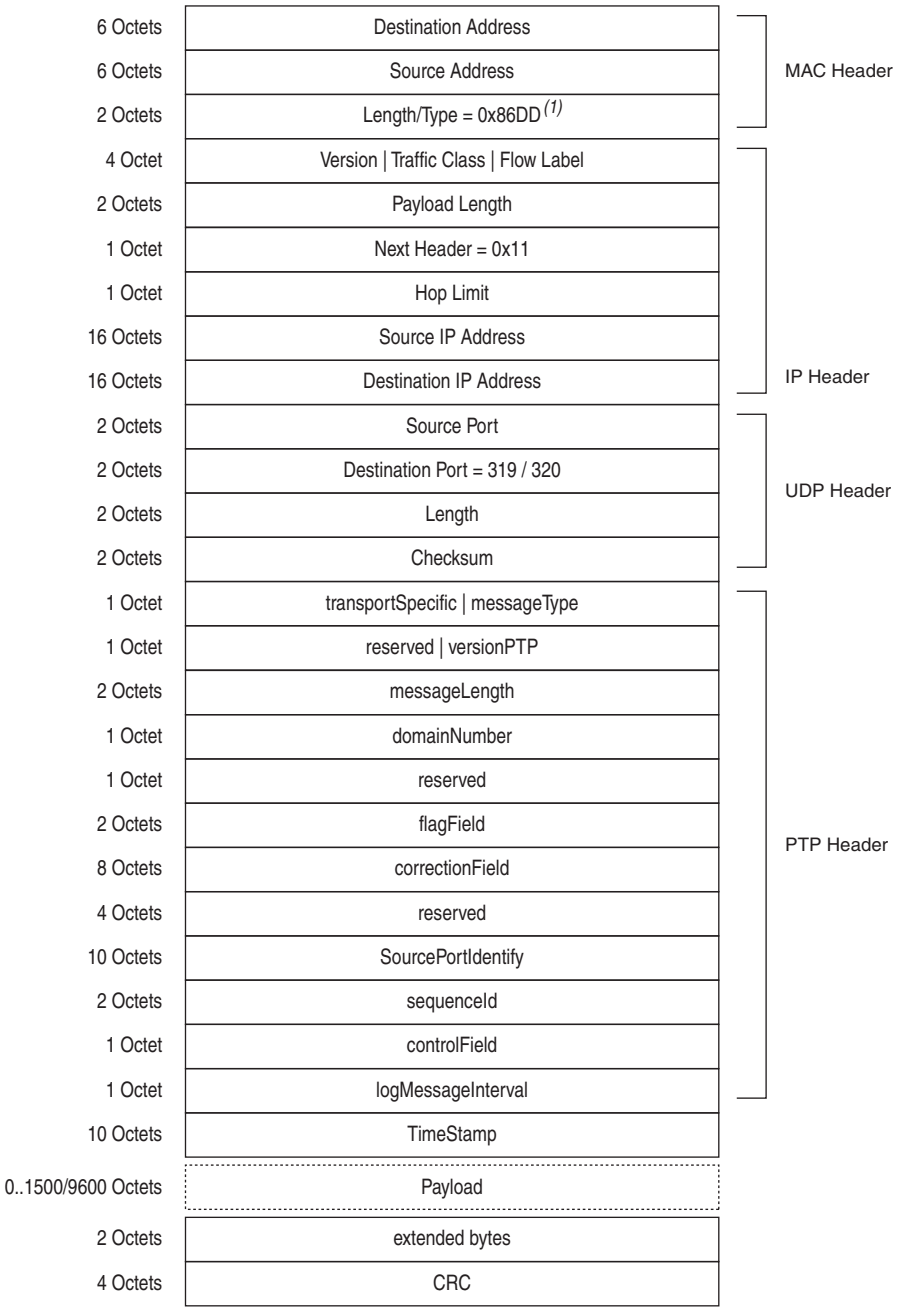

Note to Figure 7–16:

(1) For packets with VLAN or Stacked VLAN tag, add 4 or 8 octets offsets before the length/type field.

8. Registers

This section defines the MAC registers. The statistics collected on the transmit and receive datapaths are categorized as good, error, or invalid frames.

- Good frame—Error-free frames with a valid frame length.
- Error frame—Frames that contain errors or with an invalid frame length.
- Invalid frame—Frames that are not addressed to the MAC. It may or may not contain error within the frame or have an invalid frame length. The MAC drops invalid frames.

When you select the MAC Rx only variation, the register offsets from 0x000 to 0x3FFF are available for Rx status and configuration registers. Similarly, when you select the MAC TX only variation, the register offsets from 0x4000 to 0x7FFF are available for TX status and configuration registers. All status and configuration registers are as defined in Table 8–2 on page 8–2.

CAUTION

Altera recommends accessing only the available register spaces in the MAC Rx only variation or the MAC TX only variation. Accessing unavailable register spaces may cause the MAC to lock the Avalon-MM bus.

Altera has updated all register address for the 10GbE MAC IP core as part of register map expansion to accommodate new registers. Table 8–1 summarizes the changes.

Table 8–1. Summary of Register Address Expansion

Component Name	Previous Address Range (ACDS Version 10.0, 10.1)	New Address Range (ACDS Version 11.0 Onwards)
RX Datapath		
RX Packet Transfer	0x000:0x00F	0x000:0x0FF
RX Pad/CRC Remover	0x010:0x01F	0x100:0x1FF
RX CRC Checker	0x020:0x0FF	0x200:0x2FF
RX Packet Overflow	0x180:0x1FF	0x300:0x3FF
RX Preamble Control	—	0x400:0x4FF
RX Lane Decoder	—	0x500:0x1FFF
RX Frame Decoder	0x100:0x17F	0x2000:0x2FFF
RX Statistics Counters	0x200:0x3FF	0x3000:0x3FFF
TX Datapath		
TX Packet Transfer	0x400:0x40F	0x4000:0x40FF
TX Pad Inserter	0x410:0x41F	0x4100:0x41FF
TX CRC Inserter	0x420:0x45F	0x4200:0x42FF
TX Packet Underflow	0x580:0x5FF	0x4300:0x43FF
TX Preamble Control	—	0x4400:0x447F
TX Unidirectional	—	0x4480:0x44FF

Table 8–1. Summary of Register Address Expansion

Component Name	Previous Address Range (ACDS Version 10.0, 10.1)	New Address Range (ACDS Version 11.0 Onwards)
TX Pause Frame Control and Generator	0x460:0x47F	0x4500:0x45FF
TX PFC Generator	—	0x4600:0x47FF
TX Address Inserter	0x480:0x4FF	0x4800:0x5FFF
TX Frame Decoder	0x500:0x57F	0x6000:0x6FFF
TX Statistics Counters	0x600:0x7FF	0x7000:0x7FFF

If you instantiate the IP core using the MegaWizard Plug-in Manager flow, use double word (dword) addressing to access the register spaces. Convert the byte offsets to dword offsets by dividing the byte offsets by 4. For example,

- `rx_padcrc_control` byte offset = 0x100
- `rx_padcrc_control` word offset = 0x100 ÷ 4 = 0x040

Do not reconfigure the MAC through the CSR registers when the datapath is not idle, with the exception of the following registers:

- `tx_transfer_control`
- `rx_transfer_control`
- `tx_pauseframe_control`
- `tx_stats_clr`
- `rx_stats_clr`
- `rx_pfc_control`
- All IEEE 1588v2 CSR registers

8.1. MAC Registers

Table 8–2 shows the MAC registers.

Table 8–2. MAC Registers (Part 1 of 15)

Word Offset	Register Name	Access	Reset Value	Description
RX Packet Transfer (0x000:0x03F)				
0x000	`rx_transfer_control`	RW	0x0	Receive path enable. ■ Bit 0 configures the receive path. 0—Enables the receive path. 1—Disables the receive path and drops all receive frames. ■ Bits 1 to 31 are reserved.

Table 8–2. MAC Registers (Part 2 of 15)

Word Offset	Register Name	Access	Reset Value	Description
0x001	rx_transfer_status	RO	0x0	■ Bit 0 indicates the status of the receive path. 0—The receive path is enabled. 1—The receive path is disabled. ■ Bits 1 to 31 are reserved.
0x002 – 0x03F	Reserved	—	—	Reserved for future use.
RX Pad/CRC Remover (0x040:0x07F)				
0x040	rx_padcrc_control	RW	0x1	Padding and CRC removal (through the avalon_st_rx_data signal). ■ Bit 0 configures CRC removal. 0—Retains the CRC field in receive packets. 1—Removes the CRC field from receive packets. ■ Bit 1 configures padding and CRC removal. 0—Retains the padding bytes and CRC field. 1—Removes the padding bytes and CRC field from receive packets. The setting of this bit takes precedence over bit 0. ■ Bits 2 to 31 are reserved.
0x041 – 0x07F	Reserved	—	—	Reserved for future use.
RX CRC Checker (0x080:0x0BF)				
0x080	rx_crccheck_control	RW	0x2	CRC checking: ■ Bit 0—Always set this bit to 0. ■ Bit 1 configures CRC checking. 0—Ignores the CRC field. 1—Checks the CRC field. ■ Bits 2 to 31 are reserved.
0x081 – 0x0BF	Reserved	—	—	Reserved for future use.
RX Packet Overflow (0x0C0:0x0FF)				
0x0C0	rx_pktovrflow_error	RO	0x0	36-bit error counter that collects the number of receive frames that are truncated when FIFO buffer overflow persists: ■ The first 32 bits occupy the register at offset 0x0C0. ■ The last 4 bits occupy the first four bits of the register at offset 0x0C1. Bits 4 to 31 are unused. The counter will be cleared when the last 4 bits have been read. If only the first 32 bits are read, the counter will not be cleared.
0x0C1			0x0	

Table 8–2. MAC Registers (Part 3 of 15)

Word Offset	Register Name	Access	Reset Value	Description
0x0C2	rx_pktovrflow_etherStatsDropEvents	RO	0x0	36-bit error counter that collects the number of receive frames that are dropped when FIFO buffer overflow persists: ■ The first 32 bits occupy the register at offset 0x0C2. ■ The last 4 bits occupy the first four bits of the register at offset 0x0C3. Bits 4 to 31 are unused. The counter will be cleared when the last 4 bits have been read. If only the first 32 bits are read, the counter will not be cleared.
0x0C3			0x0	
0x0C4 – 0x0FF	Reserved	—	—	Reserved for future use.
RX Preamble Control (0x100:0x13F)				
0x100	rx_lane_decoder_preamble_control	RW	0x0	■ Bit 0 determines whether or not the client-defined preamble is forwarded to the client frame. 0—Removes the client-defined preamble from the receive frame. 1—Forwards the client-defined preamble to the client. ■ Bits 1 to 31 are reserved.
0x101 – 0x13F	Reserved	—	—	Reserved for future use.
RX Lane Decoder (0x140:0x7FF)				
0x140	rx_preamble_inserter_control	RW	0x0	■ Bit 0 enables the preamble passthrough mode on the receive datapath. 0—Disables the preamble passthrough mode. 1—Enables the preamble passthrough mode. ■ Bits 1 to 31 are reserved. For more information on the XGMII decapsulation in the preamble passthrough mode, refer to "XGMII Decapsulation" on page 7–12.
0x141 – 0x7FF	Reserved	—	—	Reserved for future use.
RX Frame Decoder (0x800:0xBFF)				
0x800	rx_frame_control	RW	0x3	Specifies valid frame types, pause frames handling, and use of supplementary addresses. Refer to "Rx_frame_control Register" on page 8–16 for the bit description.

Table 8–2. MAC Registers (Part 4 of 15)

Word Offset	Register Name	Access	Reset Value	Description
0x801	rx_frame_maxlength	RW	1518	■ Bits 0 to 15 specify the maximum allowable frame length. The MAC asserts the avalon_st_rx_error[3] signal when the length of the receive frame exceeds the value of this register. ■ Bits 16 to 31 are reserved.
0x802	rx_frame_addr0	RW	0x0	6-byte primary MAC address. You must map the address to the registers in the following manner: ■ rx_frame_addr0 = Last four bytes of the address ■ rx_frame_addr1[0:15]= First two bytes of the address. Bits 16 to 31 are reserved. Example: If the primary MAC address is 00-1C-23-17-4A-CB, set rx_frame_addr0 to 0x23174ACB and rx_frame_addr1 to 0x0000001C. The IP core uses the primary MAC address to filter unicast frames when the en_allucast bit of the rx_frame_control register is set to 0.
0x803	rx_frame_addr1 *(1)*	RW	0x0	
0x804	rx_frame_spaddr0_0	RW	0x0	You can specify up to four 6-byte supplementary addresses: ■ rx_framedecoder_spaddr0_0/1 ■ rx_framedecoder_spaddr1_0/1 ■ rx_framedecoder_spaddr2_0/1 ■ rx_framedecoder_spaddr3_0/1 You must map the supplementary addresses to the respective registers in the same manner as the primary MAC address. Refer to the description of rx_frame_addr0 and rx_frame_addr1. The IP core uses the supplementary addresses to filter unicast frames when the following conditions are set: ■ The use of the supplementary addresses are enabled using the respective bits in the rx_frame_control register (refer to "Rx_frame_control Register" on page 8–16). ■ The en_allucast bit of the rx_frame_control register is set to 0.
0x805	rx_frame_spaddr0_1 *(1)*	RW	0x0	
0x806	rx_frame_spaddr1_0	RW	0x0	
0x807	rx_frame_spaddr1_1 *(1)*	RW	0x0	
0x808	rx_frame_spaddr2_0	RW	0x0	
0x809	rx_frame_spaddr2_1 *(1)*	RW	0x0	
0x80A	rx_frame_spaddr3_0	RW	0x0	
0x80B	rx_frame_spaddr3_1 *(1)*	RW	0x0	

Table 8–2. MAC Registers (Part 5 of 15)

Word Offset	Register Name	Access	Reset Value	Description
0x818	rx_pfc_control	RW	0x1	PFC enable for the priority queues on the receive datapath. Refer to "Rx_pfc_control Register" on page 8–17 for the bit description.
0x819 – 0xBFF	Reserved	—	—	Reserved for future use.
TX Packet Transfer (0x1000:0x103F)				
0x1000	tx_transfer_control	RW	0x0	Backpressure enable. ■ Bit 0 configures transmit transfer control. 0—Enables transmit transfer datapath. 1—Disables transmit transfer datapath on the Avalon-ST transmit interface. The IP core deasserts the avalon_st_tx_ready signal. ■ Bits 1 to 31 are reserved.
0x1001	tx_transfer_status	RO	0x0	■ Bit 0 indicates if transmit transfer datapath is enabled on the Avalon-ST transmit interface. 0—Transmit transfer datapath is enabled. 1—Transmit transfer datapath is disabled. ■ Bits 1 to 31 are reserved.
0x1002 – 0x103F	Reserved	—	—	Reserved for future use.
TX Pad Inserter (0x1040:0x107F)				
0x1040	tx_padins_control	RW	0x1	■ Bit 0 indicates padding bytes insertion. 0—No effect on transmit frames.The client must ensure that the length of the data frame meets the minimum length as required by the IEEE 802.3 specifications. 1—Inserts padding bytes into transmit frames until the frame length reaches 60 bytes. To achieve the minimum 64 bytes, ensure that the CRC field is inserted (refer to tx_crcins_control). ■ Bits 1 to 31 are reserved. ■ You must enable CRC insertion when you enable padding bytes insertion.
0x1041 – 0x107F	Reserved	—	—	Reserved for future use.
TX CRC Inserter (0x1080:0x10BF)				

Table 8–2. MAC Registers (Part 6 of 15)

Word Offset	Register Name	Access	Reset Value	Description
0x1080	tx_crcins_control	RW	0x3	CRC insertion. ■ Bit 0—Always set this bit to 1. ■ Bit 1 configures CRC insertion. 0—Disables CRC insertion. 1—Computes CRC and inserts it into transmit frames. ■ Bits 2 to 31 are reserved.
0x1081 – 0x10BF	Reserved	—	—	Reserved for future use.
TX Packet Underflow (0x10C0:0x10FF)				
0x10C0 0x10C1	tx_pktunderflow_error	RO	0x0	36-bit error counter that collects the number of transmit frames that are truncated when FIFO buffer underflow persists. ■ The first 32 bits occupy the register at offset 0x10C0. ■ The last 4 bits occupy the first four bits of the register at offset 0x10C1. Bits 4 to 31 are reserved. The counter will be cleared when the last 4 bits have been read. If only the first 32 bits are read, the counter will not be cleared.
0x10C2 – 0x10FF	Reserved	—	—	Reserved for future use.
TX Preamble Control (0x1100:0x111F)				
0x1100	tx_preamble_control	RW	0x0	■ Bit 0 configures the preamble passthrough mode in the transmit datapath. 0—Set to 1 to disable the preamble passthrough mode. 1—Set to 1 to enable the preamble passthrough mode. MAC Tx identifies the first 8-bytes of the client frame as client-defined preamble. ■ Bits 1 to 31 are reserved.
0x1101 – 0x111F	Reserved	—	—	Reserved for future use.
TX Unidirectional (0x1120:0x113F)				

Table 8–2. MAC Registers (Part 7 of 15)

Word Offset	Register Name	Access	Reset Value	Description
0x1120	tx_unidir_control	RW	0x0	■ Bit 0 configures the unidirectional mode in the transmit datapath. 0—Disable unidirectional mode. 1—Enables unidirectional mode. ■ Bit 1 configures remote fault sequence generation when unidirectional mode is enabled in the transmit datapath. 0—Enable remote fault sequence generation on detecting local fault. 1—Disable remote fault sequence generation. ■ Bits 2 to 31 are reserved.
0x1121 – 0x113F	Reserved	—	—	Reserved for future use.
TX Pause Frame Control and Generator (0x1140:0x117F)				
0x1140	tx_pauseframe_control	RW	0x0	IEEE 802.3 pause frame generation. ■ Bit 0 configures the generation of XON pause frames. 0—Disables pause frame generation. 1—Generates a pause frame with a pause quanta value of 0. ■ Bit 1 configures the generation of XOFF pause frames. 0—Disables pause frame generation. 1—Generates a pause frame using the pause quanta specified in the tx_pauseframe_quanta register. ■ Bits 2 to 31 are reserved. If both bits 0 and 1 are set to 1 simultaneously, the IP core does not generate any pause frames. This register is cleared after each operation.
0x1141	tx_pauseframe_quanta	RW	0x0	16-bit pause quanta. The IP core uses this value when it generates XOFF pause frames. Bits 16 to 31 are reserved.
0x1142	tx_pauseframe_enable	RW	0x1	IEEE 802.3 pause frame generation process. ■ Bit 0 configures the process to generate the IEEE 802.3 pause frame. 0—Disables pause frame generation process. 1—Enables pause frame generation process. ■ Bits 1 to 31 are reserved.
0x1143 – 0x117F	Reserved	—	—	Reserved for future use.
TX PFC Generator (0x1180:0x11FF)				

Table 8–2. MAC Registers (Part 8 of 15)

Word Offset	Register Name	Access	Reset Value	Description
0x1180	pfc_pause_quanta_0	RW	0x0	pfc_pause_quanta_*n* specifies the pause length for priority queue *n*. The pause length is in unit of pause quanta, where 1 pause quanta = 512 bits time. Bits 16 to 31 are reserved.
0x1181	pfc_pause_quanta_1	RW	0x0	
0x1182	pfc_pause_quanta_2	RW	0x0	
0x1183	pfc_pause_quanta_3	RW	0x0	
0x1184	pfc_pause_quanta_4	RW	0x0	
0x1185	pfc_pause_quanta_5	RW	0x0	
0x1186	pfc_pause_quanta_6	RW	0x0	
0x1187	pfc_pause_quanta_7	RW	0x0	
0x1188 – 0x118F	Reserved	—	—	Reserved for future use.
0x1190	pfc_holdoff_quanta_0	RW	0x0	pfc_holdoff_quanta_*n* specifies the gap between consecutive XOFF requests for priority queue *n*. The gap is in unit of holdoff quanta, where 1 holdoff quanta = 512 bits time. Bits 16 to 31 are reserved.
0x1191	pfc_holdoff_quanta_1	RW	0x0	
0x1192	pfc_holdoff_quanta_2	RW	0x0	
0x1193	pfc_holdoff_quanta_3	RW	0x0	
0x1194	pfc_holdoff_quanta_4	RW	0x0	
0x1195	pfc_holdoff_quanta_5	RW	0x0	
0x1196	pfc_holdoff_quanta_6	RW	0x0	
0x1197	pfc_holdoff_quanta_7	RW	0x0	
0x1198 – 0x119F	Reserved	—	—	Reserved for future use.
0x11A0	tx_pfc_priority_enable	RW	0x0	Enables PFC for a priority queue on the transmit datapath. ■ Bit 0 to 7: Setting bit *n* in this register enables PFC for priority queue *n*. For example, setting tx_pfc_priority_enable[0] enables PFC for priority queue 0. ■ Bits 8 to 31 are reserved.
0x11A1 – 0x11FF	Reserved	—	—	Reserved for future use.
TX Address Inserter (0x1200:0x127F)				
0x1200	tx_addrins_control	RW	0x0	Address insertion on the transmit datapath. ■ Bit 0 configures address insertion. 0—Disables address insertion on the transmit datapath. 1—Overwrites the source address field of transmit frames with the address configured in the tx_addrins_macaddr0 and tx_addrins_macaddr1 registers. ■ Bits 1 to 31 are reserved.

Table 8–2. MAC Registers (Part 9 of 15)

Word Offset	Register Name	Access	Reset Value	Description
0x1201	tx_addrins_macaddr0	RW	0x0	6-byte MAC address. You must map the address to the registers in the following manner: ■ tx_addrins_macaddr0 = Last four bytes of the address ■ tx_addrins_macaddr1[0:15] = First two bytes of the address. Bits 16 to 31 are reserved. Example: If the primary MAC address is 00-1C-23-17-4A-CB, set tx_addrins_macaddr0 to 0x23174ACB and tx_addrins_macaddr1 to 0x0000001C. The IP core writes this address to the source address field of transmit frames when address insertion on transmit is enabled (refer to description of tx_addrins_control).
0x1202	tx_addrins_macaddr1	RW	0x0	
0x1203 – 0x17FF	Reserved	—	—	Reserved for future use.
TX Frame Decoder (0x1800:0x1BFF)				
0x1800	Reserved	—	—	Reserved for future use.
0x1801	tx_frame_maxlength	RW	1518	■ Bits 0 to 15 specifies the maximum allowable frame length for the statistic counter. The MAC asserts the avalon_st_txstatus_error[1] signal when the length of the transmit frame exceeds the value of this register and flags it as oversized frame. The value of this register does not affect the allowable frame size that can be sent through the Tx path. ■ Bits 16 to 31 are reserved.
0x1802 – 0x1BFF	Reserved	—	—	Reserved for future use.
RX Statistics Counters (0x0C00:0x0FFF)—Collect statistics on the receive path. Prefixed with rx_. *(1)*, *(2)* TX Statistics Counters (0x1C00:0x1FFF)—Collect statistics on the transmit path. Prefixed with tx_.				
0x0C00	rx_stats_clr	RWC	0x0	■ Bit 0—Set this register to 1 to clear all statistics counters for the receive path. ■ Bits 1 to 31 are reserved.
0x1C00	tx_stats_clr	RWC	0x0	■ Bit 0—Set this register to 1 to clear all statistics counters for the transmit path. ■ Bits 1 to 31 are reserved.
0x0C01	Reserved	—	—	Reserved for future use.
0x1C01				

Table 8–2. MAC Registers (Part 10 of 15)

Word Offset	Register Name	Access	Reset Value	Description
0x0C02	rx_stats_framesOK	RO	0x0	■ Bit 0—The number of frames that are successfully received or transmitted, including control frames. ■ 36-bit width register: ■ 0x0C02 and 0x1C02 = bits [31:0] ■ 0x0C03 and 0x1C03 = bits [35:32]
0x0C03				
0x1C02	tx_stats_framesOK			
0x1C03				
0x0C04	rx_stats_framesErr *(3)*	RO	0x0	■ Bit 0—The number of errored frames that are received or transmitted, including control frames. ■ 36-bit width register: ■ 0x0C04 and 0x1C04 = bits [31:0] ■ 0x0C05and 0x1C05 = bits [35:32]
0x0C05				
0x1C04	tx_stats_framesErr *(3)*			
0x1C05				
0x0C06	rx_stats_framesCRCErr	RO	0x0	■ Bit 0—The number of receive or transmit frames with only CRC error. ■ 36-bit width register: ■ 0x0C06 and 0x1C06 = bits [31:0] ■ 0x0C07 and 0x1C07 = bits [35:32]
0x0C07				
0x1C06	tx_stats_framesCRCErr			
0x1C07				
0x0C08	rx_stats_octetsOK	RO	0x0	■ Bit 0—The number of data and padding octets that are successfully received or transmitted, including control frames.
0x0C09				
0x1C08	tx_stats_octetsOK			
0x1C09				
0x0C0A	rx_stats_pauseMACCtrl Frames	RO	0x0	■ Bit 0—The number of valid pause frames received or transmitted. ■ 36-bit width register: ■ 0x0C0A and 0x0C0B = bits [31:0] ■ 0x1C0A and 0x1C0B = bits [35:32]
0x0C0B				
0x1C0A	tx_stats_pauseMACCtrl Frames			
0x1C0B				
0x0C0C	rx_stats_ifErrors	RO	0x0	■ Bit 0—The number of errored and invalid frames received or transmitted. ■ 36-bit width register: ■ 0x0C0C and 0x0C0D = bits [31:0] ■ 0x1C0C and 0x1C0D = bits [35:32]
0x0C0D				
0x1C0C	tx_stats_ifErrors			
0x1C0D				
0x0C0E	rx_stats_unicast FramesOK	RO	0x0	■ Bit 0—The number of good unicast frames that are successfully received or transmitted, excluding control frames. ■ 36-bit width register: ■ 0x0C0E and 0x0C0F = bits [31:0] ■ 0x1C0E and 0x1C0F = bits [35:32]
0x0C0F				
0x1C0E	tx_stats_unicast FramesOK			
0x1C0F				

Table 8–2. MAC Registers (Part 11 of 15)

Word Offset	Register Name	Access	Reset Value	Description
0x0C10	rx_stats_unicast FramesErr *(3)*	RO	0x0	■ Bit 0—The number of errored unicast frames received or transmitted, excluding control frames. ■ 36-bit width register: ■ 0x0C10 and 0x0C11 = bits [31:0] ■ 0x1C10 and 0x1C11 = bits [35:32]
0x0C11				
0x1C10	tx_stats_unicast FramesErr *(3)*			
0x1C11				
0x0C12	rx_stats_multicast FramesOK	RO	0x0	■ Bit 0—The number of good multicast frames that are successfully received or transmitted, excluding control frames. ■ 36-bit width register: ■ 0x0C12 and 0x0C13 = bits [31:0] ■ 0x1C12 and 0x1C13 = bits [35:32]
0x0C13				
0x1C12	tx_stats_multicast FramesOK			
0x1C13				
0x0C14	rx_stats_multicast FramesErr *(3)*	RO	0x0	■ Bit 0—The number of errored multicast frames received or transmitted, excluding control frames. ■ 36-bit width register: ■ 0x0C14 and 0x0C15 = bits [31:0] ■ 0x1C14 and 0x1C15 = bits [35:32]
0x0C15				
0x1C14	tx_stats_multicast FramesErr *(3)*			
0x1C15				
0x0C16	rx_stats_broadcast FramesOK	RO	0x0	■ Bit 0—The number of good broadcast frames received or transmitted, excluding control frames. ■ 36-bit width register: ■ 0x0C16 and 0x0C17 = bits [31:0] ■ 0x1C16 and 0x1C17 = bits [35:32]
0x0C17				
0x1C16	tx_stats_broadcast FramesOK			
0x1C17				
0x0C18	rx_stats_broadcast FramesErr *(3)*	RO	0x0	■ Bit 0—The number of errored broadcast frames received or transmitted, excluding control frames. ■ 36-bit width register: ■ 0x0C18 and 0x0C19 = bits [31:0] ■ 0x1C18 and 0x1C19 = bits [35:32]
0x0C19				
0x1C18	tx_stats_broadcast FramesErr *(3)*			
0x1C19				
0x0C1A	rx_stats_etherStats Octets	RO	0x0	■ Bit 0—The total number of octets received or transmitted. This count includes good, errored, and invalid frames.
0x0C1B				
0x1C1A	tx_stats_etherStats Octets			
0x1C1B				
0x0C1C	rx_stats_etherStatsPkts	RO	0x0	■ Bit 0—The total number of good, errored, and invalid frames received or transmitted. ■ 36-bit width register: ■ 0x0C1C and 0x0C1D = bits [31:0] ■ 0x1C1C and 0x1C1D = bits [35:32]
0x0C1D				
0x1C1C	tx_stats_etherStatsPkts			
0x1C1D				

Table 8–2. MAC Registers (Part 12 of 15)

Word Offset	Register Name	Access	Reset Value	Description
0x0C1E 0x0C1F	rx_stats_etherStats UndersizePkts	RO	0x0	■ Bit 0—The number of undersized frames (frame length less than 64 bytes, including the CRC field) received or transmitted. ■ 36-bit width register: ■ 0x0C1E and 0x0C1F = bits [31:0] ■ 0x1C1E and 0x1C1F = bits [35:32] ■ If you set the statistics counters to memory-based implementation, it takes a longer processing time to update the registers. The number of undersized frames received or transmitted may not increment if they need to be updated multiple times in a short period.
0x1C1E 0x1C1F	tx_stats_etherStats UndersizePkts			
0x0C20 0x0C21	rx_stats_etherStats OversizePkts	RO	0x0	■ Bit 0—The number of oversized frames (frame length more than rx_frame_maxlength, including the CRC field) received. ■ 36-bit width register: ■ 0x0C20 = bits [31:0] ■ 0x0C21 = bits [35:32]
0x1C20 0x1C21	tx_stats_etherStats OversizePkts	RO	0x0	■ Bit 0—The number of oversized frames (frame length more than tx_frame_maxlength, including the CRC field) transmitted. ■ 36-bit width register: ■ 0x1C20 = bits [31:0] ■ 0x1C21= bits [35:32]
0x0C22 0x0C23	rx_stats_etherStats Pkts64Octets	RO	0x0	■ Bit 0—The number of 64-byte receive or transmit frames, including the CRC field but excluding the preamble and SFD bytes. This count includes good, errored, and invalid frames. ■ 36-bit width register: ■ 0x0C22 and 0x0C23 = bits [31:0] ■ 0x1C22 and 0x1C23 = bits [35:32]
0x1C22 0x1C23	tx_stats_etherStats Pkts64Octets			
0x0C24 0x0C25	rx_stats_etherStats Pkts65to127Octets	RO	0x0	■ Bit 0—The number of receive or transmit frames between the length of 65 and 127 bytes, including the CRC field but excluding the preamble and SFD bytes. This count includes good, errored, and invalid frames. ■ 36-bit width register: ■ 0x0C24 and 0x0C25 = bits [31:0] ■ 0x1C24 and 0x1C25 = bits [35:32]
0x1C24 0x1C25	tx_stats_etherStats Pkts65to127Octets			

Table 8–2. MAC Registers (Part 13 of 15)

Word Offset	Register Name	Access	Reset Value	Description
0x0C26 0x0C27	rx_stats_etherStats Pkts128to255Octets	RO	0x0	■ Bit 0—The number of receive or transmit frames between the length of 128 and 255 bytes, including the CRC field but excluding the preamble and SFD bytes. This count includes good, errored, and invalid frames. ■ 36-bit width register: ■ 0x0C26 and 0x0C27 = bits [31:0] ■ 0x1C26 and 0x1C27 = bits [35:32]
0x1C26 0x1C27	tx_stats_etherStats Pkts128to255Octets			
0x0C28 0x0C29	rx_stats_etherStats Pkts256to511Octets	RO	0x0	■ Bit 0—The number of receive or transmit frames between the length of 256 and 511 bytes, including the CRC field but excluding the preamble and SFD bytes. This count includes good, errored, and invalid frames. ■ 36-bit width register: ■ 0x0C28 and 0x0C29 = bits [31:0] ■ 0x1C28 and 0x1C29 = bits [35:32]
0x1C28 0x1C29	tx_stats_etherStats Pkts256to511Octets			
0x0C2A 0x0C2B	rx_stats_etherStats Pkts512to1023Octets	RO	0x0	■ Bit 0—The number of receive or transmit frames between the length of 512 and 1,023 bytes, including the CRC field but excluding the preamble and SFD bytes. This count includes good, errored, and invalid frames. ■ 36-bit width register: ■ 0x0C2A and 0x0C2B = bits [31:0] ■ 0x1C2A and 0x1C2B = bits [35:32]
0x1C2A 0x1C2B	tx_stats_etherStats Pkts512to1023Octets			
0x0C2C 0x0C2F	rx_stats_etherStat Pkts1024to1518Octets	RO	0x0	■ Bit 0—The number of receive or transmit frames between the length of 1,024 and 1,518 bytes, including the CRC field but excluding the preamble and SFD bytes. This count includes good, errored, and invalid frames. ■ 36-bit width register: ■ 0x0C2C and 0x0C2F = bits [31:0] ■ 0x1C20 and 0x1C21 = bits [35:32]
0x1C20 0x1C21	tx_stats_etherStat Pkts1024to1518Octets			
0x0C2E 0x0C2F	rx_stats_etherStats Pkts1519toXOctets	RO	0x0	■ Bit 0—The number of receive or transmit frames equal or more than the length of 1,519 bytes, including the CRC field but excluding the preamble and SFD bytes. This count includes good, errored, and invalid frames. ■ 36-bit width register: ■ 0x0C2E and 0x0C2F = bits [31:0] ■ 0x1C2E and 0x1C2F = bits [35:32]
0x1C2E 0x1C2F	tx_stats_etherStats Pkts1519toXOctets			

Table 8–2. MAC Registers (Part 14 of 15)

Word Offset	Register Name	Access	Reset Value	Description
0x0C30 0x0C31	rx_stats_etherStats Fragments	RO	0x0	■ Bit 0—The total number of receive or transmit frames with length less than 64 bytes and CRC error. This count includes errored and invalid frames. ■ 36-bit width register: ■ 0x0C30 and 0x0C31 = bits [31:0] ■ 0x1C30 and 0x1C31 = bits [35:32]
0x1C30 0x1C31	tx_stats_etherStats Fragments			
0x0C32 0x0C33	rx_stats_etherStats Jabbers	RO	0x0	■ Bit 0—The number of oversized receive frames (frame length more than rx_frame_maxlength) with CRC error. This count includes invalid frame types. ■ 36-bit width register: ■ 0x0C32 = bits [31:0] ■ 0x0C33 = bits [35:32]
0x1C32 0x1C33	tx_stats_etherStats Jabbers	RO	0x0	■ Bit 0—The number of oversized transmit frames (frame length more than 1,518 bytes) with CRC error. This count includes invalid frame types. ■ 36-bit width register: ■ 0x1C32 = bits [31:0] ■ 0x1C33 = bits [35:32]
0x0C34 0x0C35	rx_stats_etherStats CRCErr	RO	0x0	■ Bit 0—The number of receive frames between the length of 64 and the value configured in the rx_frame_maxlength register with CRC error. This count includes errored and invalid frames. ■ 36-bit width register: ■ 0x0C34 = bits [31:0] ■ 0x0C35 = bits [35:32]
0x1C34 0x1C35	tx_stats_etherStats CRCErr	RO	0x0	■ Bit 0—The number of transmit frames between the length of 64 and 1,518 bytes. This count includes errored and invalid frames. ■ 36-bit width register: ■ 0x1C34 = bits [31:0] ■ 0x1C35 = bits [35:32]
0x0C36 0x0C37	rx_stats_unicastMAC CtrlFrames	RO	0x0	■ Bit 0—The number of valid unicast control frames received or transmitted. ■ 36-bit width register: ■ 0x0C36 and 0x0C37 = bits [31:0] ■ 0x1C36 and 0x1C37 = bits [35:32]
0x1C36 0x1C37	tx_stats_unicastMAC CtrlFrames			

Table 8–2. MAC Registers (Part 15 of 15)

Word Offset	Register Name	Access	Reset Value	Description
0x0C38	rx_stats_multicastMAC CtrlFrames	RO	0x0	■ Bit 0—The number of valid multicast control frames received or transmitted. ■ 36-bit width register: ■ 0x0C38 and 0x0C39 = bits [31:0] ■ 0x1C38 and 0x1C39 = bits [35:32]
0x0C39				
0x1C38	tx_stats_multicastMAC CtrlFrames			
0x1C39				
0x0C3A	rx_stats_broadcastMAC CtrlFrames	RO	0x0	■ Bit 0—The number of valid broadcast control frames received or transmitted. ■ 36-bit width register: ■ 0x0C3A and 0x0C3B = bits [31:0] ■ 0x1C3A and 0x1C3B = bits [35:32]
0x0C3B				
0x1C3A	tx_stats_broadcastMAC CtrlFrames			
0x1C3B				
0x0C3C	rx_stats_PFCMACCtrlFrames	RO	0x0	■ Bit 0—The number of valid PFC frames received or transmitted. ■ 36-bit width register: ■ 0x0C3C and 0x0C3D = bits [31:0] ■ 0x1C3C and 0x1C3D = bits [35:32]
0x0C3D				
0x1C3C	tx_stats_PFCMACCtrlFrames			
0x1C3D				
0x0C3E – 0x0FFF	Reserved	—	—	Reserved for future use.
0x1C3E – 0x1FFF				

Notes to Table 8–2:

(1) The statistic registers are only available when you turn on the **Enable statistics collection** parameter.

(2) When you read the statistic counters, read the LSB before reading the MSB. For example, when you read rx_stats_PFCMACCtrlFrames, read the register offset 0x0C3C before reading the register offset 0x0C3D.

(3) If you set the statistics counters to memory-based implementation, the number of undersized frames received or transmitted is not incremented for this register. This is due to the limited processing time when undersized frames are received or transmitted.

8.1.1. Rx_frame_control Register

Table 8–3 describes the function of each field in the rx_frame_control register.

Table 8–3. Rx_frame_control Register (Part 1 of 2)

Bit	Field Name	Width	Access	Reset Value	Description
0	EN_ALLUCAST	1	RW	0x1	0—Drops unicast receive frames using the primary MAC addresses. 1—Accepts all unicast receive frames. Setting this register and the EN_ALLMCAST register to 1, enables the MAC to go on promiscuous (transparent) mode.
1	EN_ALLMCAST	1	RW	0x1	0—Drops all multicast frames. 1—Accepts all multicast frames. Setting this register and the EN_ALLUCAST register to 1, enables the MAC to go on promiscuous (transparent) mode.

Table 8–3. Rx_frame_control Register (Part 2 of 2)

Bit	Field Name	Width	Access	Reset Value	Description
2	Reserved	1	—	—	Reserved for future use.
3	FWD_CONTROL	1	RW	0x0	When you turn on the **Priority-based Flow Control (PFC)** parameter, this bit affects all control frames except the IEEE 802.3 pause frames and PFC frames. Otherwise, this bit affects all control frames except the IEEE 802.3 pause frames. 0—Drops control frames. 1—Forwards control frames to the client.
4	FWD_PAUSE	1	RW	0x0	0—Drops IEEE 802.3 pause frame after processing them. 1—Forwards IEEE 802.3 pause frames to the client.
5	IGNORE_PAUSE	1	RW	0x0	0—Suspends transmission for the value specified by the pause quanta in the IEEE 802.3 pause frame received. 1—Ignores IEEE 802.3 pause frames.
6 – 15	Reserved	—	—	—	Reserved for future use.
16	EN_SUPP0	1	RW	0x0	0—Disables the use of supplementary address 0. 1—Enables the use of supplementary address 0.
17	EN_SUPP1	1	RW	0x0	0—Disables the use of supplementary address 1. 1—Enables the use of supplementary address 1.
18	EN_SUPP2	1	RW	0x0	0—Disables the use of supplementary address 2. 1—Enables the use of supplementary address 2.
19	EN_SUPP3	1	RW	0x0	0—Disables the use of supplementary address 3. 1—Enables the use of supplementary address 3.
20 – 31	Reserved	—	—	—	Reserved for future use.

8.1.2. Rx_pfc_control Register

Table 8–4 describes the function of each field in the rx_pfc_control register.

Table 8–4. Rx_pfc_control Register

Bit	Field Name	Width	Access	Reset Value	Description
0	PFC_IGNORE_PAUSE_0	1	RW	0x1	0—Suspends transmission for TX priority queue *n* for the period specified by pfc_pause_quanta_n. 1—Ignores the PFC pause request for TX priority queue *n*.
1	PFC_IGNORE_PAUSE_1	1	RW	0x1	
2	PFC_IGNORE_PAUSE_2	1	RW	0x1	
3	PFC_IGNORE_PAUSE_3	1	RW	0x1	
4	PFC_IGNORE_PAUSE_4	1	RW	0x1	
5	PFC_IGNORE_PAUSE_5	1	RW	0x1	
6	PFC_IGNORE_PAUSE_6	1	RW	0x1	
7	PFC_IGNORE_PAUSE_7	1	RW	0x1	
8 – 15	Reserved	—	—	—	Reserved for future use.

Table 8–4. Rx_pfc_control Register

Bit	Field Name	Width	Access	Reset Value	Description
16	FWD_PFC	1	RW	0x0	0—Drops the PFC frame after processing it. 1—Forwards the PFC frame to the client.
16 – 31	Reserved	—	—	—	Reserved for future use.

8.2. MAC Registers for IEEE 1588v2 Feature

Table 8–5 describes the MAC register space for the 10GbE MAC with IEEE 1588v2 feature.

Table 8–5. MAC Registers for 1GbE MAC with IEEE 1588v2 Feature (Part 1 of 2)

Word Offset	Name	R/W	Description	HW Reset
0x0110 (10 Gbps mode)/ 0x0118 (1 Gbps, 10 Mbps, and 100 Mbps mode)	rx_period	RW	Clock period for timestamp adjustment on the receive datapath. The period register is multiplied by the number of stages separating actual timestamp and the GMII bus. ■ Bits 0 to 15: Period in fractional nanoseconds (RX_PERIOD_FNS). ■ Bits 16 to 19: Period in nanoseconds (RX_PERIOD_NS). ■ Bits 20 to 31: Not used. The default value for the period is 6.4. For 156.25-MHz clock, set this register to 6.4 ns.	0x66666
0x1110 (10 Gbps mode)/ 0x1118 (1 Gbps, 10 Mbps, and 100M bps mode))	tx_period	RW	Clock period for timestamp adjustment on the transmit datapath. The period register is multiplied by the number of stages separating actual timestamp and the GMII bus. ■ Bits 0 to 15: Period in fractional nanoseconds (TX_PERIOD_FNS). ■ Bits 16 to 19: Period in nanoseconds (TX_PERIOD_NS). ■ Bits 20 to 31: Not used. The default value for the period is 6.4. For 156.25-MHz clock, set this register to 6.4 ns.	0x66666
0x0112 (10 Gbps mode)/ 0x011A (1 Gbps, 10 Mbps, and 100 Mbps mode)	rx_adjust_fns	RW	Static timing adjustment in fractional nanoseconds for outbound timestamps on the receive datapath. ■ Bits 0 to 15: Timing adjustment in fractional nanoseconds. ■ Bits 16 to 31: Not used.	0x0

Table 8–5. MAC Registers for 1GbE MAC with IEEE 1588v2 Feature (Part 2 of 2)

Word Offset	Name	R/W	Description	HW Reset
0x1112 (10 Gbps mode)/ 0x111A (1 Gbps, 10 Mbps, and 100 Mbps mode)	tx_adjust_fns	RW	Static timing adjustment in fractional nanoseconds for outbound timestamps on the transmit datapath. ■ Bits 0 to 15: Timing adjustment in fractional nanoseconds. ■ Bits 16 to 31: Not used.	0x0
0x0113 (10 Gbps mode)/ 0x011B (1 Gbps, 10 Mbps, and 100 Mbps mode)	rx_adjust_ns	RW	Static timing adjustment in nanoseconds for outbound timestamps on the receive datapath. ■ Bits 0 to 15: Timing adjustment in nanoseconds. ■ Bits 16 to 23: Not used.	0x0
0x1113 (10 Gbps mode)/ 0x111B (1 Gbps, 10 Mbps, and 100 Mbps mode)	tx_adjust_ns	RW	Static timing adjustment in nanoseconds for outbound timestamps on the transmit datapath. ■ Bits 0 to 15: Timing adjustment in nanoseconds. ■ Bits 16 to 23: Not used.	0x0

8.2.1. Configuring PMA Analog and Digital Delay

You need to configure the PMA analog and digital delay to adjust the registers. The TX and RX paths are configured individually.

Table 8–6 lists the analog delay for the different MAC variants.

Table 8–6. Analog Delay

Device Family	TX (ns)	RX (ns)	MAC Variant
Arria V	–1.1	1.75	All
Stratix V	–1.1	1.75	All

Table 8–7 lists the digital delay for the different MAC variants.

Table 8–7. Digital Delay

Device Family	PMA Mode (bit)	TX (UI)	RX (UI)	MAC Variant
Arria V GZ and Stratix V	40	41	150.5	10GbE or 10G of 10M-10GbE
	32	33	196	10GbE
	10	11	33.5	1G/100M/10M of 10M-10GbE
Arria V GX, Arria V GT, and Arria V SoC	64	62	259	10GbE or 10G of 10M-10GbE
	10	10	23.5	1G/100M/10M of 10M-10GbE
Arria 10	40	151.5	65.5	10GbE or 10G of 10M-10GbE
	10	32	23.5	1G/100M/10M of 10M-10GbE



1 UI for 10G is 97 ps, and 1 UI for 1G/100M/10M is 800 ps.

8.3. Register Initialization

Altera offers the following options for the 10GbE solution with the 10G MAC IP core:

- 10GbE MAC with single data rate (SDR) XGMII
- 10GbE MAC with double data rate (DDR) XGMII
- 10GbE MAC with XAUI PHY IP
- 10GbE MAC with 10GBASE-R PHY IP



To learn more about the 10G MAC with SDR XGMII to DDR XGMII conversion, refer to "SDR XGMII to DDR XGMII Conversion" on page 10–1.

The 10G MAC is configured in promiscuous (transparent) mode at default or after a hard reset. In promiscuous mode, the 10GbE MAC does not perform any MAC address filtering and it is capable of transmitting and receiving all types of Ethernet frames.

Register initialization for the 10GbE MAC design example is mainly performed in the following configurations:

- External PHY Initialization Using MDIO (Optional)
- PHY Configuration Register Initialization
- Miscellaneous Configuration Register Initialization
- MAC Configuration Register Initialization



For more information about the 10GbE MAC design example, refer to the "Design Examples and Testbench"chapter.

To initialize the registers for the 10GbE MAC configuration, it is important for you to understand the usage of the addressing mode. This configuration uses the following addressing modes:

- 10GbE MAC MAC IP Core—dword addressing
- 10GbE design example—byte addressing

You can easily convert between dword and byte addressing by removing or adding two least significant bits (LSB) in the address. For example, if dword = 0x341, you can add two LSB bits to the byte address conversion to get byte address = 0xD04.

Use the following recommended register initialization sequences for 10GbE MAC design example:

1. External PHY initialization using MDIO

   This is only applicable when you require external PHY transceiver configuration.

```
//Assume:
//External PHY Address (Hardwired) (MDIO_PRTAD): 0x01
//External PHY Device Type (MDIO_DEVAD): 0x01
//External PHY Control Register address (MDIO_REGAD): 0x0000
//MDIO Base Address: 0x00010000
//MDIO Register Byte offset: 0x84 Byte Address, 0x00010084 = 0x00000104
```

```
//Read/Write to External PHY Control Register define in MDIO_REGAD
//MDIO Base Address: 0x00010000
//MDIO Register Byte offset: 0x80
Read/write to Byte Address, 0x00010080 = Read/write to PHY Control
Register (Device Address = 0x01, Register Address = 0x0000)
```

2. PHY configuration register initialization

   Altera provides various types of Ethernet PHY such as XAUI and 10GBASE-R PHY. By default, the PHY does not need any configuration register initialization. To ensure the transceiver PHY is operating properly, perform a hard reset to the PHY after a power-up sequence.

```
//Hard Reset the Altera Transceiver PHY
Asserted the phy_mgmt_reset input at least more than 3 phy_mgmt_clk
cycles.
De-assert the phy_mgmt_reset input to release the hard reset

//Wait for the Transceiver PHY Reset Sequence to Complete
Wait the tx_ready and rx_ready outputs = 1
```

Or

```
//Check the tx_read and rx_ready status through PHY Management Interface
//XAUI/10G BASE-R PHY Base Address: 0x00040000
//reset_status byte addres: 0x108
//reset_status bit 0 - tx_ready, bit 1 - rx_ready
Wait reset_status (address = 0x00040108) = 0x3
```

3. Miscellaneous configuration register initialization

   This is only applicable to the 10GbE MAC design example. The following components in the design example is categorized under the miscellaneous configuration register initialization:

- TX and RX single-clock FIFO/dual clock FIFO

  a. Setting for single-clock FIFO

```
//RX FIFO Base Address: 0x00010400
//TX FIFO Base Address: 0x00010600

//Enable Store and Forward Mode in RX Single-Clock FIFO
//cut_through_threshold byte address: 0x10
//Set this larger than 0 will enable Cut Through mode
cut_throught_threshold (address = 0x00010410) = 0x0

//Enable Store and Forward Mode in TX Single-Clock FIFO
//cut_through_threshold byte address: 0x10
//Set this larger than 0 will enable Cut through mode
cut_through_threshold (address = 0x00010610) = 0x0
```

```
//Enable FIFO Frame Drop On Error
//Drop on Error is NOT available in Cut Through Mode
//drop_on_error byte address: 0x14
//Set this to 0 will disable the drop on error
drop_on_error (address = 0x00010414) = 0x1

//Enable Drop On Error in TX Single Clock FIFO
//Drop on Error is NOT available in Cut Through Mode
//drop_on_error byte address: 0x14
//Set this to 0 will disable the drop on error
drop_on_error (address = 0x00010614) = 0x1
```

b. Setting for dual-clock FIFO

Because the drop on error and store and forward features are not supported, you are not required to perform any register initialization.

- Ethernet loopback

```
//Ethernet Loopback Base Address: 0x00010200

//Disable Line Loopback
//line_loopback byte address: 0x00
//Set this to 1 will enable the Line loopback
line_loopback (address = 0x00010200) = 0x0
//Disable Local Loopback
//local_loopback byte address: 0x08
//set this to 1 will enable the local loopback
local_loopback (address = 0x00010208) = 0x0
```

4. MAC configuration register initialization

The 10GbE MAC is configured as promiscuous mode by default; therefore it does not require any initialization to transmit and receive Ethernet frames. Use the following recommended initialization sequences for your configuration:

a. Disable MAC transmit and receive datapath

Disable the 10GbE MAC transmit and receive datapath before changing any configuration register.

```
//Disable the MAC Receive Path
//rx_transfer_control byte address: 0x000
rx_transfer_control (address = 0x00000000) = 0x1

//Disable the MAC Transmit Path
//tx_transfer_control byte address: 0x4000
tx_transfer_control (address = 0x00004000) = 0x1
```

```
//Check the MAC Transmit and Receive Path is disable
//rx_transfer_status byte address: 0x004
Wait rx_transfer_status (address = 0x00000004) = 0x1
//tx_transfer_status byte address: 0x4004
Wait tx_transfer_status (address = 0x00004004) = 0x1
```

b. MAC address configuration

```
//Assume MAC address is 00-1C-23-17-4A-CB

//Configure the MAC Receive MAC Address
//rx_frame_addr0 byte address: 0x2008
//rx_frame_addr1 byte address: 0x200C
rx_frame_addr0 (address = 0x00002008) = 0x17231C00
rx_frame_addr1 (address = 0x0000200C) = 0x0000CB4A

//Configure the MAC Transmit MAC Address
//tx_addrins_macaddr0 byte address: 0x4804
//tx_addrins_macaddr1 byte address: 0x4808
tx_addrins_macaddr0 (address = 0x00004804) = 0x17231C00
tx_addrins_macaddr1 (address = 0x00004808) = 0x0000CB4A
```

c. MAC function configuration

```
//Maximum Frame Length is 1518 bytes
//rx_frame_maxlength byte address: 0x2004
rx_frame_maxlength (address = 0x00002004) = 1518

//tx_frame_maxlength byte address: 0x6004
tx_frame_maxlength (address = 0x00006004) = 1518

//Maximum Pause Quanta Value for Flow Control
//tx_pauseframe_quanta byte address: 0x4504
tx_pauseframe_quanta (address = 0x00004504) = 0xFFFF

//CRC and Padding Removal for MAC Receive
//rx_padcrc_control byte address: 0x0100
rx_padcrc_control (address = 0x00000100) = 0x3

//Padding Removal for MAC Transmit
//tx_padins_control byte address: 0x4100
tx_padins_control (address = 0x00004100) = 0x1

//CRC Removal for MAC Transmit
//tx_crcins_control byte address: 0x4200
tx_crcins_control (address = 0x00004200) = 0x3

//TX MAC Address Insertion on Transmit Frame
//tx_addrins_control byte address: 0x4800
tx_addrins_control (address = 0x00004800) = 0x1

//Configure the RX Frame Control Register
//Disable the promiscuous (transparent) mode by setting EN_ALLUCAST bit
to 0
//rx_frame_control byte address: 0x2000
rx_frame_control (address = 0x00002000) = 0x00000002
```

Figure 8–1 shows the settings for the `rx_frame_control` register.

Figure 8–1. Rx_frame_control Register Settings

30..20	19	18	17	16	15..6	5	4	3	2	1	0
Reserved	EN_SUPP3	EN_SUPP2	EN_SUPP1	EN_SUPP0	Reserved	IGNORE_PAUSE	FWD_PAUSE	FWD_CONTROL	Reserved	EN_ALLMCAST	EN_ALLUCAST
0..0	0	0	0	0	0..0	0	0	0	0	1	0

d. Enable MAC transmit and receive datapath.

```
//Enable the MAC Receive Path
//rx_transfer_control byte address: 0x000
rx_transfer_control (address = 0x00000000) = 0x0

//Enable the MAC Transmit Path
//tx_transfer_control byte address: 0x4000
tx_transfer_control (address = 0x00004000) = 0x0

//Check the Transmit and Receive Path is enable
//rx_transfer_status byte address: 0x004
Wait rx_transfer_status (address = 0x00000004) = 0x0

//tx_transfer_status byte address: 0x4004
Wait tx_transfer_status (address = 0x00004004) = 0x0
```

This section describes the interface signals in all MAC variations.

Figure 9–1 shows the interface signals for the MAC TX and RX variation.

Figure 9–1. 10M-10GbE MAC

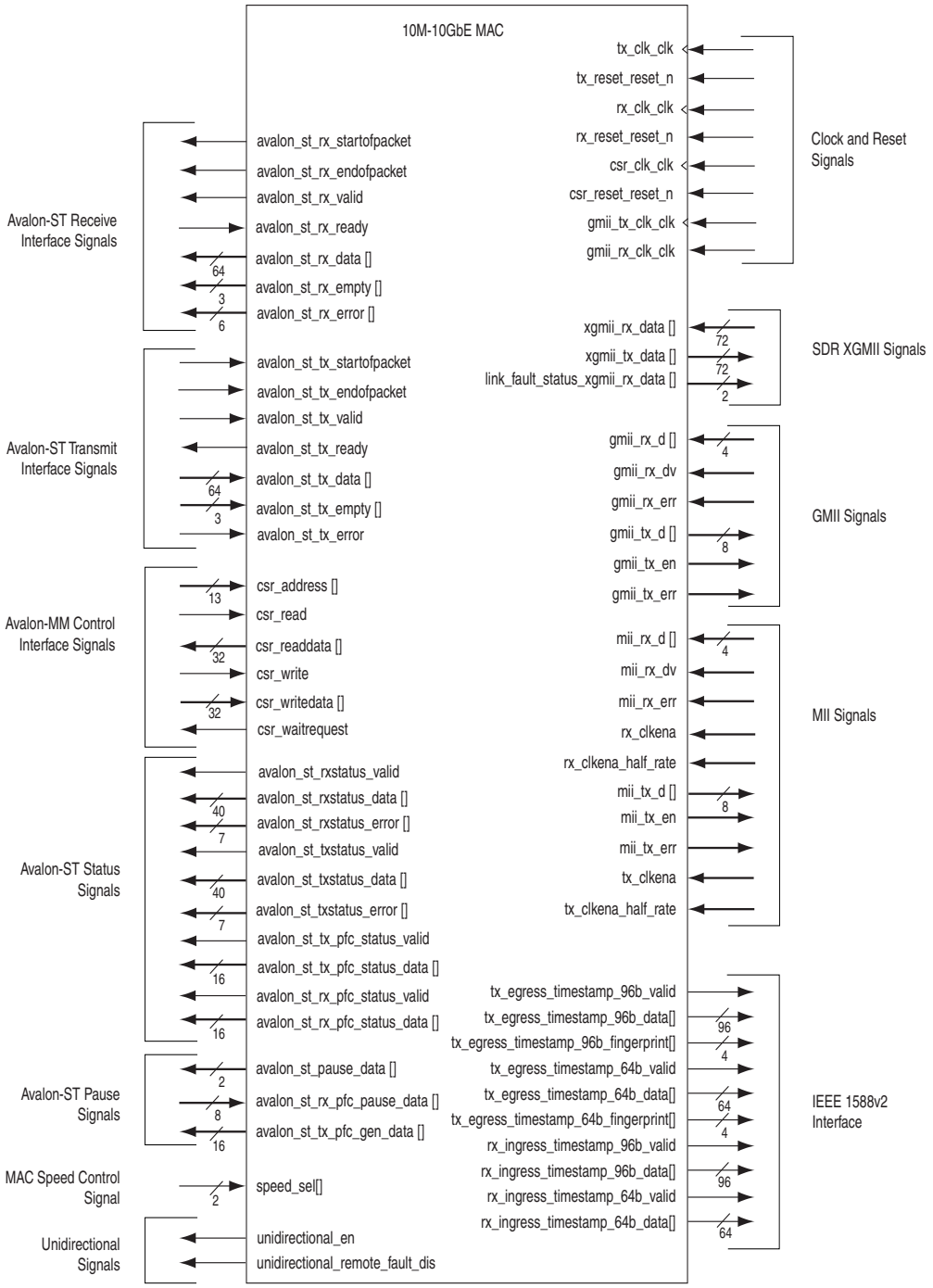

9.0.1. Clock and Reset Signals

The MAC operates in multiple clock domains. You can use different sources to drive the clock and reset interfaces. Refer to Table 9–1 on page 9–2 for the clock and timing requirements for the clock and reset interfaces.

Table 9–1 lists the MAC clock and reset signals.

Table 9–1. Common Clock and Reset Signals

Signal	Direction	Width	Description
tx_clk_clk *(1)*	Input	1	156.25-MHz transmit clock. Provides the timing reference for the Avalon-ST transmit interface.
tx_reset_reset_n	Input	1	An active-low asynchronous reset signal for the tx_clk_clk domain. The MAC function implements a reset synchronizer to generate a synchronous signal.
rx_clk_clk *(1)*	Input	1	156.25-MHz receive clock. Provides the timing reference for the Avalon-ST receive interface.
rx_reset_reset_n	Input	1	An active-low asynchronous reset signal for the rx_clk_clk domain. The MAC function implements a reset synchronizer to generate a synchronous signal.
csr_clk_clk	Input	1	Configuration clock for the control and status interface. The clock runs at 156.25-MHz or lower.
csr_reset_reset_n	Input	1	An active-low reset signal for the control and status interface.

Note to Table 9–1:

(1) You can use the same clock source for both tx_clk_clk and rx_clk_clk.

9.0.2. Avalon-ST Transmit and Receive Interface Signals

Table 9–2 describes the Avalon-ST transmit signals.

Table 9–2. Avalon-ST Transmit Signals

Signal	Direction	Width	Description
avalon_st_tx_startofpacket	Input	1	Assert this signal to indicate the beginning of the transmit packet.
avalon_st_tx_endofpacket	Input	1	Assert this signal to indicate the end of the transmit packet.
avalon_st_tx_valid	Input	1	Assert this signal to qualify the transmit data on the avalon_st_tx_data bus.
avalon_st_tx_ready	Output	1	When asserted, this signal indicates that the IP core is ready to accept data.
avalon_st_tx_data[]	Input	64	Carries the transmit data from the client.
avalon_st_tx_empty[]	Input	3	Use this signal to specify the number of bytes that are empty (not used) during cycles that contain the end of a packet.
avalon_st_tx_error	Input	1	Assert this signal to indicate the current receive packet contains errors.

Table 9–3 describes the Avalon-ST receive signals.

Table 9–3. Avalon-ST Receive Signals

Signal	Direction	Width	Description
avalon_st_rx_startofpacket	Output	1	When asserted, this signal indicates the beginning of the receive packet.
avalon_st_rx_endofpacket	Output	1	When asserted, this signal indicates the end of the receive packet.
avalon_st_rx_valid	Output	1	When asserted, this signal qualifies the receive data on the avalon_st_rx_data bus.
avalon_st_rx_ready	Input	1	Assert this signal when the client is ready to accept data.
avalon_st_rx_data[]	Output	64	Carries the receive data to the client.
avalon_st_rx_empty[]	Output	3	Contains the number of bytes that are empty (not used) during cycles that contain the end of a packet.
avalon_st_rx_error[]	Output	6	When set to 1, the respective bits in this signal indicate an error type in the receive frame: ■ Bit 0: PHY error—Indicates PHY error regardless of the speed you configure. ■ Bit 1: CRC error—The calculated CRC value differs from the received CRC. ■ Bit 2: Undersized frame—The frame size is less than 64 bytes. ■ Bit 3: Oversized frame—The frame size is more than MAX_FRAME_SIZE. ■ Bit 4: Payload length error—The actual frame payload length differs from the length/type field. ■ Bit 5: Overflow error—The FIFO buffer is full while it is receiving signal from the MAC causing truncated receive frame. The IP core presents the error type on this bus in the same clock cycle it asserts avalon_st_rx_endofpacket and avalon_st_rx_valid.

9.0.2.1. Timing Diagrams—Avalon-ST Transmit Interface

The diagrams in this section shows the timing and the mapping on the Avalon-ST transmit interface.

The client asserts the avalon_st_tx_startofpacket signal to indicate the beginning of the transmit packet. On the same rising edge of tx_clk_clk, the client asserts the avalon_st_tx_valid signal to qualify the transmit data on the avalon_st_tx_data[63:0] bus. At the end of the packet, the avalon_st_tx_empty [2:0] signal specifies the number of bytes that are empty.

Figure 9–2 shows the timing for the Avalon-ST transmit interface with a good frame.

Figure 9–2. Avalon-ST Transmit Interface

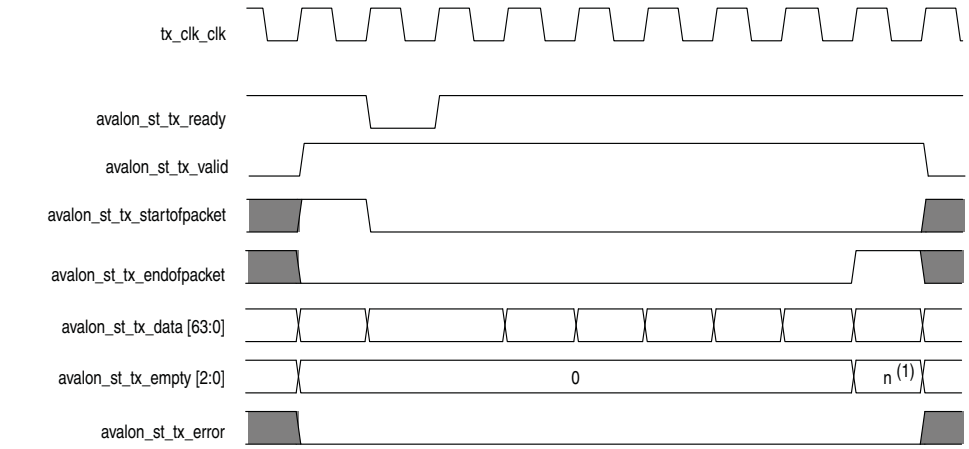

Note to Figure 9–2:

(1) *n* indicates the number of symbols that are empty during the cycles that mark the end of a frame.

When the client forwards an error frame to the Avalon-ST transmit interface, the client asserts the `avalon_st_tx_error` signal to indicate errors in the current frame. The `avalon_st_tx_error` signal is aligned with the `avalon_st_tx_endofpacket` signal.

Figure 9–3 shows the timing for the Avalon-ST transmit interface with an error frame.

Figure 9–3. Avalon-ST Transmit Interface with Error

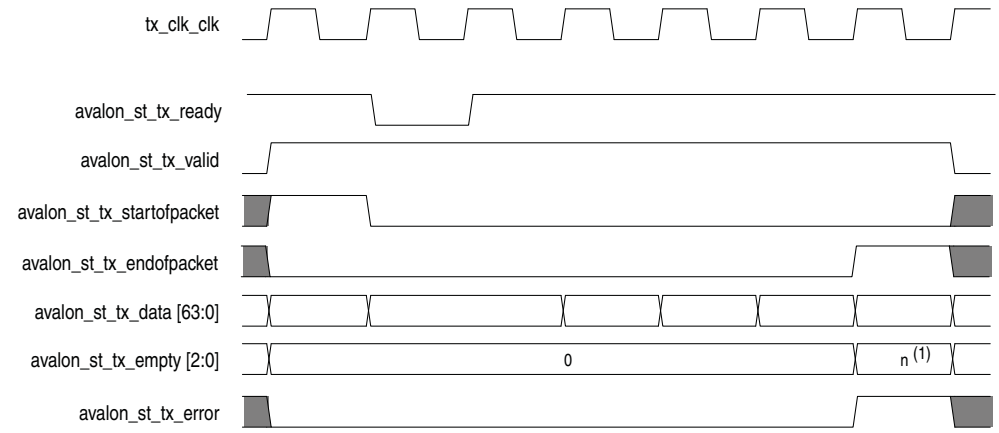

Note to Figure 9–3:

(1) *n* indicates the number of symbols that are empty during the cycles that mark the end of a frame.

Figure 9–4 shows the mapping of the client frame on the Avalon-ST transmit interface.

Figure 9–4. Mapping of Client Frame to Avalon-ST Transmit Interface

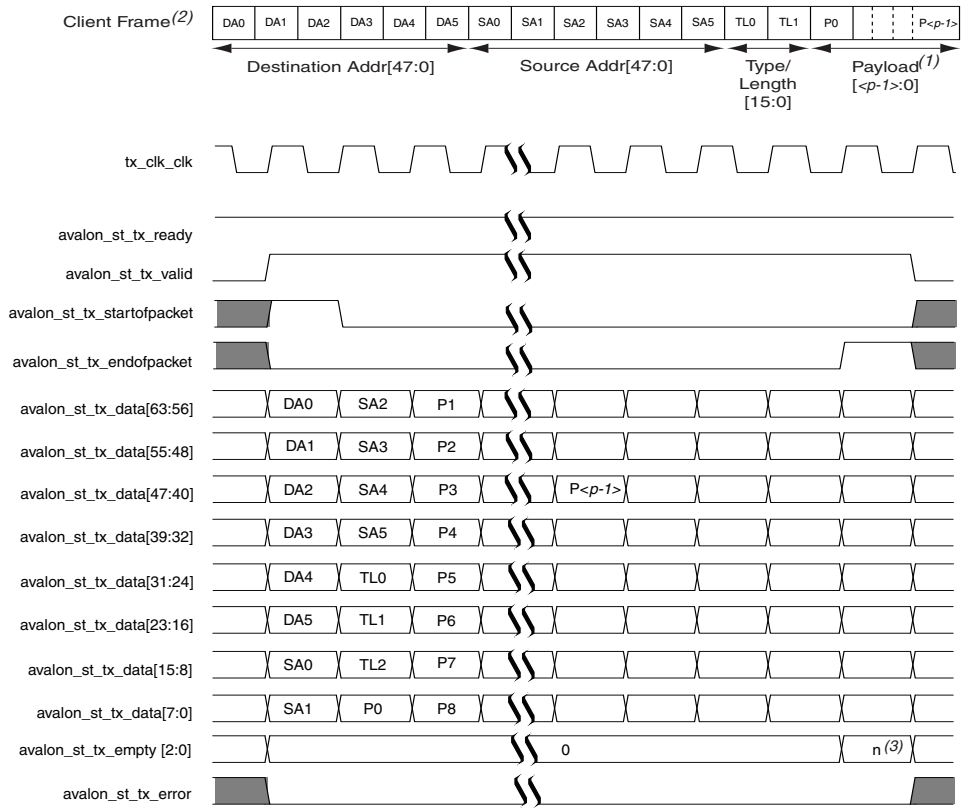

Notes to Figure 9–4:

(1) <*p*> = payload size = 0–1500 bytes

(2) In the preamble passthrough mode, the client frame starts with an 8-byte client-defined preamble.

(3) *n* indicates the number of symbols that are empty during the cycles that mark the end of a frame.

9.0.2.2. Timing Diagrams—Avalon-ST Receive Interface

The diagrams in this section show the timing on the Avalon-ST receive interface.

The Avalon-ST receive interface `avalon_st_rx_startofpacket` signal is asserted to indicate the start of a new frame. On the same rising edge of `rx_clk_clk`, the `avalon_st_rx_valid` signal is also asserted to qualify the transmit data on the `avalon_st_rx_data[63:0]` bus. The end of the receive packet is indicated by the `avalon_st_rx_endofpacket` signal.

Figure 9–5 shows the timing for the Avalon-ST receive interface with a good frame.

Figure 9–5. Avalon-ST Receive

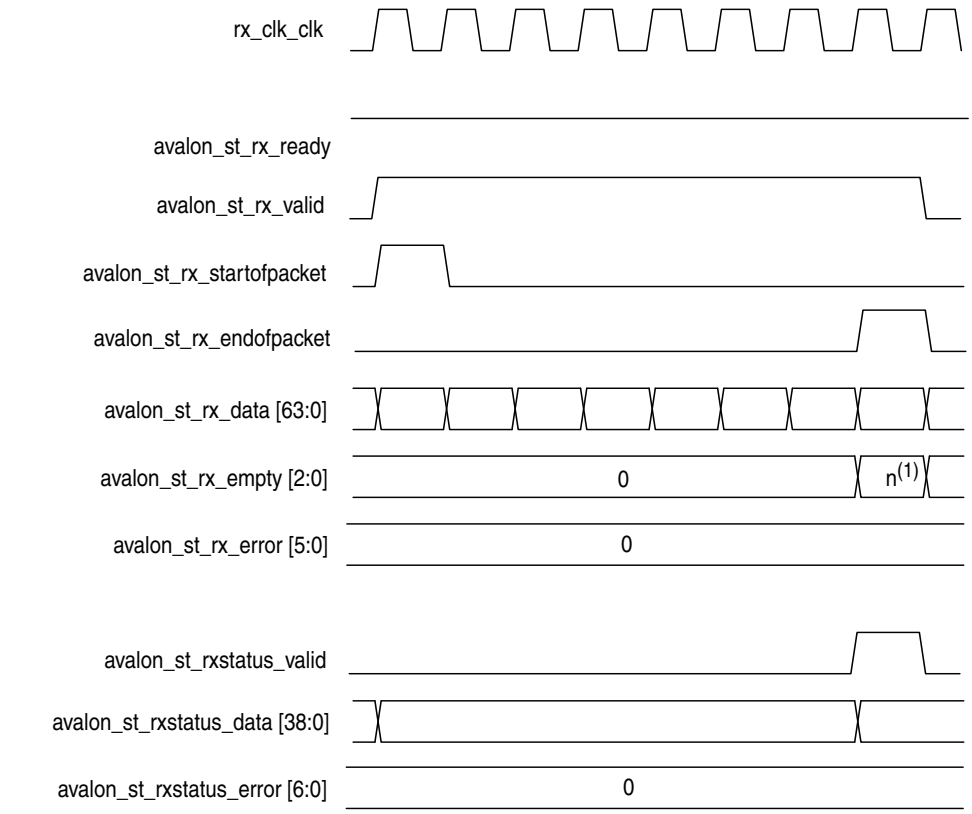

Note to Figure 9–5:

(1) *n* indicates the number of symbols that are empty during the cycles that mark the end of a frame.

When the MAC RX receives an undersized frame, it sets the `avalon_st_rx_error[2]` bit to 1. When an overflow occurs, the `avalon_st_rx_ready` signal is deasserted to backpressure the Avalon-ST receive interface, and the MAC RX sets the `avalon_st_rx_error[5]` bit to 1. The error signals are sampled when `avalon_st_rx_endofpacket` and `avalon_st_rx_valid` signals are asserted.

For more information about the error signals in the Avalon-ST receive and status interface, refer to Table 9–3 on page 9–3 and Table 9–9 on page 9–13.

Figure 9–6 shows the reception of a 60-byte frame at the Avalon-ST receive interface when an error occurs with an overflow and undersized frame condition.

Figure 9–6. Avalon-ST Receive with Error (Overflow and Undersized Frame)

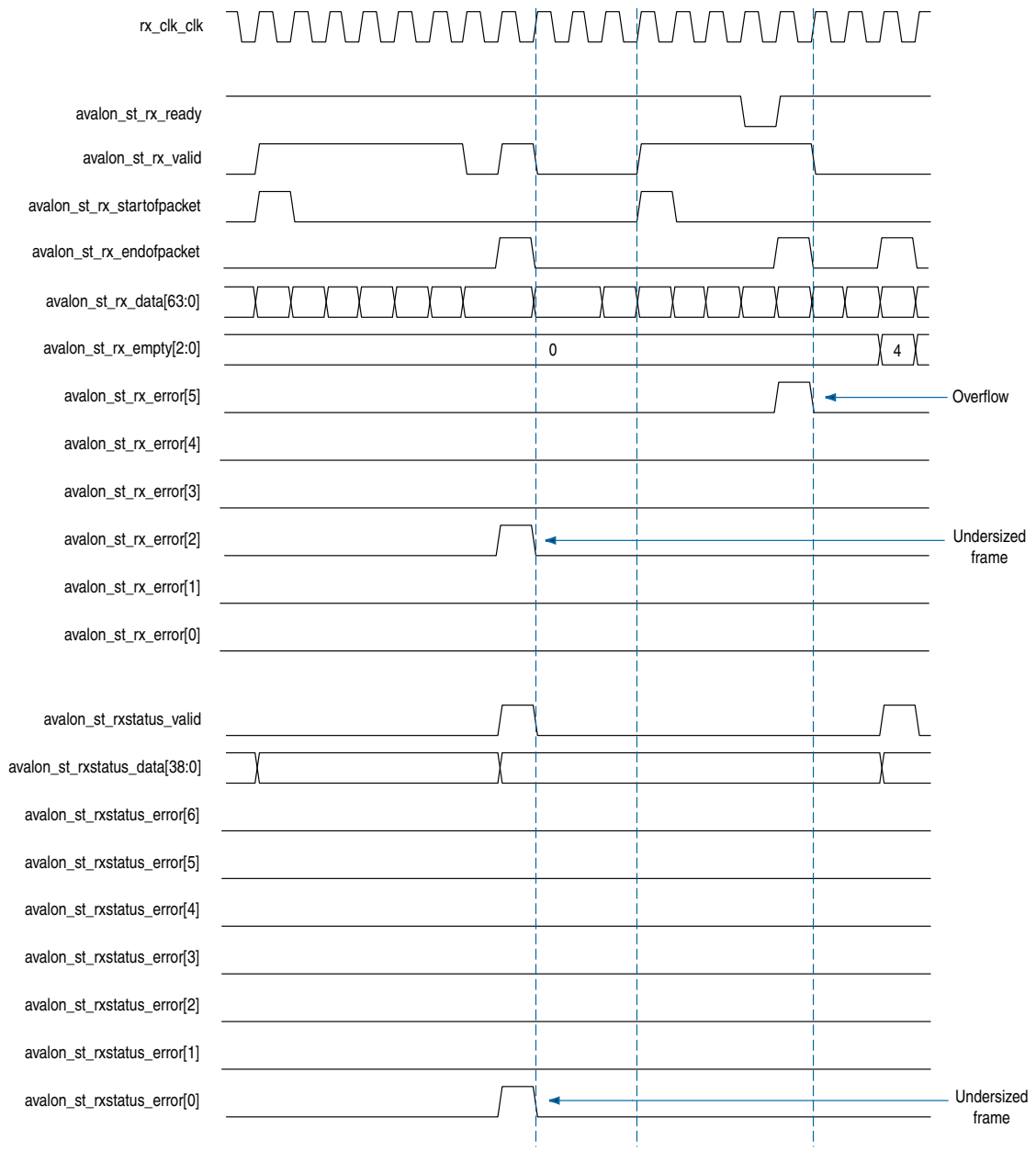

9.0.3. SDR XGMII

Table 9–4 shows the SDR XGMII signals.

Table 9–4. SDR XGMII Signals

Signal	Direction	Width	Description
xgmii_rx_data[]	Input	72	8-lane data bus carrying 8-bit data and 1-bit control information. Lane 0 starts from the least significant bit. xgmii_rx_data[7:0] / xgmii_tx_data[7:0] = data xgmii_rx_data[8] / xgmii_tx_data[8] = control xgmii_rx_data[16:9] / xgmii_tx_data[16:9] = data xgmii_rx_data[17] / xgmii_tx_data[17] = control ... and so forth
xgmii_tx_data[]	Output	72	
link_fault_status_xgmii_rx_data[]	Output	2	Indicates the link fault status from the RS RX to the RS TX. ■ 00 = No link fault. ■ 01 = Local fault. ■ 10 = Remote fault. When you instantiate the MAC RX only variation, connect this signal to the corresponding TX client logic to handle the local and remote faults.
link_fault_status_xgmii_tx_data[]	Input	2	This signal is present only in the MAC TX only variation. Connect this signal to the corresponding RX client logic to handle the local and remote faults. Indicates the link fault status to the RS TX. ■ 00 = No link fault ■ 01 = Local fault ■ 10 = Remote fault

9.0.3.1. Timing Diagrams—SDR XGMII

The diagrams in this section show the timing for the SDR XGMII.

Figure 9–7 shows the timing for the SDR XGMII RX interface data bus.

Figure 9–7. SDR XGMII RX Interface Data Bus

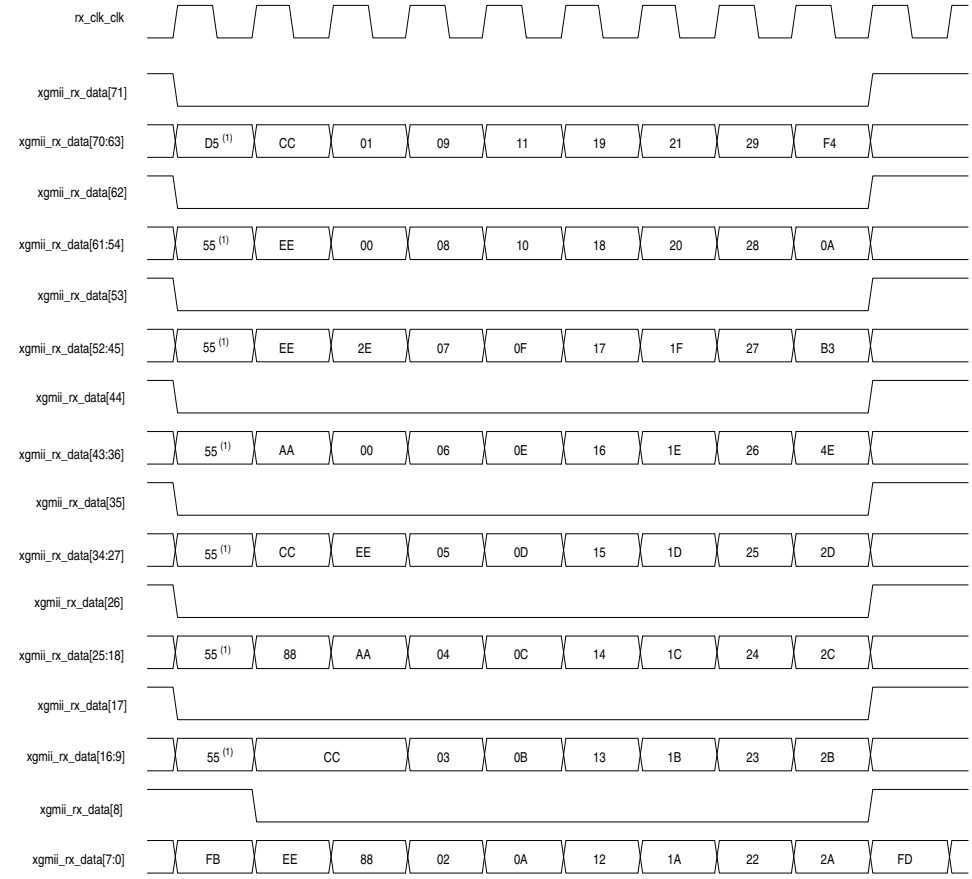

Note to Figure 9–7:

(1) In the preamble passthrough mode, the MAC TX frame starts with a 1-byte START and a 7-byte client-defined preamble.

When an error occurs, the control bit signal is asserted and the data during that clock cycle is replaced by a control error character (FE).

Figure 9–8 shows the timing for the SDR XGMII RX interface when an error occurs.

Figure 9–8. SDR XGMII RX Interface with Error

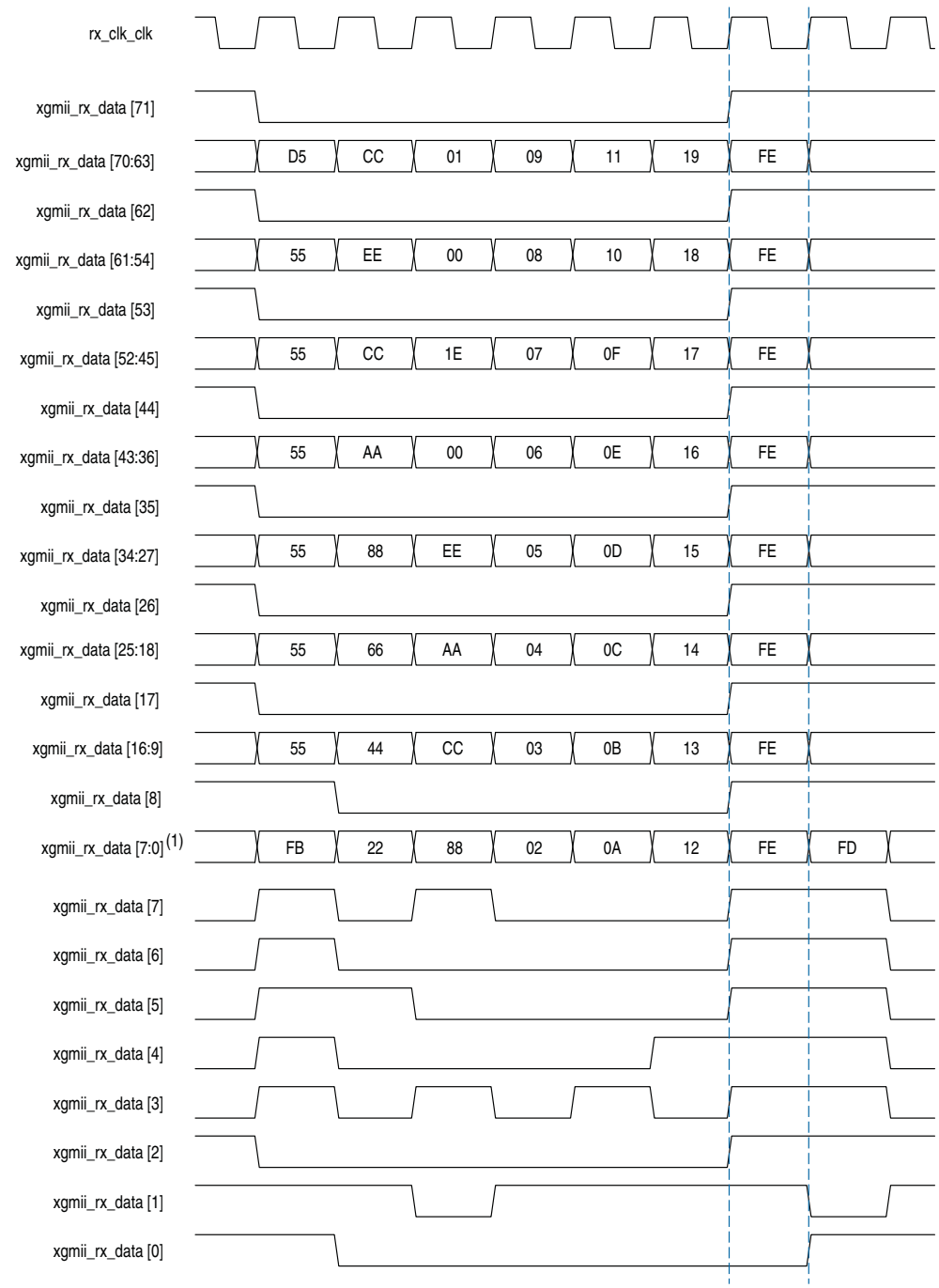

Note to Figure 9–8:

(1) The `xgmii_rx_data[7:0]` bus is expanded to show the behavior of each signal when an error occurs.

9.0.4. GMII Signals

Table 9–5 shows the GMII signals. These signals are applicable only if you enable 1G/10GbE MAC or multi-speed 10M-10GbE MAC. For 1 Gbps, 10 Mbps, and 100 Mbps mode, the MAC uses the `gmii_tx_clk` and `gmii_rx_clk` from the PHY IP.

Table 9–5. GMII Signals

Signal	Direction	Width	Description
`gmii_rx_clk_clk`	Input	–	125-MHz receive clock. Provides the timing reference for the GMII receive interface.
`gmii_rx_d[]`	Input	8	The GMII receive data bus
`gmii_rx_dv`	Input	1	This signal indicates that the RX data is valid.
`gmii_rx_err`	Input	1	The PHY asserts this signal to indicate that the current frame contains error.
`gmii_tx_clk_clk`	Input	–	125-MHz transmit clock. Provides the timing reference for the GMII transmit interface.
`gmii_tx_d[]`	Output	8	The GMII transmit data bus.
`gmii_tx_en`	Output	1	This signal indicates that the TX data is valid.
`gmii_tx_err`	Output	1	This signal is asserted to indicate to the PHY that the transmitted frame is invalid.

9.0.5. MII Signals

Table 9–6 shows the MII signals. These signals are applicable only if you enable multi-speed 10M-10GbE MAC. For 10 Mbps and 100 Mbps modes, the MAC uses the `gmii_tx_clk` and `gmii_rx_clk` from the PHY IP.

Table 9–6. MII Signals

Signal	Direction	Width	Description
`mii_rx_d[]`	Input	4	The MII receive data bus
`mii_rx_dv`	Input	1	This signal indicates that the RX data is valid.
`mii_rx_err`	Input	1	The PHY asserts this signal to indicate that the current frame contains error.
`rx_clkena`	Input	1	The RX clock enable provided by the PHY IP to the MAC. This clock divides `gmii_rx_clk_clk` down to 25 MHz for 100 Mbps mode and 2.5 MHz for 10 Mbps mode.
`rx_clkena_half_rate`	Input	1	The RX half-clock enable provided by the PHY IP to the MAC. This clock divides `gmii_rx_clk_clk` down to 12.5 MHz for 100 Mbps mode and 1.25 MHz for 10 Mbps mode.
`mii_tx_d[]`	Output	4	The MII transmit data bus.
`mii_tx_en`	Output	1	This signal indicates that the TX data is valid.
`mii_tx_err`	Output	1	This signal is asserted to indicate to the PHY that the transmitted frame is invalid.

Table 9–6. MII Signals

Signal	Direction	Width	Description
tx_clkena	Input	1	The TX clock enable provided by the PHY IP to the MAC. This clock divides gmii_tx_clk_clk down to 25 MHz for 100 Mbps mode and 2.5 MHz for 10 Mbps mode.
tx_clkena_half_rate	Input	1	The TX half-clock enable provided by the PHY IP to the MAC. This clock divides gmii_tx_clk_clk down to 12.5 MHz for 100 Mbps mode and 1.25 MHz for 10 Mbps mode.

9.0.6. Unidirectional Signals

Table 9–8 describes the unidirectional signals. These signals are present only when you turn on the **Enable unidirectional mode** option.

Table 9–7. Unidirectional Signals

Signal	Direction	Width	Description
unidirectional_en	Output	1	When asserted, this signal indicates the state of tx_unidir_control register bit 0.
unidirectional_remote_fault_dis	Output	1	When asserted, this signal indicates the state of tx_unidir_control register bit 1.

9.0.7. Avalon-MM Programming Interface Signals

Table 9–8 describes the Avalon-MM programming interface signals.

Table 9–8. Avalon-MM CSR Interface Signals

Signal	Direction	Width	Description
csr_address[]	Input	13	Use this bus to specify the register address you want to read from or write to.
csr_read	Input	1	Assert this signal to request a read.
csr_readdata[]	Output	32	Carries the data read from the specified register.
csr_write	Input	1	Assert this signal to request a write.
csr_writedata[]	Input	32	Carries the data to be written to the specified register.
csr_waitrequest	Output	1	When asserted, this signal indicates that the IP core is busy and not ready to accept any read or write requests. ■ During read operations, the csr_readdata[] is not valid until csr_waitrequest is deasserted. ■ During write operations, the data in csr_writedata[] is not written until csr_waitrequest is deasserted.

9.0.8. Avalon-ST Status and Pause Interface Signals

Table 9–9 describes the Avalon-ST status signals.



Use the Avalon-ST status interface to obtain information and error status on receive frames only when the option to remove CRC and/or padding is disabled and no overflow occurs. When CRC and/or padding removal is enabled or when an overflow occurs (`avalon_st_rx_ready` is deasserted), obtain the same information using the statistics counters.

Table 9–9. Avalon-ST Status Interface Signals (Part 1 of 5)

Signal	Direction	Width	Description
`avalon_st_rxstatus_valid`	Output	1	When asserted, this signal indicates that `avalon_st_rxstatus_data[]` contains valid information about the receive frame. The IP core asserts this signal in the same clock cycle it receives the end of packet (`avalon_st_rx_endofpacket` is asserted).
`avalon_st_rxstatus_data[]`	Output	40	Contains information about the receive frame: ■ Bits 0 to 15: Payload length. ■ Bits 16 to 31: Packet length. ■ Bit 32: When set to 1, indicates a stacked VLAN frame. ■ Bit 33: When set to 1, indicates a VLAN frame. ■ Bit 34: When set to 1, indicates a control frame. ■ Bit 35: When set to 1, indicates a pause frame. ■ Bit 36: When set to 1, indicates a broadcast frame. ■ Bit 37: When set to 1, indicates a multicast frame. ■ Bit 38: When set to 1, indicates a unicast frame. ■ Bit 39: When set to 1, indicates a PFC frame. The IP core presents the valid information on this bus in the same clock cycle it asserts `avalon_st_rxstatus_valid`. The information on this data bus is invalid when an overflow occurs or when CRC and/or padding removal is enabled.

Table 9–9. Avalon-ST Status Interface Signals (Part 2 of 5)

Signal	Direction	Width	Description
avalon_st_rxstatus_error[]	Output	7	When set to 1, each bit of this signal indicates an error type in the receive frame. ■ Bit 0: Undersized frame. ■ Bit 1: Oversized frame. ■ Bit 2: Payload length error. ■ Bit 3: CRC error. ■ Bit 4: Unused. ■ Bit 5: Unused. ■ Bit 6: PHY error. The IP core presents the error status on this bus in the same clock cycle it asserts avalon_st_rxstatus_valid. The error status is invalid when an overflow occurs.
avalon_st_txstatus_valid	Output	1	When asserted, this signal indicates that avalon_st_txstatus_data[] contains valid information about the transmit frame.
avalon_st_txstatus_data[]	Output	40	Contains information about the transmit frame: ■ Bits 0 to 15: Payload length. ■ Bits 16 to 31: Packet length. ■ Bit 32: When set to 1, indicates a stacked VLAN frame. ■ Bit 33: When set to 1, indicates a VLAN frame. ■ Bit 34: When set to 1, indicates a control frame. ■ Bit 35: When set to 1, indicates a pause frame. ■ Bit 36: When set to 1, indicates a broadcast frame. ■ Bit 37: When set to 1, indicates a multicast frame. ■ Bit 38: When set to 1, indicates a unicast frame. ■ Bit 39: When set to 1, indicates a PFC frame. The IP core asserts the valid information on this bus in the same clock cycle it asserts avalon_st_txstatus_valid. The information on this data bus is invalid when an underflow occurs or when CRC and/or padding insertion is enabled.

Table 9–9. Avalon-ST Status Interface Signals (Part 3 of 5)

Signal	Direction	Width	Description
avalon_st_txstatus_error[]	Output	7	When set to 1, each bit of this signal indicates an error type in the transmit frame. ■ Bit 0: Undersized frame. ■ Bit 1: Oversized frame. ■ Bit 2: Payload length error. ■ Bit 3: Unused. ■ Bit 4: Underflow. ■ Bit 5: Client error. ■ Bit 6: Unused. The IP core presents the error status on this bus in the same clock cycle it asserts avalon_st_txstatus_valid. The error status is invalid when an underflow occurs or when CRC and/or padding insertion is enabled.
avalon_st_tx_pfc_status_valid *(1)*	Output	1	When asserted, this signal qualifies the data on the avalon_st_tx_pfc_status_data bus.

Table 9–9. Avalon-ST Status Interface Signals (Part 4 of 5)

Signal	Direction	Width	Description
avalon_st_tx_pfc_status_data[] *(1)*	Output	*n*	The signal width is determined by the **Number of PFC priorities** parameter, *n* = 2 x number priority queues enabled. ■ Bit 0: When asserted, this bit indicates that an XON request is transmitted for priority queue 0. ■ Bit 1: When asserted, this bit indicates that an XOFF request is transmitted for priority queue 0. ■ Bit 2: When asserted, this bit indicates that an XON request is transmitted for priority queue 1. ■ Bit 3: When asserted, this bit indicates that an XOFF request is transmitted for priority queue 1. ■ Bit 4:When asserted, this bit indicates that an XON request is transmitted for priority queue 2. ■ Bit 5: When asserted, this bit indicates that an XOFF request is transmitted for priority queue 2. ■ Bit 6: When asserted, this bit indicates that an XON request is transmitted for priority queue 3. ■ Bit 7: When asserted, this bit indicates that an XOFF request is transmitted for priority queue 3. ■ Bit 8: When asserted, this bit indicates that an XON request is transmitted for priority queue 4. ■ Bit 9: When asserted, this bit indicates that an XOFF request is transmitted for priority queue 4. ■ Bit 10: When asserted, this bit indicates that an XON request is transmitted for priority queue 5. ■ Bit 11: When asserted, this bit indicates that an XOFF request is transmitted for priority queue 5. ■ Bit 12: When asserted, this bit indicates that an XON request is transmitted for priority queue 6. ■ Bit 13: When asserted, this bit indicates that an XOFF request is transmitted for priority queue 6. ■ Bit 14: When asserted, this bit indicates that an XON request is transmitted for priority queue 7. ■ Bit 15: When asserted, this bit indicates that an XOFF request is transmitted for priority queue 7.
avalon_st_rx_pfc_status_valid *(1)*	Output	1	When asserted, this signal qualifies the data on the avalon_st_rx_pfc_status_data bus.

Table 9–9. Avalon-ST Status Interface Signals (Part 5 of 5)

Signal	Direction	Width	Description
avalon_st_rx_pfc_status_data[] *(1)*	Output	*n*	The signal width is determined by the **Number of PFC priorities** parameter, *n* = 2 x number priority queues enabled. ■ Bit 0: When asserted, this bit indicates that an XON request is received for priority queue 0. ■ Bit 1: When asserted, this bit indicates that an XOFF request is received for priority queue 0. ■ Bit 2: When asserted, this bit indicates that an XON request is received for priority queue 1. ■ Bit 3: When asserted, this bit indicates that an XOFF request is received for priority queue 1. ■ Bit 4:When asserted, this bit indicates that an XON request is received for priority queue 2. ■ Bit 5: When asserted, this bit indicates that an XOFF request is received for priority queue 2. ■ Bit 6: When asserted, this bit indicates that an XON request is received for priority queue 3. ■ Bit 7: When asserted, this bit indicates that an XOFF request is received for priority queue 3. ■ Bit 8: When asserted, this bit indicates that an XON request is received for priority queue 4. ■ Bit 9: When asserted, this bit indicates that an XOFF request is received for priority queue 4. ■ Bit 10: When asserted, this bit indicates that an XON request is received for priority queue 5. ■ Bit 11: When asserted, this bit indicates that an XOFF request is received for priority queue 5. ■ Bit 12: When asserted, this bit indicates that an XON request is received for priority queue 6. ■ Bit 13: When asserted, this bit indicates that an XOFF request is received for priority queue 6. ■ Bit 14: When asserted, this bit indicates that an XON request is received for priority queue 7. ■ Bit 15: When asserted, this bit indicates that an XOFF request is received for priority queue 7.

Note to Table 9–9:

(1) The signal is included only when you turn on the **Priority-based flow control (PFC)** parameter.

Table 9–10 describes the Avalon-ST flow control signals.

Table 9–10. Avalon-ST Flow Control Signals (Part 1 of 3)

Signal	Direction	Width	Description
avalon_st_pause_data[]	Input	2	Assert this signal to generate pause frames: ■ Bit 0: Set to 1 to generate an XON pause frame. ■ Bit 1: Set to 1 to generate an XOFF pause frame. You can also use the tx_pauseframe_control register to generate pause frames. The register takes precedence over this signal.
avalon_st_rx_pfc_pause_data[] *(1)*	Output	2-8	The signal width is determined by the **Number of PFC priorities** parameter, *n* = number priority queues enabled. The MAC RX asserts bit *n* when the Pause Quanta *n* field in the PFC frame is valid (Pause Quanta Enable [*n*] = 1) and greater than 0. For each pause quanta unit, the MAC RX asserts bit *n* for eight clock cycle. The MAC RX deasserts bit *n* when the Pause Quanta *n* field in the PFC frame is valid (Pause Quanta Enable [*n*] = 1) and equal to 0. The MAC RX also deasserts this signal when the timer expires.

Table 9–10. Avalon-ST Flow Control Signals (Part 2 of 3)

Signal	Direction	Width	Description
avalon_st_tx_pfc_gen_data[] *(1)*	Input	4-16	The signal width is determined by the **Number of PFC priorities** parameter, *n* = 2 x number priority queues enabled. ■ Bit 0: Set this bit to 1 to trigger an XON request for priority queue 0. ■ Bit 1: Set this bit to 1 to trigger an XOFF request for priority queue 0. ■ Bit 2: Set this bit to 1 to trigger an XON request for priority queue 1. ■ Bit 3: Set this bit to 1 to trigger an XOFF request for priority queue 1. ■ Bit 4:Set this bit to 1 to trigger an XON request for priority queue 2. ■ Bit 5: Set this bit to 1 to trigger an XOFF request for priority queue 2. ■ Bit 6: Set this bit to 1 to trigger an XON request for priority queue 3. ■ Bit 7: Set this bit to 1 to trigger an XOFF request for priority queue 3. ■ Bit 8: Set this bit to 1 to trigger an XON request for priority queue 4. ■ Bit 9: Set this bit to 1 to trigger an XOFF request for priority queue 4. ■ Bit 10: Set this bit to 1 to trigger an XON request for priority queue 5. ■ Bit 11: Set this bit to 1 to trigger an XOFF request for priority queue 5. ■ Bit 12: Set this bit to 1 to trigger an XON request for priority queue 6. ■ Bit 13: Set this bit to 1 to trigger an XOFF request for priority queue 6. ■ Bit 14: Set this bit to 1 to trigger an XON request for priority queue 7. ■ Bit 15: Set this bit to 1 to trigger an XOFF request for priority queue 7. If you simultaneously assert both bits corresponding to priority queue *n*, neither the XOFF request nor the XON request is generated.
avalon_st_tx_pause_length_data[]	Input	16	This signal is present only in the MAX TX only variation. Specifies the pause duration when a pause frame is received on the TX path. The pause length is in unit of pause quanta, where 1 pause length = 512 bits time.
avalon_st_tx_pause_length_valid	Input	1	This signal is present only in the MAX TX only variation. When asserted, this signal qualifies the data on the avalon_st_tx_pause_length_data bus.

Table 9–10. Avalon-ST Flow Control Signals (Part 3 of 3)

Signal	Direction	Width	Description
avalon_st_rx_pause_length_data[]	Output	16	This signal is present only in the MAX RX only variation. Specifies the pause duration when a pause frame is sent to the TX path. The pause length is in unit of pause quanta, where 1 pause length = 512 bits time.
avalon_st_rx_pause_length_valid	Output	1	This signal is present only in the MAX RX only variation. When asserted, this signal qualifies the data on the avalon_st_rx_pause_length_data bus.

Note to Table 9–10:

(1) The signal is present only when you turn on the **Priority-based flow control (PFC)** parameter.

9.0.9. 10M-10GbE MAC Speed Control Signal

The speed_sel signal is the input status signal from the PHY that determines the speed for the MAC. The signal indicates the following speeds:

- 0 = 10 Gbps
- 1 = 1 Gps
- 2 = 100 Mbps
- 3 = 10 Mbps

9.0.10. IEEE 1588v2 Interface Signals

9.0.10.1. IEEE 1588v2 Timestamp Interface Signals

Table 9–11 describes the RX ingress timestamp interface signals for the IEEE 1588v2 feature.

Table 9–11. IEEE 1588v2 RX Ingress Timestamp Interface Signals (Part 1 of 2)

Signal	Direction	Width	Description
rx_ingress_timestamp_96b_data	Output	96	Carries the ingress timestamp on the receive datapath. Consists of 48-bit seconds field, 32-bit nanoseconds field, and 16-bit fractional nanoseconds field. The MAC presents the timestamp for all receive frames and asserts this signal in the same clock cycle it asserts rx_ingress_timestamp_96b_valid.
rx_ingress_timestamp_96b_valid	Output	1	When asserted, this signal indicates that rx_ingress_timestamp_96b_data contains valid timestamp. For all receive frame, the MAC asserts this signal in the same clock cycle it receives the start of packet (avalon_st_rx_startofpacket is asserted).

Table 9–11. IEEE 1588v2 RX Ingress Timestamp Interface Signals (Part 2 of 2)

Signal	Direction	Width	Description
rx_ingress_timestamp_64b_data	Output	64	Carries the ingress timestamp on the receive datapath. Consists of 48-bit nanoseconds field and 16-bit fractional nanoseconds field. The MAC presents the timestamp for all receive frames and asserts this signal in the same clock cycle it asserts rx_ingress_timestamp_64b_valid.
rx_ingress_timestamp_64b_valid	Output	1	When asserted, this signal indicates that rx_ingress_timestamp_64b_data contains valid timestamp. For all receive frame, the MAC asserts this signal in the same clock cycle it receives the start of packet (avalon_st_rx_startofpacket is asserted).

Table 9–12 describes the TX egress timestamp interface signals for the IEEE 1588v2 feature.

Table 9–12. IEEE 1588v2 TX Egress Timestamp Interface Signals (Part 1 of 2)

Signal	Direction	Width	Description
tx_egress_timestamp_request_valid	Input	1	Assert this signal when a user-defined tx_egress_timestamp is required for a transmit frame. Assert this signal in the same clock cycle as the start of packet (avalon_st_tx_startofpacket is asserted).
tx_egress_timestamp_request_fingerprint	Input	1-16	Use this bus to specify fingerprint for the user-defined tx_egress_timestamp. The fingerprint is used to identify the user-defined timestamp. The signal width is determined by the **TSTAMP_FP_WIDTH** parameter. The value of this signal is mapped to user_fingerprint. This signal is only valid when you assert tx_egress_timestamp_request_valid.
tx_egress_timestamp_96b_data	Output	96	A transmit interface signal. This signal requests timestamp of frames on the TX path. The timestamp is used to calculate the residence time. Consists of 48-bit seconds field, 32-bit nanoseconds field, and 16-bit fractional nanoseconds field.

Table 9–12. IEEE 1588v2 TX Egress Timestamp Interface Signals (Part 2 of 2)

Signal	Direction	Width	Description
tx_egress_timestamp_96b_valid	Output	1	A transmit interface signal. Assert this signal to indicate that a timestamp is obtained and a timestamp request is valid for the particular frame. Assert this signal in the same clock cycle as the start of packet (avalon_st_tx_startofpacket is asserted).
tx_egress_timestamp_96b_fingerprint	Output	1–16	Configurable width fingerprint that returns with correlated timestamps. The signal width is determined by the **TSTAMP_FP_WIDTH** parameter.
tx_egress_timestamp_64b_data	Output	64	A transmit interface signal. This signal requests timestamp of frames on the TX path. The timestamp is used to calculate the residence time. Consists of 48-bit nanoseconds field and 16-bit fractional nanoseconds field.
tx_egress_timestamp_64b_valid	Output	1	A transmit interface signal. Assert this signal to indicate that a timestamp is obtained and a timestamp request is valid for the particular frame. Assert this signal in the same clock cycle as the start of packet (avalon_st_tx_startofpacket or avalon_st_tx_startofpacket_n is asserted).
tx_egress_timestamp_64b_fingerprint	Output	1–16	Configurable width fingerprint that returns with correlated timestamps. The signal width is determined by the **TSTAMP_FP_WIDTH** parameter.

Table 9–13 describes the TX insert control timestamp interface signals for the IEEE 1588v2 feature.

Table 9–13. IEEE 1588v2 TX Insert Control Timestamp Interface Signals (Part 1 of 2)

Signal	Direction	Width	Description
tx_etstamp_ins_ctrl_timestamp_insert	Input	1	Assert this signal to insert egress timestamp into the associated frame. Assert this signal in the same clock cycle as the start of packet (avalon_st_tx_startofpacket is asserted).
tx_etstamp_ins_ctrl_timestamp_format	Input	1	Timestamp format of the frame, which the timestamp to be inserted. 0: 1588v2 format (48-bits second field + 32-bits nanosecond field + 16-bits correction field for fractional nanosecond) Required offset location of timestamp and correction field. 1: 1588v1 format (32-bits second field + 32-bits nanosecond field) Required offset location of timestamp. Assert this signal in the same clock cycle as the start of packet (avalon_st_tx_startofpacket is asserted).
tx_etstamp_ins_ctrl_residence_time_update	Input	1	Assert this signal to add residence time (egress timestamp –ingress timestamp) into correction field of PTP frame. Required offset location of correction field. Assert this signal in the same clock cycle as the start of packet (avalon_st_tx_startofpacket is asserted).
tx_etstamp_ins_ctrl_ingress_timestamp_96b []	Input	96	96-bit format of ingress timestamp. (48 bits second + 32 bits nanosecond + 16 bits fractional nanosecond). Assert this signal in the same clock cycle as the start of packet (avalon_st_tx_startofpacket is asserted).
tx_etstamp_ins_ctrl_ingress_timestamp_64b []	Input	64	64-bit format of ingress timestamp. (48-bits nanosecond + 16-bits fractional nanosecond). Assert this signal in the same clock cycle as the start of packet (avalon_st_tx_startofpacket is asserted).

Table 9–13. IEEE 1588v2 TX Insert Control Timestamp Interface Signals (Part 2 of 2)

Signal	Direction	Width	Description
tx_etstamp_ins_ctrl_residence_time_calc_format	Input	1	Format of timestamp to be used for residence time calculation. 0: 96-bits (96-bits egress timestamp - 96-bits ingress timestamp). 1: 64-bits (64-bits egress timestamp - 64-bits ingress timestamp). Assert this signal in the same clock cycle as the start of packet (avalon_st_tx_startofpacket is asserted).
tx_etstamp_ins_ctrl_checksum_zero	Input	1	Assert this signal to set the checksum field of UDP/IPv4 to zero. Required offset location of checksum field. Assert this signal in the same clock cycle as the start of packet (avalon_st_tx_startofpacket is asserted).
tx_etstamp_ins_ctrl_checksum_correct	Input	1	Assert this signal to correct UDP/IPv6 packet checksum, by updating the checksum correction, which is specified by checksum correction offset. Required offset location of checksum correction. Assert this signal in the same clock cycle as the start of packet (avalon_st_tx_startofpacket is asserted).
tx_etstamp_ins_ctrl_offset_timestamp []	Input	16	The location of the timestamp field, relative to the first byte of the packet. Assert this signal in the same clock cycle as the start of packet (avalon_st_tx_startofpacket is asserted).
tx_etstamp_ins_ctrl_offset_correction_field []	Input	16	The location of the correction field, relative to the first byte of the packet. Assert this signal in the same clock cycle as the start of packet (avalon_st_tx_startofpacket is asserted).
tx_etstamp_ins_ctrl_offset_checksum_field []	Input	16	The location of the checksum field, relative to the first byte of the packet. Assert this signal in the same clock cycle as the start of packet (avalon_st_tx_startofpacket is asserted).
tx_etstamp_ins_ctrl_offset_checksum_correction []	Input	16	The location of the checksum correction field, relative to the first byte of the packet. Assert this signal in the same clock cycle as the start of packet (avalon_st_tx_startofpacket is asserted).

9.0.10.2. ToD Clock Interface Signals

Table 9–14 describes the ToD clock interface signals for the IEEE 1588v2 feature.

Table 9–14. ToD Clock Interface Signals

Signal	Direction	Width	Description
tx_time_of_day_96b_10g_data (in 10 Gbps mode) tx_time_of_day_96b_1g_data (in 1 Gbps, 10 Mbps, and 100 Mbps mode)	Input	96	Use this bus to carry the time-of-day from external ToD module to 96-bit MAC TX clock. Consists of 48-bit seconds field, 32-bit nanoseconds field, and 16-bit fractional nanoseconds field
rx_time_of_day_96b_10g_data (in 10 Gbps mode) rx_time_of_day_96b_1g_data (in 1 Gbps, 10 Mbps, and 100 Mbps mode)	Input	96	Use this bus to carry the time-of-day from external ToD module to 96-bit MAC RX clock. Consists of 48-bit seconds field, 32-bit nanoseconds field, and 16-bit fractional nanoseconds field
tx_time_of_day_64b_10g_data (for 10 Gbps mode) tx_time_of_day_64b_1g_data (in 1 Gbps, 10 Mbps, and 100 Mbps mode)	Input	64	Use this bus to carry the time-of-day from ToD clock to 64-bit MAC TX clock. Consists of 48-bit nanoseconds field and 16-bit fractional nanoseconds field
rx_time_of_day_64b_10g_data (in 10 Gbps mode) rx_time_of_day_64b_1g_data (in 1 Gbps, 10 Mbps, and 100 Mbps mode)	Input	64	Use this bus to carry the time-of-day from external ToD module to 64-bit MAC RX clock. Consists of 48-bit nanoseconds field and 16-bit fractional nanoseconds field

9.0.10.3. Path Delay Interface Signals

Table 9–15 describes the path delay interface signals for the IEEE 1588v2 feature.

Table 9–15. Path Delay Interface Signals

Signal	Direction	Width	Description
tx_path_delay_10g_data (in 10 Gbps mode)	Input	16	Connect this bus to the Altera PHY IP. This bus carries the path delay, which is measured between the physical network and the PHY side of the MAC IP Core (XGMII, GMII, or MII). The MAC IP core uses this value when generating the egress timestamp to account for the delay. The path delay is in the following format: ■ Bits 0 to 9: Fractional number of clock cycle ■ Bits 10 to 15: Number of clock cycle
tx_path_delay_1g_data (in 1 Gbps, 10 Mbps, and 100 Mbps mode)	Input	22	Connect this bus to the Altera PHY IP. This bus carries the path delay, which is measured between the physical network and the PHY side of the MAC IP Core (XGMII, GMII, or MII). The MAC IP core uses this value when generating the egress timestamp to account for the delay. The path delay is in the following format: Consists of: ■ Bits 0 to 9: Fractional number of clock cycle ■ Bits 10 to 21: Number of clock cycle

Table 9–15. Path Delay Interface Signals

Signal	Direction	Width	Description
rx_path_delay_10g_data (in 10 Gbps mode)	Input	16	Connect this bus to the Altera PHY IP. This bus carries the path delay (residence time), measured between the physical network and the PHY side of the MAC IP Core (XGMII, GMII, or MII). The MAC IP core uses this value when generating the ingress timestamp to account for the delay. The path delay is in the following format: ■ Bits 0 to 9: Fractional number of clock cycle ■ Bits 10 to 15: Number of clock cycle
rx_path_delay_1g_data (in 1 Gbps, 10 Mbps, and 100 Mbps mode)	Input	22	Connect this bus to the Altera PHY IP. This bus carries the path delay (residence time), measured between the physical network and the PHY side of the MAC IP Core (XGMII, GMII, or MII). The MAC IP core uses this value when generating the ingress timestamp to account for the delay. The path delay is in the following format: ■ Bits 0 to 9: Fractional number of clock cycle ■ Bits 10 to 21: Number of clock cycle

9.0.10.4. Timing Diagrams—IEEE 1588v2 Timestamp

The following timing diagrams show the timestamp of frames observed on the TX path for the IEEE 1588v2 feature.

Figure 9–9 shows the TX timestamp signals for the IEEE 1588v2 feature in a one step operation.

Figure 9–9. Egress Timestamp Insert for IEEE 1588v2 PTP Packet Encapsulated in IEEE 802.3

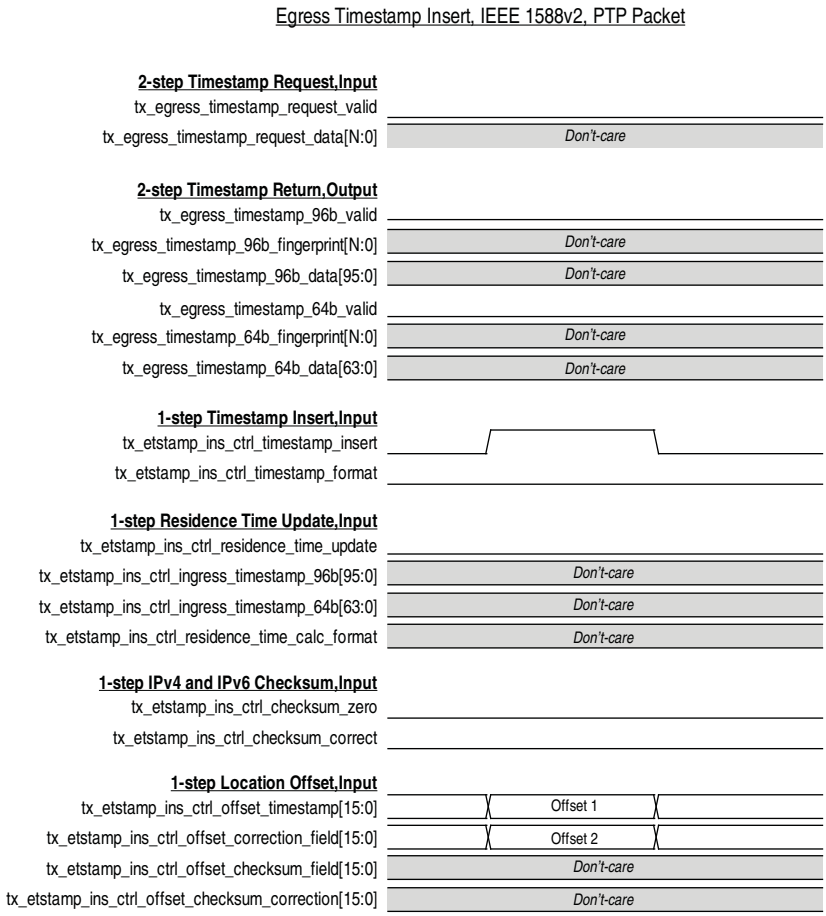

Figure 9–10 shows the TX timestamp signals for the first type of egress correction field update, where the residence time is calculated by subtracting 96 bit ingress timestamp from 96 bit egress timestamp. The result is updated in the correction field of the PTP frame encapsulated over UDP/IPv4.

Figure 9–10. Type 1 Egress Correction Field Update

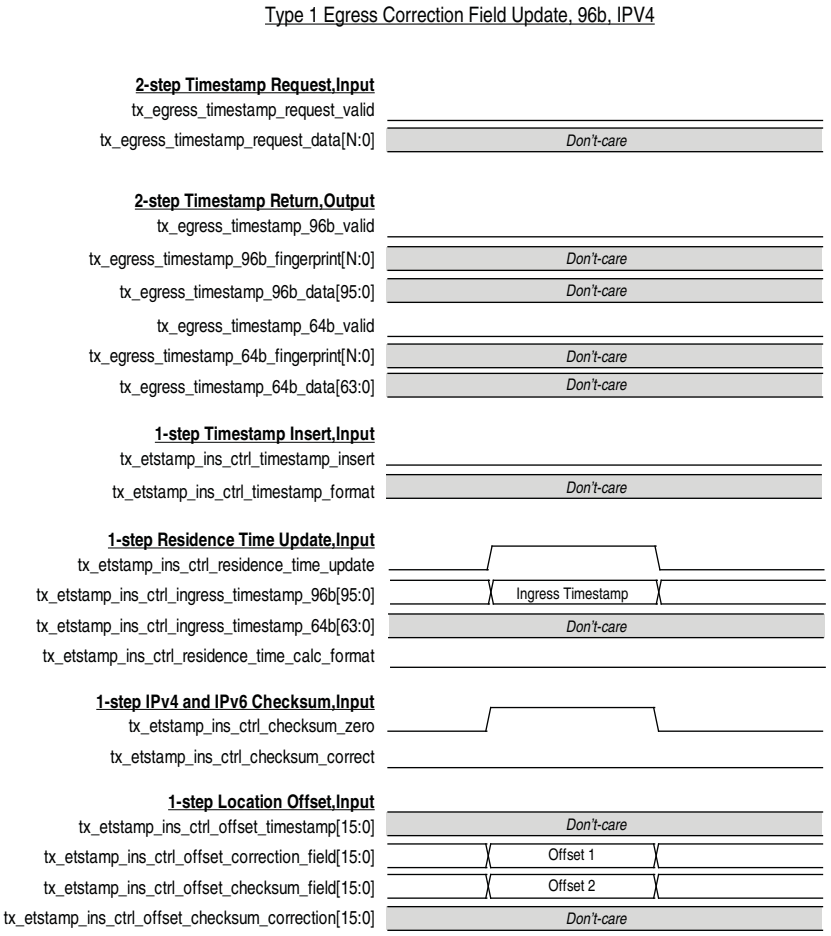

Figure 9–11 shows the TX timestamp signals for the second type of egress correction field update, where the 64 bit ingress timestamp has been pre-subtracted from the correction field at the ingress port. At the egress port, the 64 bit egress timestamp is added into the correction field and the correct residence time is updated in the correction field. This is the example of PTP frame encapsulated over UPD/IPV6.

Figure 9–11. Type 2 Egress Correction Field Update

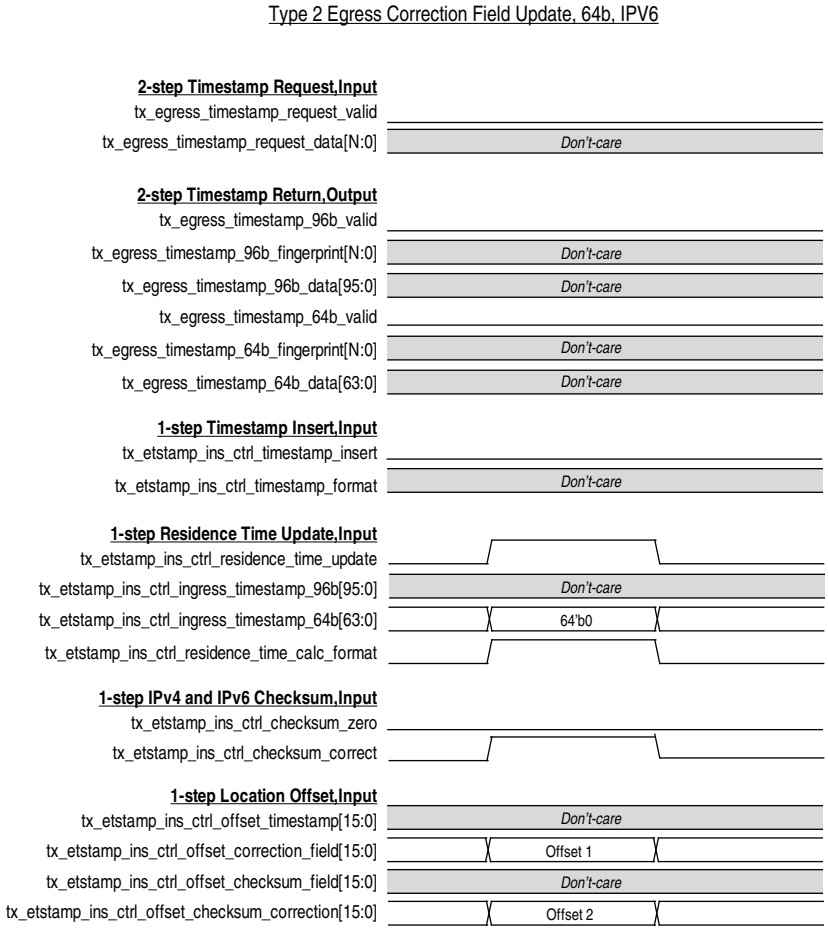

Figure 9–12 shows the TX timestamp signals for the IEEE 1588v2 feature in a two-step operation.

Figure 9–12. Egress Two-Step Operation

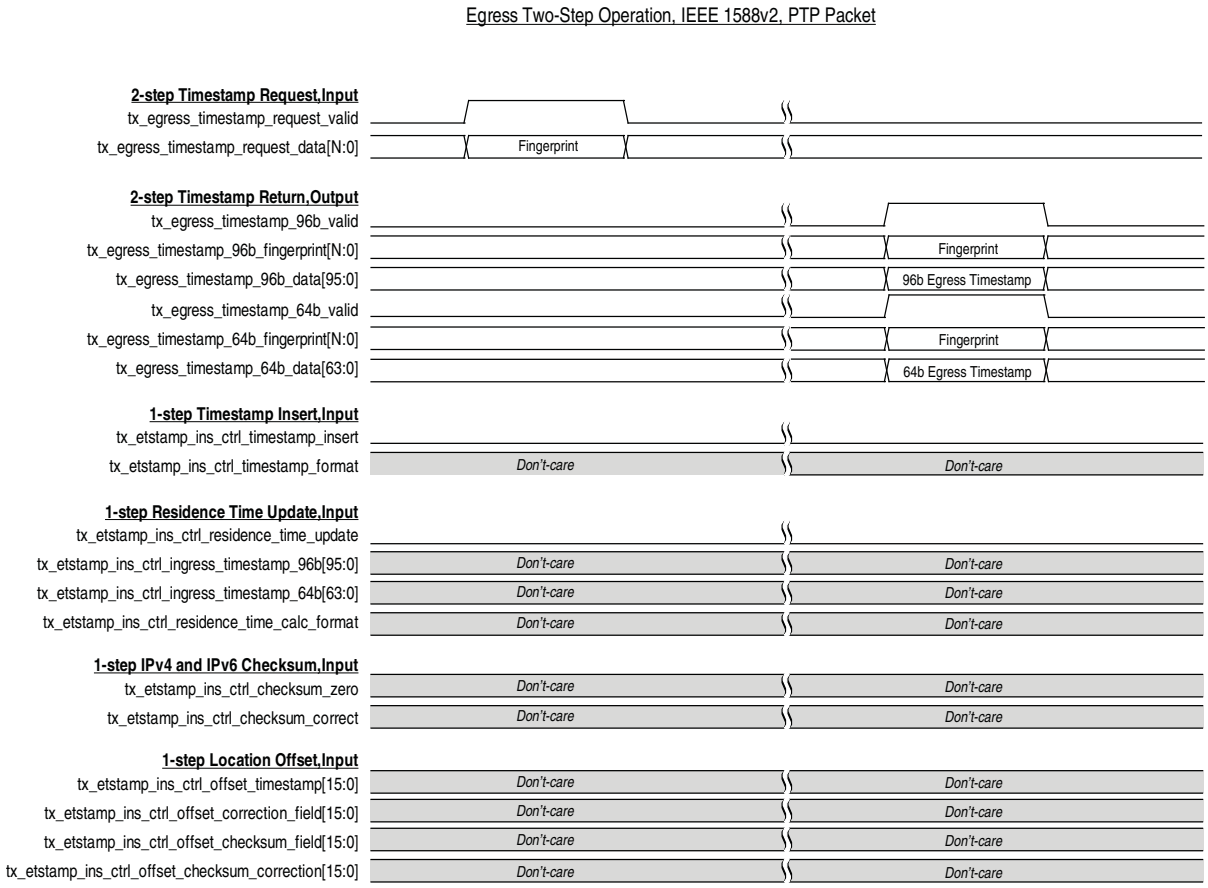

10.1. SDR XGMII to DDR XGMII Conversion

The MAC implements 64-bit SDR XGMII Tx and Rx interfaces with a frequency of 156.25 MHz. The XGMII as defined by IEEE 802.3-2005 standard is a 32-bit DDR interface with a frequency of 156.25 MHz.

If you want to use the MAC with a PHY IP core and connect it to an external device, convert the XGMII from 64-bit SDR (156.25 MHz) to 32-bit DDR (156.25 MHz) or vice versa by connecting the MAC to the Altera DDR I/O (ALTDDIO) megafunctions. The ALTDDIO megafunctions includes the following features:

- ALTDDIO_IN megafunction—Implements the Rx interface for DDR inputs to convert XGMII DDR to SDR frame format.
- ALTDDIO_OUT megafunction—Implements the Tx interface for DDR outputs to convert XGMII SDR to DDR frame format.

10.1.1. ALTDDIO_IN Megafunction Configuration

Use the MegaWizard Plug-in Manager to instantiate the ALTDDIO_IN megafunction and specify the initial parameters. Set the data bus width to 36 bits and apply the following signal connections:

- `xgmii_sdr[35:0]` to `dataout_l[35:0]`
- `xgmii_sdr[71:36]` to `dataout_h[35:0]`

10.1.2. ALTDDIO_OUT Megafunction Configuration

Use the MegaWizard Plug-in Manager to instantiate the ALTDDIO_OUT megafunction and specify the initial parameters. Set the data bus width to 36 bits and apply the following signal connections:

- `xgmii_sdr[35:0]` to `datain_l[35:0]`
- `xgmii_sdr[71:36]` to `datain_h[35:0]`

For more information about the ALTDDIO megafunction ports and parameters, refer to the *ALTDDIO Megafunction User Guide*.

10.2. 10GbE MAC and PHY Connection with XGMII

The XGMII is defined by the IEEE802.3 standard. XGMII is the standard interface between the MAC and PHY in the 10G Ethernet solution. Altera 10G MAC and PHY connect easily using the SDR XGMII interface.

Figure 10–1 shows an example of an SDR XGMII connection between the 10G MAC and PHY IP.

Figure 10–1. 10G MAC and PHY Connection with XGMII Interface

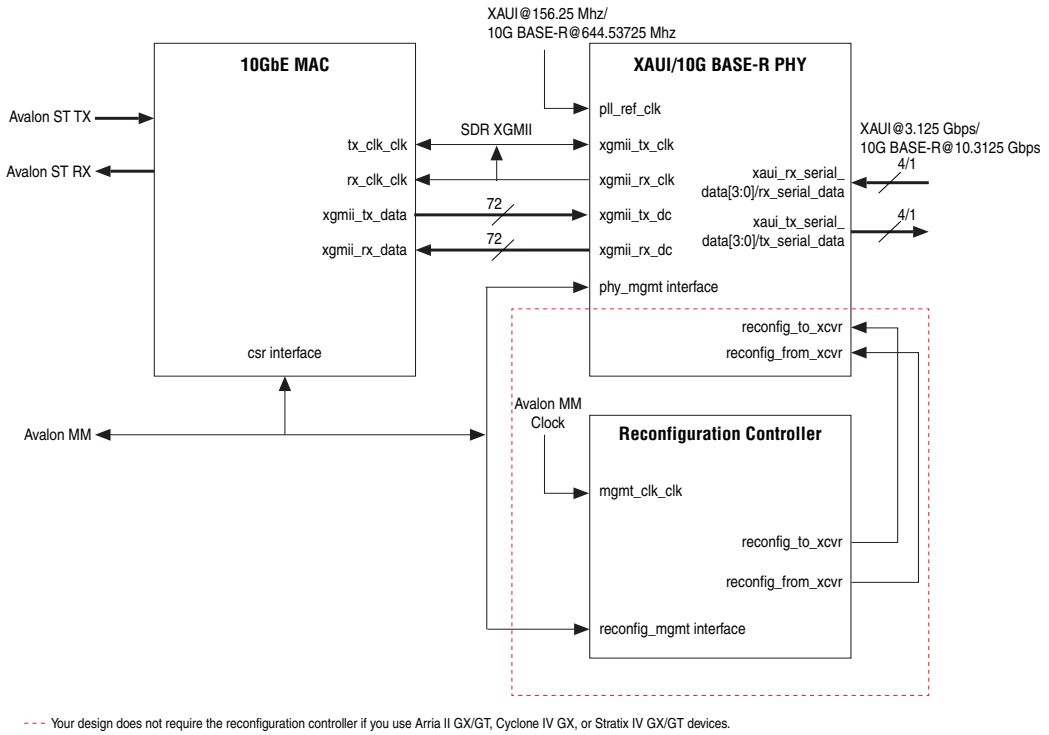

10.3. Sharing TX and RX Clocks for Multi-Port System Design

In a multi-port system design, you may need to share the MAC TX and RX clock for 1G and 10G with all ports. In such cases, your design requires only one ToD for each clock domains. The ToD Sync module will synchronize between the 1G and 10G MAC depending on which you select as the master ToD.

If the ports do not share the clocks, each clock domain in every port will require a dedicated ToD that is synchronized to the master ToD.

10.4. Sharing Reference Clocks for Multi-Port System Design

For multi-port system design, if every port is using the same reference clock source, the FPLL in every port is merged into a single FPLL. Similarly, the TXPLL for every channel is merged into a single TXPLL.

If the reference clock source for every port is different, then the merging will not occur.

A.1. Ethernet Frame

Figure A–1 shows the Ethernet frame format.

Figure A–1. Ethernet Frame Format

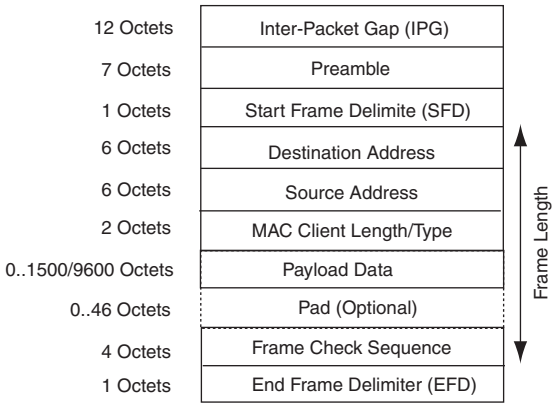

The Ethernet frame comprises the following fields:

- Inter-packet gap (IPG)—an average inter-frame length of 12 octets and is represented with the Idle control character which consists of data value 0x07.
- Preamble—inserted by the MAC or the client. MAC-inserted preamble is a maximum of 7 octets of data with value 0x55.
- Start frame delimiter (SFD)—a 1-octet fixed value of 0xD5 which marks the beginning of a frame.
- Destination and source addresses—6 octets each. The least significant byte is transmitted first.
- Length or type—a 2-octet value equal to or greater than 1536 (0x600) indicates a type field. Otherwise, this field contains the length of the payload data. The most significant byte of this field is transmitted first.
- Payload Data and Pad—variable length data and padding.
- Frame check sequence (FCS)—a 4-octet cyclic redundancy check (CRC) value for detecting frame errors during transmission.
- End frame delimiter (EFD)—a 1-octet fixed value of 0xFD which marks the end of a frame.

A.2. VLAN and Stacked VLAN Tagged MAC Frame

The extension of a basic frame is a VLAN tagged frame, which contains an additional VLAN tag field between the source address and length/type fields. VLAN tagging is defined by the IEEE 802.1Q standard. VLANs can identify and separate many groups' network traffic in enterprises and metro networks.VLAN tagged frames have a maximum length of 1522 bytes, excluding the preamble and the SFD bytes. In carrier Ethernet network applications based on IEEE 802.1ad provider bridge standard (QinQ) for scaling the network, frames can be tagged with two consecutive VLAN tags (stacked VLAN). Stacked VLAN frames contain an additional 8-byte field between the source address and length/type fields.

Figure A–2 shows the VLAN frame format.

Figure A–2. VLAN Frame Format

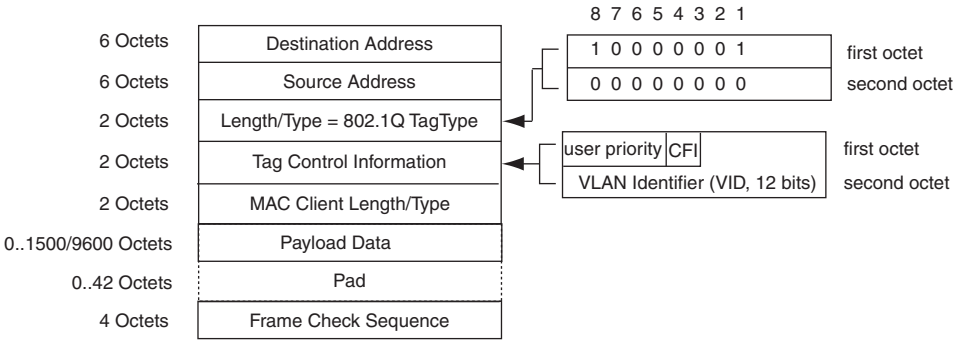

Figure A–3 shows the stacked VLAN frame format.

Figure A–3. Stacked VLAN Frame Format

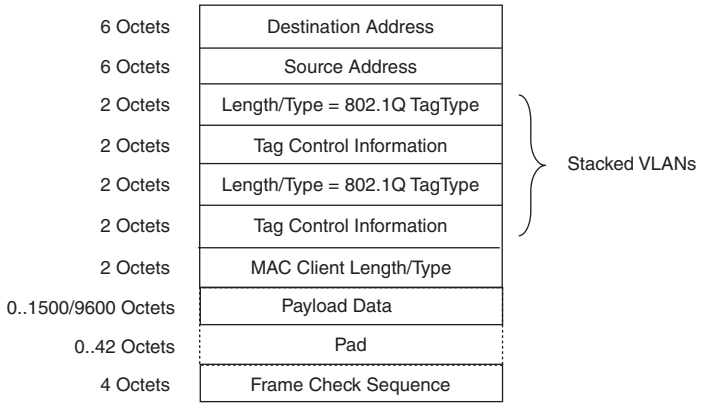

A.3. Pause Frame

Figure A–4 shows the format of pause frames.

Figure A–4. Pause Frame Format

1 Octet	Start[7:0]
6 Octets	Preamble[47:0]
1 Octet	SFD[7:0]
6 Octets	Destination Address[47:0] = 0x010000c28001
6 Octets	Source Address[47:0] = MAC Primary Address
2 Octets	Type[15:0] = 0x8808
2 Octets	Opcode[15:0] = 0x0001
2 Octets	Pause Quanta[15:0] = 0xP1, 0xP2 (XOFF: P1,P2 = tx_pauseframe_quanta; XON: P1, P2 = 0x0)
42 Octets	Reserved[335:0] = 0x0
4 Octets	Frame Check Sequence[31:0]

The length/type field has a fixed value of 0x8808, followed by a 2-byte opcode field of 0x0001. Subsequent two bytes define the pause quanta (P1 and P2); P1 is the most significant byte. For XOFF pause frames, the MAC sets the pause quanta field to the value of the `tx_pauseframe_quanta` register. For XON pause frames, the pause quanta is 0. One pause quanta fraction is equivalent to 512 bit times, which equates to 512/64 (the width of the MAC data bus), or 8 cycles for the system clock.

The MAC sets the destination address field to the global multicast address, 01-80-C2-00-00-01 (0x010000c28001) and the source address to the MAC primary address configured in the `tx_addrins_macaddr0` and `tx_addrins_madaddr1` registers. Pause frames have no payload length field, and is always padded with 42 bytes of 0x00.

A.4. Priority-Based Flow Control Frame

The PFC frame is an extension of the basic pause frame. It contains additional fields to enable priority queues and specify pause quanta for these queues. Figure A–5 shows the PFC frame format.

Figure A–5. PFC Frame Format

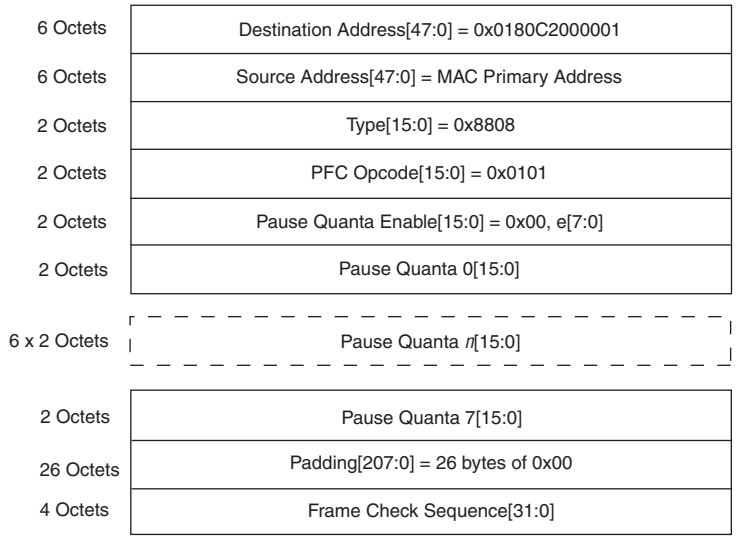

The following are the additional fields in the PFC frame:

- PFC Opcode—a 2-octet fixed value of 0x0101.
- Pause Quanta Enable[15:0]—indicates the validity of the pause quanta fields. The upper byte of this field is unused. Each bit in the lower byte represents a priority queue. If bit *n* is set to 1, it indicates that pause quanta *n* is valid and should be acted upon.
- Pause Quanta *n*[15:0]—the pause quanta for priority queue *n*.

B. Time-of-Day (ToD) Clock

The ToD clock provides a stream of timestamps for the IEEE 1588v2 feature.

B.1. Features

- Provides a stream of 96-bit timestamps. The timestamp has 48-bit second field, 32-bit nanosecond field, and 16-bit fractional nanosecond field.
- Runs at 156.25 MHz for the 10GbE MAC IP core.
- Supports coarse adjustment and fine adjustments through clean frequency adjustment.
- Supports period adjustment for frequency control using the `Period` register.
- Supports offset adjustment using the `AdjustPeriod` register.
- Automatically synchronizes to the master ToD clock through the ToD synchronization module when connected.
- Allows periodic correction if the ToD clock drifts from the actual time.

B.2. Device Family Support

Table B–1 shows the level of support offered by the ToD clock for each Altera device family.

Table B–1. Device Family Support

Device Family	Support
Arria V GX/GT/GZ/SOC	Preliminary
Cyclone V	Preliminary
Stratix IV GX/GT	Preliminary
Stratix V GX/GT	Preliminary
Other device families	No support

B.3. Performance and Resource Utilization

Table B–2 provides the estimated resource utilization and performance of the ToD clock for the Stratix V device family.

Table B–2. Stratix V Performance and Resource Utilization

MegaCore Function	Settings	FIFO Buffer Size (Bits)	Combinational ALUTs	Logic Registers	Memory (M20K Blocks/ MLAB Bits)
ToD Clock	Default	0	378	1,120	0/0

B.4. Parameter Setting

Table B–3 describes the ToD clock configuration parameters.

Table B–3. ToD Configuration Parameters

Name	Value	Description
DEFAULT_NSEC_PERIOD	Between 0 and 0x000F	4-bit value that defines the reset value for PERIOD_NS. The default value is 0x0006.
DEFAULT_FNSEC_PERIOD	Between 0 and 0xFFFF	16-bit value that defines the reset value for PERIOD_FNS. The default value is 0x6666.
DEFAULT_NSEC_ADJPERIOD	Between 0 and 0x000F	4-bit value that defines the reset value for ADJPERIOD_NS. The default value is 0x0006.
DEFAULT_FNSEC_ADJPERIOD	Between 0 and 0xFFFF	16-bit value that defines the reset value for ADJPERIOD_FNS. The default value is 0x6666.

B.5. ToD Clock Interface Signals

Figure B–1 shows the interface signals for the ToD clock.

Figure B–1. ToD Clock Interface Signals

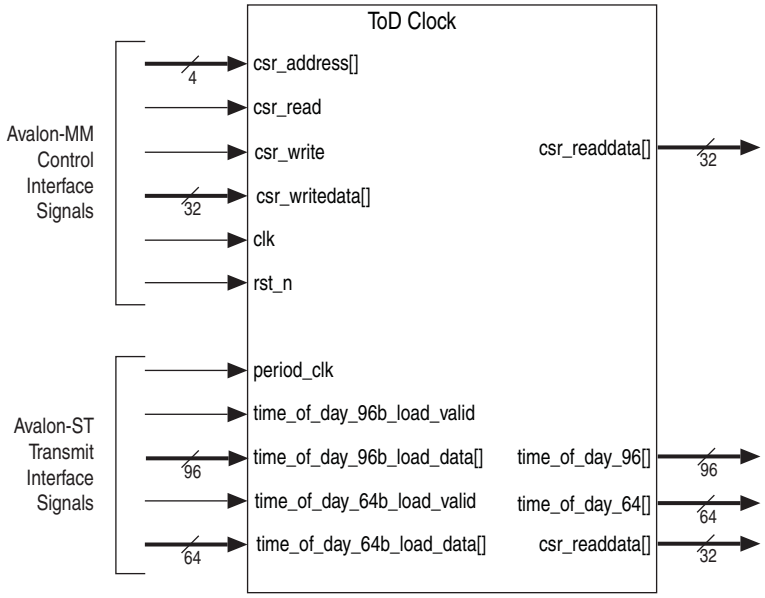

B.5.1. Avalon-MM Control Interface Signal

Table B–4 describes the Avalon-MM control interface signals for the ToD clock.

Table B–4. Avalon-MM Control Interface Signals for ToD Clock

Signal	Direction	Width	Description
csr_address[]	Input	2	Use this bus to specify the register address you want to read from or write to.
csr_read	Input	1	Assert this signal to request a read.
csr_readdata[]	Output	32	Carries the data read from the specified register.
csr_write	Input	1	Assert this signal to request a write.
csr_writedata[]	Input	32	Carries the data to be written to the specified register.
clk	Input	1	Register access reference clock.
rst_n	Input	1	Assert this signal to reset clk.

B.5.2. Avalon-ST Transmit Interface Signal

Table B–5 describes the Avalon-ST transmit interface signals for the ToD clock.

Table B–5. Avalon-ST Transmit Interface Signals for ToD Clock (Part 1 of 2)

Signal	Direction	Width	Description
time_of_day_96[]	Output	96	Timestamp from the ToD clock ■ Bits 0 to 15: 16-bit fractional nanosecond field ■ Bits 16 to 47: 32-bit nanosecond field ■ Bits 48 to 95: 48-bit second field
time_of_day_64[]	Output	64	Timestamp from the ToD clock ■ Bits 0 to 15: 16-bit fractional nanosecond field ■ Bits 16 to 63: 48-bit nanosecond field
time_of_day_96b_load_valid	Input	1	Indicates that the synchronized ToD is valid. Every time you assert this signal, the synchronized ToD is loaded into the ToD clock. Assert this signal for only one clock cycle.
time_of_day_96b_load_data[]	Input	96	Loads 96-bit synchronized ToD from master ToD clock to slave ToD clock within 1 clock cycle. ■ Bits 0 to 15: 16-bit fractional nanosecond field ■ Bits 16 to 63: 32-bit nanosecond field ■ Bits 64 to 95: 48-bit second field
time_of_day_64b_load_valid	Input	1	Indicates that the synchronized ToD is valid. Every time you assert this signal, the synchronized ToD is loaded into the ToD clock. Assert this signal for only one clock cycle.
time_of_day_64b_load_data[]	Input	64	Loads 64-bit synchronized ToD from master ToD clock to slave ToD clock within 1 clock cycle. ■ Bits 0 to 15: 16-bit fractional nanosecond field ■ Bits 16 to 63: 48-bit nanosecond field

Table B–5. Avalon-ST Transmit Interface Signals for ToD Clock (Part 2 of 2)

Signal	Direction	Width	Description
period_clk	Input	1	Clock for the ToD clock. The clock must be in the same clock domain as tx_time_of_day and rx_time_of_day in the MAC function. The 10GbE MAC should connect to ToD clock running at 156.25 MHz (from the xgmii_clk), while the 1GbE MAC should connect to ToD clock running at 125 MHz (from the PHY).
period_rst_n	Input	1	Assert this signal to reset period_clk to the same clock domain as tx_time_of_day and rx_time_of_day in the MAC function.

B.6. ToD Clock Configuration Register Space

Table B–6 describes the ToD clock register space.

Table B–6. ToD Clock Registers (Part 1 of 2)

Byte Offset	Name	R/W	Description	HW Reset
0x00	SecondsH	RW	■ Bits 0 to 15: High-order 16-bit second field. ■ Bits 16 to 31: Not used.	0x0
0x04	SecondsL	RW	Bits 0 to 32: Low-order 32-bit second field.	0x0
0x08	NanoSec	RW	Bits 0 to 32: 32-bit nanosecond field.	0x0
0x0C	Reserved	—	Reserved for future use	—
0x10	Period	RW	The period for the frequency adjustment. ■ Bits 0 to 15: Period in fractional nanosecond (PERIOD_FNS). ■ Bits 16 to 19: Period in nanosecond (PERIOD_NS). ■ Bits 20 to 31: Not used. The default value for the period depends on the f_{MAX} of the MAC function. For example, if f_{MAX} = 125-MHz, the period is 8-ns (PERIOD_NS = 0x0008 and PERIOD_FNS = 0x0000).	*n*
0x14	AdjustPeriod	RW	The period for the offset adjustment. ■ Bits 0 to 15: Period in fractional nanosecond (ADJPERIOD_FNS). ■ Bits 16 to 19: Period in nanosecond (ADJPERIOD_NS). ■ Bits 20 to 31: Not used.	0x0
0x18	AdjustCount	RW	■ Bits 0 to 19: The number of AdjustPeriod clock cycles used during offset adjustment. ■ Bits 20 to 31: Not used.	0x0

Table B–6. ToD Clock Registers (Part 2 of 2)

Byte Offset	Name	R/W	Description	HW Reset
0x1C	DriftAdjust	RW	The drift of ToD adjusted periodically by adding a correction value as configured in this register space. ■ Bits 0 to 15: Adjustment value in fractional nanosecond (DRIFT_ADJUST_FNS). This value is added into the current ToD during the adjustment. The default value is 0. ■ Bits 16 to 19: Adjustment value in nanosecond (DRIFT_ADJUST_NS). This value is added into the current ToD during the adjustment. The default value is 0. ■ Bits 20 to 32: Not used.	0x0
0x20	DriftAdjustRate	RW	The count of clock cycles for each ToD's drift adjustment to take effect. ■ Bits 0 to 15: The number of clock cycles (ADJUST_RATE). The ToD adjustment happens once after every period in number of clock cycles as indicated by this register space. ■ Bits 16 to 32: Not used.	0x0

B.6.1. Adjusting ToD Drift

You can use the DriftAdjust and DriftAdjustRate registers to correct any drift in the ToD clock.

For example, in the case of a ToD for 10G with period of 6.4ns, the nanosecond field is converted directly to PERIOD_NS while the fractional nanosecond need to be multiplied with 2^{16} or 65536 in order to convert to PERIOD_FNS. This results in 0x6 PERIOD_NS and 0x6666.4 PERIOD_FNS.

PERIOD_NS only accepts 0x6666 and ignores 0x0000.4, which in turn would cause some inaccuracy in the configured period. This inaccuracy will cause the ToD to drift from the actual time as much as 953.67ns after a period of 1 second. You would notice that after every 5 cycles, 0x0000.4 accumulates to 0x0002. If the TOD is able to add 0x0002 of fractional nanosecond into the ToD once after every period of 5 cycles, then it will correct the drift.

Therefore, for the 10G case, DRIFT_ADJUST_NS is now configured to 0x0, DRIFT_ADJUST_FNS is configured to 0x0002 and ADJUST_RATE is configured to 0x5.

The Packet Classifier decodes the packet types of incoming PTP packets and returns the decoded information aligned with SOP to the 10GbE MAC IP.

C.1. Block Diagram

Figure C–1 shows the block diagram for the Packet Classifier.

Figure C–1. Packet Classifier Block Diagram

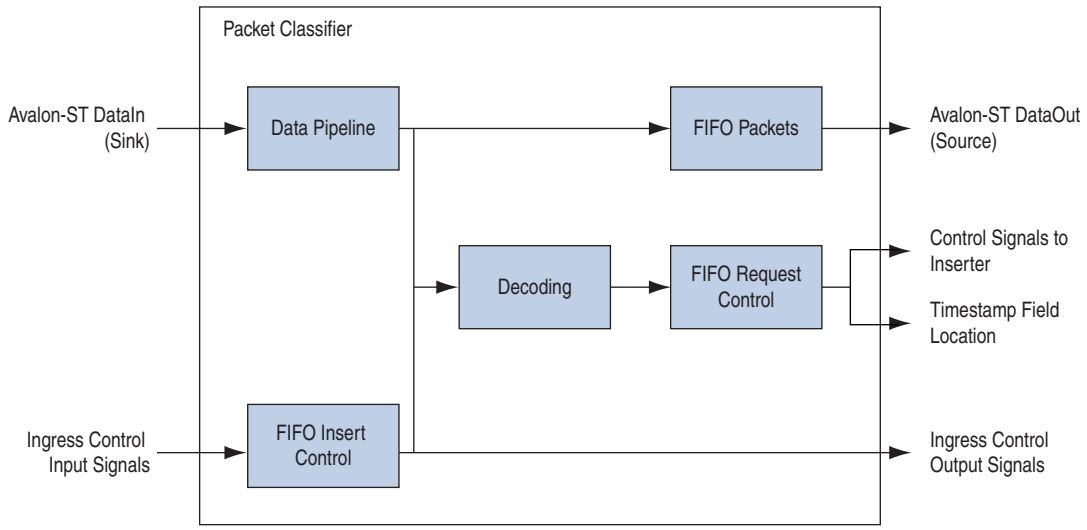

The Packet Classifier block diagram comprises the following components:

- Data Pipeline—holds the data frame up to a specified number of cycles. The number of cycles is determined by the largest length type field.
- FIFO Packets—holds the Avalon-ST frame data.
- FIFO Insert Control—the ingress control input bus that includes the signals required for decoding logics and signals to the MAC that is required to be aligned with SOP.
- FIFO Request Control—contains decoded data such as control signals to inserter and timestamp field locations.
- Decoding—Decodes packet types of incoming PTP packets and returns the decoded data to be stored in the FIFO request control block.

C.2. Packet Classifier Signals

C.2.1. Common Clock and Reset Signals

Table C–1 describes the common clock and reset signals for the Packet Classifier.

Table C–1. Clock and Reset Signals for the Packet Classifier

Signal	Direction	Width	Description
clk	Input	1	156.25-MHz register access reference clock.
reset	Input	1	Assert this signal to reset the clock.

C.2.2. Avalon-ST Interface Signals

Table C–2 lists the Avalon-ST DataIn (sink) interface signals for the Packet Classifier.

Table C–2. Avalon-ST DataIn Interface Signals for the Packet Classifier

Signal	Direction	Width	Description
data_sink_sop	Input	1	The Avalon-ST input frames.
data_sink_eop	Input	1	
data_sink_valid	Input	1	
data_sink_ready	Output	1	
data_sink_data	Input	64	
data_sink_empty	Input	3	
data_sink_error	Input	1	

Table C–3 lists the Avalon-ST DataOut (source) interface signals for the Packet Classifier.

Table C–3. Avalon-ST DataOut Interface Signals for the Packet Classifier

Signal	Direction	Width	Description
data_src_sop	Input	1	The Avalon-ST output frames.
data_src_eop	Input	1	
data_src_valid	Input	1	
data_src_ready	Output	1	
data_src_data	Input	64	
data_src_empty	Input	3	
data_src_error	Input	1	

C.2.3. Ingress Control Signals

Table C–4 describes the ingress control signals for the Packet Classifier.

Table C–4. Ingress Control Signals for the Packet Classifier (Part 1 of 2)

Signal	Direction	Width	Description
tx_etstamp_ins_ctrl_in_ingress_timestamp_96b	Input	96	96-bit format of ingress timestamp that holds data so that the output can align with the start of an incoming packet.
tx_etstamp_ins_ctrl_in_ingress_timestamp_64b	Input	64	64-bit format of ingress timestamp that holds data so that the output can align with the start of an incoming packet.
tx_etstamp_ins_ctrl_out_ingress_timestamp_96b	Output	96	96-bit format of ingress timestamp that holds data so that the output can align with the start of an outgoing packet.
tx_etstamp_ins_ctrl_out_ingress_timestamp_64b	Output	64	64-bit format of ingress timestamp that holds data so that the output can align with the start of an outgoing packet.
tx_egress_timestamp_request_in_valid	Input	1	Assert this signal when timestamp is required for the particular frame. This signal must be aligned to the start of an incoming packet.
tx_egress_timestamp_request_in_fingerprint	Input	4	A width-configurable fingerprint that correlates timestamps for incoming packets.
tx_egress_timestamp_request_out_valid	Output	1	Assert this signal when timestamp is required for the particular frame. This signal must be aligned to the start of an outgoing packet.
tx_egress_timestamp_request_out_fingerprint	Output	4	A width-configurable fingerprint that correlates timestamps for outgoing packets.
clock mode	Input	2	Determines the clock mode. 00: Ordinary clock 01: Boundary clock 10: End to end transparent clock 11: Peer to peer transparent clock
pkt_with_crc	Input	1	Indicates whether or not a packet contains CRC. 1: Packet contains CRC 0: Packet does not contain CRC
tx_etstamp_ins_ctrl_in_residence_time_update	Input	1	Indicates the update for residence time. 1: Allows update for residence time based on decoded results. 0: Prevents update for residence time. When this signal is deasserted, tx_etstamp_ins_ctrl_out_residence_time_update also gets deasserted.

Table C–4. Ingress Control Signals for the Packet Classifier (Part 2 of 2)

Signal	Direction	Width	Description
tx_etstamp_ins_ctrl_in_residence_time_calc_format	Input	1	Format of the timestamp to be used for calculating residence time. This signal must be aligned to the start of an incoming packet. A value of 0 indicates 96 bit timestamp format while 1 indicates 64 bit timestamp format.
tx_etstamp_ins_ctrl_out_residence_time_calc_format	Output	1	Format of the timestamp to be used for calculating residence time. This signal must be aligned to the start of an outgoing packet. A value of 0 indicates 96 bit timestamp format while 1 indicates 64 bit timestamp format.

C.2.4. Control Insert Signals

Table C–5 describes the control insert signals for the Packet Classifier. These signals must be aligned to the start of a packet.

Table C–5. Control Insert Signals for the Packet Classifier

Signal	Direction	Width	Description
tx_etstamp_ins_ctrl_out_checksum_zero	Output	1	Assert this signal to set the checksum field.
tx_etstamp_ins_ctrl_out_checksum_correct	Output	1	Assert this signal to correct the packet checksum by updating the checksum correction specified by tx_etstamp_ins_ctrl_out_offset_checksum_correction.
tx_etstamp_ins_ctrl_out_timestamp_format	Output	1	The timestamp format of the frame where the timestamp is inserted.
tx_etstamp_ins_ctrl_out_timestamp_insert	Output	1	Assert this signal to insert timestamp into the associated frame.
tx_etstamp_ins_ctrl_out_residence_time_update	Output	1	Assert this signal to add the residence time into the correction field of the PTP frame.

C.2.5. Timestamp Field Location Signals

Table C–6 describes the timestamp field location signals for the Packet Classifier. These signals must be aligned to the start of a packet.

Table C–6. Timestamp Field Location Signals for the Packet Classifier

Signal	Direction	Width	Description
tx_etstamp_ins_ctrl_out_offset_timestamp	Output	16	Indicates the location of the timestamp field.
tx_etstamp_ins_ctrl_out_offset_correction_field	Output	16	Indicates the location of the correction field.
tx_etstamp_ins_ctrl_out_offset_checksum_field	Output	16	Indicates the location of the checksum field.
tx_etstamp_ins_ctrl_out_offset_checksum_correction	Output	16	Indicates the location of the checksum corrector field.

D. ToD Synchronizer

The ToD Synchronizer provides a high accuracy synchronization of time of day from a master ToD clock to a slave ToD clock. This synchronizer provides more user flexibility for your design.

The IEEE 1588v2 specifies multiple type of PTP devices, which include the following clocks:

- ordinary clock
- boundary clock
- transparent clock
- peer to peer transparent clock

Some of these PTP devices, boundary clock for example, consists of multiple ports that act as master or slave in the IEEE 1588v2 system. All these ports may share a common system clock or have its own individual clock. If every port has an individual ToD running on its own clock, then you must implement a method to instantiate one ToD clock as the master and the rest of the ToD clocks synchronized to this master ToD clock.

For this purpose, Altera provides the ToD synchronizer module. This module synchronizes a master ToD and a slave ToD in the following conditions:

- Master and slave ToD clocks are in the same frequency within the range of 125 MHz and 156.25 MHz, but different phase.
- Master and slave ToD clocks are same in the same frequency within the range of 125 MHz and 156.25 MHz, but different PPM.
- Master and slave ToD clocks are in different frequencies (25 MHz or 156.25 MHz).

D.1. Device Family Support

Table D–1 shows the level of support offered by the ToD clock for each Altera device family.

Table D–1. Device Family Support

Device Family	Support
Arria V GX/GT/GZ/SOC	Preliminary
Cyclone V/SOC	Preliminary
Stratix V GX/GT	Preliminary
Other device families	No support

D.2. Block Diagram

Figure D–1 shows the connections between the ToD Synchronizer, master ToD, slave ToD, and sampling clock PLL.

Figure D–1. Connection between ToD Synchronizer, Master ToD, Slave ToD, and Sampling Clock PLL

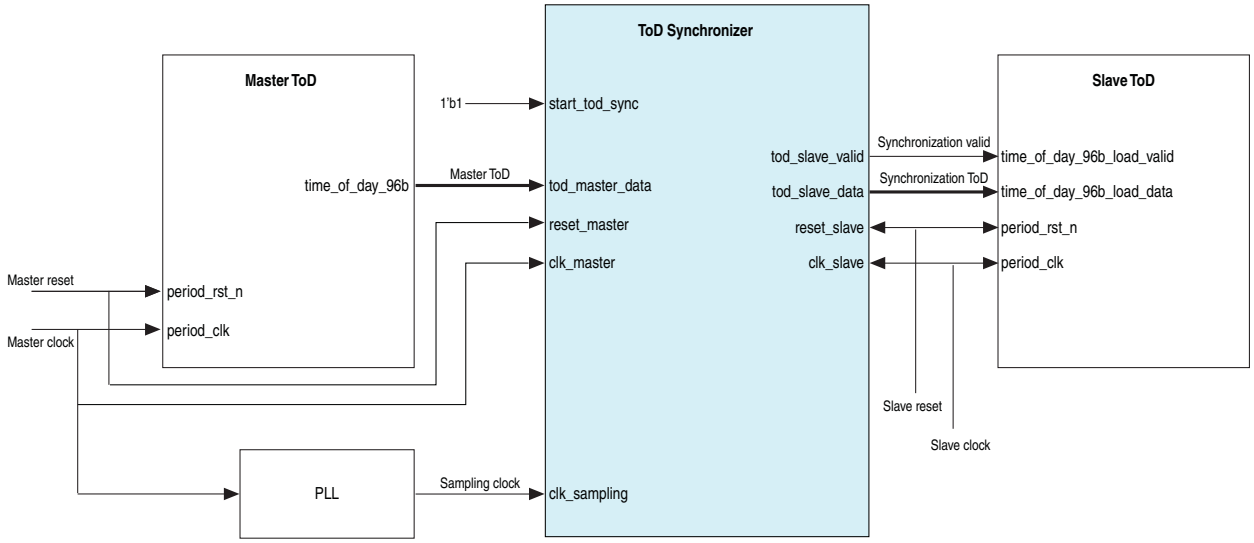

The ToD Synchronizer block diagram comprises the following components::

- Master TOD clock domain—consists of three interfaces: `clk_master`, `reset_master`, and `tod_master_data`.
- Slave TOD clock domain—consists of five interfaces: `clk_slave`, `reset_slave`, `tod_slave_valid`, `tod_slave_data`, and `start_tod_sync`.
- Sampling clock PLL—consists of the `clk_domain` interface.

The Tod Synchronizer module synchronizes the master ToD clock domain with the slave ToD clock domain. The dual-clock FIFO in the Tod Synchronizer block takes in the time of day from the master ToD clock domain and transfers it to the slave ToD clock domain. The slave ToD then will load the synchronized time of day into its own internal counter, which then increments based on the new value.

As the ToD transfer is in progress, the master ToD domain keeps incrementing. When the ToD reaches the slave ToD clock domain and is ready to be loaded, it is much slower than the master ToD domain. To achieve high accuracy synchronization, the latency caused by the transfer must be reflected in the synchronized ToD.

The sampling clock PLL (`clk_sampling`) samples the FIFO fill level and calculates the latency through the FIFO. For better accuracy, the sampling clock must be derived from the master (`clk_master`) or slave (`clk_slave`) clock domain using a PLL.

If you use the recommended sampling clock frequency, the ToD Synchronizer module takes 64 clock cycles of sampling clock for every newly synchronized ToD to be valid at the output port.

Altera recommends that you use the following sampling clock frequencies:

- 1G master and slave—(64/63)*125MHz
- 10G master and slave—(64/63)*156.25MHz
- 1G master and 10G slave—(16/63)*125MHz or (64/315)*156.25MHz
- 10G master and 1G slave—(16/63)*125MHz or (64/315)*156.25MHz

Table D–2 shows the settings to achieve the recommended factors for Stratix V PLL.

Table D–1. Settings to Achieve The Recommended Factors for Stratix V PLL

Settings	64/63	16/63	64/315
M-Counter	64	16	64
N-Counter	21	03	21
C-Counter	03	21	15

D.3. ToD Synchronizer Parameter Settings

Table D–2 describes the ToD Synchronizer configuration parameters.

Table D–2. ToD Synchronizer Configuration Parameters

Name	Value	Description
TOD_MODE	Between 0 and 1	Value that defines the time of day format that this block is synchronizing. The default value is 1. 1: 96-bits format (32 bits seconds, 48 bits nanosecond and 16 bits fractional nanosecond) 0: 64-bits format (48 bits nanosecond and 16 bits fractional nanoseconds).
SYNC_MODE	Between 0 and 2	Value that defines types of synchronization. The default value is 1. 0: Master clock frequency is 125MHz (1G) while slave is 156.25MHz (10G). 1: Master clock frequency is 156.25MHz (10G) while slave is 125MHz (1G). 2: Master and slave are same in the same frequency; can be in different ppm or phase. When you select this mode, specify the period of master and slave through the PERIOD_NSEC and PERIOD_FNSEC parameters.

Table D–2. ToD Synchronizer Configuration Parameters

Name	Value	Description
PERIOD_NSEC	Between 0 and 4'hF	A 4-bit value that defines the reset value for a nanosecond of period. The default value is 4'h6 to capture 6.4ns for 156.25MHz frequency. For 125MHz frequency (1G), set this parameter to 4'h8.
PERIOD_FNSEC	Between 0 and 16'hFFFF	A 4-bit value that defines the reset value for a fractional nanosecond of period. The default value is 16'h6666 to capture 0.4ns of 6.4ns for 156.25MHz frequency. For 125MHz frequency (1G), set this parameter to 16'h0.

D.4. ToD Synchronizer Signals

D.4.1. Common Clock and Reset Signals

Table D–2 describes the common clock and reset signals for the ToD Synchronizer.

Table D–2. Clock and Reset Signals for the ToD Synchronizer

Signal	Direction	Width	Description
clk_master	Input	1	Clock from master ToD domain.
reset_master	Input	1	Reset signal that is synchronized to the master ToD clock domain.
clk_slave	Input	1	Clock from slave ToD domain.
reset_slave	Input	1	Reset signal that is synchronized to the slave ToD clock domain.
clk_sampling	Input	1	Sampling clock to measure the latency across the ToD Synchronizer.

D.4.2. Interface Signals

Table D–3 lists the interface signals for the ToD Synchronizer.

Table D–3. Interface Signals for the ToD Synchronizer (Part 1 of 2)

Signal	Direction	Width	Description
start_tod_sync	Input	1	Assert this signal to start the ToD synchronization process. When this signal is asserted, the synchronization process continues and the time of day from the master ToD clock domain will be repeatedly synchronized with the slave ToD clock domain.
tod_master_data	Input	1	This signal carries the 64-bit or 96-bit format data for the time of day from the master ToD. The width of this signal is determined by the TOD_MODE parameter.

Table D–3. Interface Signals for the ToD Synchronizer (Part 2 of 2)

Signal	Direction	Width	Description
tod_slave_valid			This signal indicates that the tod_data_slave signal is valid and ready to be loaded into the slave ToD clock in the following cycle. This signal will only be high for 1 cycle, every time a new ToD is successfully synchronized to the slave clock domain.
tod_slave_data[n-1:0]	Input	1	This signal carries the 64-bit or 96-bit format synchronized ToD that is ready to be loaded into the slave clock domain. The width of this signal is determined by the TOD_MODE parameter. The synchronized ToD will be 1 slave clock period bigger than the master ToD because it takes 1 slave clock cycle to load this data into the slave ToD.

This chapter provides additional information about the document and Altera.

Document Revision History

The following table shows the revision history for this document.

Date	Version	Changes
August 2014	3.4	■ Modified Chapter 2, Getting Started with Altera IP Cores to describe the new Quartus II software IP design flow. The IP core is upgraded to support the new IP Catalog. ■ Updated the parameter names in Table 2–1 on page 2–8. ■ Added a new feature—Unidirectional mode. ■ Added a new parameter—Enable unidirectional mode. ■ Added TX Unidirectional registers and signals. ■ Added 36-bit format to the fault signals in "Error Handling (Link Fault)" on page 7–21
February 2014	3.3	■ Removed information about Arria GX, HardCopy IV GX, and Stratix II GX devices. Altera no longer supports these devices. ■ Removed chapters about 1G/10GbE MAC and 10M-10GbE MAC with IEEE 1588v2 design examples. ■ Updated Table 1–2 on page 1–3 with 1G/10Gbps Ethernet PHY support. ■ Edited information for the `avalon_st_rxstatus_error` register. The error status is no longer invalid when CRC and/or padding removal is enabled. ■ Added clock information in "Pause Frame Transmission" on page 7–18.
May 2013	3.2.1	■ Added Cyclone V performance and resource utilization data for 10GbE MAC in Table 1–5 on page 1–5 and Table 3–8 on page 3–19. ■ Edited the `FWD_PFC` reset value in Table 8–4 on page 8–17. ■ Edited the PMA analog and digital delay information in Table 8–6 and Table 8–7 on page 8–19. ■ Renamed `tx_ingress_timestamp_valid` to `tx_etstamp_ins_ctrl_residence_time_update`.

Date	Version	Changes
May 2013	3.2	■ Added device support for Arria V SoC and Cyclone V SoC devices. ■ Added Stratix V performance and resource utilization data for 10GbE MAC and 10M-10GbE MAC in Table 1–6 and Table 1–7 on page 1–6. ■ Added information for the **Enable Multi-Speed 10M-10Gb MAC** parameter in Table 2–1 on page 2–8. ■ Added information about minimum IPG for receive path in Table 7–2 on page 7–12. ■ Added information about 10 Mbps and 100 Mbps in "IEEE 1588v2" on page 7–22. ■ Renamed `rx_framedecoder_control` register to `rx_frame_control` register. ■ Added information about 10 Mbps and 100 Mbps in Table 8–5 on page 8–18, Table 9–14 on page 9–25, and Table 9–15 on page 9–25. ■ Added information about PMA analog and digital delay in Table 8–6 and Table 8–7 on page 8–19. ■ Updated Figure 9–1 to include MII signals and the `speed_sel` signal. ■ Added description about MII signals for 10 Mbps and 100 Mbps modes in Table 9–6. ■ Added description about the `speed_sel` signal in "10M-10GbE MAC Speed Control Signal" on page 9–20. ■ Added timing diagrams for the IEEE 1588v2 timestamp of frames observed on the TX path in Figure 9–9 through Figure 9–12 on page 9–30. ■ Added 10M-10GbE MAC with IEEE 1588v2 Design Example. ■ Added the following sections: "Sharing TX and RX Clocks for Multi-Port System Design" on page 10–2 and "Sharing Reference Clocks for Multi-Port System Design" on page 10–2. ■ Updated ToD information in Table B–5 on page B–3. ■ Added information for the following registers: `DriftAdjust` and `DriftAdjustRate`, in Table B–6 on page B–4. ■ Added Appendix D, ToD Synchronizer.
November 2012	3.1.1	Edited the description for the `tx_transfer_status` signal.
November 2012	3.1	■ Added support for Arria V and Stratix V devices. ■ Added information for the following GUI parameters: **1G/10G MAC**, **Enable Time Stamping**, **Enable PTP 1-Step Clock Support**, and **Timestamp Fingerprint Width**, in Table 2-1. ■ Updated the following design examples:10GbE MAC Design Examples and 1G/10GbE MAC Design Example. ■ Added the following chapters: 10GbE MAC with IEEE 1588v2 Design Example and 1G/10GbE MAC with IEEE 1588v2 Design Example. ■ Added description about GMII signals for 1 Gbps mode in Table 9-5. ■ Added MAC registers with IEEE 1588v2 feature for 1 Gbps mode in Table 8-5. ■ Updated RX ingress timestamp and TX egress timestamp interface signals for IEEE 1588v2 in Table 9-9 and Table 9-10. ■ Added TX instant control timestamp interface signals for IEEE 1588v2 in Table 9-11. ■ Updated Figure 9-1 to include GMII and IEEE 1588v2 signals. ■ Added Appendix C, Packet Classifier.
July 2012	3.0.1	Added the Early Access 1GbE MAC feature.

Date	Version	Changes
July 2012	3.0	■ Added support for Arria V GT. ■ Revised the "Registers", "Interface Signals", and "Design Considerations" sections into individual chapters. ■ Added the Register Initialization section in Chapter 5. ■ Added the 10GbE MAC and PHY Connection with XGMII section in Chapter 7.
May 2011	2.0	■ Added a new section IP Core Verification. ■ Revised the Performance and Resource Utilization section in Chapters 1 and 3. ■ Added new features option in the MAC parameter settings. ■ Updated the design example file directory structure in Table 3–3 on page 3–5. ■ Added two new sections in Chapter 3—Creating a New 10GbE Design and 10GbE Design Parameter Settings. ■ Added a new section 10GbE Design Transmit and Receive Latencies. ■ Updated the Transmit Datapath and Receive Datapath sections to describe the new preamble passthrough mode feature. ■ Updated the Congestion and Flow Control section to describe the new PFC feature. ■ Added a summary of register address expansion in Table 8–1. ■ Updated all register address and byte offset in table Table 8–2. ■ Revised Figure 9–1 and added two new figures to show the interface signals for TX only and RX only datapath. ■ Updated Table 9–2, Table 9–3, Table 9–4, Table 9–9 and Table 9–10 to describe the interface signals for preamble passthrough mode, datapath option, and PFC features. ■ Updated Figure 7–7, Figure 7–10, Figure 7–12, Figure 9–7, and Figure 9–8 to correct the bus signal names.

November 2010	1.2	■ Added new timing diagrams to the following sections:
		  ■ Frame Check Sequence (CRC-32) Insertion
		  ■ SDR XGMII Transmission
		  ■ CRC-32 and Pad Removal
		  ■ Pause Frame Transmission
		  ■ Error Handling (Link Fault)
		  ■ SDR XGMII to DDR XGMII Conversion
		■ Added Cyclone IV GX and Stratix III device family to the Device Family Support section in Chapter 1 and updated Arria GX device family support from preliminary to final.
		■ Revised the Performance and Resource Utilization section in Chapter 1.
		■ Revised the Ethernet Loopback Module section in Chapter 3.
		■ Revised the design simulation, compilation, and verification flow in Chapter 3.
		■ Added a new section Transmit and Receive Latencies.
		■ Updated the fault signalling figure, Figure 7–10 on page 7–19.
		■ Added frames types definition in Registers chapter.
		■ Corrected the register address of RX statistics counters and Tx statistics counters Table 8–2 on page 8–2.
		■ Revised the description of reset signals in MAC TX Only Variation section.

Date	Version	Changes
August 2010	1.1	■ Revised the Performance and Resource Utilization section in Chapter 1. ■ Corrected signal name to `rx_clk_clk` in the Mapping of Client Frame to Avalon-ST Transmit Interface section in Chapter 6.
June 2010	1.0	Initial release.

How to Contact Altera

To locate the most up-to-date information about Altera products, refer to the following table.

Contact *(1)*	Contact Method	Address
Technical support	Website	www.altera.com/support
Technical training	Website	www.altera.com/training
	Email	custrain@altera.com
Product literature	Website	www.altera.com/literature
Non-technical support (General)	Email	nacomp@altera.com
(Software Licensing)	Email	authorization@altera.com

Note:

(1) You can also contact your local Altera sales office or sales representative.

Typographic Conventions

The following table shows the typographic conventions this document uses.

Visual Cue	Meaning
Bold Type with Initial Capital Letters	Indicate command names, dialog box titles, dialog box options, and other GUI labels. For example, **Save As** dialog box. For GUI elements, capitalization matches the GUI.
bold type	Indicates directory names, project names, disk drive names, file names, file name extensions, software utility names, and GUI labels. For example, **\qdesigns** directory, **D:** drive, and **chiptrip.gdf** file.
Italic Type with Initial Capital Letters	Indicate document titles. For example, *Stratix IV Design Guidelines*.
italic type	Indicates variables. For example, *n* + 1. Variable names are enclosed in angle brackets (< >). For example, *<file name>* and *<project name>***.pof** file.
Initial Capital Letters	Indicate keyboard keys and menu names. For example, the Delete key and the Options menu.
"Subheading Title"	Quotation marks indicate references to sections within a document and titles of Quartus II Help topics. For example, "Typographic Conventions."

Visual Cue	Meaning
`Courier type`	Indicates signal, port, register, bit, block, and primitive names. For example, `data1`, `tdi`, and `input`. The suffix `n` denotes an active-low signal. For example, `resetn`. Indicates command line commands and anything that must be typed exactly as it appears. For example, `c:\qdesigns\tutorial\chiptrip.gdf`. Also indicates sections of an actual file, such as a Report File, references to parts of files (for example, the AHDL keyword `SUBDESIGN`), and logic function names (for example, `TRI`).
↵	An angled arrow instructs you to press the Enter key.
1., 2., 3., and a., b., c., and so on	Numbered steps indicate a list of items when the sequence of the items is important, such as the steps listed in a procedure.
■ ■ ■	Bullets indicate a list of items when the sequence of the items is not important.
	The hand points to information that requires special attention.
	A question mark directs you to a software help system with related information.
	The feet direct you to another document or website with related information.
	A caution calls attention to a condition or possible situation that can damage or destroy the product or your work.
	A warning calls attention to a condition or possible situation that can cause you injury.
	The envelope links to the Email Subscription Management Center page of the Altera website, where you can sign up to receive update notifications for Altera documents.
	The feedback icon allows you to submit feedback to Altera about the document. Methods for collecting feedback vary as appropriate for each document.