

AMD Geode™ CS5536 Companion Device Data Book

May 2007

Publication ID: 33238G

Downloaded from Arrow.com.

© 2007 Advanced Micro Devices, Inc. All rights reserved.
The contents of this document are provided in connection with Advanced Micro Devices, Inc. (“AMD”) products. AMD makes no representations or warranties with respect to the accuracy or completeness of the contents of this publication and reserves the right to make changes to specifications and product descriptions at any time without notice. No license, whether express, implied, arising by estoppel or otherwise, to any intellectual property rights is granted by this publication. Except as set forth in AMD’s Standard Terms and Conditions of Sale, AMD assumes no liability whatsoever, and disclaims any express or implied warranty, relating to its products including, but not limited to, the implied warranty of merchantability, fitness for a particular purpose, or infringement of any intellectual property right.

AMD’s products are not designed, intended, authorized or warranted for use as components in systems intended for surgical implant into the body, or in other applications intended to support or sustain life, or in any other application in which the failure of AMD’s product could create a situation where personal injury, death, or severe property or environmental damage may occur. AMD reserves the right to discontinue or make changes to its products at any time without notice.

Contacts

www.amd.com

Trademarks

AMD, the AMD Arrow logo, AMD Geode and combinations thereof, and GeodeLink are trademarks of Advanced Micro Devices, Inc.

Windows is a registered trademark of Microsoft Corporation in the United States and other jurisdiction.

WinBench is a registered trademark of Ziff Davis, Inc.

Other product names used in this publication are for identification purposes only and may be trademarks of their respective companies.

Downloaded from Arrow.com.

Contents

List of Figures 7

List of Tables 9

1.0 Overview 13
1.1 General Description 13
1.2 Features 14

2.0 Architecture Overview 17
2.1 GeodeLink™ PCI South Bridge 17
2.2 GeodeLink™ Control Processor 17
2.3 IDE Controller 18
2.4 Universal Serial Bus Controllers 18
2.5 Audio Codec 97 (AC97) Controller 18
2.6 Diverse Device 18
2.7 GeodeLink™ Interface Unit 20
2.8 Low Voltage Detect 20
2.9 Processor Support 21

3.0 Signal Definitions 23
3.1 Ball Assignments 25
3.2 Signal Descriptions 36

4.0 Global Concepts and Features 55
4.1 GeodeLink™ Architecture Overview 55
4.2 MSR Addressing 60
4.3 Typical GeodeLink™ Device 62
4.4 Clock Considerations 63
4.5 Reset Considerations 64
4.6 Memory and I/O Map Overview 67
4.7 Standard GeodeLink™ Device MSRs 74
4.8 Power Management 79
4.9 Component Revision ID 80

Downloaded from Arrow.com.

5.0 Module Functional Descriptions 81

5.1 GeodeLink™ Interface Unit 82
5.2 GeodeLink™ PCI South Bridge 83
5.3 AC97 Audio Codec Controller 88
5.4 IDE Controller 98
5.5 Universal Serial Bus Controller 101
5.6 Diverse Integration Logic 103
5.7 Programmable Interval Timer 107
5.8 Programmable Interrupt Control 110
5.9 Direct Memory Access Controller 117
5.10 Keyboard Emulation Logic 120
5.11 System Management Bus Controller 125
5.12 UART and IR Port 135
5.13 Low Pin Count Port 144
5.14 Real-Time Clock Features 154
5.15 General Purpose Input/Output 156
5.16 Multi-Function General Purpose Timer 163
5.17 Power Management Control 169
5.18 Flash Controller 180
5.19 GeodeLink™ Control Processor 188
5.20 Test Controller 190

6.0 Register Descriptions 193

6.1 GeodeLink™ Interface Unit Register Descriptions 195
6.2 GeodeLink™ PCI South Bridge Register Descriptions 222
6.3 AC97 Audio Codec Controller Register Descriptions 239
6.4 USB Controller Register Descriptions 257
6.5 IDE Controller Register Descriptions 331
6.6 Diverse Integration Logic Register Descriptions 343
6.7 Floppy Port Register Descriptions 369
6.8 Programmable Interval Timer Register Descriptions 371
6.9 Programmable Interrupt Controller Register Descriptions 379
6.10 System Management Bus Register Descriptions 394
6.11 Keyboard Emulation Logic Register Descriptions 401
6.12 UART and IR Port Register Descriptions 407
6.13 Direct Memory Access Register Descriptions 447
6.14 Low Pin Count Register Descriptions 466
6.15 Real-Time Clock Register Descriptions 469
6.16 GPIO Device Register Descriptions 480
6.17 Multi-Function General Purpose Timer Register Descriptions 513
6.18 Power Management Controller Register Descriptions 524
6.19 Flash Controller Register Descriptions 549
6.20 GeodeLink™ Control Processor Register Descriptions 561

Downloaded from Arrow.com.

7.0 Electrical Specifications 575
7.1 General Specifications 575
7.2 DC Characteristics 578
7.3 AC Characteristics 580
7.4 Power Supply Sequence Requirements 600
7.5 Low Voltage Detect (LVD) Parameters 604
7.6 Skip Parameter 605

8.0 Package Specifications 607

Appendix A Support Documentation 609
A.1 Order Information 609
A.2 Data Book Revision History 610

Downloaded from Arrow.com.

Downloaded from Arrow.com.

List of Figures

Figure 1-1. Block Diagram . . . 13
Figure 2-1. Mobile Computing System Block Diagram . . . 21
Figure 2-2. Single Board Computing System Block Diagram . . . 22
Figure 3-1. Typical Signal Groups . . . 23
Figure 3-2. 208-PBGA Ball Assignment Diagram . . . 26
Figure 4-1. Simplified GLIU with Generic GeodeLink™ Devices . . . 55
Figure 4-2. GeodeLink™ Architecture ASMI and Error Routing . . . 57
Figure 4-3. AMD Geode™ CS5536 Companion Device GeodeLink™ Architecture Topology . . . 58
Figure 4-4. Typical AMD Geode™ CS5536 Companion Device GeodeLink™ Device . . . 62
Figure 4-5. Reset Logic . . . 66
Figure 4-6. Direct ASMI Behavioral Model . . . 75
Figure 4-7. In-Direct ASMI Behavioral Model . . . 76
Figure 5-1. Module Block Diagram . . . 81
Figure 5-2. GLPCI_SB Block Diagram . . . 83
Figure 5-3. ACC Block Diagram . . . 88
Figure 5-4. AC Link Slot Scheme . . . 90
Figure 5-5. AC Link Output Frame . . . 90
Figure 5-6. AC Link Input Frame . . . 90
Figure 5-7. ACC PRD Table Example . . . 95
Figure 5-8. USB Controller Block Diagram . . . 101
Figure 5-9. Diverse Logic Block Diagram . . . 103
Figure 5-10. I/O Space LBAR - Fixed Target Size . . . 104
Figure 5-11. I/O Space LBAR - Variable Target Size . . . 105
Figure 5-12. Memory Space LBAR . . . 105
Figure 5-13. PIT Block Diagram . . . 107
Figure 5-14. PIT Counter Latch Command Format . . . 108
Figure 5-15. PIT Read-Back Command Format . . . 109
Figure 5-16. PIT Status Byte Format . . . 109
Figure 5-17. PIC Block Diagram . . . 110
Figure 5-18. Cascading 8259As for LPIC . . . 112
Figure 5-19. PIC 8259A Block Diagram . . . 113
Figure 5-20. DMA Controller Block Diagram . . . 117
Figure 5-21. KEL Block Diagram . . . 120
Figure 5-22. SMB Controller Block Diagram . . . 125
Figure 5-23. SMB Bit Transfer . . . 127
Figure 5-24. SMB START and STOP Conditions . . . 127
Figure 5-25. SMB Data Transaction . . . 128
Figure 5-26. SMB Acknowledge Cycle . . . 128
Figure 5-27. SMB Complete Data Transaction . . . 129
Figure 5-28. SMB Byte Write . . . 133
Figure 5-29. SMB Page Write . . . 133
Figure 5-30. SMB Current Address Read . . . 133
Figure 5-31. SMB Random Read . . . 134
Figure 5-32. SMB Sequential Reads . . . 134
Figure 5-33. UART/IR Overview Diagram . . . 135
Figure 5-34. UART Serial Data Stream Format . . . 138

Downloaded from Arrow.com.

Figure 5-35. Real Dongle Interface . . . 142
Figure 5-36. Virtual Dongle Interface . . . 143
Figure 5-37. LPC Block Diagram . . . 144
Figure 5-38. Start of Cycle Timing Diagram . . . 147
Figure 5-39. Abort Mechanism Timing Diagram . . . 147
Figure 5-40. DMA Cycle Timing Diagram . . . 148
Figure 5-41. Start Frame Waveform . . . 150
Figure 5-42. IRQ Frame Waveform . . . 150
Figure 5-43. Stop Frame Waveform . . . 150
Figure 5-44. FWH Read Cycle . . . 152
Figure 5-45. FWH Write Cycle . . . 153
Figure 5-46. RTC Block Diagram . . . 154
Figure 5-47. Recommended External Component Connections . . . 155
Figure 5-48. GPIO Configuration . . . 159
Figure 5-49. MFGPT Top Level Block Diagram . . . 163
Figure 5-50. MFGPT Block Diagram . . . 166
Figure 5-51. MFGPT Bit Reverse Logic . . . 167
Figure 5-52. PMC Power Management Elements . . . 171
Figure 5-53. PMC System Sleep Sequence . . . 172
Figure 5-54. PMC System Wakeup Sequence . . . 173
Figure 5-55. Flash Controller NAND Read Cycle . . . 181
Figure 5-56. NOR Flash Basic Timing . . . 184
Figure 5-57. NOR Flash with Wait States Timing . . . 185
Figure 5-58. NAND Flash Command/Address Timing . . . 186
Figure 5-59. NAND Data Timing with No Wait States and No Prefetch (for the first data read) . . . 187
Figure 5-60. NAND Data Timing with Wait States . . . 187
Figure 5-61. GLCP Block Diagram . . . 188
Figure 5-62. TAP Controller Boundary Scan Block Diagram . . . 190
Figure 6-1. UART Register Bank Architecture . . . 413
Figure 6-2. DMA Control Signals Routing . . . 432
Figure 7-1. Clock Reference Definition . . . 580
Figure 7-2. AC Reference Timing and Test Definition . . . 580
Figure 7-3. Output Reference Timing and Test Definition . . . 581
Figure 7-4. Input Reference Timing and Test Definition . . . 581
Figure 7-5. IDE Data In Timing Non-UltraDMA . . . 586
Figure 7-6. IDE UltraDMA Data Out Timing . . . 587
Figure 7-7. IDE UltraDMA Data In Timing . . . 588
Figure 7-8. RESET_STAND# Timing Diagram . . . 601
Figure 7-9. V_{CORE} Timing Diagram . . . 602
Figure 7-10. V_{IO_VSB} Timing Diagram . . . 603
Figure 7-11. LVD Electrical Parameter Definitions . . . 604
Figure 7-12. Debounce Functionality . . . 604
Figure 7-13. Skip Electrical Parameters . . . 605
Figure 8-1. PBGA 208 Top View/Dimensions . . . 607
Figure 8-2. PBGA 208 Bottom View/Dimensions . . . 608
Figure A-1. AMD Geode™ CS5536 Companion Device OPN Example . . . 609

Downloaded from Arrow.com.

List of Tables

Table 3-1. Abbreviations/Definitions . . . 25
Table 3-2. Ball Assignments: Sorted by Ball Number . . . 27
Table 3-3. Ball Assignments: Sorted Alphabetically by Signal Name . . . 31
Table 3-4. Buffer Type Characteristics . . . 33
Table 3-5. Boot Options Selection . . . 34
Table 3-6. DIVIL_BALL_OPT (DIVIL MSR 51400015h) . . . 34
Table 3-7. IDE and Flash Ball Multiplexing . . . 40
Table 3-8. GPIO Options . . . 47
Table 3-9. GPIOx Available Functions Descriptions . . . 49
Table 4-1. MSR Routing Conventions . . . 60
Table 4-2. MSR Addresses from AMD Geode™ LX Processor . . . 60
Table 4-3. Clock Sources and Clock Domains . . . 63
Table 4-4. AMD Geode™ CS5536 Companion Device Register Space Map Except Diverse Device . . . 68
Table 4-5. Diverse Device Space Map Except Legacy I/O . . . 69
Table 4-6. Legacy I/O: 000h-4FFh . . . 69
Table 4-7. GLD_MSR_CAP Bit Descriptions . . . 74
Table 4-8. Standard GLD_MSR_SMI Format . . . 74
Table 4-9. GLD_MSR_SMIs Summary . . . 77
Table 4-10. MSR Power Management Model . . . 78
Table 4-11. Sleep Driven PCI Signals . . . 79
Table 4-12. Sleep Driven IDE Signals . . . 79
Table 5-1. GLIU Port Connections . . . 82
Table 5-2. GLIU Descriptors Reserved for GeodeLink™ Devices . . . 82
Table 5-3. CIS Serial Bits Assignment and Descriptions . . . 86
Table 5-4. Audio Bus Master Descriptions . . . 89
Table 5-5. SLOTREQ to Output Slot Mapping . . . 92
Table 5-6. Physical Region Descriptor (PRD) Format . . . 94
Table 5-7. PCM Data format (Byte and Channel Ordering) . . . 95
Table 5-8. Physical Region Descriptor Format . . . 99
Table 5-9. UDMA Signal Definitions . . . 100
Table 5-10. Special Cycle Decodes . . . 106
Table 5-11. 8254 PIT Register Ports . . . 108
Table 5-12. IRQ Map - Primary and LPC . . . 111
Table 5-13. IRQ Map - Unrestricted Sources Y . . . 111
Table 5-14. IRQ Map - Unrestricted Sources Z . . . 112
Table 5-15. 8259A PIC I/O Addresses and I/O Data . . . 114
Table 5-16. DMA Source Selection . . . 119
Table 5-17. KEL Mixed Environment . . . 122
Table 5-18. Comparison of SMB, Industry Standard Two-wire Interface, and ACCESS.bus . . . 126
Table 5-19. SMB Native Registers Map . . . 130
Table 5-20. UART/IR Controller Native Register Bit Map . . . 136
Table 5-21. Real Dongle Interface Signals . . . 142
Table 5-22. Cycle Types Supported . . . 145
Table 5-23. Cycle Field Definitions: Target Memory, I/O, and DMA . . . 146
Table 5-24. Host Initiated Cycles . . . 148

Downloaded from Arrow.com.

Table 5-25. DMA Initiated Cycles . . . 148
Table 5-26. IRQ Data Frames . . . 149
Table 5-27. FWH Read Cycle . . . 152
Table 5-28. FWH Write Cycle . . . 153
Table 5-29. External Component Recommended Specifications . . . 155
Table 5-30. Effect on Feature Bit . . . 158
Table 5-31. 16-Bit GPIO Control Register Example . . . 158
Table 5-32. MFGPT Prescaler Clock Divider . . . 167
Table 5-33. MFGPT Pulse Density Modulation Example . . . 168
Table 5-34. Supported ACPI Power Management States . . . 169
Table 5-35. PM Events and Functions . . . 176
Table 5-36. ECC Parity/Bit Address Relationship . . . 182
Table 5-37. NAND Flash External Timing Parameters . . . 186
Table 5-38. TAP Controller Instructions . . . 191
Table 6-1. Standard GeodeLink™ Device MSRs Summary . . . 195
Table 6-2. P2D Descriptor MSRs Summary . . . 195
Table 6-3. GLIU Specific MSRs Summary . . . 196
Table 6-4. IOD Descriptor MSRs Summary . . . 197
Table 6-5. Standard GeodeLink™ Device MSRs Summary . . . 222
Table 6-6. GLPCI_SB Specific MSRs Summary . . . 222
Table 6-7. PCI Configuration Registers . . . 223
Table 6-8. Standard GeodeLink™ Device MSRs Summary . . . 239
Table 6-9. ACC Native Registers Summary . . . 240
Table 6-10. Standard GeodeLink™ Device MSRs Summary . . . 257
Table 6-11. USB Specific MSRs Summary . . . 257
Table 6-12. USB Open Host Controller Interface Native Registers Summary . . . 258
Table 6-13. USB Enhanced Host Controller Interface Native Registers Summary . . . 259
Table 6-14. USB Device Controller Native Registers Summary . . . 259
Table 6-15. USB Option Controller Native Registers Summary . . . 261
Table 6-16. UDC Reaction During the STATUS-OUT Stage of a CONTROL Transfer . . . 323
Table 6-17. Standard GeodeLink™ Device MSRs Summary . . . 331
Table 6-18. IDE Controller Specific MSRs Summary . . . 331
Table 6-19. IDE Native Registers Summary . . . 332
Table 6-20. Standard GeodeLink™ Device MSRs Summary . . . 343
Table 6-21. DIVIL Specific MSRs Summary . . . 343
Table 6-22. Floppy Port Specific MSRs Summary . . . 369
Table 6-23. PIT Specific MSRs Summary . . . 371
Table 6-24. PIT Native Registers Summary . . . 371
Table 6-25. PIC Specific MSRs Summary . . . 379
Table 6-26. PIC Native Registers Summary . . . 379
Table 6-27. SMB Native Registers Summary . . . 394
Table 6-28. KEL Specific MSRs Summary . . . 401
Table 6-29. KEL Native Registers Summary . . . 401
Table 6-30. KEL Legacy Registers Emulated Summary . . . 401
Table 6-31. UART/IR Controller Specific MSRs Summary . . . 407
Table 6-32. UART/IR Controller Native Registers Summary . . . 407
Table 6-33. Secondary ID Encoding . . . 411
Table 6-34. Register Bank Summary . . . 413
Table 6-35. Bank 0 Register Bit Map . . . 414
Table 6-36. EIR Non-Extended Mode Interrupt Priorities . . . 418
Table 6-37. Bit Settings for Parity Control . . . 421
Table 6-38. Bank Select Encoding . . . 422
Table 6-39. Bank 1 Bit Map . . . 428
Table 6-40. Bits Cleared on Fallback . . . 428
Table 6-41. Baud Generator Divisor Settings . . . 429

Downloaded from Arrow.com.

Table 6-42. Bank 2 Bit Map 430
Table 6-43. DMA Threshold Levels 432
Table 6-44. Bank 3 Bit Map 435
Table 6-45. Bank 4 Bit Map 436
Table 6-46. Bank 5 Bit Map 437
Table 6-47. Bank 6 Bit Map 438
Table 6-48. Bank 7 Bit Map 440
Table 6-49. CEIR, Low Speed Demodulator (RXHSC = 0) (Frequency Ranges in KHz) 441
Table 6-50. Consumer IR High Speed Demodulator (RXHSC = 1) (Frequency Ranges in KHz) 441
Table 6-51. Sharp-IR Demodulator (Frequency Ranges in KHz) 441
Table 6-52. Modulation Carrier Pulse Width 442
Table 6-53. CEIR Carrier Frequency Encoding 443
Table 6-54. IR Receive Input Selection 446
Table 6-55. DMA Specific MSRs Summary 447
Table 6-56. DMA Native Registers Summary 447
Table 6-57. LPC Specific MSRs Summary 466
Table 6-58. RTC Specific MSRs Summary 469
Table 6-59. RTC Native Registers Summary 469
Table 6-60. GPIO Low/High Bank Feature Bit Registers Summary 480
Table 6-61. GPIO Input Conditioning Function Registers Summary 482
Table 6-62. GPIO Interrupt and PME Mapper Registers Summary 483
Table 6-63. Low Bank Atomic Register Map 484
Table 6-64. Low Bank Atomic Bit Descriptions 484
Table 6-65. High Bank Atomic Register Map Format 485
Table 6-66. High Bank Atomic Bit Descriptions Format 485
Table 6-67. MFGPT Specific MSRs Summary 513
Table 6-68. MFGPT Native Registers Summary 513
Table 6-69. PMC Specific MSRs Summary 524
Table 6-70. ACPI Registers Summary 524
Table 6-71. PM Support Registers Summary 525
Table 6-72. Flash Controller Specific MSRs Summary 549
Table 6-73. Flash Controller Native Registers Summary 550
Table 6-74. Standard GeodeLink™ Device MSRs Summary 561
Table 6-75. GLPC Specific MSRs Summary 561
Table 6-76. Clock Mapping / Operational Settings 566
Table 7-1. Electro Static Discharge (ESD) 575
Table 7-2. Absolute Maximum Ratings 575
Table 7-3. Recommended Operating Conditions 576
Table 7-4. Current Consumption 577
Table 7-5. DC Characteristics 578
Table 7-6. Clock Timing Parameters 582
Table 7-7. Reset and Test Timing Parameters 583
Table 7-8. PCI, SUSP#, SUSPA#, and RESET_OUT# Timing Parameters 584
Table 7-9. IDE Register, PIO, and Multiword DMA Timing Parameters 585
Table 7-10. IDE UltraDMA Data Out Timing Parameters 587
Table 7-11. IDE UltraDMA Data In Timing Parameters 588
Table 7-12. Flash Timing Parameters 589
Table 7-13. USB Power Control Interface Timing Parameters 590
Table 7-14. USB Option and Phy Control Signal Timing Parameters 590
Table 7-15. SMB Timing Parameters 591
Table 7-16. AC97 Codec Timing Parameters 592
Table 7-17. LPC Timing Parameters 593
Table 7-18. Power Management and Processor Control Timing Parameters 594
Table 7-19. Miscellaneous Signals Except UART Timing Parameters 595

Downloaded from Arrow.com.

Table 7-20. UART Timing Parameters 596
Table 7-21. GPIO Signaling 597
Table 7-22. MFGPT Signaling 598
Table 7-23. JTAG Timing Parameters 599
Table 7-24. RESET_STAND# Timing 601
Table 7-25. V_{CORE} Timing 602
Table 7-26. V_{IO_VSB} Timing 603
Table 7-27. LVD Parameters 604
Table 7-28. Skip Parameters 605
Table A-1. Valid OPN Combinations 609
Table A-2. Revision History 610
Table A-3. Edits to Current Revision 610

Downloaded from Arrow.com.

1 Overview

1.1 General Description

The AMD Geode™ CS5536 companion device is designed to work with an integrated processor North Bridge component such as the AMD Geode™ LX processor. Together, the AMD Geode LX processor and CS5536 companion device provide a system-level solution well suited for the high-performance and low-power needs of a host of embedded devices including digital set-top boxes, mobile computing devices, thin client applications, and single board computers.

The internal architecture uses a single, high-performance modular structure based on GeodeLink™ architecture. This architecture yields high internal speed (over 4 GB/s) data movement and extremely versatile internal power management. The GeodeLink architecture is transparent to application software. Communication with the processor is over a 33/66 MHz PCI bus.

The CS5536 incorporates many I/O functions, including some found in typical superI/O chips, simplifying many system designs. Since the graphics subsystem is entirely contained in the AMD Geode LX processor, system interconnect is simplified. The device contains state-of-the-art power management that enables systems, especially battery powered systems, to significantly reduce power consumption.

Audio is supported by an internal controller, designed to connect to multiple AC97 compatible codecs. An IR (infrared) port supports all popular IR communication protocols. The IR port is shared with one of two industry-standard serial ports that can reach speeds of 115.2 kbps. An LPC (Low Pin Count) port is provided to facilitate connections to a superI/O should additional expansion, such as a floppy drive, be necessary, and/or to an LPC ROM for the system BIOS.

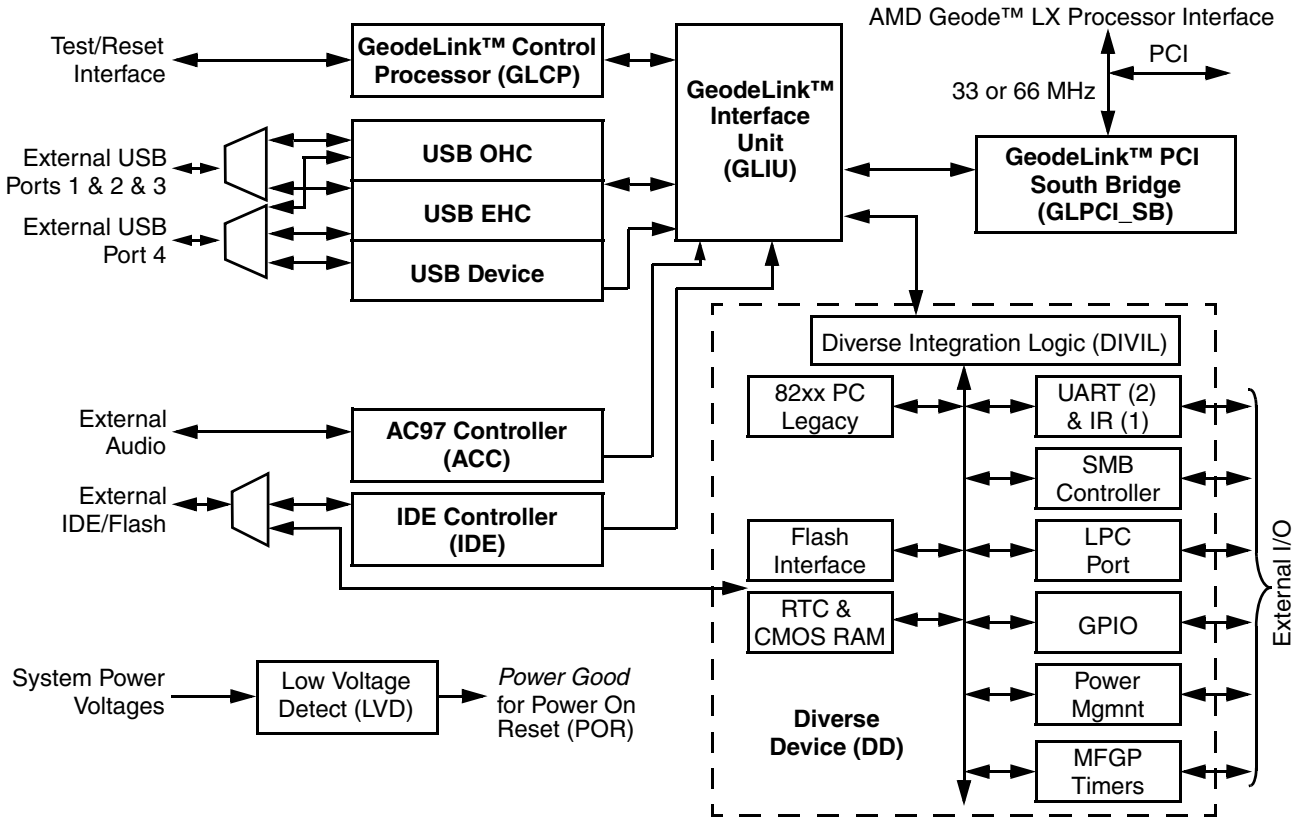

Figure 1-1. Block Diagram

Downloaded from Arrow.com.

The hard disk controller is compatible to the ATA-6 specification. The bus mastering IDE controller includes support for two ATA-compliant devices on one channel. The CS5536 companion device provides four Universal Serial Bus (USB) 2.0 compliant ports, supporting low speed, full speed, and high speed connections. All four ports are individually automatically associated with either the Open Host Controller Interface (OHCI) or the Enhanced Host Controller Interface (EHCI) depending on the attached device type. A battery-backed real-time clock (RTC) keeps track of time and provides calendar functions.

A suite of 82xx devices provides the legacy PC functionality required by most designs, including two PICs (Programmable Interrupt Controllers), one PIT (Programmable Interval Timer) with three channels, and DMA (Direct Memory Access) functions. The CS5536 companion device contains eight MFGPTs (Multi-Function General Purpose Timers) that can be used for a variety of functions. A number of GPIOs (General Purpose Input/Outputs) are provided, and are assigned to system functions on power-up (i.e., LPC port).

State-of-the-art power management features are attained with the division of the device into two internal power domains. The GPIOs and MFGPTs are distributed into each domain allowing them to act as wakeup sources for the device. The device provides full ACPI (Advanced Configuration Power Interface) compliance and supports industry-standard Wakeup and Sleep modes.

For implementation details and suggestions for this device, see the supporting documentation (i.e., application notes, schematics, etc.) on the AMD Embedded Developer Support Web site (http://www.amd.com/embedded/developer; NDA required).

1.2 Features

General Features

- Designed for use with the AMD Geode LX processor
- 208-Terminal PBGA (plastic ball grid array) package with internal heatspreader
- 3.3V I/O and 1.20V/1.25V/1.40V (nominal) Core operation
- Working and Standby power domains
- IEEE 1149.1 compliant TAP and boundary scan
- Commercial and industrial temperature ranges support

GeodeLink™ Interface Unit

- 64-Bit, 66 MHz operation
- Transparent to applications software and BIOS due to PCI VSM (virtual system module) implementation
- Non-blocking arbitration and routing of request and data packets
- Programmable routing descriptors
- Programmable use and activity monitors that generate optional ASMIs (asynchronous system management interrupts) for legacy power management purposes
- Programmable SSMI (synchronous system management interrupt) generators for selected range of addresses
- IDE Controller, GLIU (GeodeLink Interface Unit), and Diverse Device are the only SSMI sources

GeodeLink™ PCI Bridge (South Bridge)

- Provides a PCI interface for GeodeLink Devices:
  - PCI specification v2.2 compliant
  - 32-Bit, 33/66 MHz operation
  - Transaction FIFOs (First In/First Out)
  - Bus master or slave
  - Converts selected PCI configuration bus cycles to internal MSR (Model Specific Register) cycles
  - Capable of handling in-bound transactions immediately after reset - no setup
  - Mapping of PCI virtual configuration space to MSR space is done completely in Virtual System Architecture (VSA) code
  - Serialized processor control interface

GeodeLink™ Control Processor

- SUSP#/SUPA# handshake with power management logic provides Sleep control of all GeodeLink Devices

IDE Controller

- 100 MB/s IDE controller in UDMA-5 mode per the ATA-6 specification
- 5V interface
- Legacy and Enhanced PIO (Programmable I/O), MDMA (Multi DMA), and UDMA (Ultra DMA) modes
- One channel with two devices
- Multiplexed with Flash interface

Flash Interface

- Multiplexed with IDE interface
- Connects to array of industry standard NAND Flash and/or NOR Flash
- NOR optional execute-in-place boot source
- NAND optional file system
- General purpose ISA bus slave-like devices supported with configurable chip selects
- Hardware support for SmartMedia type ECC (Error Correcting Code) calculation off loading software intensive algorithm

Downloaded from Arrow.com.

USB Controller

- Supports four ports
- USB 1.1 supported by one OHCI-based host controller
- USB 2.0 supported by one EHCI-based host controller
- USB port four can be configured as a USB 2.0 compliant device
- Supports wakeup events
- Overcurrent and power control support
- GeodeLink master burst reads and writes

Audio Codec 97 (AC97) Controller

- AC97 specification v2.3 compliant interface to multiple audio codecs: Serial In, Serial Out, Sync Out, Bit Clock In
- Legacy “PC Beep” support
- Eight-channel buffered GeodeLink mastering interface
- ASMI and IRQ support
- Multiple codec support
- Surround sound support

Diverse Device

- 82xx Legacy Devices:
  - Two 8259A-equivalent PICs:
    - Shadow registers allow reading of internal registers
  - One 8254-equivalent PIT
  - Two 8237-equivalent DMA controllers:
    - 8-bit DMA supported (only)
  - Serial Ports 1 and 2:
    - Port 1 is shared with an IR port
    - 16550 and 16450 software compatible
    - Shadow register support for write-only bit monitoring
    - UART data rates up to 115.2 kbps
- IR (Infrared) Communication Port:
  - Shared with Serial Port 1
  - 16550 and 16450 software compatible
  - Shadow register support for write-only bit monitoring
  - Consumer-IR (TV-Remote) mode
  - Data rate up to 115.2 kbps (SIR)
  - HP-SIR (same as SIR above)
  - Selectable internal or external modulation/demodulation (Sharp-IR)
  - ASK-IR option of SHARP-IR
  - DASK-IR option of SHARP-IR
  - Consumer Remote Control supports RC-5, RC-6, NEC, RCA, and RECS 80
- System Management Bus (SMB) Controller:
  - Compatible with Intel System Management Bus, Industry Standard Two-wire interface, and ACCESS.bus
  - Bus master and slave operation
- LPC (Low Pin Count) Port:
  - Based on Intel LPC Interface specification v1.0
  - Serial IRQ support
  - Serial DMA support (8-bit only)
  - Boot source typically off external LPC
  - Supports firmware hub protocol
  - External bus masters not supported
- General Purpose I/Os (GPIOs):
  - Programmable: In, Out, I/O, Open-Drain, Pull-Up/Down, and Invert
  - Parallel bit read and write
  - Individual bit access eliminates Read-Modify-Write cycles
  - Input Conditioning Functions (ICF):
    - Input debounce/filter
    - Input event counter
    - Input edge detect
- Multi-Function General Purpose Timers (MFGPTs):
  - Eight MFGPTs - two are multiplexed with GPIOs for external usage
  - Two MFGPTs are powered by Standby power and can be used as wakeups
  - Watchdog timer generates reset, IRQ, ASMI, or NMI
  - Pulse Width Modulation (PWM)
  - Pulse Density Modulation (PDM)
  - Blink
- Real-Time Clock (RTC) with CMOS RAM:
  - Battery backed-up century calendar in days, day of the week, date of month, months, years and century, with automatic leap-year adjustment
  - Battery backed-up time of day in seconds, minutes, and hours that allows a 12 or 24 hour format and adjustments for daylight savings time
  - Binary Coded Decimal (BCD) or binary format for time keeping
  - DS1287, MC146818, and PC87911 compatibility
  - Selective lock mechanisms for the RTC RAM
  - Real-time alarm
  - V_{BAT} or $V_{STANDBY}$ power sources with automatic switching between them
  - 242 bytes of battery-backed CMOS RAM in two banks

Downloaded from Arrow.com.

- Power Management Controller:
  - ACPI (Advanced Configuration Power Interface) specification v2.0 compliant timer and register set
  - Supports APM (Advanced Power Management) and Legacy PM
  - PME (power management event) from GPIOs and/or on-chip sources
  - Working, Sleep, and Standby states
  - Wakeup circuits powered by Standby power rails while rest of component and system powered off
  - Automatic clock-off gating reduces power to inactive blocks
  - Flexible power supply controls including On/Off and Sleep button inputs
  - Generic Sleep output controls
  - ACPI-compliant four second fail-safe off
  - Low-voltage detect function for battery-powered applications
  - Suspend/Acknowledge handshake with AMD Geode LX processor
  - System over-temperature support
  - Low Voltage Detect (LVD) provides Power On Reset (POR) as well as continuous voltage monitoring for automatic system reset on a low voltage condition

Downloaded from Arrow.com.

2 Architecture Overview

The AMD Geode™ CS5536 companion device provides interfaces for all the common peripherals of an embedded device, plus offers expansion for additional needs, if required. Featuring a 33/66 MHz PCI interface to the AMD Geode™ LX processor, the AMD Geode CS5536 companion device is internally connected using the GeodeLink™ packet architecture. This architecture supports multiple simultaneous transactions and is totally transparent to all application software. GeodeLink architecture related operations are managed via Model Specific Registers (MSRs) that are detailed in Section 4.1.6 "Address Spaces and MSRs" on page 59.

As shown in Figure 1-1 on page 13, the CS5536 companion device is implemented with one GeodeLink Interface Unit (GLIU) that connects to the:

- GeodeLink PCI South Bridge
- GeodeLink Control Processor
- IDE Controller (IDE Controller multiplexed with Flash Interface)
- Universal Serial Bus Host Controller with Ports 1 to 4
- Universal Serial Bus Device Controller with Port 4
- Audio Codec 97 (AC97) Controller
- Diverse Device:
  - — Legacy DMA, Timer, and Interrupt (82xx PC Legacy)
  - — UARTs (2) and IR (1) Port (shared with UART1)
  - — System Management Bus (SMB) Controller
  - — Low Pin Count (LPC) Controller
  - — General Purpose I/O (GPIO) with Input Conditioning Functions (ICF)
  - — Multi-Function General Purpose Timers (MFGPTs)
  - — Flash Interface (multiplexed with IDE interface)
  - — Real-Time Clock (RTC) with CMOS RAM
  - — Power Management Controller (PMC)

The Low Voltage Detect (LVD) circuit is not a GeodeLink Device, but is connected to the Power Management Controller for voltage monitoring support.

2.1 GeodeLink™ PCI South Bridge

The GeodeLink PCI South Bridge (GLPCI_SB) provides a PCI interface for the CS5536 companion device. It acts as a PCI master or slave in providing PCI transactions to and from the CS5536 and the PCI bus. A special serial interface to the AMD Geode LX processor, the CPU Interface Serial (CIS), is provided that assists in the transfer of information between the CS5536 and the processor.

The interface is compliant to PCI specification v2.2 and may operate at up to 66 MHz. Optional bus signals PERR#, SERR#, LOCK#, and CLKRUN are not implemented. Within a PCI burst, zero wait state operation is achieved. The PCI interface supports programmable IDSEL selection, and can handle inbound transactions immediately after system reset.

2.2 GeodeLink™ Control Processor

The GeodeLink Control Processor (GLCP) is responsible for debug support and monitors system clocks in support of PMC operations.

The GLCP interfaces with a JTAG compatible Test Access Port (TAP) Controller that is IEEE 1149.1 compliant. During debug, it can be used to pass GeodeLink packets to/from the GeodeLink Interface Unit (GLIU). It is also used to support manufacturing test.

Downloaded from Arrow.com.

2.3 IDE Controller

The CS5536 companion device is compliant to the ATA-6 specification. The IDE interface supports one channel, that in turn supports two devices that can operate in PIO modes 0 to 4, MDMA modes 0 to 2, or UDMA modes 0 to 5 (up to 100 MB/s).

This interface is shared with the Flash Interface, using the same balls. The interface usage, immediately after reset, is defined by the boot options selected. After reset, the interface may be dynamically altered using DIVIL_BALL_OPT (DIVIL MSR 51400015h) (see Table 3-7 on page 40 for details on multiplexing).

The IDE interface provides a variety of features to optimize system performance, including 32-bit disk access, post write buffers, bus master, MDMA, look-ahead read buffer, and prefetch mechanism.

The IDE interface timing is completely programmable. Timing control covers the command active and recover pulse widths, and command block register accesses. The IDE data transfer speed for each device on each channel can be independently programmed allowing high speed IDE peripherals to co-exist on the same channel as older, compatible devices.

The IDE controller also provides a software accessible buffered reset signal to the IDE drive. The IDE_RESET# signal is driven low during reset to the CS5536 companion device and can be driven low or high as needed for device power off conditions.

2.4 Universal Serial Bus Controllers

The AMD Geode CS5536 companion device provides four USB 2.0 compliant ports that support low speed, full speed and high speed connections. All four ports are individually automatically associated with either the Open Host Controller Interface or the Enhanced Host Controller Interface depending on the attached device type.

Port 4 can be configured as a USB 2.0 high speed or full speed device. This device supports one control endpoint (EP0) and four further endpoints (EP1-EP4). These endpoints can be configured according to their direction, and support either control, bulk, or interrupt traffic.

There are two power control lines. Each port can be associated individually to one of them.

There is a common overcurrent sense line for all four ports. The ports can be enabled individually to react on an overcurrent event.

2.5 Audio Codec 97 (AC97) Controller

The audio subsection of the CS5536 companion device consists of three 32-bit stereo-buffered bus masters (two for output, one for input) and five 16-bit mono-buffered bus masters (three for output, two for input), whose function is to transport audio data between system memory and external AC97 codecs.

This arrangement is capable of producing multi-channel 5.1 surround sound (left, center, right, left rear, right rear, and low frequency effects).

The codec interface is AC97 v2.3 compliant and contains Serial In (x2), Serial Out, Sync Out, and Bit Clock, allowing support for any AC97 codec with Sample Rate Conversion (SRC). Additionally, the interface supports the industry-standard 16-bit pulse code modulated (PCM) format.

2.6 Diverse Device

A suite of 82xx devices provide all the legacy PC functionality required by most designs, including two programmable interrupt controllers (PICs), one Programmable Interval Timer (PIT) with three channels, and Direct Memory Access (DMA) functions. The CS5536 companion device contains eight Multi-Function General Purpose Timers (MFGPTs) that can be used for a variety of functions. A number of GPIOs are provided, and are assigned to system functions on power-up (i.e., LPC port). Each of these may be reassigned and given different I/O characteristics such as debounce, edge-triggering, etc.

The Diverse Integration Logic (DIVIL) holds the devices together and provides overall control and management via MSRs.

2.6.1 Legacy DMA Controller

The CS5536 companion device DMA controller consists of two cascaded 8237-type DMA controllers that together support four 8-bit channels. The DMA controller is used to provide high speed transfers between internal chip sources. It has full 32-bit address range support via high-page registers. An internal mapper allows routing of any of seven internal DMA sources to the four 8-bit DMA channels.

2.6.2 Programmable Interval Timer, Legacy Timer

The Programmable Interval Timer (PIT) generates programmable time intervals from the divided clock of an external clock input. The PIT is an 8254-style timer that contains three 16-bit independently programmable counters. A 14.318 MHz external clock signal (from a crystal oscillator or a clock chip) is divided by 12 to generate 1.19 MHz for the clocking reference of all three counters.

Downloaded from Arrow.com.

2.6.3 Programmable Interrupt Controller, Legacy Interrupt

The Programmable Interrupt Controller (PIC) consists of two 8259A-compatible programmable interrupt controllers connected in cascade mode through interrupt number two. Request mask capability and edge-level controls are provided for each of the 15 channels along with a 15-level priority controller.

An IRQ mapper takes up to 62 discrete interrupt request (IRQ) inputs and maps or masks them to the 15 PIC inputs and to one ASMI (asynchronous system management interrupt). All 62 inputs are individually maskable and status readable.

In addition to the above 8259A features, there are shadow registers to obtain the values of legacy 8259A registers that have not been historically readable.

2.6.4 Keyboard Emulation Logic, Legacy Support Interface

The PS2 Keyboard Emulation Logic (KEL) provides a virtual 8042 keyboard controller interface that may be used to map non-legacy keyboard and mouse sources to this traditional interface. Flexible keyboard emulation logic allows PS2 keyboard emulation traditionally used for USB legacy keyboard emulation. For example, USB sources may be 'connected' to this interface via SMM (System Management Mode) software. It also allows mixed environments with one LPC legacy device and one USB device.

2.6.5 Universal Asynchronous Receiver Transmitter and IR Port

Two Universal Asynchronous Receiver Transmitters (UARTs) provide a system interface to the industry standard serial interface consisting of the basic transmit and receive signals. One of the UARTs can be coupled with infrared logic and be connected to an infrared sensor.

The UARTs are both 16550 and 16450 software-compatible and contain shadow register support for write-only bit monitoring. The ports have data rates up to 115.2 kbps.

Serial Port 1 can be configured as an infrared communications port that supports Sharp-IR, Consumer-IR, and HP-SIR as well as many popular consumer remote-control protocols.

2.6.6 System Management Bus Controller

The System Management Bus (SMB) Controller provides a system interface to the industry standard SMB. The SMB allows easy interfacing to a wide range of low-cost memory and I/O devices, including: EEPROMs, SRAMs, timers, ADC, DAC, clock chips, and peripheral drivers. These lines are shared with two GPIOs and must be configured as SMB ports in order for this interface to be functional.

The SMB is a two-wire synchronous serial interface compatible with the System Management Bus physical layer. The SMB Controller can be configured as a bus master or slave, and can maintain bidirectional communication with both multiple master and slave devices. As a slave device, the SMB Controller may issue a request to become the bus master.

2.6.7 Low Pin Count Port

This port provides a system interface to the industry standard Low Pin Count (LPC) bus. The controller can convert an internal Local bus memory or I/O cycle to an external LPC cycle. It receives serial IRQs from the LPC and converts them to parallel form so they can be routed to the IRQ mapper. Lastly, it interacts with Legacy DMA logic to perform DMA between on-chip or off-chip DMA devices.

The LPC interface is based on Intel's Low Pin Count (LPC) Interface specification v1.0. In addition to the required signals/pins specified in the Intel specification, it also supports two optional signals:

- LPC_DRQ# - LPC DMA Request
- LPC_SERIRQ - LPC Serial encoded IRQ

The LPC interface supports memory, I/O, DMA, and Intel's firmware hub interfaces.

2.6.8 General Purpose I/Os with Input Conditioning Functions (ICF)

There are 32 GPIOs in the CS5536 companion device, 28 are externally available, offering a variety of user-selectable configurations including accessing auxiliary functions within the chip, and input conditioning such as debounce and edge detect. Register access is configured in such a way as to avoid Read-Modify-Write operations; each GPIO may be directly and independently configured.

Several groups of GPIOs are multiplexed between the LPC Controller, the SMB Controller, access to the UARTs and MFGPTs, and power management controls including system power and Sleep buttons. Six of the GPIOs are in the Standby power domain, giving them increased versatility as wakeup event sources when only Standby power is applied.

A GPIO interrupt and power management event (PME) mapper can map any subset of GPIOs to the PICs (eight interrupts available) or power management controller (eight events available).

Versatile input filtering is available for each GPIO input. Each preliminary input is optionally connected to a digital filter circuit that is optionally followed by an event counter. Lastly followed by an edge detector that together provide eight different ICFs (input conditioning functions), plus an auto-sense feature for determining the initial condition of the pin.

Downloaded from Arrow.com.

2.6.9 Multi-Function General Purpose Timers

This device contains eight Multi-Function General Purpose Timers (MFGPTs), six are in the normal V_{DD} Working power domain, while the other two are in the Standby power domain. The timers are very versatile and can be configured to provide a Watchdog timer (trigger GPIO output, interrupt or reset), perform Pulse Width Modulation (PWM) or Pulse Density Modulation (PDM), create Blink (low frequency pulse for LED), generate GPIO outputs, or act as general purpose timers.

Each MFGPT operates independently and has the following features:

- 32 KHz or 14.318 MHz clock selectable by software (applies to MFGPT0 to MFGPT5, in Working power domain, only).
- MFGPT6 and MFGPT7, in Standby power domain, use 32 KHz clock.
- Programmable input clock prescaler divisor to divide input clock by 2^i, where i = 0 to 15.
- Provide outputs for generating reset (limited to MFGPT0 to MFGPT5), IRQs, NMI, and ASMIs (indirectly through PICs).

2.6.10 Flash Interface

The CS5536 companion device has a Flash Interface that supports popular NOR Flash and inexpensive NAND Flash devices. This interface is shared with the IDE interface (IDE Controller), using the same balls. NOR or NAND Flash may co-exist with IDE devices using PIO (Programmed I/O) mode. The 8-bit interface supports up to four “lanes” of byte-wide Flash devices through use of four independent chip selects, and allows for booting from the array. Hardware support is present for SmartMedia-type ECC (Error Correction Code) calculations, off-loading software from having to support this task.

All four independent chip selects may be used as general purpose chip selects to support other ISA-like slave devices. Up to 1 KB of address space (without external latches) may be supported using these signals.

2.6.11 Real-Time Clock with CMOS RAM

The CS5536 companion device maintains a real-time clock for system use. The clock is powered by an external battery and so continues to keep accurate time even when system power is removed. The clock can be set to make automatic Daylight Savings Time changes in the spring and fall without user intervention. There are separate registers for seconds, minutes, hours, days (both day of the week and day of the month), months, and years. Alarms can be set for any time within the range of these registers, which have a 100-year capability. The clock uses an external 32 KHz oscillator or crystal as the timing element.

The same battery that keeps the clock continuously powered also provides power to a block of 242 bytes of CMOS RAM, used for storing non-volatile system parameters.

2.6.12 Power Management Controller

The CS5536 companion device has state-of-the-art power management capabilities designed into every module. Independent clock controls automatically turn clocks off to sections of the chip that are not being used, saving considerable power. In addition, the chip supports full Sleep and Wakeup states with multiple methods of inducement. A suite of external signals supports power management of devices on the system board. Legacy Power Management (PM), Advanced Power Management (APM), and Advanced Configuration and Power Interface (ACPI) techniques and requirements are supported. The GPIO device can be configured to transmit any of several wakeup events into the system.

The CS5536 companion device is divided into two main power domains: Working and Standby, plus circuits such as the real-time clock and CMOS RAM that are battery-backed. Most of the CS5536 is in the Working power domain, except for GPIO[31:24] and MFGPT[7:6]. This allows these signals to be used for wakeup events or output controls.

2.7 GeodeLink™ Interface Unit

The GeodeLink Interface Unit (GLIU) makes up the internal bus derived from the GeodeLink architecture. It has eight ports, one of which is dedicated to itself, leaving seven for use by internal GeodeLink Devices. Figure 1-1 on page 13 shows this device as the central element of the architecture, though its presence is basically transparent to the end user.

2.8 Low Voltage Detect

The Low Voltage Detect (LVD) circuit monitors Standby I/O voltage, Standby Core voltage, and Working Core voltage. Working I/O voltage is not monitored and is assumed to track with Working Core voltage. The LVD monitors these voltages to provide Working and Standby power-good signals (resets) for the respective working and standby power domains. Additionally, the PMC monitors the working power-good signal to shut-down and/or re-start the system as appropriate.

Downloaded from Arrow.com.

2.9 Processor Support

As previously stated, the AMD Geode CS5536 companion device is designed to interface with the AMD Geode LX processor. Figure 2-1 and Figure 2-2 on page 22 show typical block diagrams for mobile and single board computing systems based on the AMD Geode LX processor and CS5536 companion device.

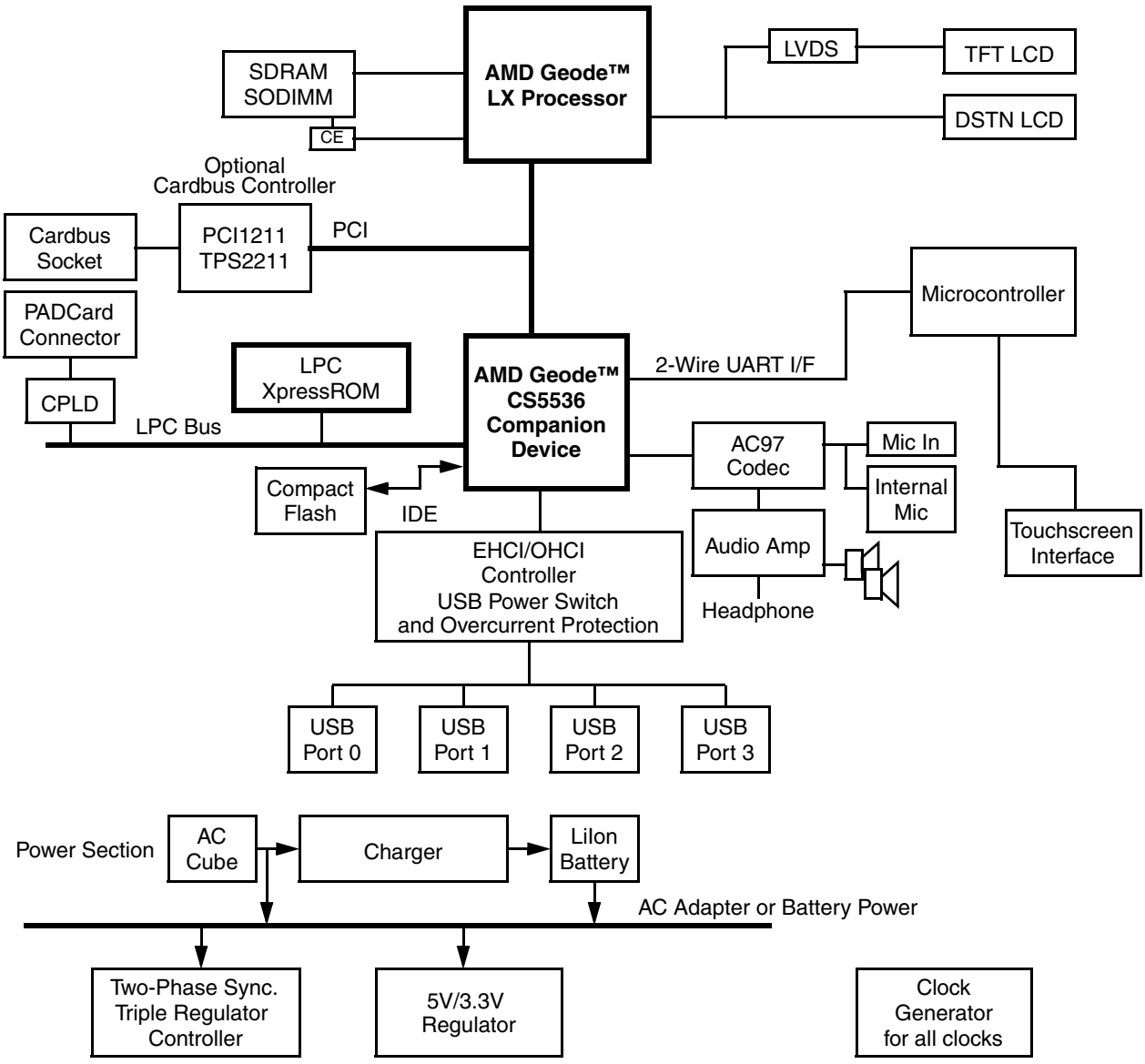

Figure 2-1. Mobile Computing System Block Diagram

Downloaded from Arrow.com.

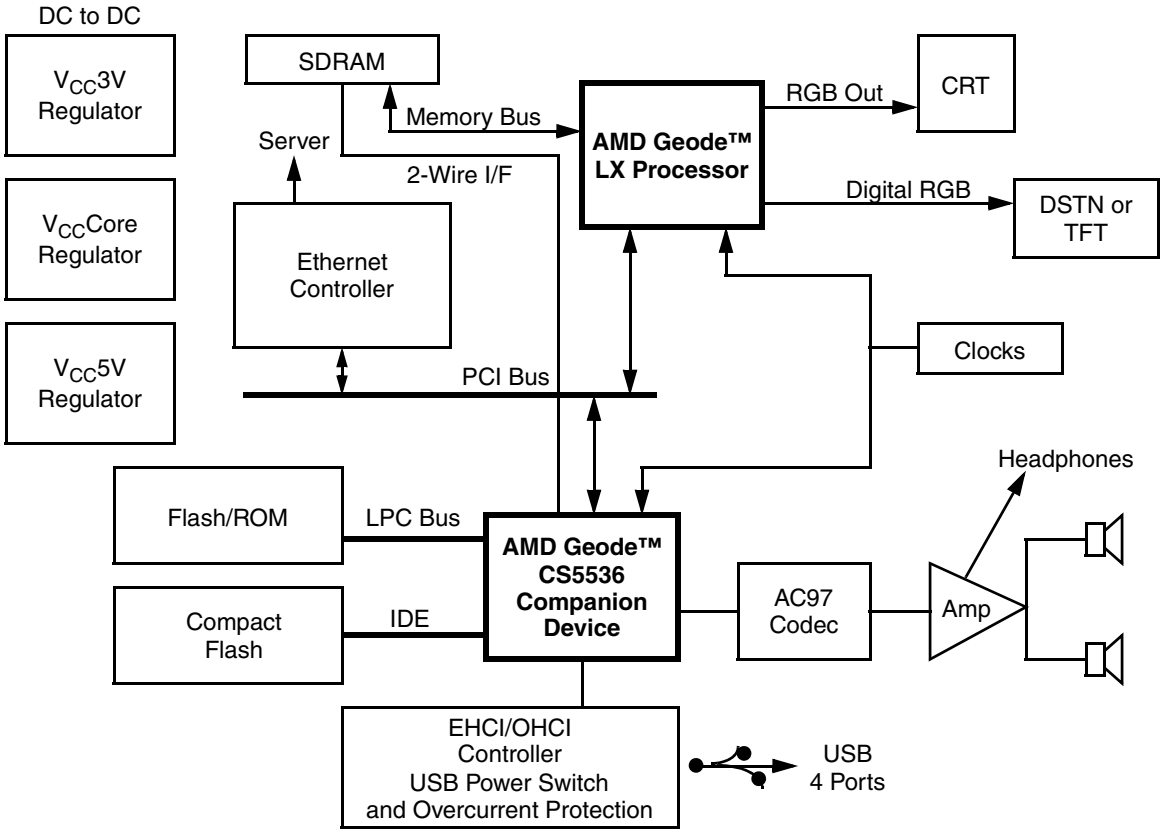

Figure 2-2. Single Board Computing System Block Diagram

Downloaded from Arrow.com.

3 Signal Definitions

This section defines the signals and describes the external interface of the AMD Geode™ CS5536 companion device. Signal multiplexing has been utilized to a high degree. For example, the IDE and Flash interfaces are multiplexed on the same balls. Configuration depends on the boot options selected (see Table 3-5 "Boot Options Selection" on page 34). If Flash is selected, the user has the option of using NOR and/or NAND Flash devices.

The GPIOs are configurable (e.g., any GPIO input can be mapped to an interrupt, ASMI, or PME). Figure 3-1 shows the signals organized in typical functional groups - not all possible multiplexing is shown.

Where signals are multiplexed, the primary signal name is listed first and is separated by a plus sign (+). A slash (/) in a signal name means that the function is always enabled and available (i.e., time multiplexed).

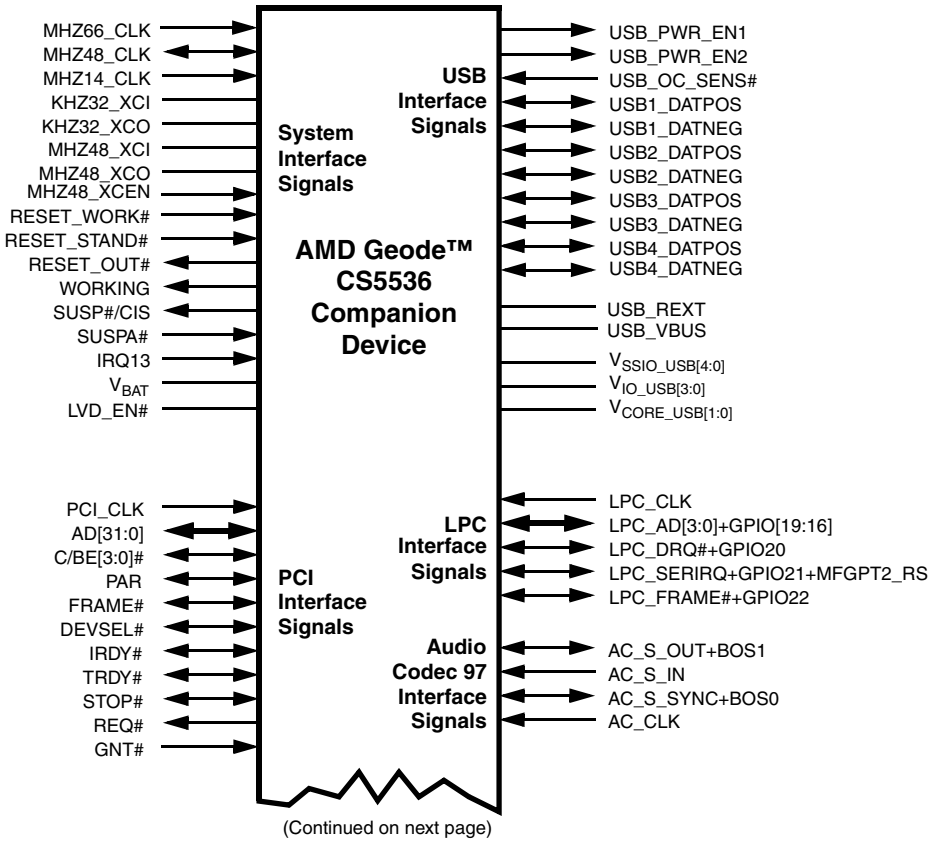

Note: ***Bold-italicized*** signal names in parenthesis denote a “recommended” use for a specific GPIO. See Table 3-8 "GPIO Options" on page 47 for additional details.

Figure 3-1. Typical Signal Groups

Downloaded from Arrow.com.

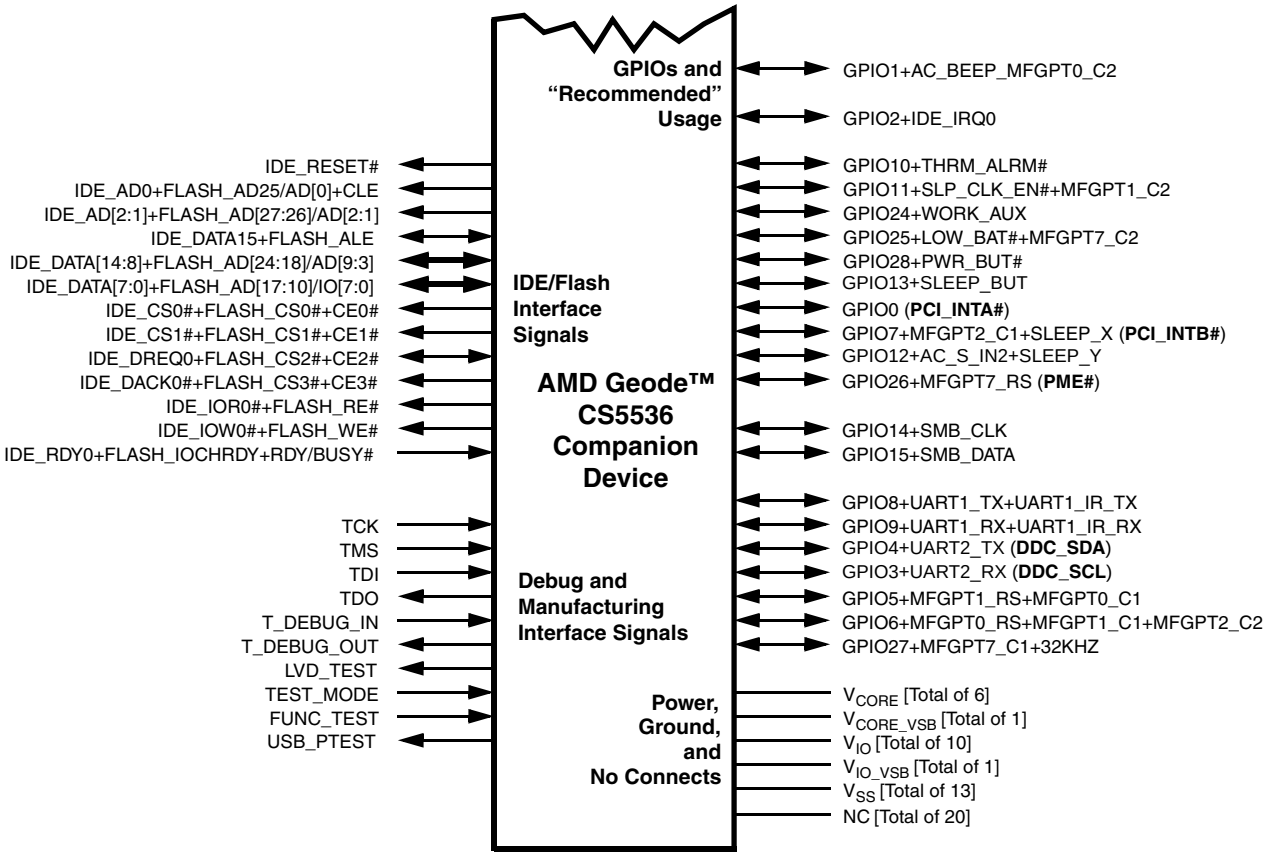

Note: ***Bold-italicized*** signal names in parenthesis denote a "recommended" use for a specific GPIO. See Table 3-8 "GPIO Options" on page 47 for additional details.

Figure 3-1. Typical Signal Groups (Continued)

Downloaded from Arrow.com.

3.1 Ball Assignments

As illustrated in Figure 3-1 on page 23, the CS5536 companion device is configurable. Boot options and register programming are used to set various modes of operation and specific signals on specific balls.

This section describes the ball assignments and interface options:

- Figure 3-2 "208-PBGA Ball Assignment Diagram" on page 26:
  — Top view looking through package.
- Table 3-2 "Ball Assignments: Sorted by Ball Number" on page 27:
  — Primary signal name is listed first.
  — Includes a column labeled *Buffer Type*. See Section 3.1.1 "Buffer Types" on page 33 for details.
  — Includes a column labeled *Configuration* with references to:
    – BOS[1:0] - See Section 3.1.2 "Boot Options" on page 34.
    – Ball Opt MSR - See Section 3.1.3 "Ball Options" on page 34.
    – IN_AUX1, OUT_AUX1, and OUT_AUX2 - See Section 3.2.8 "GPIOs" on page 47.
- Table 3-3 "Ball Assignments: Sorted Alphabetically by Signal Name" on page 31:
  — Quick-reference list, sorted alphabetically with primary signal listed first.

The tables in this section use several abbreviations. Table 3-1 lists the mnemonics and their meanings.

Table 3-1. Abbreviations/Definitions

Mnemonic	Definition
A	Analog
GND	Ground
I	Input
I/O	Bidirectional
O	Output
OD	Open-drain
Ball Opt MSR	Model Specific Register Ball Options: A register used to configure balls with multiple functions. Refer to Section 3.1.3 "Ball Options" on page 34 for further details.
PD	Pull-down resistor
PWR	Power
PU	Pull-up resistor
TS	TRI-STATE
V_{CORE}	Core Power Working Connection
V_{CORE_USB}	USB Core Power Connection
V_{CORE_VSB}	Core Power Standby Connection
V_{IO}	I/O Power Working Connection
V_{IO_USB}	USB I/O Power Connection
V_{IO_VSB}	I/O Power Standby Connection
V_{SS}	Ground
#	The “#” symbol at the end of a signal name indicates that the active, or asserted state occurs when the signal is at a low voltage level. When “#” is not present after the signal name, the signal is asserted when at a high voltage level.
/	A “/” in a signal name indicates the function is always enabled (i.e., time multiplexed - available when needed).
+	A “+” in a signal name indicates the function is available on the ball, but that either strapping options or register programming is required to select the desired function.

Downloaded from Arrow.com.

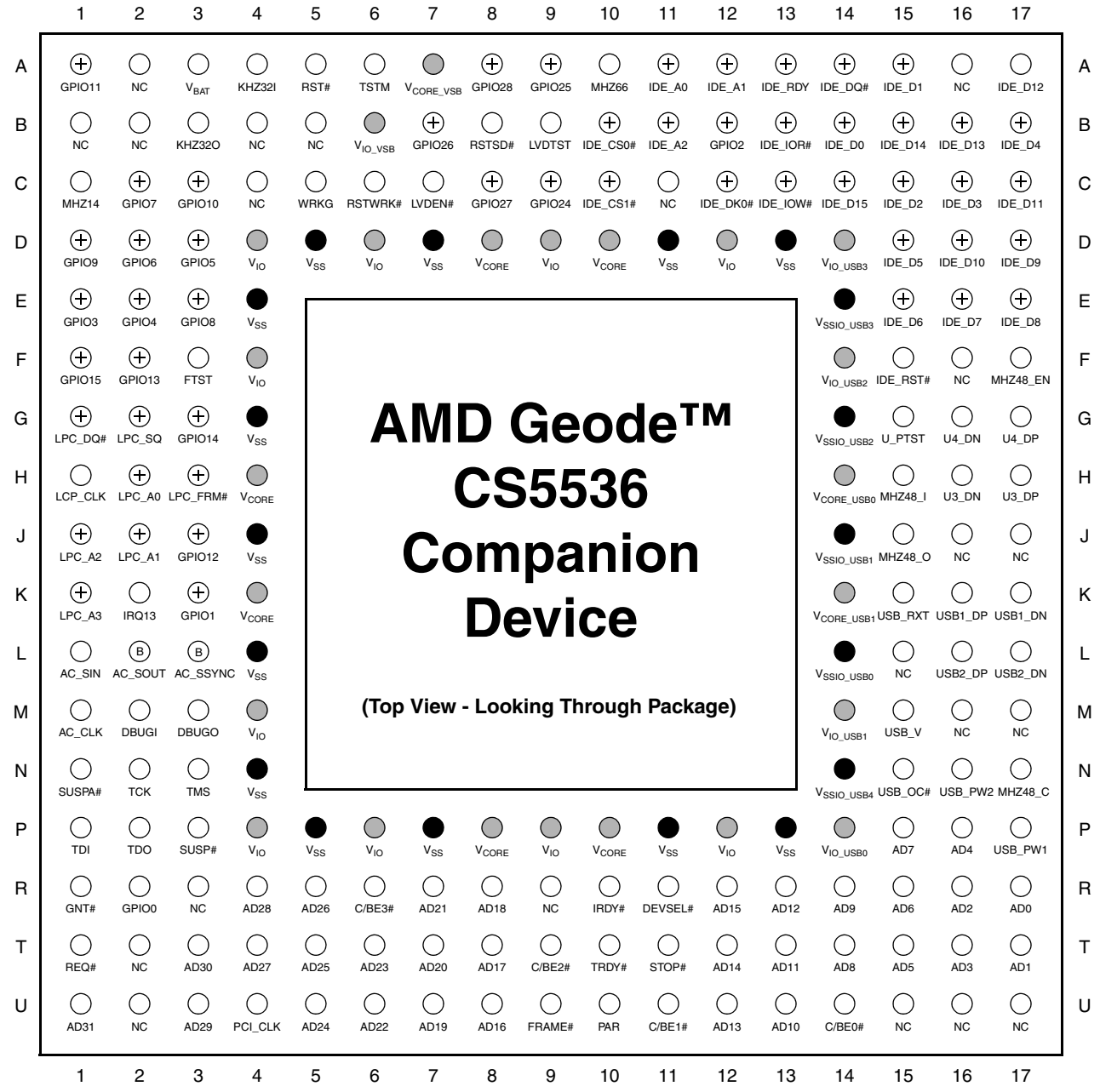

Note: Signal names have been abbreviated in this figure due to space constraints.

● = GND terminal
● = PWR terminal
⊕ = Multiplexed signal
Ⓑ = BOS (Boot Option Select)

Figure 3-2. 208-PBGA Ball Assignment Diagram

Downloaded from Arrow.com.

Table 3-2. Ball Assignments: Sorted by Ball Number

Ball No.	Signal Name (Note 1)	Type	Buffer Type (Note 2)	Configuration
A1	GPIO11	I/O	GP24	
	SLP_CLK_EN#	O		OUT_AUX1
	MFGPT1_C2	O		OUT_AUX2
A2	NC	---	---	
A3	V_{BAT}	Wire	Bare_Wire_BP	
A4	KHZ32_XCI	Wire	Bare_Wire	
A5	RESET_OUT#	O	GP24	
A6	TEST_MODE	Wire	Bare_Wire	
A7	V_{CORE_VSB}	PWR	---	
A8	GPIO28	I/O	GP24	
	PWR_BUT#	I		IN_AUX1
A9	GPIO25	I/O	GP24	
	LOW_BAT#	I		IN_AUX1
	MFGPT7_C2	O		OUT_AUX2
A10	MHZ66_CLK	I	GP24	
A11	IDE_AD0	O	IDE	BOS[1:0] = 00 or 11
	FLASH_AD25/AD0	O		BOS[1:0] = 10
	FLASH_CLE	O		
A12	IDE_AD1	O	IDE	BOS[1:0] = 00 or 11
	FLASH_AD26/AD1	O		BOS[1:0] = 10
A13	IDE_RDY0	I	IDE	BOS[1:0] = 00 or 11
	FLASH_IOCHRDY	I		BOS[1:0] = 10
	FLASH_RDY/BUSY#	I		
A14	IDE_DREQ0	I	IDE	BOS[1:0] = 00 or 11
	FLASH_CS2#	O		BOS[1:0] = 10
	FLASH_CE2#	O		
A15	IDE_DATA1	I/O	IDE	BOS[1:0] = 00 or 11
	FLASH_AD11/IO1	I/O		BOS[1:0] = 10
A16	NC	---	---	
A17	IDE_DATA12	I/O	IDE	BOS[1:0] = 00 or 11
	FLASH_AD22/AD7	O		BOS[1:0] = 10
B1	NC	---	---	
B2	NC	---	---	
B3	KHZ32_XCO	Wire	Bare_Wire	
B4	NC	---	---	
B5	NC	---	---	
B6	V_{IO_VSB}	PWR	---	
B7	GPIO26	I/O	GP24	
	MFGPT7_RS	I		IN_AUX1
B8	RESET_STAND#	I	Bare_Wire	
B9	LVD_TEST	Wire (O)	Bare_Wire	
B10	IDE_CS0#	O	IDE	BOS[1:0] = 00 or 11
	FLASH_CS0#	O		BOS[1:0] = 10
	FLASH_CE0#	O		
B11	IDE_AD2	O	IDE	BOS[1:0] = 00 or 11
	FLASH_AD27/AD2	O		BOS[1:0] = 10
B12	GPIO2	I/O	IDE	
	IDE_IRQ0	I		IN_AUX1
B13	IDE_IOR0#	O	IDE	BOS[1:0] = 00 or 11
	FLASH_RE#	O		BOS[1:0] = 10
B14	IDE_DATA0	I/O	IDE	BOS[1:0] = 00 or 11
	FLASH_AD10/IO0	I/O		BOS[1:0] = 10
B15	IDE_DATA14	I/O	IDE	BOS[1:0] = 00 or 11
	FLASH_AD24/AD9	O		BOS[1:0] = 10
B16	IDE_DATA13	I/O	IDE	BOS[1:0] = 00 or 11
	FLASH_AD23/AD8	O		BOS[1:0] = 10
B17	IDE_DATA4	I/O	IDE	BOS[1:0] = 00 or 11
	FLASH_AD14/IO4	I/O		BOS[1:0] = 10
C1	MHZ14_CLK	I	GP24	
C2	GPIO7	I/O	PCI	
	MFGPT2_C1	O		OUT_AUX1
	SLEEP_X	O		OUT_AUX2
C3	GPIO10	I/O	GP24	
	THRM_ALRM#	I		IN_AUX1
C4	NC	---	---	
C5	WORKING	O	SMB	
C6	RESET_WORK#	I	GP24	
C7	LVD_EN#	Wire	Bare_Wire	
C8	GPIO27	I/O	GP24	
	MFGPT7_C1	O		OUT_AUX1
	32KHZ	O		OUT_AUX2
C9	GPIO24	I/O	SMB	
	WORK_AUX	O		OUT_AUX1
C10	IDE_CS1#	O	IDE	BOS[1:0] = 00 or 11
	FLASH_CS1#	O		BOS[1:0] = 10
	FLASH_CE1#	O		
C11	NC	---	---	
C12	IDE_DACK0#	O	IDE	BOS[1:0] = 00 or 11
	FLASH_CS3#	O		BOS[1:0] = 10
	FLASH_CE3#	O		
C13	IDE_IOW0#	O	IDE	BOS[1:0] = 00 or 11
	FLASH_WE#	O		BOS[1:0] = 10
C14	IDE_DATA15	I/O	IDE	BOS[1:0] = 00 or 11
	FLASH_ALE	O		BOS[1:0] = 10
C15	IDE_DATA2	I/O	IDE	BOS[1:0] = 00 or 11
	FLASH_AD12/IO2	I/O		BOS[1:0] = 10
C16	IDE_DATA3	I/O	IDE	BOS[1:0] = 00 or 11
	FLASH_AD13/IO3	I/O		BOS[1:0] = 10
C17	IDE_DATA11	I/O	IDE	BOS[1:0] = 00 or 11
	FLASH_AD21/AD6	O		BOS[1:0] = 10

Downloaded from Arrow.com.

Table 3-2. Ball Assignments: Sorted by Ball Number (Continued)

Ball No.	Signal Name (Note 1)	Type	Buffer Type (Note 2)	Configuration
D1	GPIO9	I/O	GP24	
	UART1_RX	I		IN_AUX1
	UART1_IR_RX	I		
D2	GPIO6	I/O	GP24	
	MFGPT0_RS	I		IN_AUX1
	MFGPT1_C1	O		OUT_AUX1
	MFGPT2_C2	O		OUT_AUX2
D3	GPIO5	I/O	GP24	
	MFGPT1_RS	I		IN_AUX1
	MFGPT0_C1	O		OUT_AUX1
D4	V_{IO}	PWR	---	
D5	V_{SS}	GND	---	
D6	V_{IO}	PWR	---	
D7	V_{SS}	GND	---	
D8	V_{CORE}	PWR	---	
D9	V_{IO}	PWR	---	
D10	V_{CORE}	PWR	---	
D11	V_{SS}	GND	---	
D12	V_{IO}	PWR	---	
D13	V_{SS}	GND	---	
D14	V_{IO_USB3}	PWR	---	
D15	IDE_DATA5	I/O	IDE	BOS[1:0] = 00 or 11
	FLASH_AD15/IO5	I/O		BOS[1:0] = 10
D16	IDE_DATA10	I/O	IDE	BOS[1:0] = 00 or 11
	FLASH_AD20/AD5	O		BOS[1:0] = 10
D17	IDE_DATA9	I/O	IDE	BOS[1:0] = 00 or 11
	FLASH_AD19/AD4	O		BOS[1:0] = 10
E1	GPIO3	I/O	SMB	
	UART2_RX	I		IN_AUX1
E2	GPIO4	I/O	SMB	
	UART2_TX	O		OUT_AUX1
E3	GPIO8	I/O	GP24	
	UART1_TX	O		OUT_AUX1
	UART1_IR_TX	O		OUT_AUX2
E4	V_{SS}	GND	---	
E14	V_{SSIO_USB3}	GND	---	
E15	IDE_DATA6	I/O	IDE	BOS[1:0] = 00 or 11
	FLASH_AD16/IO6	I/O		BOS[1:0] = 10
E16	IDE_DATA7	I/O	IDE	BOS[1:0] = 00 or 11
	FLASH_AD17/IO7	I/O		BOS[1:0] = 10
E17	IDE_DATA8	I/O	IDE	BOS[1:0] = 00 or 11
	FLASH_AD18/AD3	O		BOS[1:0] = 10
F1	GPIO15	I/O	SMB	
	SMB_DATA	I/O		IN_AUX1 and OUT_AUX1
F2	GPIO13	I/O	GP24	
	SLEEP_BUT	I		IN_AUX1

Ball No.	Signal Name (Note 1)	Type	Buffer Type (Note 2)	Configuration
F3	FUNC_TEST	I	SMB	
F4	V_{IO}	PWR	---	
F14	V_{IO_USB2}	PWR	---	
F15	IDE_RESET#	O	IDE	
F16	NC	---	---	
F17	MHZ48_XCEN	I	GP24	
G1	LPC_DRQ#	I	PCI	Ball Opt MSR [6,4] = 1,1
	GPIO20	I/O		Ball Opt MSR [6] = 0
G2	LPC_SERIRQ	I/O	PCI	Ball Opt MSR [6,5] = 1,1
	GPIO21	I/O		Ball Opt MSR [6] = 0
	MFGPT2_RS	I		IN_AUX1
G3	GPIO14	I/O	SMB	
	SMB_CLK	I/O		IN_AUX1 and OUT_AUX1
G4	V_{SS}	GND	---	
G14	V_{SSIO_USB2}	GND	---	
G15	USB_PTEST	Wire	Bare_Wire	
G16	USB4_DATNEG	I/O	USB	
G17	USB4_DATPOS	I/O	USB	
H1	LPC_CLK	I	GP24	
H2	LPC_AD0	I/O	PCI	Ball Opt MSR [6] = 1
	GPIO16	I/O		Ball Opt MSR [6] = 0
H3	LPC_FRAME#	O	PCI	Ball Opt MSR [6] = 1
	GPIO22	I/O		Ball Opt MSR [6] = 0
H4	V_{CORE}	PWR	---	
H14	V_{CORE_USB0}	PWR	---	
H15	MHZ48_XCI	Wire	Bare_Wire	
H16	USB3_DATNEG	I/O	USB	
H17	USB3_DATPOS	I/O	USB	
J1	LPC_AD2	I/O	PCI	Ball Opt MSR [6] = 1
	GPIO18	I/O		Ball Opt MSR [6] = 0
J2	LPC_AD1	I/O	PCI	Ball Opt MSR [6] = 1
	GPIO17	I/O		Ball Opt MSR [6] = 0
J3	GPIO12	I/O	GP24	
	AC_S_IN2	I		IN_AUX1
	SLEEP_Y	O		OUT_AUX2
J4	V_{SS}	GND	---	
J14	V_{SSIO_USB1}	GND	---	
J15	MHZ48_XCO	Wire	Bare_Wire	
J16	NC	---	---	
J17	NC	---	---	

Downloaded from Arrow.com.

Table 3-2. Ball Assignments: Sorted by Ball Number (Continued)

Ball No.	Signal Name (Note 1)	Type	Buffer Type (Note 2)	Configuration
K1	LPC_AD3	I/O	PCI	Ball Opt MSR [6] = 1
	GPIO19	I/O		Ball Opt MSR [6] = 0
K2	IRQ13	I	GP24	
K3	GPIO1	I/O	GP24	Default
	AC_BEEP	O		OUT_AUX1
	MFGPT0_C2	O		OUT_AUX2
K4	V_{CORE}	PWR	---	
K14	V_{CORE_USB1}	PWR	---	
K15	USB_REXT	Wire	Bare_wire	
K16	USB1_DATPOS	I/O	USB	
K17	USB1_DATNEG	I/O	USB	
L1	AC_S_IN	I	GP24	
L2	AC_S_OUT	O	GP24	
	BOS1	I		
L3	AC_S_SYNC	O	GP24	
	BOS0	I		
L4	V_{SS}	GND	---	
L14	V_{SSIO_USB0}	GND	---	
L15	NC	---	---	
L16	USB2_DATPOS	I/O	USB	
L17	USB2_DATNEG	I/O	USB	
M1	AC_CLK	I	GP24	
M2	T_DEBUG_IN	I	GP24	
M3	T_DEBUG_OUT	O	GP24	
M4	V_{IO}	PWR	---	
M14	V_{IO_USB1}	PWR	---	
M15	USB_VBUS	Wire	Bare_Wire	
M16	NC	---	---	
M17	NC	---	---	
N1	SUSPA#	I	GP24	
N2	TCK	I	GP24	
N3	TMS	I	GP24	
N4	V_{SS}	GND	---	
N14	V_{SSIO_USB4}	GND	---	
N15	USB_OC_SENS#	I	GP24	
N16	USB_PWR_EN2	O	GP24	
N17	MHZ48_CLK	I/O	GP24	
P1	TDI	I	GP24	
P2	TDO	O, TS	GP24	
P3	SUSP#	O	GP24	
	CIS	O		
P4	V_{IO}	PWR	---	
P5	V_{SS}	GND	---	
P6	V_{IO}	PWR	---	
P7	V_{SS}	GND	---	
P8	V_{CORE}	PWR	---	
P9	V_{IO}	PWR	---	
P10	V_{CORE}	PWR	---	
P11	V_{SS}	GND	---	

Ball No.	Signal Name (Note 1)	Type	Buffer Type (Note 2)	Configuration
P12	V_{IO}	PWR	---	
P13	V_{SS}	GND	---	
P14	V_{IO_USB0}	PWR	---	
P15	AD7	I/O	PCI	
P16	AD4	I/O	PCI	
P17	USB_PWR_EN1	O	GP24	
R1	GNT#	I	PCI	
R2	GPIO0	I/O	PCI	
R3	NC	---	---	
R4	AD28	I/O	PCI	
R5	AD26	I/O	PCI	
R6	C/BE3#	I/O	PCI	
R7	AD21	I/O	PCI	
R8	AD18	I/O	PCI	
R9	NC	---	---	
R10	IRDY#	I/O	PCI	
R11	DEVSEL#	I/O	PCI	
R12	AD15	I/O	PCI	
R13	AD12	I/O	PCI	
R14	AD9	I/O	PCI	
R15	AD6	I/O	PCI	
R16	AD2	I/O	PCI	
R17	AD0	I/O	PCI	
T1	REQ#	O	PCI	
T2	NC	---	---	
T3	AD30	I/O	PCI	
T4	AD27	I/O	PCI	
T5	AD25	I/O	PCI	
T6	AD23	I/O	PCI	
T7	AD20	I/O	PCI	
T8	AD17	I/O	PCI	
T9	C/BE2#	I/O	PCI	
T10	TRDY#	I/O	PCI	
T11	STOP#	I/O	PCI	
T12	AD14	I/O	PCI	
T13	AD11	I/O	PCI	
T14	AD8	I/O	PCI	
T15	AD5	I/O	PCI	
T16	AD3	I/O	PCI	
T17	AD1	I/O	PCI	
U1	AD31	I/O	PCI	
U2	NC	---	---	
U3	AD29	I/O	PCI	
U4	PCI_CLK	I	GP24	
U5	AD24	I/O	PCI	
U6	AD22	I/O	PCI	
U7	AD19	I/O	PCI	
U8	AD16	I/O	PCI	
U9	FRAME#	I/O	PCI	
U10	PAR	I/O	PCI	
U11	C/BE1#	I/O	PCI	
U12	AD13	I/O	PCI	

Downloaded from Arrow.com.

Table 3-2. Ball Assignments: Sorted by Ball Number (Continued)

Ball No.	Signal Name (Note 1)	Type	Buffer Type (Note 2)	Configuration
U13	AD10	I/O	PCI	
U14	C/BE0#	I/O	PCI	

Ball No.	Signal Name (Note 1)	Type	Buffer Type (Note 2)	Configuration
U15	NC	---	---	
U16	NC	---	---	
U17	NC	---	---	

Note 1. The primary signal name is listed first.
Note 2. See Table 3-4 "Buffer Type Characteristics" on page 33 for buffer type definitions.

Downloaded from Arrow.com.

Table 3-3. Ball Assignments: Sorted Alphabetically by Signal Name

Signal Name	Ball No.
32KHZ	C8
AC_BEEP	K3
AC_CLK	M1
AC_S_IN	L1
AC_S_IN2	J3
AC_S_OUT	L2
AC_S_SYNC	L3
AD0	R17
AD1	T17
AD2	R16
AD3	T16
AD4	P16
AD5	T15
AD6	R15
AD7	P15
AD8	T14
AD9	R14
AD10	U13
AD11	T13
AD12	R13
AD13	U12
AD14	T12
AD15	R12
AD16	U8
AD17	T8
AD18	R8
AD19	U7
AD20	T7
AD21	R7
AD22	U6
AD23	T6
AD24	U5
AD25	T5
AD26	R5
AD27	T4
AD28	R4
AD29	U3
AD30	T3
AD31	U1
BOS0	L3
BOS1	L2
C/BE0#	U14
C/BE1#	U11
C/BE2#	T9
C/BE3#	R6
CIS	P3
DEVSEL#	R11
FLASH_AD10/IO0	B14
FLASH_AD11/IO1	A15
FLASH_AD12/IO2	C15
FLASH_AD13/IO3	C16
FLASH_AD14/IO4	B17
FLASH_AD15/IO5	D15
FLASH_AD16/IO6	E15
FLASH_AD17/IO7	E16
FLASH_AD18/AD3	E17
FLASH_AD19/AD4	D17
FLASH_AD20/AD5	D16
FLASH_AD21/AD6	C17
FLASH_AD22/AD7	A17
FLASH_AD23/AD8	B16
FLASH_AD24/AD9	B15
FLASH_AD25/AD0	A11
FLASH_AD26/AD1	A12
FLASH_AD27/AD2	B11
FLASH_ALE	C14
FLASH_CE0#	B10
FLASH_CE1#	C10
FLASH_CE2#	A14
FLASH_CE3#	C12
FLASH_CLE	A11
FLASH_CS0#	B10
FLASH_CS1#	C10
FLASH_CS2#	A14
FLASH_CS3#	C12
FLASH_IOCHRDY	A13
FLASH_RDY/ BUSY#	A13
FLASH_RE#	B13
FLASH_WE#	C13
FRAME#	U9
FUNC_TEST	F3
GNT#	R1
GPIO0	R2
GPIO1	K3
GPIO2	B12
GPIO3	E1
GPIO4	E2
GPIO5	D3
GPIO6	D2
GPIO7	C2
GPIO8	E3
GPIO9	D1
GPIO10	C3
GPIO11	A1
GPIO12	J3
GPIO13	F2
GPIO14	G3
GPIO15	F1
GPIO16	H2
GPIO17	J2
GPIO18	J1
GPIO19	K1
GPIO20	G1
GPIO21	G2
GPIO22	H3
GPIO24	C9
GPIO25	A9
GPIO26	B7
GPIO27	C8
GPIO28	A8
IDE_AD0	A11
IDE_AD1	A12
IDE_AD2	B11
IDE_CS0#	B10
IDE_CS1#	C10
IDE_DACK0#	C12
IDE_DATA0	B14
IDE_DATA1	A15
IDE_DATA2	C15
IDE_DATA3	C16
IDE_DATA4	B17
IDE_DATA5	D15
IDE_DATA6	E15
IDE_DATA7	E16
IDE_DATA8	E17
IDE_DATA9	D17
IDE_DATA10	D16
IDE_DATA11	C17
IDE_DATA12	A17
IDE_DATA13	B16
IDE_DATA14	B15
IDE_DATA15	C14
IDE_DREQ0	A14
IDE_IOR0#	B13
IDE_IOW0#	C13
IDE_IRQ0	B12
IDE_RDY0	A13
IDE_RESET#	F15
IRDY#	R10
IRQ13	K2
KHZ32_XCI	A4
KHZ32_XCO	B3
LOW_BAT#	A9
LPC_AD0	H2
LPC_AD1	J2
LPC_AD2	J1
LPC_AD3	K1
LPC_CLK	H1
LPC_DRQ#	G1
LPC_FRAME#	H3
LPC_SERIRQ	G2
LVD_EN#	C7
LVD_TEST	B9
MFGPT0_C1	D3
MFGPT0_C2	K3
MFGPT0_RS	D2
MFGPT1_C1	D2
MFGPT1_C2	A1
MFGPT1_RS	D3
MFGPT2_C1	C2
MFGPT2_C2	D2
MFGPT2_RS	G2
MFGPT7_C1	C8
MFGPT7_C2	A9
MFGPT7_RS	B7
MHZ14_CLK	C1
MHZ48_CLK	N17
MHZ48_XCEN	F17
MHZ48_XCI	H15
MHZ48_XCO	J15
MHZ66_CLK	A10
NC (Total of 21)	A2, A16, B1, B2, B4, B5, C4, C11, F16, J16, J17, L15, M16, M17, R3, R9, T2, U2, U15, U16, U17
PAR	U10
PCI_CLK	U4
PWR_BUT#	A8
REQ#	T1
RESET_OUT#	A5
RESET_STAND#	B8
RESET_WORK#	C6
SLEEP_BUT	F2
SLEEP_X	C2
SLEEP_Y	J3
SLP_CLK_EN#	A1
SMB_CLK	G3
SMB_DATA	F1
STOP#	T11
SUSP#	P3
SUSPA#	N1
T_DEBUG_IN	M2
T_DEBUG_OUT	M3
TCK	N2
TDI	P1
TDO	P2
TEST_MODE	A6
THRM_ALRM#	C3
TMS	N3
TRDY#	T10
UART1_IR_RX	D1

Downloaded from Arrow.com.

Table 3-3. Ball Assignments: Sorted Alphabetically by Signal Name (Continued)

Signal Name	Ball No.
UART1_IR_TX	E3
UART1_RX	D1
UART1_TX	E3
UART2_RX	E1
UART2_TX	E2
USB_OC_SENS#	N15
USB_PWR_EN1	P17
USB_PWR_EN2	N16
USB1_DATNEG	K17
USB1_DATPOS	K16
USB2_DATNEG	L17
USB2_DATPOS	L16
USB3_DATNEG	H16
USB3_DATPOS	H17
USB4_DATNEG	G16
USB4_DATPOS	G17
USB_PTEST	G15
USB_REXT	K15
USB_VBUS	M15

Signal Name	Ball No.
V_{BAT}	A3
V_{CORE} (Total of 6)	D8, D10, H4, K4, P8, P10
V_{CORE_VSB}	A7
V_{CORE_USB0}	H14
V_{CORE_USB1}	K14
V_{IO_USB0}	P14
V_{IO_USB1}	M14
V_{IO_USB2}	F14
V_{IO_USB3}	D14

Signal Name	Ball No.
V_{IO} (Total of 10)	D4, D6, D9, D12, F4, M4, P4, P6, P9, P12
V_{IO_VSB}	B6
V_{SS} (Total of 13)	D5, D7, D11, D13, E4, G4, J4, L4, N4, P5, P7, P11, P13
V_{SSIO_USB0}	L14
V_{SSIO_USB1}	J14

Signal Name	Ball No.
V_{SSIO_USB2}	G14
V_{SSIO_USB3}	E14
V_{SSIO_USB4}	N14
WORK_AUX	C9
WORKING	C5

Downloaded from Arrow.com.

3.1.1 Buffer Types

Table 3-2 "Ball Assignments: Sorted by Ball Number" on page 27 includes a column labeled “Buffer Type”. The details of each buffer type listed in this column are given in Table 3-4. The column headings in Table 3-4 are identified as follows:

TS: Indicates whether the buffer may be put into the TRI-STATE mode. Note that some pins having buffer types that allow TRI-STATE may never actually enter the TRI-STATE mode in practice, since they may be inputs or provide other signals that are always driven. To determine if a particular signal can be put in the TRI-STATE mode, consult the individual signal descriptions in Section 3.2 "Signal Descriptions" on page 36.

OD: Indicates if the buffer is open-drain, or not. Open-drain outputs may be wire ORed together and require a discrete pull-up resistor to operate properly.

5VT: Indicates if the buffer is 5-volt tolerant, or not. If it is 5-volt tolerant, then 5 volt TTL signals may be safely applied to this pin.

Backdrive Protected: Indicates that the buffer may have active signals applied even when the CS5536 companion device itself is powered down.

PU/PD: Indicates if an internal, programmable pull-up or pull-down resistor may be present.

Current High/Low (mA): This column gives the current source/sink capacities when the voltage at the pin is high, and low. The high and low values are separated by a “/” and values given are in milli-amps (mA).

Rise/Fall @ Load: This column indicates the rise and fall times for the different buffer types at the load capacitance indicated. These measurements are given in two ways: rise/fall time between the 20%-80% voltage levels, or, the rate of change the buffer is capable of, in volts-per-nano-second (V/ns). See Section 7.3 "AC Characteristics" on page 580 for details.

Note the presence of several “wire” type buffers in this table. Signals identified as one of the wire-types are not driven by a buffer, hence no rise/fall time or other measurements are given; these are marked “NA” in Table 3-4. The wire-type connection indicates a direct connection to internal circuits such as power, ground, and analog signals.

Table 3-4. Buffer Type Characteristics

Name	TS	OD	5VT	Backdrive Protected	PU/PD	Current High/Low (mA)	Rise/Fall @ Load
GP24	X				X	24/24	Max: 4 ns @ 50 pF
PCI (Note 1)	X					0.5/1.5	Max: 4 V/ns @ 10 pF Min: 1 V/ns @ 10 pF
IDE	X		X			6/6	Max: 1.0 V/ns @ 40 pF Min: 0.4 V/ns @ 40 pF
SMB		X	X	X			Rise Max: 1 µs @ 400 pF Fall Max: 300 ns @ 400 pF
USB	Low-voltage differential-signal I/O buffer (Note 2)						
Bare_Wire	NA	NA			NA	NA	NA
Bare_Wire_BP	NA	NA		X	NA	NA	NA

Note 1. The PCI buffer type does not incorporate a clamping diode to V_{IO}, however, the buffer circuitry provides the electrical device protection as required by the PCI Local Bus Specification, Revision 2.3.

Note 2. For the electrical characteristics of the USB low-voltage differential-signal I/O buffer, see the USB Specification, Revision 2.0.

Downloaded from Arrow.com.

3.1.2 Boot Options

Two balls on the device, L2 and L3, the Boot Options Select balls (BOS[1:0]), serve to specify the location of the boot device as the system undergoes a full reset. Since boot devices may reside in Flash or on an IDE device, the IDE/Flash interface is automatically selected as operating in one of the two modes by the Boot Options. After Reset, the function of these interfaces may be changed with the Ball Options MSR (see Section 3.1.3 "Ball Options"). Both these balls are multiplexed with other functions (as identified in Section 3.2.7 "Audio Codec 97 Interface" on page 46) and function as BOS[1:0] only when RESET_OUT# is asserted. Table 3-5 indicates how these two balls should be configured to select the desired boot device. Both balls contain an internal pull-up, active only during reset, so if a ball is required to be high during this time, it may be left unconnected. If a ball is desired to be low during reset, a pull-down (i.e., not a hard tie to ground) should be added. During reset, both balls' output drivers are in the TRI-STATE mode.

3.1.3 Ball Options

Table 3-6 shows the Ball Options MSR (DIVIL MSR 51400015h), through which the function of certain groups of multiplexed balls may be dynamically changed after the reset period ends. Specifically, the functions LPC/GPIO and IDE/Flash groups are selected, and certain individual balls, as specified in the MSR, are controlled.

Table 3-5. Boot Options Selection

BOS1 (Ball L2)	BOS0 (Ball L3)	Description
0	0	**Boot from Memory Device on the LPC Bus.** IDE pins come up connected to IDE Controller (see Section 3.2.3 "IDE/Flash Interface Signals" on page 40 and Table 3-6 "DIVIL_BALL_OPT (DIVIL MSR 51400015h)").
0	1	**Reserved.**
1	0	**Boot from NOR Flash on the IDE Bus.** IDE pins come up connected to Flash Controller (see Section 3.2.3 "IDE/Flash Interface Signals" on page 40 and Table 3-6 "DIVIL_BALL_OPT (DIVIL MSR 51400015h)"). NOR Flash, ROM, or other random access devices must be connected to "FLASH_CS_3".
1	1	**Boot from Firmware Hub on the LPC Bus.** IDE pins come up connected to IDE Controller (see Section 3.2.3 "IDE/Flash Interface Signals" on page 40 and Table 3-6 "DIVIL_BALL_OPT (DIVIL MSR 51400015h)").

Table 3-6. DIVIL_BALL_OPT (DIVIL MSR 51400015h)

Bit	Name	Description
31:12	RSVD	**Reserved.** Reads always return 0. Writes have no effect; by convention, always write 0.
11:10	SEC_BOOT_LOC	**Secondary Boot Location.** Determines which chip select asserts for addresses in the range F00F0000h to F00F3FFFh. Defaults to the same value as boot option: 00: LPC ROM. 01: Reserved. 10: Flash. 11: FirmWare Hub.
9:8	BOOT_OP_ LATCHED (RO)	**Latched Value of Boot Option (Read Only).** For values, see Table 3-5 "Boot Options Selection".
7	RSVD	**Reserved.** Reads return value written. By convention, always write 0. Defaults low.

Downloaded from Arrow.com.

Table 3-6. DIVIL_BALL_OPT (DIVIL MSR 51400015h) (Continued)

Bit	Name	Description
6	PIN_OPT_LALL	**All LPC Pin Option Selection.** 0: All LPC pins become GPIOs including LPC_DRQ# and LPC_SERIRQ. Ball H3 functions as GPIO22 Ball H2 functions as GPIO16 Ball J2 functions as GPIO17 Ball J1 functions as GPIO18 Ball K1 functions as GPIO19 Ball G1 functions as GPIO20 Ball G2 functions as GPIO21 1: All LPC pins are controlled by the LPC controller except LPC_DRQ# and LPC_SERIRQ. Their use is determined by bits [5:4]. **(Default)** Ball H3 functions as LPC_FRAME# Ball H2 functions as LPC_AD0 Ball J2 functions as LPC_AD1 Ball J1 functions as LPC_AD2 Ball K1 functions as LPC_AD3 When this bit is low, there is an implied high for the LPC_DISABLE_MEM and LPC_DISABLE_IO bits in DIVIL_LEG_IO (DIVIL MSR 51400014h[25:24]).
5	PIN_OPT_LIRQ	**LPC_SERIRQ or GPIO21 Pin Option Selection.** 0: Ball G2 is GPIO21. 1: Ball G2 functions as LPC_SERIRQ. **(Default)**
4	PIN_OPT_LDRQ	**LPC_DRQ# or GPIO20 Pin Option Selection.** 0: Ball G1 is GPIO20. 1: Ball G2 functions as LPC_DRQ#. **(Default)**
3:2	PRI_BOOT_LOC [1:0]	**Primary Boot Location.** Determines which chip select asserts for addresses at or above F0000000h, except those in the range specified by SEC_BOOT_LOC (bits [11:10]). Defaults to the same value as boot option. 00: LPC ROM. 01: Reserved. 10: Flash. 11: FirmWare Hub.
1	RSVD	**Reserved.** Reads return value written. By convention, always write 0. Defaults low.
0	PIN_OPT_IDE	**IDE or Flash Controller Pin Function Selection.** 0: All IDE pins associated with Flash Controller. Default if BOS[1:0] = 10. 1: All IDE pins associated with IDE Controller. Default if BOS[1:0] = 00 or 11. IDE_IRQ0 is multiplexed with GPIO2; therefore, this bit has no affect with regards to programming IDE_IRQ0. See Table 3-5 "Boot Options Selection" for BOS[1:0] programming values.

Downloaded from Arrow.com.

3.2 Signal Descriptions

3.2.1 System Interface Signals

Signal Name	Ball No.	Type	Description
MHZ66_CLK	A10	I	**66 MHz Clock.** This is the main system clock. It is also used by the IDE interface.
MHZ48_CLK	N17	I/O	**USB Clock.** The 48 MHz clock for the UARTs and SMB Controller. If MHZ48_XCEN is high, this pin can be used as output of the 48 MHz clock generated by the crystal on MHZ48_XCI and MHZ48_XCO.
MHZ14_CLK	C1	I	**14.31818 MHz Timer Clock.** The input clock for power management functions and the Programmable Interval Timer (PIT).
KHZ32_XCI	A4	Wire	**32 KHz Input.** This input is used for the real-time clock (RTC), GPIOs, MFGPTs, and power management functions. This input may come from either an external oscillator or one side of a 32.768 KHz crystal. If an external oscillator is used, it should be powered by V_{IO_VSB}. This signal takes approximately one second to lock after power-up.
KHZ32_XCO	B3	Wire	**32 KHz Input 2.** This input is to be connected to the other side of the crystal oscillator connected to KHZ32_XCI, if used. Leave open (not connected) if an oscillator (not a crystal) is connected to KHZ32_XCI.
MHZ48_XCI	H15	Wire	**48 MHz Input.** This input is used for USB, the UARTs and SMB controller if MHZ48_XCEN is high. This pin is connected to one side of the crystal. Tie this signal to ground if MHZ48_XCEN is low. If used for High Speed Mode, connect these pins to a 48 MHz fundamental frequency crystal.
MHZ48_XCO	J15	Wire	**48 MHz Input 2.** This input is to be connected to the other side of the crystal oscillator connected to MHZ48_XCI, if used. Leave open (not connected) if MHZ48_XCEN is low. If used for High Speed Mode, connect these pins to a 48 MHz fundamental frequency crystal.
MHZ48_XCEN	F17	Wire	**48 MHz Input Control.** This input controls if the crystal on MHZ48_XCI and MHZ48_XCO or MHZ48_CLK is used as clock for the UARTS, USB and SMB Controller. If high the crystal inputs are used.
RESET_WORK#	C6	I	**Reset Working Power Domain.** This signal, when asserted, is the master reset for all CS5536 interfaces that are in the Working power domain. See Section 4.8.1 "Power Domains" on page 80 for a description of the Working power domain. RESET_WORK# must be asserted for at least 10 ns in order to be properly recognized. If LVD_EN# is enabled (tied low), use of this input is not required. See the LVD_EN# discussion in this table.
RESET_STAND#	B8	I	**Reset Standby Power Domain.** This signal, when asserted, is the master reset for all CS5536 interfaces that are in the Standby power domain. See Section 4.8.1 "Power Domains" on page 80 for a description of the Working power domain. If LVD_EN# is enabled (tied low), use of this input is not required. See the LVD_EN# discussion in this table. Tie directly to V_{IO_VSB} if not used.

Downloaded from Arrow.com.

3.2.1 System Interface Signals (Continued)

Signal Name	Ball No.	Type	Description
RESET_OUT#	A5	O	**Reset Output.** This is the main system reset signal. RESET_OUT# is de-asserted synchronously with the low-to-high edge of PCI_CLK. The de-assertion is delayed from internal *reset* by up to 32 seconds, with an 8 ms default value, using a programmable counter driven by the 32 KHz clock. Note this counter default is established by RESET_STAND# and is not affected by RESET_WORK#. Therefore, the delay value may be changed and the system reset with the new value.
WORKING	C5	O	**Working State.** When high, indicates the chip is in the Working state. This signal is intended to be used to control power to off-chip devices in a system. Open-drain. External pull-up required.
SUSP#	P3	O	**Suspend.** This signal goes low in response to events as determined by the power management logic. It requests the AMD Geode™ LX processor to enter the Suspend state. This is the default state for this ball at reset. Not used in normal operation.
CIS		O	**CPU Interface Serial.** A 20-bit serial status word is output on this ball, synchronized to PCI_CLK. Data changes on the rising edge and is stable on the falling edge of PCI_CLK. This WORD is output whenever one of the internally-monitored signals changes states. See Section 5.2.14 "CPU Interface Serial (CIS)" on page 86 for details. Used in normal operation.
SUSPA#	N1	I	**Suspend Acknowledge.** This input signal is driven low by the AMD Geode LX processor when it has successfully entered the Suspend state.
IRQ13	K2	I	**Interrupt Request Level 13.** Floating Point error. Connect directly to IRQ13 of the AMD Geode LX processor.
V_{BAT}	A3	Wire	**Real-Time Clock Battery Back-Up.** Battery voltage on this ball keeps the real-time clock and CMOS RAM circuits continuously powered. If not used, tie to ground. This ball incorporates a reverse bias protection diode on-chip. There is no need for an external diode.
LVD_EN#	C7	Wire	**Low Voltage Detect Enable.** LVD_EN# enables/disables the on-chip low voltage detection circuit. When disabled, the external subsystem must assert RESET_STAND# as Standby power is applied and must assert RESET_WORK# as Working power is applied. When LVD is enabled, use of these two resets is optional. Generally, RESET_STAND# would be tied high (not used) while RESET_WORK# would be tied to a reset output that is typically available from the power supply. However, a system could just have a simple regulator circuit and also tie RESET_WORK# high. Tie to V_{SS} to enable. Tie to V_{IO_VSB} to disable.

Downloaded from Arrow.com.

3.2.2 PCI Interface Signals

Signal Name (Note 1)	Ball No.	Type	Description
PCI_CLK	U4	I	**PCI Clock.** 33 or 66 MHz.
AD[31:0]	U1, T3, U3, R4, T4, R5, T5, U5, T6, U6, R7, T7, U7, R8, T8, U8, R12, T12, U12, R13, T13, U13, R14, T14, P15, R15, T15, P16, T16, R16, T17, R17	I/O	**PCI Address/Data.** AD[31:0] is a physical address during the first clock of a PCI transaction; it is the data during subsequent clocks. When the CS5536 is a PCI master, AD[31:0] are outputs during the address and write data phases, and are inputs during the read data phase of a transaction. When the CS5536 is a PCI slave, AD[31:0] are inputs during the address and write data phases, and are outputs during the read data phase of a transaction.
C/BE[3:0]#	R6, T9, U11, U14	I/O	**PCI Bus Command and Byte Enables.** During the address phase of a PCI transaction, when FRAME# is active, C/BE[3:0]# define the bus command. During the data phase of a transaction, C/BE[3:0]# are the data byte enables. C/BE[3:0]# are outputs when the CS5536 is a PCI master and inputs when it is a PCI slave.
PAR	U10	I/O	**PCI Parity.** PAR is the parity signal driven to maintain even parity across AD[31:0] and C/BE[3:0]#. The CS5536 drives PAR one clock after the address phase and one clock after each completed data phase of write transactions as a PCI master. It also drives PAR one clock after each completed data phase of read transactions as a PCI slave.
FRAME#	U9	I/O	**PCI Cycle Frame.** FRAME# is asserted to indicate the start and duration of a transaction. It is de-asserted on the final data phase. FRAME# is an input when the CS5536 is a PCI slave. Normally connected to a 10k to 15k ohm external pull-up. This signal is in TRI-STATE mode after reset.
DEVSEL#	R11	I/O	**PCI Device Select.** DEVSEL# is asserted by a PCI slave to indicate to a PCI master and subtractive decoder that it is the target of the current transaction. As an input, DEVSEL# indicates a PCI slave has responded to the current address. As an output, DEVSEL# is asserted one cycle after the assertion of FRAME# and remains asserted to the end of a transaction as the result of a positive decode. DEVSEL# is asserted four cycles after the assertion of FRAME# if DEVSEL# has not been asserted by another PCI device when the CS5536 is programmed to be the subtractive decode agent. Normally connected to a 10k to 15k ohm external pull-up. This signal is in TRI-STATE mode after reset.

Downloaded from Arrow.com.

3.2.2 PCI Interface Signals (Continued)

Signal Name (Note 1)	Ball No.	Type	Description
IRDY#	R10	I/O	**PCI Initiator Ready.** IRDY# is driven by the master to indicate valid data on a write transaction, or that it is ready to receive data on a read transaction. When the CS5536 is a PCI slave, IRDY# is an input that can delay the beginning of a write transaction or the completion of a read transaction. Wait cycles are inserted until both IRDY# and TRDY# are asserted together. Normally connected to a 10k to 15k ohm external pull-up. This signal is in TRI-STATE mode after reset.
TRDY#	T10	I/O	**PCI Target Ready.** TRDY# is asserted by a PCI slave to indicate it is ready to complete the current data transfer. TRDY# is an input that indicates a PCI slave has driven valid data on a read or a PCI slave is ready to accept data from the CS5536 on a write. TRDY# is an output that indicates the CS5536 has placed valid data on AD[31:0] during a read or is ready to accept the data from a PCI master on a write. Wait cycles are inserted until both IRDY# and TRDY# are asserted together. Normally connected to a 10k to 15k ohm external pull-up. This signal is in TRI-STATE mode after reset.
STOP#	T11	I/O	**PCI Stop.** As an input, STOP# indicates that a PCI slave wants to terminate the current transfer. The transfer is either aborted or retried. STOP# is also used to end a burst. As an output, STOP# is asserted with TRDY# to indicate a target disconnect, or without TRDY# to indicate a target retry. The CS5536 asserts STOP# during any cache line crossings if in single transfer DMA mode or if busy. Normally connected to a 10k to 15k ohm external pull-up. This signal is in TRI-STATE mode after reset.
REQ#	T1	O	**PCI Bus Request.** The CS5536 asserts REQ# to gain ownership of the PCI bus. The REQ# and GNT# signals are used to arbitrate for the PCI bus. REQ# should connect to the REQ2# of the AMD Geode LX processor and function as the highest-priority PCI master.
GNT#	R1	I	**PCI Bus Grant.** GNT# is asserted by an arbiter that indicates to the CS5536 that access to the PCI bus has been granted. GNT# should connect to GNT2# of the AMD Geode LX processor and function as the highest-priority PCI master.

Note 1. Use RESET_OUT# for PCI reset.
For SMI, PME, INTA#, and INTB# functions, see Table 3-8 "GPIO Options" on page 47.

Downloaded from Arrow.com.

3.2.3 IDE/Flash Interface Signals

The IDE and Flash interface signals are multiplexed together on the same balls as shown in Table 3-7. Section 3.2.3.1 provides the names and functions of these signals when the interface is in the IDE mode and Section 3.2.3.2 when in Flash mode (NOR Flash/GPCS and NAND Flash modes).

Table 3-7. IDE and Flash Ball Multiplexing

Ball No.	IDE Mode	NOR Flash/GPCS Mode		NAND Flash Mode
		Address Phase	Data Phase	
B11, A12	IDE_AD[2:1]	FLASH_AD[27:26]	FLASH_AD[2:1]	---
A11	IDE_AD0	FLASH_AD25	FLASH_AD0	FLASH_CLE
B15, B16, A17, C17, D16, D17, E17	IDE_DATA[14:8]	FLASH_AD[24:18]	FLASH_AD[9:3]	---
E16, E15, D15, B17, C16, C15, A15, B14	IDE_DATA[7:0]	FLASH_AD[17:10]	FLASH_IO[7:0]	FLASH_IO[7:0]
C14	IDE_DATA15	FLASH_ALE		FLASH_ALE
B10	IDE_CS0#	FLASH_CS0#		FLASH_CE0#
C10	IDE_CS1#	FLASH_CS1#		FLASH_CE1#
B13	IDE_IOR0#	FLASH_RE#		FLASH_RE#
C13	IDE_IOW0#	FLASH_WE#		FLASH_WE#
A14 (Note 1)	IDE_DREQ0	FLASH_CS2#		FLASH_CE2#
C12	IDE_DACK0#	FLASH_CS3# (Boot Flash Chip Select)		FLASH_CE3#
A13	IDE_RDY0	FLASH_IOCHRDY		FLASH_RDY/BUSY#

Note 1. Ball A14 is the only ball that changes direction from IDE to Flash (input when in IDE mode, output when in Flash mode). If this interface is to be switched between IDE and Flash modes, then ball A14 needs an external pull-up to keep it high during IDE mode.

3.2.3.1 IDE Interface Signals

Signal Name	Ball No.	Type	Description
IDE_IRQ0	B12	I	**IDE Interrupt Request Channel 0.** This signal is required for all IDE applications that use IDE DMA modes. It is available on GPIO2, which must be configured in the IN_AUX1 mode. If an IDE application will not use IDE DMA modes, or if the Flash interface will be used instead of the IDE interface, then this signal may be used as GPIO2.
IDE_RESET#	F15	O	**IDE Reset.** IDE port reset signal. This bit can be controlled by Section 6.5.2.6 "IDE Power Management Register (IDE_PM)" on page 340.
IDE_AD[2:0]	B11, A12, A11	O	**IDE Address Bits.** These address bits are used to access a register or data port in a device on the IDE bus.
IDE_DATA[15:0]	C14, B15, B16, A17, C17, D16, D17, E17, E16, E15, D15, B17, C16, C15, A15, B14	I/O	**IDE Data Lines.** IDE_DATA[15:0] transfers data to/from the IDE devices.

Downloaded from Arrow.com.

3.2.3.1 IDE Interface Signals (Continued)

Signal Name	Ball No.	Type	Description
IDE_IOR0#	B13	O	**IDE I/O Read.** This output is asserted on read accesses to corresponding IDE port addresses. When in Ultra DMA/33 mode, this signal is redefined: • IDE_HDMA_RDY. Host DMA Ready for Ultra DMA data-in bursts. • IDE_HDMA_DS. Host DMA Data Strobe for Ultra DMA data-out bursts.
IDE_IOW0#	C13	O	**IDE I/O Write.** This output is asserted on write accesses to corresponding IDE port addresses. When in Ultra DMA/33 mode, this signal is redefined: • IDE_STOP - Stop Ultra DMA data burst.
IDE_CS0#	B10	O	**IDE Chip Select 0.** This chip select signal is used to select the Command Block registers in IDE Device 0.
IDE_CS1#	C10	O	**IDE Chip Select.** This chip select signal is used to select the Command Block registers in IDE Device 1.
IDE_DREQ0	A14	I	**DMA Request.** This input signal is used to request a DMA transfer from the CS5536. The direction of the transfers are determined by the IDE_IOR0# and IDE_IOW0# signals. **Note:** Ball A14 is the only ball that changes direction from IDE to Flash (input when in IDE mode, output when in Flash mode). If this interface is to be switched between IDE and Flash modes, then ball A14 needs an external pull-up to keep it high during IDE mode.
IDE_DACK0#	C12	O	**DMA Acknowledge.** This output signal acknowledges the IDE_DREQ0 request to initiate DMA transfers.
IDE_RDY0	A13	I	**I/O Ready.** When de-asserted, this signal extends the transfer cycle of any host register access when the device is not ready to respond to the data transfer request. When in Ultra DMA/33 mode, this signal is redefined: • STROBE - Device DMA Data Strobe for Ultra DMA data-in bursts. • DMARDY# - Device DMA Ready for Ultra DMA data-out bursts.

Downloaded from Arrow.com.

3.2.3.2 Flash Controller Interface

Signal Name	Ball No.	Type	Description
NOR Flash / GPCS Mode			
FLASH_CS[3:0]#	C12, A14, C10, B10	O	**Chip Selects.** Combine with FLASH_RE#/WE# strobes to access external NOR Flash devices or some simple devices such as a UART. CS3# is dedicated to a boot Flash device. **Note:** Ball A14 is the only ball that changes direction from IDE to Flash (input when in IDE mode, output when in Flash mode). If this interface is to be switched between IDE and Flash modes, then ball A14 needs an external pull-up to keep it high during IDE mode.
FLASH_RE#	B13	O	**Read Enable Strobe.** This signal is asserted during read operations from the NOR array.
FLASH_WE#	C13	O	**Write Enable Strobe.** This signal is asserted during write operations to the NOR array.
FLASH_ALE	C14	O	**Address Latch Enable.** Controls external latch (e.g., 74x373) for latching the higher address bits in address phase.
FLASH_AD[27:26]/ AD[2:1], FLASH_AD25/ AD0, FLASH_AD[24:18]/ AD[9:3]	B11, A12, A11, B15, B16, A17, C17, D16, D17, E17	O	**Address Bus.** During the address phase, address [27:18] is put on the bus. During the data phase, address [9:0] is put on the bus.
FLASH_AD[17:10]/ IO[7:0]	E16, E15, D15, B17, C16, C15, A15, B14	I/O	**Multiplexed Address and I/O Bus.** During the address phase, NOR address [17:10] are placed on these lines. During the data phase, it is the NOR I/O data bus.
FLASH_IOCHRDY	A13	I	**I/O Channel Ready.** When a device on the bus wants to extend its current cycle, it pulls this signal low to insert the wait state.
NAND Flash Mode			
FLASH_CE[3:0]#	C12, A14, C10, B10	O	**Chip Enables.** These signals remain low during a NAND cycle. **Note:** Ball A14 is the only ball that changes direction from IDE to Flash. Needs external pull-up for Flash use.
FLASH_RE#	B13	O	**Read Enable Strobe.** This signal is asserted during read operations from the NAND array.
FLASH_WE#	C13	O	**Write Enable Strobe.** This signal is asserted during write operations to the NAND array.
FLASH_ALE	C14	O	**Address Latch Enable.** Level signal to indicate an address byte is writing to the NAND Flash device.
FLASH_CLE	A11	O	**Command Latch Enable.** Indicates a command byte is being written to the device.
FLASH_IO[7:0]	E16, E15, D15, B17, C16, C15, A15, B14	I/O	**I/O Bus.** I/O bus for NAND Flash devices. Command, address, and data are sent on this bus. This bus is actively driven to zero with or without an LPC_CLK from and after reset.
FLASH_RDY/BUSY#	A13	I	**Ready/Busy#.** NAND Flash pulls this signal low to indicate it is busy with an internal operation. No further action is accepted except read status.

Downloaded from Arrow.com.

3.2.4 USB Interface

Signal Name	Ball No.	Type	Description
USB_PWR_EN1	P17	O	**USB Power Enable 1.** This signal is intended to be used to enable an external USB power source for the USB ports 1, 2, and 3. USB_PWR_EN1 is an active high signal. If low, it indicates that the external USB power source for the associated USB ports is turned off. Defaults off from reset.
USB_PWR_EN2	N16	O	**USB Power Enable 2.** This signal is intended to be used to enable an external USB power source for USB port 4. USB_PWR_EN2 is an active high signal. If low, it indicates that the external USB power source for the associated USB port is turned off. Defaults off from reset.
USB_OC_SENS#	N15	I	**USB Over Current Sense.** This signal is the logical OR or wired-OR from all external USB power supply devices, and is shared by all four ports. When pulled low it causes both USB_PWR_EN1 and USB_PWR_EN2 to de-assert and generate an interrupt. Tie high if not used.
USB1_DATPOS	K16	I/O	**USB Port 1 Data Positive.** This is the positive differential side of the USB data for port 1.
USB1_DATNEG	K17	I/O	**USB Port 1 Data Negative.** This is the negative differential side of the USB data for port 1.
USB2_DATPOS	L16	I/O	**USB Port 2 Data Positive.** This is the positive differential side of the USB data for port 2.
USB2_DATNEG	L17	I/O	**USB Port 2 Data Negative.** This is the negative differential side of the USB data for port 2.
USB3_DATPOS	H17	I/O	**USB Port 3 Data Positive.** This is the positive differential side of the USB data for port 3.
USB3_DATNEG	H16	I/O	**USB Port 3 Data Negative.** This is the negative differential side of the USB data for port 3.
USB4_DATPOS	G17	I/O	**USB Port 4 Data Positive.** This is the positive differential side of the USB data for port 4.
USB4_DATNEG	G16	I/O	**USB Port 4 Data Negative.** This is the negative differential side of the USB data for port 4.
USB_REXT	K15	Wire	**USB External Resistor Connect.** Connect this pin via a 3.4 K W (+/- 1%) resistor to ground.
USB_VBUS	M15	A	**USB Bus Voltage.** In device mode, this pin is used to sense the bus voltage coming over the USB receptacle to generate status signals, in order to inform the USB device software about the bus power status. This is also required for self powered devices.
$V_{CORE_USB[1:0]}$	H14, K14	PWR	**Core Power Working Connection (Total of 2).** Balls for the USB transceivers. Most applications should connect this to V_{CORE}.
$V_{IO_USB[3:0]}$	D14, F14, M14, P14	PWR	**I/O Power Connection (Total of 4).** Balls for the USB transceivers. Most applications should connect this to V_{IO}.
$V_{SSIO_USB[4:0]}$	E14, G14, J14, L14, N14	GND	**Ground Connection (Total of 5).** Balls for the USB transceivers. Most applications should connect this to ground.

Downloaded from Arrow.com.

3.2.5 System Management Bus (SMB) Interface

Signal Name	Ball No.	Type	Description
SMB_CLK	G3	I/O	**SMB Clock.** This is the clock for the System Management Bus. It is initiated by the master of the current transaction. Data is sampled during the high state of the clock. An external pull-up resistor is required. Shared with GPIO14. Set GPIO14 to IN_AUX1 and OUT_AUX1 modes simultaneously to use as SMB_CLK. See Table 3-8 "GPIO Options" on page 47. This ball is 5V tolerant.
SMB_DATA	F1	I/O	**SMB Data.** This is the bidirectional data line for the System Management Bus. Data may change during the low state of the SMB clock and should remain stable during the high state. An external pull-up resistor is required. Shared with GPIO15. Set GPIO15 to IN_AUX1 and OUT_AUX1 modes simultaneously to use as SMB_DATA. See Table 3-8 "GPIO Options" on page 47. This ball is 5V tolerant.

3.2.6 Low Pin Count (LPC) Interface

Signal Name (Note 1)	Ball No.	Type	Description
LPC_CLK	H1	I	**LPC Clock.** 33 MHz LPC bus shift clock.
LPC_AD[3:0]	K1, J1, J2, H2	I/O	**LPC Address/Data Bus.** This is the 4-bit LPC bus. Address, control, and data are transferred on this bus between the AMD Geode CS5536 companion device and LPC devices. An external pull-up of 100 kW is required on these balls (if used in LPC mode) to maintain a high level when the signals are in TRI-STATE mode. From reset, these signals are not driven. LPC_AD3 is shared with GPIO19. LPC_AD2 is shared with GPIO18. LPC_AD1 is shared with GPIO17. LPC_AD0 is shared with GPIO16. See Table 3-8 "GPIO Options" on page 47 for further details.
LPC_DRQ#	G1	I	**LPC DMA Request**. This is the LPC DMA request signal. Peripherals requiring service pull it low and then place a serially-encoded requested channel number on this line to initiate a DMA transfer. If the device wakes up from Sleep, at least six LPC_CLKs must occur before this input is asserted. Shared with GPIO20. See Table 3-8 "GPIO Options" on page 47. Tie high if selected as LPC_DRQ# but not used.

Downloaded from Arrow.com.

3.2.6 Low Pin Count (LPC) Interface (Continued)

Signal Name (Note 1)	Ball No.	Type	Description
LPC_SERIRQ	G2	I/O	**LPC Encoded IRQ**. This is the LPC serial interrupt request line, used to report ISA-style interrupt requests. It may be activated by either the AMD Geode CS5536 companion device or an LPC peripheral. An external pull-up of 100 kW is required if this ball is used in LPC mode to maintain a high level when the signal is in TRI-STATE. From reset, this signal is not driven. If the device wakes up from Sleep, at least six LPC_CLKs must occur before this input is asserted if operating in Quiet mode. Shared with GPIO21. See Table 3-8 "GPIO Options" on page 47.
LPC_FRAME#	H3	O	**LPC Frame**. This signal provides the active-low LPC FRAME signal used to start and stop transfers on the LPC bus. Shared with GPIO22. See Table 3-8 "GPIO Options" on page 47.

Note 1. All LPC signals, except LPC_CLK are shared on GPIO balls (see Table 3-8 "GPIO Options" on page 47). The AMD Geode CS5536 companion device powers up with this group of balls set to the LPC mode; to use them as GPIOs they must be explicitly reprogrammed. The LPC signals may be switched to GPIOs via MSR 51400015h (see Section 6.6.2.10 "Ball Options Control (DIVIL_BALL_OPTS)" on page 365).

Use RESET_OUT# for LPC reset.
Use any GPIO assigned as a PME for the LPC PME.
Use any GPIO assigned as an SMI for the LPC SMI.
Use general Sleep and Standby controls (SLEEP_X, ball C2 and SLEEP_Y, ball J3) in place of LPC_PD# for LPC power-down.

Downloaded from Arrow.com.

3.2.7 Audio Codec 97 Interface

Signal Name (Note 1)	Ball No.	Type	Description
AC_CLK	M1	I	**Audio Bit Clock**. The serial bit clock from the codec. The frequency of the bit clock is 12.288 MHz and is derived from the 24.576 MHz crystal input to the external audio codec. Not required if audio not used; tie low.
AC_S_OUT	L2	O	**Audio Controller Serial Data Out**. This output transmits audio data to the codec. This data stream contains both control data and the DAC audio data. The data is sent on the rising edge of the AC_CLK. Connect to the audio codec's serial data input pin.
BOS1		I	**Boot Options Select Bit 1.** During system reset, this ball is the MSB of the 2-bit boot option (balls L2 and L3) and is used to determine the location of the system boot device. It should be pulled low if required by Table 3-5 "Boot Options Selection" on page 34, otherwise, an internal pull-up, asserted during reset, will pull it high. During reset, the ball output drivers are held in TRI-STATE mode, and the ball is sampled on the rising edge of RESET_OUT# (i.e., when external reset is de-asserted). After reset, this signal defaults low (off).
AC_S_IN	L1	I	**Audio Controller Serial Data Input.** This input receives serial data from the audio codec. This data stream contains both control data and ADC audio data. This input data is sampled on the falling edge of AC_CLK. Connect to the audio codec's serial data output pin.
AC_S_SYNC	L3	O	**Audio Controller Sync.** This is a 48 KHz sync pulse that signifies the beginning of a serial transfer on AC_S_OUT, AC_S_IN, and AC_S_IN2. AC_S_SYNC is synchronous to the rising edge of AC_CLK. Connect to the audio codec's SYNC pin.
BOS0		I	**Boot Options Select Bit 0.** During system reset, this ball is the LSB of the 2-bit boot option (balls L2 and L3), used to determine the location of the system boot device. It should be pulled low if required by Table 3-5 "Boot Options Selection" on page 34, otherwise, an internal pull up, asserted during reset, will pull it high. During reset, the ball drivers are held in TRI-STATE mode, and the ball is sampled on the rising edge of RESET_OUT# (i.e., when external reset is de-asserted). After reset, this signal defaults low (off).
AC_BEEP	K3	O	**Legacy PC/AT Speaker Beep**. Connect to codec's PC_BEEP. This function is only available when GPIO1 is programmed to OUT_AUX1. See Table 3-8 "GPIO Options" on page 47.
AC_S_IN2	J3	I	**Audio Controller Serial Data Input 2.** This input receives serial data from a second codec. This data stream contains both control data and ADC audio data. This input data is sampled on the falling edge of AC_CLK. If the codec's Ready bit is set in this stream (slot 0, bit 15), then it is functionally ORed with AC_S_IN. Connect to a second codec's serial data output. This function is only available when GPIO12 is programmed to IN_AUX1. See Table 3-8 "GPIO Options" on page 47.

Note 1. Use RESET_OUT# for AC97 reset.

Downloaded from Arrow.com.

3.2.8 GPIOs

Table 3-8 gives the dedicated functions associated with each GPIO. These functions may be invoked by configuring the associated GPIO to the IN_AUX1, OUT_AUX1, or OUT_AUX2 modes. (The functions themselves are described in Table 3-9 "GPIOx Available Functions Descriptions" on page 49.) The column “Recommended Use” is a guideline for system designers to assign GPIO functionality. Any GPIO input can be mapped to an interrupt, ASMI, or PME. Details of configuring the GPIOs are in Section 6.16 "GPIO Device Register Descriptions" on page 480. All GPIOs have selectable pull-up and/or pull-down resistors available on the output, except for those indicated by Note 1 in the “Weak PU/PD” column of Table 3-8.

Table 3-8. GPIO Options

GPIO	Ball No.	Power Domain	Buffer Type	Post Reset		Recommended Use	Function Programming Options		
				Weak PU/PD	I/O Config		IN_AUX1	OUT_AUX1	OUT_AUX2
GPIO0	R2	W	PCI	(Note 1)	Disabled	PCI_INTA# (Note 2)			
GPIO1	K3	W	GP24	PU	Disabled	---		AC_BEEP	MFGPT0_C2
GPIO2	B12	W	IDE	(Note 1)	Disabled	---	IDE_IRQ0		
GPIO3	E1	W	SMB	(Note 1)	Disabled	DDC_SCL (Note 3)	UART2 RX		
GPIO4	E2	W	SMB	(Note 1)	Disabled	DDC_SDA (Note 3)		UART2 TX	
GPIO5	D3	W	GP24	Auto-sense	Disabled	---	MFGPT1_RS	MFGPT0_C1	
GPIO6	D2	W	GP24	Auto-sense	Disabled	---	MFGPT0_RS	MFGPT1_C1	MFGPT2_C2
GPIO7	C2	W	PCI	(Note 1)	Disabled	PCI_INTB# (Note 2)		MFGPT2_C1	SLEEP_X
GPIO8	E3	W	GP24	PU	Disabled	---		UART1_TX	UART1_IR_TX
GPIO9	D1	W	GP24	PU	Disabled	---	UART1_RX or UART1_IR_RX		
GPIO10	C3	S (Note 4)	GP24	PU	Disabled	--- (Note 5)	THRM_ALRM#		
GPIO11	A1	W	GP24	PU	Disabled	---		SLP_CLK_EN#	MFGPT1_C2
GPIO12	J3	W	GP24	PD	Disabled	---	AC_S_IN2		SLEEP_Y
GPIO13	F2	W	GP24	PU	Disabled	--- (Note 5)	SLEEP_BUT		
GPIO14	G3	W	SMB	(Note 1)	Disabled	--- (Note 6)	SMB_CLK_IN	SMB_CLK_OUT	
GPIO15	F1	W	SMB	(Note 1)	Disabled	--- (Note 6)	SMB_DATA_IN	SMB_DATA_OUT	
GPIO16	H2	W	PCI	(Note 1)	LPC (Note 7)	LPC_AD0			
GPIO17	J2	W	PCI	(Note 1)	LPC (Note 7)	LPC_AD1			
GPIO18	J1	W	PCI	(Note 1)	LPC (Note 7)	LPC_AD2			
GPIO19	K1	W	PCI	(Note 1)	LPC (Note 7)	LPC_AD3			
GPIO20	G1	W	PCI	(Note 1)	LPC (Note 7)	LPC_DRQ#			
GPIO21	G2	W	PCI	(Note 1)	LPC (Note 7)	LPC_SERIRQ	MFGPT2_RS		
GPIO22	H3	W	PCI	(Note 1)	LPC (Note 7)	LPC_FRAME#			
GPIO24	C9	S	SMB	(Note 1)	Disabled	---		WORK_AUX Note 8	
GPIO25	A9	S	GP24	PU/PD	Disabled	---	LOW_BAT#		MFGPT7_C2
GPIO26	B7	S	GP24	PU/PD	Disabled	PME# (Note 9)	MFGPT7_RS		
GPIO27	C8	S	GP24	PU/PD	Disabled	---		MFGPT7_C1	32KHZ
GPIO28	A8	S	GP24	PU/PD	Input Enabled (Note 10)	PWR_BUT# (Note 11)	PWR_BUT# (Note 12)		

Note 1. No internal pull-up/down available. If not used, tie low.

Note 2. Any GPIO can be used as an interrupt input without restriction. These particular GPIOs have PCI I/O buffer types for complete PCI bus compatibility. However, such strict compatibility is generally not required.

Downloaded from Arrow.com.

Note 3. Applications incorporating a CRT often require support for the Display Data Channel (DDC) serial interface. These particular GPIOs have open collector SMB I/O buffer types required by the DDC interface specification. The DDC protocol supplied by AMD is provided via software implementation and defaults to these GPIOs. However, any design not needing strict DDC electrical support can use other GPIOs. Lastly, applications not incorporating DDC use at all may use these GPIOs without restriction.

Note 4. The I/O cell of the pin GPIO10/THRM_ALRM# is powered by the Standby power domain. The logic associated with the function GPIO10 is powered by the Working power domain while the logic associated with the function THRM_ALRM# is powered by the Standby power domain

Note 5. Internal signal is active high. Use GPIO invert for active low external.

Note 6. When both IN_AUX1 and AUX_OUTx are enabled, I/O direction on this ball is controlled by the SMB Controller.

Note 7. Defaults to LPC use. Use Ball Options MSR (see Table 3-6 on page 34) to switch this ball to GPIO control.

Note 8. When WORK_AUX is used for Save-to-RAM (ACPI S3), initial state is GPIO24 input. This can cause power turn on issues. An external blocking circuit must be used to prevent WORK_AUX from incorrectly causing power application at initial application of the standby voltages.

Note 9. Any GPIO can be used as a Power Management Event (PME) wakeup input without restriction. PMEs are supported for both Sleep and Standby wakeup. However, if Standby wakeup is desired, a GPIO on the Standby power domain must be used. Only GPIO[24:28] are supplied via the Standby Power Rail and are typically used as follows:
GPIO24 - Auxiliary Working Power Control
GPIO25 - Low Battery Alarm
GPIO26 - PME
GPIO27 - MFGPT setup to provide a blink
GPIO28 - Power Button
Depending on application use, the PME function could be moved to GPIO[24:27]. If only external PME wakeup from Sleep is required, the PME function could be moved to GPIO[0:23]. Lastly, the PME function could simply not be used, making more GPIOs available for other uses.

Note 10. GPIOH_IN_EN (GPIO Offset A0h) and GPIOH_IN_AUX1_SEL (GPIO Offset B4h) are enabled.

Note 11. Reset default.

Note 12. If the GPIO28 function is desired, the power button functionality in the PMC must be disabled before the IN_AUX1 function is disabled.

Downloaded from Arrow.com.

3.2.8.1 GPIO Functions and Recommended Usage

Functions listed in Table 3-9 are functions that may be assigned to specific GPIO balls. The “Ball No.” column gives the ball that must be used if this function is selected, and the “GPIOx” column gives the GPIO that the function is associated with.

Table 3-9. GPIOx Available Functions Descriptions

Function Name	Ball No.	GPIO[x]	Type	Description
32KHZ	C8	GPIO27	O	**32 KHz Clock.** When invoked, this ball produces a buffered output of the 32 KHz clock provided on KHZ32_XCI and KHZ32_XCO (balls A4 and B3, respectively). This option is invoked by selecting the OUT_AUX2 option of GPIO27. Note that since GPIO27 is in the Standby power domain, the 32 KHz clock output will continue in Sleep and Standby states.
AC_BEEP	K3	GPIO1	O	**Legacy PC/AT Speaker Beep**. Connect to codec’s PC_BEEP.
DDC_SCL	E1	GPIO3	I/O	**DDC Serial Clock.** This is a “recommended use” for GPIO3, because this is one of the few GPIOs that have a high drive capacity, open-drain output. The serial clock function must be implemented in software to support DDC monitors. There is no dedicated DDC clock function within the CS5536.
DDC_SDA	E2	GPIO4	I/O	**DDC Serial Data.** This is a “recommended use” for GPIO4, because this is one of the few GPIOs that have a high drive capacity, open-drain output. The serial data function must be implemented in software to support DDC monitors. There is no dedicated DDC data function within the CS5536.
LOW_BAT#	A9	GPIO25	I	**Low Battery Detect.** This is a “recommended use” for GPIO25 in battery-powered systems. It is invoked by setting GPIO25 to the IN_AUX1 mode. The signal is intended to be driven low by an external circuit when the battery voltage falls below a preset value (determined by the external circuit). It could be used to generate a PME (interrupt) - connected to LowBat function in the Power Management Controller that would then de-assert WORKING and WORK_AUX, if no software action is taken within a programmable time.
MFGPT0_C1	D3	GPIO5	O	**Multi-Function General Purpose Counter #0 - Compare 1 Out.** An output from the counter that, when asserted, indicates the counter has reached the conditions set up in the counter’s Compare 1 registers.
MFGPT0_C2	K3	GPIO1	O	**Multi-Function General Purpose Counter #0 - Compare 2 Out.** An output from the counter that, when asserted, indicates the counter has reached the conditions set up in the counter’s Compare 2 registers.
MFGPT0_RS	D2	GPIO6	I	**Multi-Function General Purpose Counter #0 - Restart.** An input to the counter that causes it to be reset to initial conditions and then to resume counting.
MFGPT1_C1	D2	GPIO6	O	**Multi-Function General Purpose Counter #1 - Compare 1 Out.** An output from the counter that, when asserted, indicates the counter has reached the conditions set up in the counter’s Compare 1 registers.
MFGPT1_C2	A1	GPIO11	O	**Multi-Function General Purpose Counter #1 - Compare 2 Out.** An output from the counter that, when asserted, indicates the counter has reached the conditions set up in the counter’s Compare 2 registers.

Downloaded from Arrow.com.

Table 3-9. GPIOx Available Functions Descriptions (Continued)

Function Name	Ball No.	GPIO[x]	Type	Description
MFGPT1_RS	D3	GPIO5	I	**Multi-Function General Purpose Counter #1 - Restart.** An input to the counter that causes it to be reset to initial conditions and then to resume counting.
MFGPT2_C1	C2	GPIO7	O	**Multi-Function General Purpose Counter #2 - Compare 1 Out.** An output from the counter that, when asserted, indicates the counter has reached the conditions set up in the counter's Compare 1 registers.
MFGPT2_C2	D2	GPIO6	O	**Multi-Function General Purpose Counter #2 - Compare 2 Out.** Output from the counter that, when asserted, indicates the counter has reached the conditions set up in the counter's Compare 2 registers.
MFGPT2_RS	G2	GPIO21	I	**Multi-Function General Purpose Counter #2 - Restart.** An input to the counter that causes it to be reset to initial conditions and then to resume counting.
MFGPT7_C1	C8	GPIO27	O	**Multi-Function General Purpose Counter #7 - Compare 1 Out.** An output from the counter that, when asserted, indicates the counter has reached the conditions set up in the counter's Compare 1 registers.
MFGPT7_C2	A9	GPIO25	O	**Multi-Function General Purpose Counter #7 - Compare 2 Out.** An output from the counter that, when asserted, indicates the counter has reached the conditions set up in the counter's Compare 2 registers.
MFGPT7_RS	B7	GPIO26	I	**Multi-Function General Purpose Counter #7 - Restart.** An input to the counter that causes it to be reset to initial conditions and then to resume counting.
PCI_INTA#	R2	GPIO0	I	**PCI Interrupt A.** This is a "recommended use" for GPIO0, because this GPIO has a PCI-compatible output type.
PCI_INTB#	C2	GPIO7	I	**PCI Interrupt B.** This is a "recommended use" for GPIO7, because this GPIO has a PCI-compatible output type.
PME#	B7	GPIO26	I	**Power Management Event.** This is a "recommended use" for GPIO26. By mapping this GPIO (or any other) to the PME# function, the CS5536 may be awakened from a Sleep state when the mapped ball (in the recommended case, ball B7) is pulled low.

Downloaded from Arrow.com.

Table 3-9. GPIOx Available Functions Descriptions (Continued)

Function Name	Ball No.	GPIO[x]	Type	Description
PWR_BUT#	A8	GPIO28	I	**Power Button.** This GPIO can be mapped to the PMC "button-push" event, that may be used to implement the power ON and the four-second-delay power OFF functions. Note that GPIO28 comes up in the IN_AUX1 mode after reset, enabling this feature. Any power button change on this input must be at least two KHZ32_XCI edges (approximately 62 µs) in duration to be correctly detected. If spurious transitions smaller than this are possible, then use on-chip GPIO input filter function to insure proper operation. Additionally, the rise or fall time on this input must be less than 10 µs. If transition times longer than this are possible, then use the on-chip GPIO input filter function to insure proper operation. From the first power-up of the Standby power domain under which no filter is enabled, spurious transitions on the first high-to-low power button push are acceptable as long as the input is eventually low at least two KHZ32_XCI edges. Additionally, transition times as slow as 1 ms are acceptable for the first push. Note that these relaxed requirements work because this input is effectively a "don't care" at the hardware level after the first power-up until software enables use of the power button. Before enabling use, the software can setup the GPIO filter or other functions as needed. Skip feature: This input may be tied to ground in order for the system to come on immediately when Standby and Working power are available. Specifically, systems that do not incorporate a power button should tie this input to ground. See Section 7.6 "Skip Parameter" on page 605 for more information on the Skip feature. One side effect of the Skip feature is that the platform design must insure that this input is not low when Standby power is applied if the Skip feature is not desired. Specifically, systems that do incorporate use of a power button must insure that this input ramps to a high no more than 1 µs behind V_{IO_VSB} ramp-up. Failure to quickly establish a high on this input during power-up could result in a spurious Skip.
AC_S_IN2	J3	GPIO12	I	**Audio Controller Serial Data Input 2.** This input receives serial data from a second codec. This data stream contains both control data and ADC audio data. This input data is sampled on the falling edge of AC_CLK. If the codec's Ready bit is set in this stream (slot 0, bit 15), then it is functionally ORed with AC_SDATA_IN1. Connect to second codec's serial data output.
SLP_CLK_EN#	A1	GPIO11	O	**Sleep Clock Enable.** This signal is a control that is intended to be connected to the external system clock generator chip. The intended use is, when high, the clock generator runs; when low, the clock generator turns off. From reset, a pull-up makes this GPIO high. The active state of this signal indicates that the CS5536 is in the Sleep state.
SLEEP_BUT	F2	GPIO13	I	**Sleep Button.** This GPIO can be mapped to a PME "button-push" type event and used to request the system software to put the system to Sleep.

Downloaded from Arrow.com.

Table 3-9. GPIOx Available Functions Descriptions (Continued)

Function Name	Ball No.	GPIO[x]	Type	Description
SLEEP_X	C2	GPIO7	O	**Sleep X.** This general purpose power control output becomes active as the CS5536 enters and exits various power management modes. It may be used by external devices to control their power states synchronous with power state changes in the CS5536. It may be configured as active high or active low.
SLEEP_Y	J3	GPIO12	O	**Sleep Y.** This general purpose power control output becomes active as the CS5536 enters and exits various power management modes. It may be used by external devices to control their power states synchronous with power state changes in the CS5536. It may be configured as active high or active low.
SMB_CLK_IN	G3	GPIO14	I	**SMB Clock In / SMB Clock Out.** This is the clock for the SMB. In order to use it properly, the associated GPIO (GPIO14) should be set to IN_AUX1 and OUT_AUX1 simultaneously. The SMB controller determines the direction (in or out) of the associated ball.
SMB_CLK_OUT			O	
SMB_DATA_IN	F1	GPIO15	I	**SMB Data In / SMB Data Out.** This is the data line for the SMB. In order to use it properly, the associated GPIO (GPIO15) should be set to IN_AUX1 and OUT_AUX1 simultaneously. The SMB controller determines the direction (in or out) of the associated ball.
SMB_DATA_OUT			O	
THRM_ALRM#	C3	GPIO10	I	**Thermal Alarm**. When connected to an external thermal monitor, this input can act as a thermal fail-safe to shut down power by signalling the power management controller to de-assert WORKING and WORK_AUX. Set GPIO10 to the IN_AUX1 mode to enable this feature.
IDE_IRQ0	B12	GPIO2	I	**IDE Interrupt.** Indicates the external IDE device has completed the DMA operation.
UART1_IR_TX	E3	GPIO8	O	**UART1 Infrared Transmit.** This signal is the data output (TX) from the infrared mode of UART1. It is available when GPIO8 is switched to the OUT_AUX2 mode.
UART1_RX	D1	GPIO9	I	**UART1 Receive or UART1 Infrared Receive.** This signal is the data input (RX) to the UART1. It acts as the input in both IR and conventional modes of UART1. It is available when GPIO9 is switched to the IN_AUX1 mode.
UART1_IR_RX			I	
UART1_TX	E3	GPIO8	O	**UART1 Transmit.** This signal is the data output (TX) from the conventional mode of UART1. It is available when GPIO8 is switched to the OUT_AUX1 mode.
UART2_RX	E1	GPIO3	I	**UART2 Receive.** This signal is the data input (RX) to the UART2. It acts as the input of UART2. It is available when GPIO3 is switched to the IN_AUX1 mode.
UART2_TX	E2	GPIO4	O	**UART2 Transmit.** This signal is the data output (TX) from the conventional mode of UART2. It is available when GPIO4 is switched to the OUT_AUX1 mode.
WORK_AUX	C9	GPIO24	O	**Working Auxiliary.** When the system supports ACPI S3 (Save-to-RAM), this output is intended to be used to control external power sources to all devices except memory (which is intended to be controlled by WORKING). WORK_AUX de-asserts in synchronism with WORKING. When WORK_AUX is used for Save-to-RAM (ACPI S3), initial state is GPIO24 input. This can cause power turn on issues. An external blocking circuit must be used to prevent WORK_AUX from incorrectly causing power application at initial application of the standby voltages.

Downloaded from Arrow.com.

3.2.9 Debug and Manufacturing Test Interface

Signal Name	Ball No.	Type	Description
TCK	N2	I	**JTAG Test Clock.**
TMS	N3	I	**JTAG Test Mode Select.**
TDI	P1	I	**JTAG Test Data In.**
TDO	P2	O, TS	**JTAG Test Data Out.** From reset, this output is in TRI-STATE mode. It is only enabled and driven when commanded to output or pass-through data per JTAG standards.
T_DEBUG_IN	M2	I	**Test Debug Input.** Input to the GeodeLink Control Processor (GLCP) from the AMD Geode LX processor.
T_DEBUG_OUT	M3	O	**Test Debug Out.** Output from the GeodeLink Control Processor (GLCP) to the AMD Geode LX processor.
LVD_TEST	B9	O	**Low Voltage Detect Test.** Manufacturing test only. No operational use. Make no connection.
TEST_MODE	A6	I	**Test Mode.** Manufacturing test only. No operational use. Tie low.
FUNC_TEST	F3	I	**Functional Test.** Manufacturing test only. No operational use. Tie low.
USB_PTEST	G15	I/O	**USB PHY Test.** Manufacturing test only. No operational use. Leave it open (unconnected).

3.2.10 Power, Ground, and No Connects

Signal Name (Note 1)	Ball No.	Type	Description
V_{CORE}	D8, D10, H4, K4, P8, P10	PWR	**Core Power Working Connection (Total of 6).**
V_{CORE_VSB}	A7	PWR	**Core Power Standby Connection.**
V_{IO}	D4, D6, D9, D12, F4, M4, P4, P6, P9, P12	PWR	**I/O Power Connection (Total of 10).**
V_{IO_VSB}	B6	PWR	**I/O Power Standby Connection.**
V_{SS}	D5, D7, D11, D13, E4, G4, J4, L4, N4, P5, P7, P11, P13	GND	**Ground Connection (Total of 13).**
NC	A2, A16, B1, B2, B4, B5, C4, C11, F16, J16, J17, L15, M16, M17, R3, R9, T2, U2, U15, U16, U17	---	**No Connection (Total of 21).** These lines must be left disconnected. Connecting any or these lines to a pull-up/down resistor, an active signal, power, or ground could cause unexpected results and possible malfunctions.

Note 1. For module specific power and ground signals see:
Section 3.2.1 "System Interface Signals" on page 36.
Section 3.2.4 "USB Interface" on page 43.

Downloaded from Arrow.com.

Downloaded from Arrow.com.

4 Global Concepts and Features

4.1 GeodeLink™ Architecture Overview

The information in this section provides a basic understanding of the architecture used to internally connect GeodeLink™ devices. The actual existence of architecture is generally invisible to the user and the system programmer. AMD *Core BIOS* software provides all GeodeLink initialization and support, including related Model Specific Registers (MSRs). Additionally, this software provides a *Virtual PCI Configuration Space* that abstracts the architecture to industry standard interfaces. From this interface, all GeodeLink Devices appear in one PCI multi-function configuration space header on the external PCI bus.

4.1.1 Introduction

This component is based on the GeodeLink packet architecture. It consists of a set of GeodeLink Devices and a GeodeLink Control Processor (GLCP) connected through the GeodeLink Interface Unit (GLIU).

A simplified view of a GLIU connected with three generic GeodeLink Devices is illustrated in Figure 4-1. The following points are relevant:

- All outputs from a GeodeLink Device to the GLIU are registered.
- All outputs from the GLIU to a GeodeLink Device are registered. Furthermore, there are dedicated output registers for each GeodeLink Device.
- GeodeLink Device inputs from the GLIU need not be registered, but they are buffered at the interface.
- All connections between the GeodeLink Devices and GLIU are dedicated point-to-point connections with one source and one load. There are no buses in TRI-STATE mode.
- The GLIU itself is a GeodeLink Device and is always Port 0.

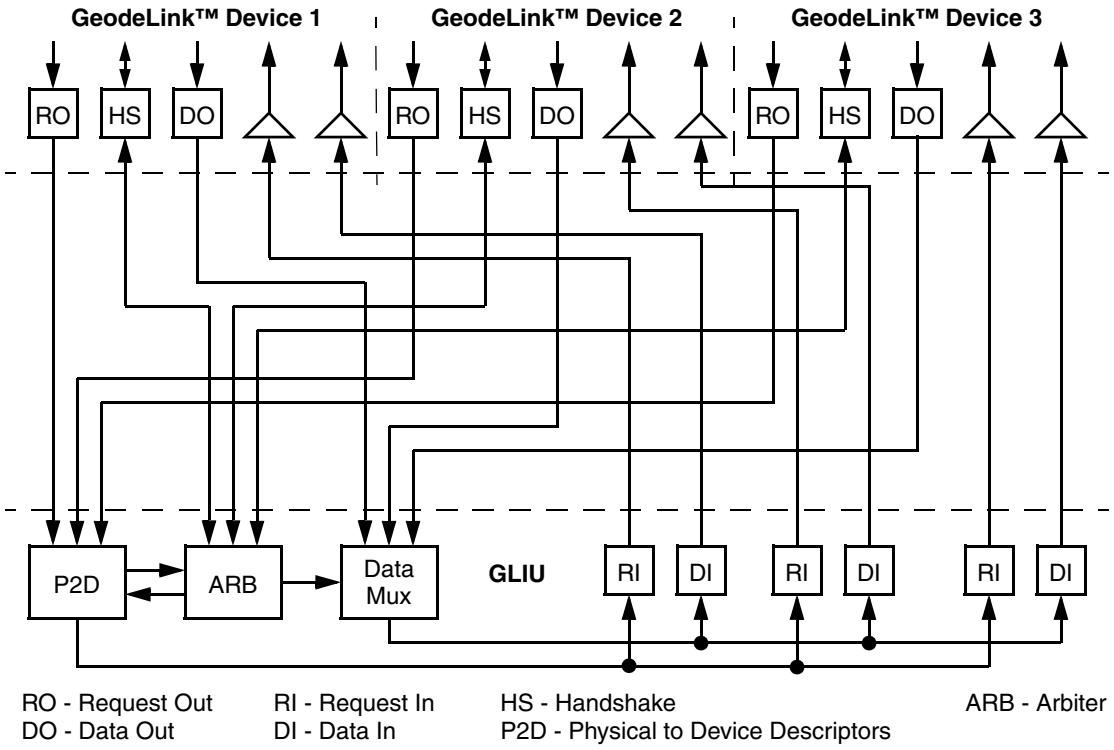

Figure 4-1. Simplified GLIU with Generic GeodeLink™ Devices

Downloaded from Arrow.com.

The GLIU implements the “bus”. Transactions between GeodeLink Devices and the GLIU are conducted with packets. The GLIU accepts request packets from masters and routes them to slaves. Similarly, slave response packets are routed back to the master. The bus is non-blocking. Several requests can be pending, but order is guaranteed. Broadcasts are not allowed. All packets have one source and one destination.

4.1.2 Routing

The Physical to Device (P2D) descriptors control the routing of the packets. The descriptors are initialized by software at system setup. They establish the address map to be used by the system. They associate a memory or I/O address range with a GLIU port.

When a request packet arrives from a Request Out (RO) port, the address and other attributes in the packet are used to look up the destination port. If the port Request In (RI) is available, the request is passed. If there are multiple requests, priorities are used to establish which requestor and destination port utilize the transfer cycle. A transfer from an RO to an RI takes one clock edge.

4.1.3 Response Packets

Earlier in this section, it was indicated that an RO can be used to present a write data packet or a read response packet. The use and need of a read response packet for a read request is obvious. However, there is also an optional write response packet. This tells the requestor that the write has completed. This is used to hold a processor I/O write instruction until the response is received, that is, I/O writes are never posted. Memory writes are always posted.

The response packet is also used to generate Synchronous System Management Interrupts (SSMIs). System Management Mode (SMM) is used for hardware emulation and other traps. An SSMI can be generated by a GeodeLink Device or via special GLIU descriptors. When the response arrives back at the processor, interface circuits generate an SMI to invoke the SMM software. Lastly, all response packets contain an *exception* flag that can be set to indicate an error.

Downloaded from Arrow.com.

4.1.4 ASMI and Error

Two additional signals are needed to complete this GeodeLink architecture overview: Asynchronous System Management Interrupt (ASMI) and Error. Each GeodeLink Device outputs these ASMI and Error signals.

An ASMI is much like a legacy interrupt, except it invokes the SMM handler. As the name suggests, an ASMI is an asynchronous event, while an SSMI is synchronous to the instruction that generated it.

The Error signal simply indicates some type of unexpected error has occurred. A device asserts this signal. In a normal operating system, this would not be asserted. For example, a disk read error or ethernet network error would be signaled using normal GeodeLink packet mechanisms. This signal is reserved for the truly unexpected.

Each GeodeLink Device has mechanisms for enabling and mapping multiple internal sources down to these singular outputs. The mechanism consists of the logical “OR” of all enabled sources. The GLIU receives the ASMI and Error pair from each GeodeLink Device. It has the same “OR” and enable mechanism that finally results in a single ASMI and Error pair for the whole component (see Figure 4-2). The ASMI is routed to the processor, while the Error is routed to the GLCP. Within the GLCP, the Error signal can be mapped into an ASMI for routing back into the GLIU.

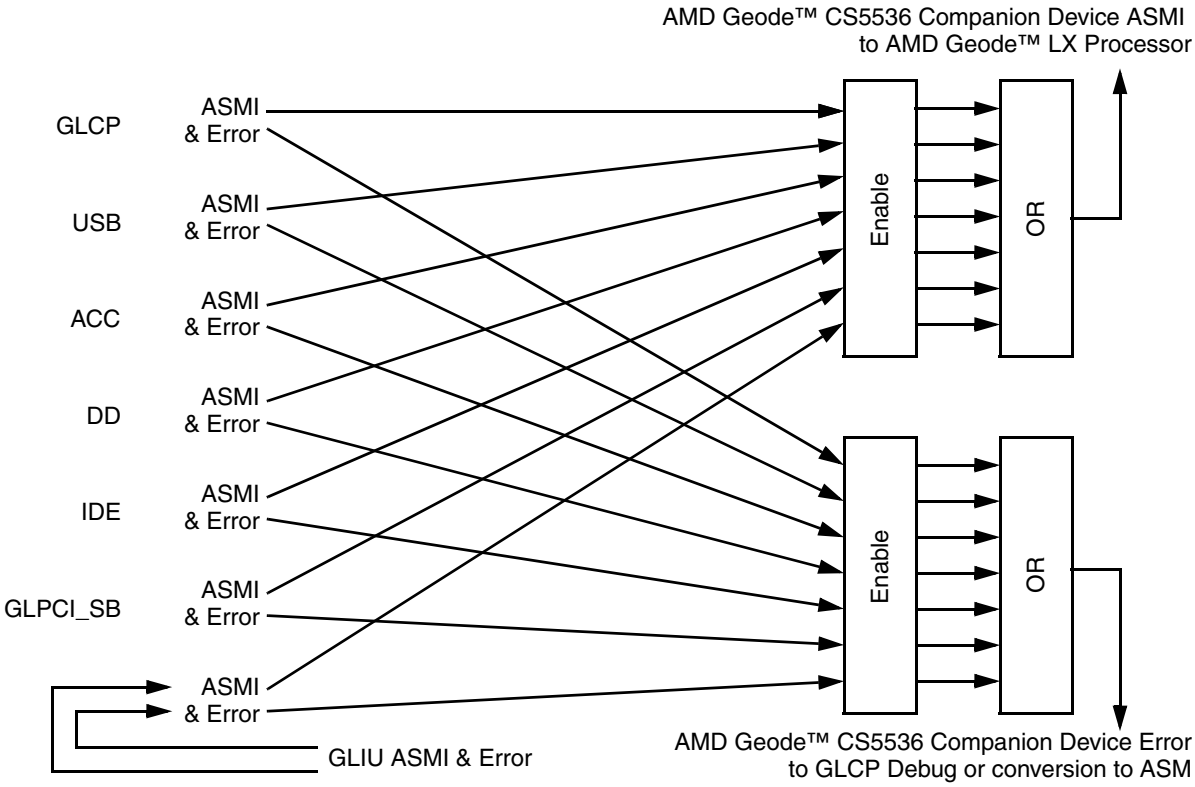

Figure 4-2. GeodeLink™ Architecture ASMI and Error Routing

Downloaded from Arrow.com.

4.1.5 Topology

The connection of the GLIU to the seven GeodeLink Devices of the AMD Geode™ CS5536 companion device is illustrated in Figure 4-3. Note the port number of the GeodeLink Device. By design convention, the GLIU is always Port 0. Part of the Physical to Device (P2D) descriptor is a port number. When there is a hit on the descriptor address, the port number indicates which GeodeLink Device to route the packet to. If there is no hit, then the packet is routed to the default port. For the CS5536 companion device, the default is always Port 4, that is, the Diverse Device (DD).

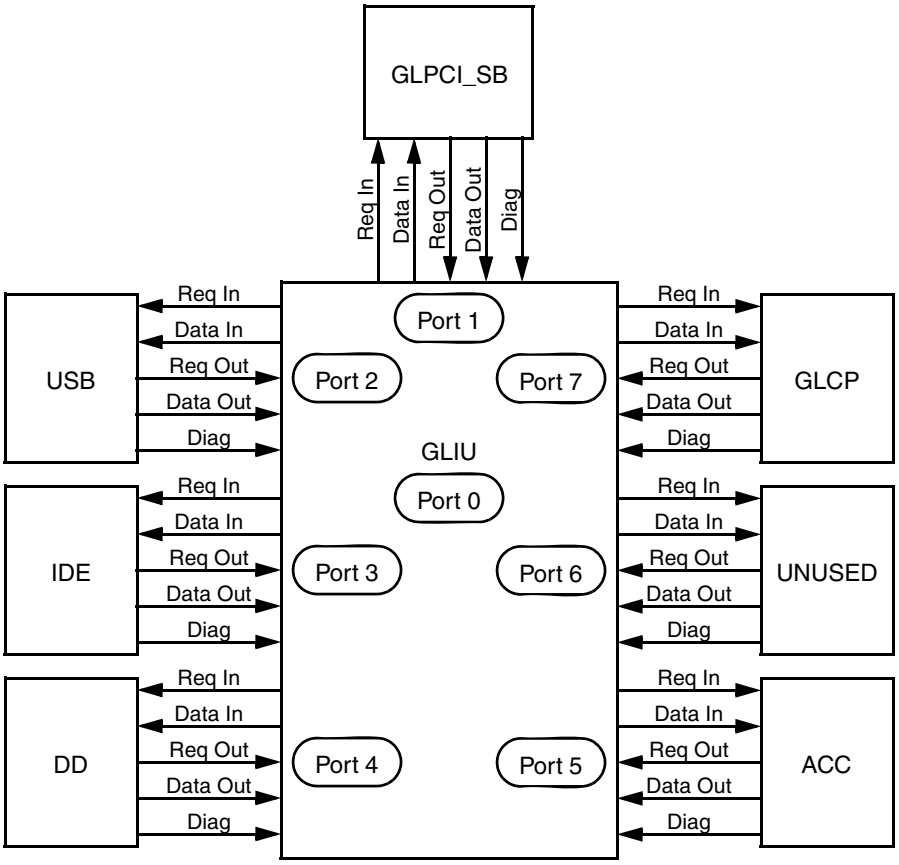

Figure 4-3. AMD Geode™ CS5536 Companion Device GeodeLink™ Architecture Topology

Downloaded from Arrow.com.

4.1.6 Address Spaces and MSRs

The GLIU and GeodeLink Devices support the traditional memory and I/O spaces. The memory space supports a traditional 32-bit byte address with associated byte enables. The I/O space is a 20-bit byte address with byte enables. I/O registers can be 8, 16, or 32 bits. The GLIU has both memory and I/O P2Ds for routing.

In addition to the above spaces, there is a Model Specific Register (MSR) space that is tied to the GeodeLink topology. As introduced in the previous section, the GLIU has eight ports with Port 0 assigned to the GLIU. An MSR "address" is relative to the device making a request to it and the topology between the requestor and the MSR. Thus, for the AMD Geode LX processor to address an MSR in the CS5536 companion device, it specifies a series of ports that must be traversed to get there. Once a specific device port is identified, additional address bits are available to select a specific MSR within a given device.

MSR space is functionally similar to PCI configuration space. At boot time system initialization, the Core BIOS (see Section 4.1 "GeodeLink™ Architecture Overview" on page 55) traverses the topology of the system to determine what is present. By convention, the first MSR at each port is an ID register that indicates a specific device. Once the Core BIOS knows what is present, it assigns devices to specific locations in the appropriate memory or I/O address space using MSRs. Generally, MSRs are used to configure and set up GeodeLink Devices, but are not used for ongoing operations.

The "assignment" MSRs are located in the GLIUs as "descriptors". The "assignment descriptor" basically says: "route a request packet containing address X to port Y". Port Y can be the final device or another GLIU. This second GLIU must have assignments to route address X to port Z. This process continues until the final device port is specified. In addition to the "positive" address decode above, each GLIU has a subtractive port that takes all addresses not assigned to a specific port. There is always a default subtractive port path to the boot ROM to allow the central processor to start executing code from time zero. Thus, from system reset, there is a default memory address path that allows the first processor instruction fetch to:

1) Proceed down through the two GLIUs of the AMD Geode LX processor;
2) cross the PCI bus to the CS5536 companion device;
3) proceed down through the CS5536 companion device GLIU to the default port connected to the DD; and
4) access the boot device connected to the DD.

4.1.7 Special Cycles and BIZZARO Flag

The BIZZARO flag is used to indicate special cycles and exceptions to normal packet operation. All special cycles traverse the GLIU system as I/O packets with the BIZZARO flag set. The special cycles are:

1) Interrupt Acknowledge: I/O read from address zero.
2) Shutdown: I/O write to address zero.
3) Halt: I/O write to address one.

Downloaded from Arrow.com.

4.2 MSR Addressing

An MSR address consists of the fields shown in Table 4-1.

When a GLIU receives an MSR packet, it routes the packet to the port specified in *Field 0* but shifts address bits [31:14] to the left by three bits and replaces bits [16:14] with zero. Thus, Field 1 is moved to Field 0, Field 2 is moved to Field 1, etc. The address field always remains unchanged and selects one 64-bit MSR per address value, that is, the address value 0 accesses one 64-bit register, the address value 1 accesses one 64-bit register, the address value 2 accesses one 64-bit register, etc. There are no MSR byte enables. All 64 bits are always written and read.

Many CS5536 companion device MSRs are only 32 bits in physical size. In these cases, interface logic discards the upper 32 bits on write, and pads the upper 32 bits on reads. Read padding is undefined. Lastly, CS5536 GeodeLink Devices only decode enough bits of the address to select one of *N* MSRs, where *N* is the total number of MSRs in the device. For example, if a GeodeLink Device has only 16 MSRs, then the addresses 0x2001, 0x0201, 0x0021, and 0x0x0001 all access MSR number 1, while the addresses 0x200F, 0x020F, 0x002F, and 0x0x000F all access MSR number 15.

To access a given GeodeLink Device, use Table 4-2. Note the target device addresses:

GLPCI_SB	5100xxxxh
GLIU	5101xxxxh
USB	5120xxxxh
IDE	5130xxxxh
DD	5140xxxxh
ACC	5150xxxxh
GLCP	5170xxxxh

The xxxx portion refers to the MSR addresses as they appear within Section 6.0 "Register Descriptions" on page 193. To form a complete MSR address, “OR” an address provided in a register description section with the appropriate address above.

Table 4-1. MSR Routing Conventions

Routing Field 0	Routing Field 1	Routing Field 2	Routing Field 3	Routing Field 4	Routing Field 5	Address Field
Bits [31:29]	Bits [28:26]	Bits [25:23]	Bits [22:20]	Bits [19:17]	Bits [16:14]	Bits [13:0]

Table 4-2. MSR Addresses from AMD Geode™ LX Processor

Routing Field 0	Routing Field 1	Routing Field 2	Routing Field 3	Routing Field 4	Routing Field 5	GeodeLink™ Device Target Name & Address	Comment
Bits [31:29]	**Bits [28:26]**	**Bits [25:23]**	**Bits [22:20]**	**Bits [19:17]**	**Bits [16:14]**		
These bits are shifted off to the left and never enter the CS5536.			These bits are shifted into positions [31:23] by the time they reach the CS5536. Bits in positions [22:14] are always 0 after shifting.				
010	100	010	000	000	000	GLPCI_SB 5100xxxxh	This all-zero convention indicates to the GLPCI_SB that the MSR packet coming across the PCI bus is actually for the GLCPI_SB.
010	100	010	000	Non-zero value		GLIU 5101xxxxh	This non-zero convention indicates to the GLPCI_SB that the MSR packet coming across the PCI bus should be forwarded to the GLIU. The GLIU only looks at [22:20] and hence, keeps the packet.

Downloaded from Arrow.com.

Table 4-2. MSR Addresses from AMD Geode™ LX Processor (Continued)

Routing Field 0	Routing Field 1	Routing Field 2	Routing Field 3	Routing Field 4	Routing Field 5	GeodeLink™ Device Target Name & Address	Comment
Bits [31:29]	Bits [28:26]	Bits [25:23]	Bits [22:20]	Bits [19:17]	Bits [16:14]		
These bits are shifted off to the left and never enter the CS5536.			These bits are shifted into positions [31:23] by the time they reach the CS5536. Bits in positions [22:14] are always 0 after shifting.				
010	100	010	001	Any value		Illegal	The GLIU can not send any packets back to the port it came from.
010	100	010	010	Any value		USB 5120xxxxh	
010	100	010	011	Any value		IDE 5130xxxxh	
010	100	010	100	Any value		DD 5140xxxxh	
010	100	010	101	Any value		ACC 5150xxxxh	
010	100	010	110	Any value		Not Used 5160xxxxh	The GLIU port #6 is not connected.
010	100	010	111	Any value		GLCP 5170xxxxh	

Downloaded from Arrow.com.

4.3 Typical GeodeLink™ Device

A typical or “generic” CS5536 companion device GeodeLink Device is illustrated in Figure 4-4 along with internal and external connections. The GeodeLink Device consists of the Native Block, GeodeLink Adapter, MSRs, and Clock Control Units (CCU). Each of these is discussed in the following paragraphs.

Before going into the blocks of the typical device, it should be noted that the following modules in the CS5536 companion device follow this model very closely:

- AC97 Controller (ACC)
- IDE Controller (IDE)
- Diverse Device (DD)

Specifically, they all use the GeodeLink Adapter.

The Native Block performs the “useful” work for the device. For example, in a serial port device, the transmit parallel to serial shift register is located in this block. The Native Block connects to the outside world, that is, external devices, via the I/O cells and pads. The Native Block contains registers that are manipulated by software to perform the “work”. These are operational registers that are typically manipulated by device drivers. The Native Blocks are covered in detail in the corresponding module’s register descriptions.

The GeodeLink Adapter sits between the GLIU and the Local bus. The Local bus is a traditional address/data bus supporting GeodeLink Adapter to Native Block transactions (slave transactions) and Native Block to GeodeLink Adapter transactions (master transactions). However, it is a single transaction bus in that any given slave or master transaction runs to completion before another transaction can start. This is compatible with the Native Blocks listed above (i.e., ACC, IDE, and DD), which are all single transaction devices. As suggested by Figure 4-4, the GeodeLink Adapter contains no registers and is strictly speaking, just a bridge.

The MSRs are conceptually separate from the Native Block and GeodeLink Adapter and generally provide overall GeodeLink Device configuration and control. In most designs they are physically separated as shown. There are six standard MSRs that are detailed in Section 4.7 "Standard GeodeLink™ Device MSRs" on page 74. All GeodeLink Devices have these standard MSRs. GeodeLink Devices may also incorporate additional MSRs as appropriate.

On the upper right of the figure, the connections between the GeodeLink Adapter and GLIU are illustrated. All of these signals were covered previously in Section 4.1 "GeodeLink™ Architecture Overview" on page 55.

The CCUs are a key component in the Active Hardware Clock Gating (AHCG) infrastructure. They provide the mechanism for turning off clocks to sections of logic that are *Not Busy*. Furthermore, they take an asynchronous global reset signal and synchronize it to the applicable clock domain.

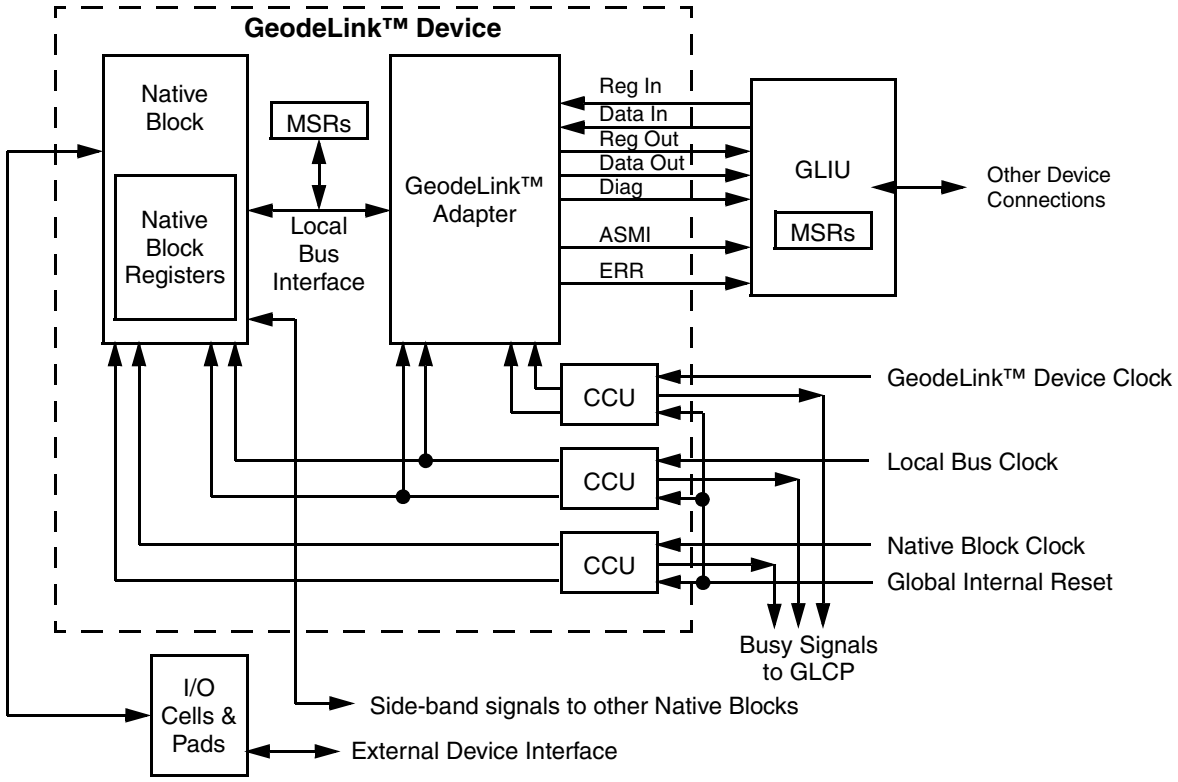

Figure 4-4. Typical AMD Geode™ CS5536 Companion Device GeodeLink™ Device

Downloaded from Arrow.com.

4.4 Clock Considerations

4.4.1 Clock Domain Definitions

Table 4-3 lists the clock sources and domains for the CS5536 companion device.

Table 4-3. Clock Sources and Clock Domains

Component Pin	Domain Name	Description
MHZ66_CLK	ATAC_LB	IDE Local bus and IDE controller core
Inverted MHZ66_CLK (Note 1)	GLIU_GLD	GLIU GeodeLink™ Device interface and related logic
	GLIU_STAT	GLIU Statistics Counters
	GLPCI_GLD	GLPCI_SB GeodeLink Device interface and related logic
	USB_GLD	USB Controller GeodeLink Device interface and related logic
	ATAC_GLD	IDE GeodeLink Device interface and related logic
	DD_GLD	DD GeodeLink Device interface and related logic
	ACC_GLD	ACC GeodeLink Device interface and related logic
	GLCP_GLD	GLCP GeodeLink Device interface and related logic
	OHC_HCLK	USB OHC controller 66 MHz GeodeLink clock
	EHC_HCLK	USB EHC controller 66 MHz GeodeLink clock
	UDC_HCLK	USB device controller 66 MHz GeodeLink clock
	OTC_HCLK	USB Option controller clock
MHZ66_CLK divided by two (Note 2)	ACC_LB	ACC Local bus interface and related logic
PCI_CLK	GLPCI_TRNA	GLPCI_SBtransaction processing
	GLPCI_INTF	GLPCI_SB interface to PCI bus
	GLCP_PCI	GLCP PCI related logic
MHZ48_CLK	USB_COR48	USB controller core logic
MHZ48_CLK divided by two (Note 2)	SMB_COR	SMB Controller core logic
	UART1_COR	UART1 core logic
	UART2_COR	UART2 core logic
LPC_CLK	DD_LB	DD Local bus interface and related logic; Includes PIC
	LPC_COR	LPC Controller core logic
	PIT_COR	PIT core logic
	DMA_COR	8237 DMA core logic
AC_CLK	ACC_COR	ACC core logic
MHZ14_CLK (Note 3)	MFGPT_COR_14M	MFGPT core logic14 MHz clock
	PMC_SLP	Power Management Controller Sleep logic
	PIT_REF	Programmable Interval Timer reference clock
KHZ32_XCI (Note 3)	RTC_COR	RTC core logic
	MFGPT_COR_32K	MFGPT core logic 32 KHz clock
	MFGPT_COR_32K_S	MFGPT 32 KHz clock source; Standby power domain
	PMC_STB	PMC Standby logic; Standby power domain
	GPIO_COR	GPIO core logic
	GPIO_COR_S	GPIO core logic; Standby power domain
TCK (Note 3)	TAP_CNTRL	JTAG TAP Controller clock source
(Note 4)	GLCP_DBG	GLCP debug logic

Note 1. The MHZ66_CLK is first inverted and then fed to all these domains.
Note 2. Each domain receives the referenced clock and performs the divide just before the CCU.
Note 3. This clock differs from other clocks in this table in that this clock does not utilize a CCU nor is it subject to GLCP control or power management control.
Note 4. This logic does not have a fixed clock source. During debug it is switched to the clock domain of interest. It does have a CCU.

Downloaded from Arrow.com.

4.4.2 Clock Controls and Setup

Each of the clock domains listed in Table 4-3 on page 63 is subject to various GLCP controls and status registers except those with “Note 3”. The following registers, which control those clocks, and a brief description of each is provided:

- **GLCP Clock Active (GLCP_CLKACTIVE), MSR 51700011h:** A 1 indicates the corresponding clock is active. This is a read only register.
- **GLCP Clock Control (GLCP_CLKOFF), MSR 51700010h:** A 1 indicates the corresponding clock is to be disabled immediately and unconditionally. Not normally used operationally. Debug only.
- **GLCP Clock Mask for Debug Clock Stop Action (GLCP_CLKDISABLE), MSR 51700012h:** A 1 indicates the corresponding clock is to be disabled by debug logic via a debug event or trigger. Not normally used operationally. Debug only.
- **GLCP Clock Active Mask for Suspend Acknowledge (GLCP_CLK4ACK), MSR 51700013h:** A 1 indicates the corresponding clock is to be monitored during a power management Sleep operation. When all the clocks with associated 1s go inactive, the GLCP sends a Sleep Acknowledge to the Power Management Controller. This register is used during Sleep sequences and requires the CLK_DLY_EN bit in GLCP_GLB_PM (MSR 5170000Bh[1]) to be 0.
- **GLCP Clock Mask for Sleep Request (GLCP_PMCLKDISABLE), MSR 51700009h:** A 1 indicates the corresponding clock is to be disabled unconditionally during a power management Sleep operation. Clocks are disabled when the GLCP completes all of its Sleep Request operations and sends a Sleep Acknowledge to the Power Management Controller.

All of the registers above have the same layout, where each bit is associated with a clock domain. The layout and recommended operating values for the registers is provided in Table 6-76 "Clock Mapping / Operational Settings" on page 566.

4.4.2.1 Additional Setup Operations

- **GLCP Debug Clock Control (GLCP_DBGCLKCTL), MSR 51700016h:** Set all bits to 0. This turns off all clocks to debug features; not needed during normal operation.
- **GLCP Global Power Management Control (GLCP_GLB_PM), MSR 5170000Bh:** Set all bits to 0. This disables the use of the fixed delay in GLCP_CLK_DIS_DELAY and enables the use of GLCP_CLK4ACK.
- **GLCP Clock Disable Delay Value (GLCP_CLK_DIS_DELAY), MSR 51700008h:** Set all bits to 0. Since use of this register is disabled by setting all GLCP_DBGCLKCTL bits to 0, the actual value of this register is a “don’t care”; it is set here for completeness. If use of GLCP_CLK_DIS_DELAY is desired, set the CLK_DLY_EN bit in GLCP_GLB_PM (MSR 5170000Bh[1] = 1). This will disable the use of GLCP_CLK4ACK and shut off the clocks in GLCP_PMCLKDISABLE after the GLCP_CLK_DIS_DELAY expires. This delay is measured in PCI clock edges.

4.5 Reset Considerations

The elements that affect “reset” within the CS5536 companion device are illustrated in Figure 4-5 on page 66. The following points are significant:

- Signals denoted in upper case (i.e., all capitals) are external pins. Signals denoted in lower case are internal signals.
- There are separate resets for the Working power domain (RESET_WORK#) and the Standby power domain (RESET_STAND#).
- All elements in the figure are within the Standby power domain and operate off the KHZ32_CLK.
- The TAP Controller is in the Working power domain, but it may be reset separately from the other Working domain logic.
- Any time the CS5536 companion device is in the Standby state, the Working power domain is unconditionally and immediately driven into reset.
- Any faulted event or external reset input forces the CS5536 companion device into the Standby state.
- External reset (RESET_OUT#) is always asserted immediately with internal working domain reset, but is de-asserted subject to a programmable delay. RESET_OUT# asserts without any clocks but requires the KHZ32_CLK for the delay and the PCI_CLK to de-assert.
- IDE_RESET# is always asserted immediately with internal working domain reset and de-asserts when the IDE controller comes out of reset, that is, within a few MHZ66_CLK edges of internal reset de-assert.
- LVD monitors V_{CORE} and only asserts power_good_working when V_{CORE} is within normal operating range.
- LVD monitors V_{CORE_VSB} and V_{IO_VSB} along with RESET_STAND#. The assertion of power_good_standy only occurs when the voltages are within normal operating range and RESET_STAND# is high (de-asserted).

Downloaded from Arrow.com.

When power is applied to the CS5536 companion device from a completely cold start, that is, no Standby or Working power, both RESET_STAND# and RESET_WORK# are applied. Alternatively, one or both of the reset inputs may be tied to Standby I/O power (V_{IO_VSB}), and the LVD circuit will generate internal Power Good Working and internal Power Good Standby. Assuming the LVD circuit is enabled (LVD_EN# pin tied low), Power Good Standby will assert until proper Standby voltages have been achieved and RESET_STAND# has been de-asserted.

RESET_OUT# is de-asserted synchronous with the low-to-high edge of PCI_CLK. The de-assertion is delayed from internal_reset using a counter in the Power Management Controller. This counter is driven by the 32 KHz clock and is located in the Standby power domain. The value of the counter is programmable but defaults to 0x0_0100 (256 edges). 31.25 µs per edge times 256 equals an 8 ms delay. Note this counter default is established by RESET_STAND# and is not effected by RESET_WORK#. Therefore, the delay value may be changed and then the system can be reset with the new value.

Note the special consideration for TAP Controller reset. When boundary scan is being performed, internal component operation is not possible due to the scanning signals on the I/Os. Under this condition, it is desirable to hold the component internals in reset while the boundary scan is being performed by the TAP Controller. However, under normal operation, it is desirable to reset the TAP Controller with the other logic in the Working domain during power management sequences.

Achieving these dual goals is accomplished as follows:

For boundary scan:

- Assert RESET_STAND#, causing internal power_good_standby to go low. This causes the complete component to reset, except for the TAP Controller. Keep this input held low throughout boundary scan operations.
- Assert and de-assert RESET_WORK# as needed to reset the TAP Controller.

For normal operation:

- The internal Power Good Standby will be high, meaning the TAP Controller reset asserts any time the Standby state is active or anytime RESET_WORK# is active.

Downloaded from Arrow.com.

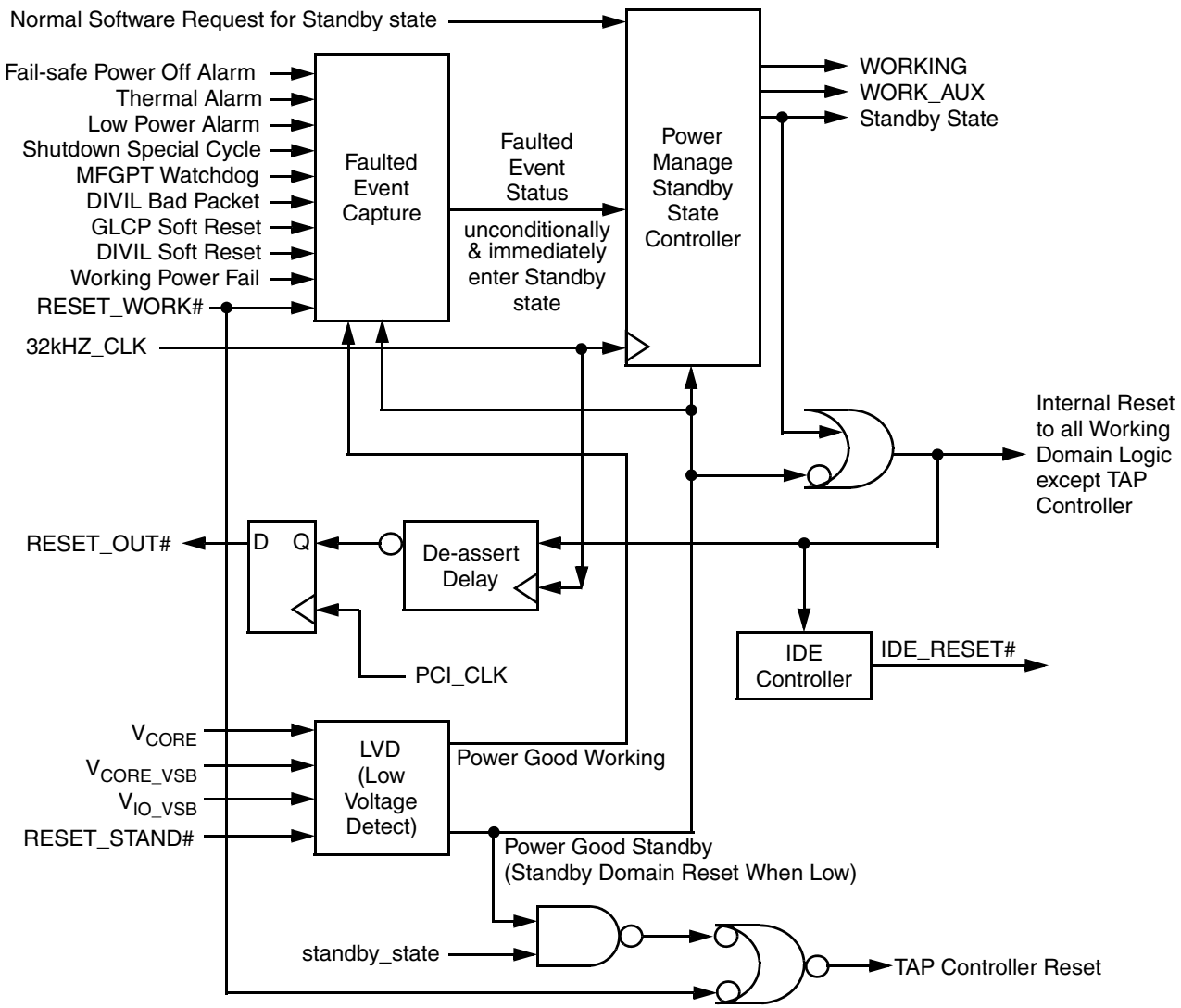

Figure 4-5. Reset Logic

Downloaded from Arrow.com.

4.6 Memory and I/O Map Overview

4.6.1 Introduction

There are several places in the CS5536 companion device where addresses are decoded and routed:

- Physical PCI Bus. The GLPCI_SB decodes PCI bus transactions and claims them with a “DEVSEL#” as appropriate. After claiming a transaction, the GLPCI_SB converts it to a GLIU request packet. It then passes the request to the GLIU. It has no routing control or responsibility beyond this point.
- GLIU. The GLIU compares the request addresses against the descriptor settings. It passes the request to the port associated with the compare hit. Each port is connected to a specific GeodeLink Device (see Section 4.1.5 "Topology" on page 58 for port assignment). There are also specific legacy addresses that receive “special” routing beyond the standard descriptor routing mechanisms.
- Typical GeodeLink Device. For most GeodeLink Devices, further decoding is minimal. If a device contains only MSRs and a single Native Block (register group) in I/O or memory space, specific bits within the request packet can be used to easily select between the two. If a device contains more than one register group, a Local Base Address Register (LBAR) for each group is used. Like a PCI Base Address Register (BAR), an LBAR compare and hit operation is used to select the desired group.
- Diverse Device. The Diverse Device has the same decoding responsibilities as a typical GeodeLink Device. Beyond this programmable LBAR decoding, it has substantial fixed decoding associated with legacy addresses.

4.6.2 PCI Bus Decoding

From reset, the GLPCI_SB does not actively decode any cycle. However, it does subtractively decode all cycles. From reset, any cycle not positively claimed on the PCI bus is converted to a GLIU request and passed to the GLIU.

Using appropriate setup registers, the GLPCI_SB can be programmed to actively decode selected I/O and memory regions. Other than actively claiming, the “convert” and “pass” operation is the same.

There are control bits in GLPCI_CTL (MSR 51700010h) to regulate behavior associated with legacy addresses:

- Bits [12:11]: Legacy I/O Space Active Decode. These bits control the degree to which the GLPCI_SB actively claims I/O region 0000h through 03FFh:
  - 00: Subtractive – Claim on fourth clock. (Default.)
  - 01: Slow – Claim on third clock.
  - 10: Medium – Claim on second clock.
- Bit 13: Reject Primary IDE. If this bit is set, the GLPCI_SB will not actively decode the primary IDE addresses of 01F0h/01F7h and 03F6h.
- Bit 14: Reject Secondary IDE. If this bit is set, the GLPCI_SB will not actively decode the secondary IDE addresses of 0170h/0177h and 0376h.
- Bit 15: Reject DMA High Page Active. If this bit is set, the GLPCI_SB will not actively decode the I/O range 0480h/048Fh associated with the DMA High Page registers.

For further details on the GLPCI_CTL register see Section 6.2.2.1 "Global Control (GLPCI_CTRL)" on page 229.

Lastly, there is an “MSR Access Mailbox” located in PCI Configuration register space. It consists of the following 32-bit registers:

- MSR Address (PCI Index F4h). Full MSR routing path in the upper portion plus 14 device address bits in the lower portion.
- MSR Data Low (PCI Index F8h). Bits [31:0]: When read, an MSR cycle is generated. The 64-bit read returns the low 32 bits and saves the upper 32 bits for a read to “Data High”. A write holds the value written as the current “Data Low”.
- MSR Data High (PCI Index FCh). Bits [63:32]: Reads return the upper 32 bits of the last MSR value read. Writes generate an MSR write cycle using the current value and the “Data Low” value.

For further details on the MSR Access Mailbox see Section 6.2.3 "PCI Configuration Registers" on page 234.

4.6.3 GLIU Decoding

From reset, the GLIU passes all request packets to the Diverse Device, except for the legacy primary IDE addresses (01F0h/01F7h and 03F6h), these are passed to the IDE device in the IDE controller. There is a GLIU IOD_SC descriptor to control this primary IDE behavior and it defaults configured (see Section 6.1.4.2 "IOD Swiss Cheese Descriptors (GLIU_IOD_SC[x])" on page 220). If this descriptor is disabled, all requests pass to the Diverse Device.

Using appropriate MSR setup registers (descriptors), the GLIU can be programmed to route selected I/O and memory regions to specific GeodeLink Devices. Any memory or I/O address that do not hit one of these regions, subtractively routes to the Diverse Device. Unlike PCI, there is no performance loss associated with being the subtractive port.

Operationally, there are four bus masters within the CS5536 companion device: IDE, ACC, DD, and USB. These masters only generate requests to access main memory off the AMD Geode LX processor. Therefore, all their GLIU requests must be routed to the GLPCI_SB for presentation to the PCI bus. A set of GLIU P2D_BM descriptors could be used for this purpose. However, the CS5536 companion device GLIU is uniquely modified to

Downloaded from Arrow.com.

route all requests for the listed masters to the GLPCI_SB unconditionally. Therefore, GLIU P2D_BM settings do not affect packet routing from the listed masters. GLIU descriptors are only used to route requests from the GLPCI_SB and GLCP.

4.6.4 Legacy Keyboard Emulation

In the CS5536 companion device, a USB Controller supports an Open Host Controller Interface. The USB control registers are memory mapped. The memory region associated with these registers is relocatable via standard GLIU descriptor MSRs starting at an appropriate base address. The region size is 4 KB (1000h), that is, an offset range of 000h through FFFh. There are four registers called: HceControl, HceInput, HceOutput, and HceStatus. There are no USB control registers above this region.

Special consideration is given to the legacy keyboard emulation control registers normally associated with the USB Controller. The keyboard emulation registers are located at the USB Open Host Controller base address plus 0100h.

The Keyboard Emulation Logic (KEL) hardware is located in the Diverse Device (DD) module, where it can be closely coordinated with a possible real keyboard controller in any of the two locations: in either the USB Controller or on the LPC bus. This leaves the problem of the control registers that are physically in the DD, but logically (from the software perspective) in the USB Controller.

A descriptor type is incorporated into the CS5536 companion device to deal with this keyboard issue. It is a variant of the standard “P2D Base Mask Descriptor” (P2D_BM) called P2D_BMK (keyboard). A P2D_BMK descriptor does additional decoding based on Address bit 8. If this bit is low, the hit directs to the USB port. If this bit is high, the hit directs to the subtractive port. (see Section 6.1.2.2 "P2D Base Mask KEL Descriptors (GLIU_P2D_BMK[x])" on page 204).

4.6.5 GeodeLink™ Device Decoding Except Diverse Device

Table 4-4 shows the register space map for all CS5536 devices except the Diverse Device. There are no fixed addresses associated with these devices other than the MSRs and the legacy IDE I/O addresses as detailed in Section 4.6.3 "GLIU Decoding" on page 67.

4.6.6 Diverse Device Decoding Except Legacy I/O

The Diverse Device register space map, except legacy I/O, is shown in Table 4-5 on page 69.

Table 4-4. AMD Geode™ CS5536 Companion Device Register Space Map Except Diverse Device

Device	MSR Space (Note 1)	I/O Space	Memory Space
GLPCI_SB	Standard GeodeLink™ Device MSRs plus GLPCI_SB setup. All MSRs also accessible from PCI Configuration space.	None.	None.
GLCP	Standard GeodeLink™ Device MSRs plus diagnostic and debug.	None.	None.
GLIU	Standard GeodeLink™ Device MSRs plus descriptor setup.	Programmable SSMIs.	Programmable SSMIs.
ACC	Standard GeodeLink Device MSRs.	16-byte codec interface plus a 48-byte master interface. All trap registers removed. Generates no SSMIs.	The register space can be here also.
IDE	Standard GeodeLink™ Device MSRs plus timing parameters. Bus Master LBAR.	Legacy primary addresses. 16-byte master interface.	None.
USB	Standard GeodeLink™ Device MSRs plus base address registers to differential the Open Host Controller Interface, the Option Controller, the Enhanced Host Controller Interface and the Device Controller.	None.	4 KB for each of the four controllers. Keyboard emulation registers to Diverse Device.

Note 1. See Section 4.7 "Standard GeodeLink™ Device MSRs" on page 74 for register descriptions.

Downloaded from Arrow.com.

Table 4-5. Diverse Device Space Map Except Legacy I/O

Device	MSR Space (Note 1)	I/O Space	Memory Space
DD	Standard GeodeLink™ Device MSRs plus: SMB LBAR, ACPI LBAR, PM LBAR, GPIO LBAR, MFGPT LBAR, NAND LBAR, KEL LBAR, KEL LBAR, IRQ Mapper LBAR, Legacy Controls, DMA Mappers, Shadow Registers, LPC Controls, and Memory Mask. NOR Flash address control.	Located by associated LBAR. Defaults disabled. 008 Bytes SMB, 016 Bytes ACPI, 064 Bytes PM Support, 256 Bytes GPIO and ICFs, 064 Bytes MFGPTs, 016 Bytes NAND Flash, and 032 Bytes IRQ Mapper. All I/O that does not hit one of the items above and does not hit a legacy address, is directed to the LPC bus.	16-Byte KEL Host Controller register set at LBAR. Defaults disabled. NOR Flash per LBAR. All other memory accesses are directed to the LPC bus.

Note 1. See Section 4.7 "Standard GeodeLink™ Device MSRs" on page 74 for register descriptions.

4.6.7 Legacy I/O Decoding

Table 4-6 details the legacy I/O range for 000h through 4FFh. Each I/O location has a read/write (R/W) capability. Note the following abbreviations:

--- Unknown or can not be determined.

Yes Read and write the register at the indicated location. No shadow required.

WO Write only. Value written can not be read back. Reads do not contain any useful information.

RO Read only. Writes have no effect.

Shw The value written to the register can not be read back via the same I/O location. Read back is accomplished via a “Shadow” register located in MSR space.

Shw@ Reads of the location return a constant or meaningless value.

Shw$ Reads of the location return a status or some other meaningful information.

Rec Writes to the location are “recorded” and written to the LPC. Reads to the location return the recorded value. The LPC is not read.

Table 4-6. Legacy I/O: 000h-4FFh

I/O Addr.	Function	Size	R/W	Comment
000h	Slave DMA Address - Channel 0	8-bit	Yes	16-bit values in two transfers.
001h	Slave DMA Counter - Channel 0	8-bit	Yes	16-bit values in two transfers.
002h	Slave DMA Address - Channel 1	8-bit	Yes	16-bit values in two transfers.
003h	Slave DMA Counter - Channel 1	8-bit	Yes	16-bit values in two transfers.
004h	Slave DMA Address - Channel 2	8-bit	Yes	16-bit values in two transfers.
005h	Slave DMA Counter - Channel 2	8-bit	Yes	16-bit values in two transfers.
006h	Slave DMA Address - Channel 3	8-bit	Yes	16-bit values in two transfers.
007h	Slave DMA Counter - Channel 3	8-bit	Yes	16-bit values in two transfers.
008h	Slave DMA Command/Status - Channels [3:0]	8-bit	Shw$	
009h	Slave DMA Request - Channels [3:0]	8-bit	WO	Reads return value B2h.
00Ah	Slave DMA Mask - Channels [3:0]	8-bit	Shw@	Reads return value B2h.
00Bh	Slave DMA Mode - Channels [3:0]	8-bit	Shw@	Reads return value B2h.
00Ch	Slave DMA Clear Pointer - Channels [3:0]	8-bit	WO	Reads return value B2h.
00Dh	Slave DMA Reset - Channels [3:0]	8-bit	WO	Reads return value B2h.

Downloaded from Arrow.com.

Table 4-6. Legacy I/O: 000h-4FFh (Continued)

I/O Addr.	Function	Size	R/W	Comment
00Eh	Slave DMA Reset Mask - Channels [3:0]	8-bit	Shw@	Reads return value B2h.
00Fh	Slave DMA General Mask - Channels [3:0]	8-bit	Shw@	Reads return value B2h.
010h-01Fh	No Specific Usage	---	---	
020h	PIC Master - Command/Status	8-bit	Shw$	
021h	PIC Master - Command/Status	8-bit	Shw$	
022h-03Fh	No Specific Usage	---	---	
040h	PIT – System Timer	8-bit	Shw$	
041h	PIT – Refresh Timer	8-bit	Shw$	
042h	PIT – Speaker Timer	8-bit	Shw$	
043h	PIT – Control	8-bit	Shw$	
044h-05Fh	No Specific Usage	---	---	
060h	Keyboard/Mouse - Data Port	8-bit	Yes	If KEL Memory Offset 100h[0] = 1 (EmulationEnable bit).
				If MSR 5140001Fh[0] = 1 (SNOOP bit) and KEL Memory Offset 100h[0] = 0 (EmulationEnable bit).
061h	Port B Control	8-bit	Yes	
062h-063h	No Specific Usage	---	---	
064h	Keyboard/Mouse - Command/ Status	8-bit	Yes	If KEL Memory Offset 100h[0] = 1 (EmulationEnable bit).
				If MSR 5140001Fh[0] = 1 (SNOOP bit) and KEL Memory Offset 100h[0] = 0 (EmulationEnable bit).
065h-06Fh	No Specific Usage	---	---	
070h-071h	RTC RAM Address/Data Port	8-bit	Yes	Options per MSR 51400014h[0]. (Note 1)
072h-073h	High RTC RAM Address/Data Port	8-bit	Yes	Options per MSR 51400014h[1].
074h-077h	No Specific Usage	---	---	
078h-07Fh	No Specific Usage	---	---	
080h	Post Code Display	8-bit	Rec	Write LPC and DMA. Read only DMA.
081h	DMA Channel 2 Low Page	8-bit	Rec	Upper addr bits [23:16]. Write LPC and DMA. Read only DMA.
082h	DMA Channel 3 Low Page			
083h	DMA Channel 1 Low Page			
084h-086h	No Specific Usage	8-bit	Rec	Write LPC and DMA. Read only DMA.

Downloaded from Arrow.com.

Table 4-6. Legacy I/O: 000h-4FFh (Continued)

I/O Addr.	Function	Size	R/W	Comment
087h	DMA Channel 0 Low Page	8-bit	Rec	Upper addr bits [23:16]. Write LPC and DMA. Read only DMA.
088h	No Specific Usage	8-bit	Rec	Write LPC and DMA. Read only DMA.
089h	DMA Channel 6 Low Page	8-bit	Rec	Upper addr bits [23:16]. Write LPC and DMA. Read only DMA.
08Ah	DMA Channel 7 Low Page			
08B	DMA Channel 5 Low Page			
08Ch-08Eh	No Specific Usage	8-bit	Rec	Write LPC and DMA. Read only DMA.
08Fh	DMA C4 Low Page	8-bit	Rec	Upper addr bits [23:16]. See comment at 080h.
090h-091h	No Specific Usage	---	---	
092h	Port A	8-bit	Yes	If kel_porta_en is enabled, then access Port A; else access LPC.
093h-09Fh	No Specific Usage	---	---	
0A0h	PIC Slave - Command/Status	8-bit	Shw$	
0A1h	PIC Slave - Command/Status	8-bit	Shw$	
0A2h-0BFh	No Specific Usage	8-bit	---	
0C0h	Master DMA Address - Channel 4	8-bit	Yes	16-bit values in two transfers.
0C1h	No Specific Usage	8-bit	---	
0C2h	Master DMA Counter - Channel 4	8-bit	Yes	16-bit values in two transfers.
0C3h	No Specific Usage	8-bit	---	
0C4h	Master DMA Address - Channel 5	8-bit	Yes	16-bit values in two transfers.
0C6h	Master DMA Counter - Channel 5	8-bit	Yes	16-bit values in two transfers.
0C7h	No Specific Usage	8-bit	---	
0C8h	Master DMA Address - Channel 6	8-bit	Yes	16-bit values in two transfers.
0CAh	Master DMA Counter - Channel 6	8-bit	Yes	16-bit values in two transfers.
0CBh	No Specific Usage	8-bit	---	
0CCh	Master DMA Address - Channel 7	8-bit	Yes	16-bit values in two transfers.
0CDh	No Specific Usage	8-bit	---	
0CEh	Master DMA Counter - Channel 7	8-bit	Yes	16-bit values in two transfers.
0CFh	No Specific Usage	8-bit	---	
0D0h	Master DMA Command/Status - Channels [7:4]	8-bit	Shw$	
0D1h	No Specific Usage	8-bit	---	
0D2h	Master DMA Request - Channels [7:4]	8-bit	WO	
0D3h	No Specific Usage	8-bit	---	
0D4h	Master DMA Mask - Channels [7:4]	8-bit	Yes	
0D5h	No Specific Usage	8-bit	---	

Downloaded from Arrow.com.

Table 4-6. Legacy I/O: 000h-4FFh (Continued)

I/O Addr.	Function	Size	R/W	Comment
0D6h	Master DMA Mode - Channels [7:4]	8-bit	Shw@	
0D7h	No Specific Usage	8-bit	---	
0D8h	Master DMA Clear Pointer - Channels [7:4]	8-bit	WO	
0D9h	No Specific Usage	8-bit	---	
0DAh	Master DMA Reset - Channels [7:4]	8-bit	WO	
0DBh	No Specific Usage	8-bit	---	
0DCh	Master DMA Reset Mask - Channels [7:4]	8-bit	WO	
0DDh	No Specific Usage	8-bit	---	
0DEh	Master DMA General Mask - Channels [7:4]	8-bit	Shw@	
0DFh	No Specific Usage	8-bit	---	
0E0h-2E7h	No Specific Usage	---	---	
2E8h-2EFh	UART/IR - COM4	8-bit	---	MSR bit enables/disables into I/O space.(UART1 MSR 51400014h[18:16], UART2 MSR 51400014h[22:20]). Defaults to LPC.
2F0h-2F7h	No Specific Usage	---	---	
2F8h-2FFh	UART/IR - COM2	8-bit	---	MSR bit enables/disables into I/O space.(UART1 MSR 51400014h[18:16], UART2 MSR 51400014h[22:20]). Defaults to LPC.
300h-36Fh	No Specific Usage	---	---	
370h	Floppy Status R A	8-bit	RO	Second Floppy.
371h	Floppy Status R B	8-bit	RO	Second Floppy.
372h	Floppy Digital Out	8-bit	Shw@	Second Floppy.
373h	No Specific Usage	8-bit	---	
374h	Floppy Cntrl Status	8-bit	RO	Second Floppy.
375h	Floppy Data	8-bit	Yes	Second Floppy.
376h	No Specific Usage	8-bit	---	
377h	Floppy Conf Reg	8-bit	Shw$	Second Floppy.
378h-3E7h	No Specific Usage	---	---	
3E8h-3EFh	UART/IR - COM3	8-bit	---	MSR bit enables/disables into I/O space.(UART1 MSR 51400014h[18:16], UART2 MSR 51400014h[22:20]). Defaults to LPC.
3F0h	Floppy Status R A	8-bit	RO	First Floppy.
3F1h	Floppy Status R B	8-bit	RO	First Floppy.
3F2h	Floppy Digital Out	8-bit	Shw@	First Floppy.

Downloaded from Arrow.com.

Table 4-6. Legacy I/O: 000h-4FFh (Continued)

I/O Addr.	Function	Size	R/W	Comment
3F3h	No Specific Usage	8-bit	---	
3F4h	Floppy Cntrl Status	8-bit	RO	First Floppy.
3F5h	Floppy Data	8-bit	Yes	First Floppy.
3F6h	No Specific Usage	8-bit	---	
3F7h	Floppy Conf Reg	8-bit	Shw$	First Floppy.
3F8h-3FFh	UART/IR - COM1	8-bit	---	MSR bit enables/disables into I/O space.(UART1 MSR 51400014h[18:16], UART2 MSR 51400014h[22:20]). Defaults to LPC.
400h-47Fh	No Specific Usage	---	---	
480h	No Specific Usage	8-bit	WO	Write LPC and DMA. Read only DMA.
481h	DMA Channel 2 High Page	8-bit	Rec	Upper addr bits [31:24]. Write LPC and DMA. Read only DMA.
482h	DMA Channel 3 High Page			
483h	DMA Channel 1 High Page			
484h-486h	No Specific Usage	8-bit	WO	Write LPC and DMA. Read only DMA.
487h	DMA Channel 0 High Page	8-bit	Rec	Upper addr bits [31:24]. Write LPC and DMA. Read only DMA.
488h	No Specific Usage	8-bit	WO	Write LPC and DMA. Read only DMA.
489h	DMA Channel 6 High Page	8-bit	Rec	Upper addr bits [31:24]. Write LPC and DMA. Read only DMA.
48Ah	DMA Channel 7 High Page			
48Bh	DMA Channel 5 High Page			
48Ch-48Eh	No Specific Usage	8-bit	WO	Write LPC and DMA. Read only DMA.
48Fh	DMA Channel 4 High Page	8-bit	Rec	Upper addr bits [31:24]. Write LPC and DMA. Read only DMA.
490h-4CFh	No Specific Usage	---	---	
4D0h	PIC Level/Edge	8-bit	Yes	IRQ0-IRQ 7.
4D1h	PIC Level/Edge	8-bit	Yes	IRQ8-IRQ15.
4D2h-4FFh	No Specific Usage	---	---	

Note 1. The Diverse Device snoops writes to this port and maintains the MSB as NMI enable. When low, NMI is enabled. When high, NMI is disabled. This bit defaults high. Reads of this port return bits [6:0] from the on-chip or off-chip target, while bit 7 is returned from the “maintained” value.

Downloaded from Arrow.com.

4.7 Standard GeodeLink™ Device MSRs

All GeodeLink™ Devices have the following Standard MSRs and are always located at the addresses indicated below from the base address given in Table 4-2 "MSR Addresses from AMD Geode™ LX Processor" on page 60:

- MSR Address 0: GeodeLink Device Capabilities (GLD_MSR_CAP)
- MSR Address 1: GeodeLink Device Master Configuration (and GLA Prefetch) (GLD_MSR_CONFIG)
- MSR Address 2: GeodeLink Device System Management Interrupt Control (GLD_MSR_SMI)
- MSR Address 3: GeodeLink Device Error Control (GLD_MSR_ERROR)
- MSR Address 4: GeodeLink Device Power Management (GLD_MSR_PM)
- MSR Address 5: GeodeLink Device Diagnostic MSR (GLD_MSR_DIAG) (This register is reserved for internal use by AMD and should not be written to.)

4.7.1 MSR Address 0: Capabilities

The Capabilities MSR (GLD_MSR_CAP) is read only and provides identification information as illustrated Table 4-7.

4.7.2 MSR Address 1: Master Configuration

The defined fields in the GeodeLink Device Master Configuration MSR (GLD_MSR_CONF) vary depending upon the device. Refer to the appropriate GeodeLink Device register chapter starting in Section 6.0 "Register Descriptions" on page 193 for descriptions.

4.7.3 MSR Address 2: SMI Control

Each GeodeLink Device within the CS5536 companion device incorporates System Management Interrupts (SMIs). These SMIs are controlled via the Standard GLD_MSR_SMI located at MSR Address 2 within each GeodeLink Device (see Table 4-8). The lower 32 bits of this register contain *Enable* (EN) bits, while the upper 32 bits contain *Flag* (FLAG) bits. The EN and FLAG bits are organized in pairs of (n, n+32). For example: (0,32); (1,33); (2,34); etc. The GLD_MSR_SMI is used to control and report *events*.

An *event* is any action or occurrence within the GeodeLink Device requiring processor attention. The FLAG bits are status bits that record events. The EN bits enable events to be recorded. An EN bit must be 1 for an event to be recorded (with the exception of the GLUI and the GLCP - the EN bit must be 0 for an event to be recorded). When an event is recorded, the associated FLAG bit is set to a 1. SMI events are of two types: Asynchronous SMI (ASMI) and Synchronous SMI (SSMI).

Table 4-7. GLD_MSR_CAP Bit Descriptions

Bit	Name	Description
63:24	RSVD	**Reserved.** Reads as 0.
23:8	DEV_ID	**Device ID.** Identifies the module.
7:0	REV_ID	**Revision ID.** Identifies the module revision.

Table 4-8. Standard GLD_MSR_SMI Format

63	62	61	60	59	58	57	56	55	54	53	52	51	50	49	48	47	46	45	44	43	42	41	40	39	38	37	36	35	34	33	32
SMI_FLAG	SMI_FLAG	SMI_FLAG	SMI_FLAG	SMI_FLAG	SMI_FLAG	SMI_FLAG	SMI_FLAG	SMI_FLAG	SMI_FLAG	SMI_FLAG	SMI_FLAG	SMI_FLAG	SMI_FLAG	SMI_FLAG	SMI_FLAG	SMI_FLAG	SMI_FLAG	SMI_FLAG	SMI_FLAG	SMI_FLAG	SMI_FLAG	SMI_FLAG	SMI_FLAG	SMI_FLAG	SMI_FLAG	SMI_FLAG	SMI_FLAG	SMI_FLAG	SMI_FLAG	SMI_FLAG	SMI_FLAG
31	**30**	**29**	**28**	**27**	**26**	**25**	**24**	**23**	**22**	**21**	**20**	**19**	**18**	**17**	**16**	**15**	**14**	**13**	**12**	**11**	**10**	**9**	**8**	**7**	**6**	**5**	**4**	**3**	**2**	**1**	**0**
SMI_EN	SMI_EN	SMI_EN	SMI_EN	SMI_EN	SMI_EN	SMI_EN	SMI_EN	SMI_EN	SMI_EN	SMI_EN	SMI_EN	SMI_EN	SMI_EN	SMI_EN	SMI_EN	SMI_EN	SMI_EN	SMI_EN	SMI_EN	SMI_EN	SMI_EN	SMI_EN	SMI_EN	SMI_EN	SMI_EN	SMI_EN	SMI_EN	SMI_EN	SMI_EN	SMI_EN	SMI_EN

Downloaded from Arrow.com.

4.7.3.1 ASMI

ASMIs fall into two classes: *direct* and *in-direct*.

A behavioral model for a direct class ASMI is illustrated in Figure 4-6. In the model, an event is represented as a short duration (much less than 1 µs) positive pulse that is associated with a given *Enable/Event pair n*. The Enable/Event pair is represented by a pair of simple "D" flip/flops that can be *set* (write 1 to Q) or cleared (write 0 to Q) by software. The EN bit can be written high or low, but the FLAG bit can only be cleared. By GeodeLink architecture convention, writing 1 to a FLAG bit clears it; writing 0 has no effect. If the EN bit is 1, then the 0-to-1 transition of the event pulse clocks a 1 into the SMI FLAG flip/flop.

All of the ASMI bits are ORed together to form the *GeodeLink Device ASMI*. The GeodeLink Device ASMI is routed through the GLIU where it is ORed with all other device ASMIs to form the CS5536 companion device ASMI.

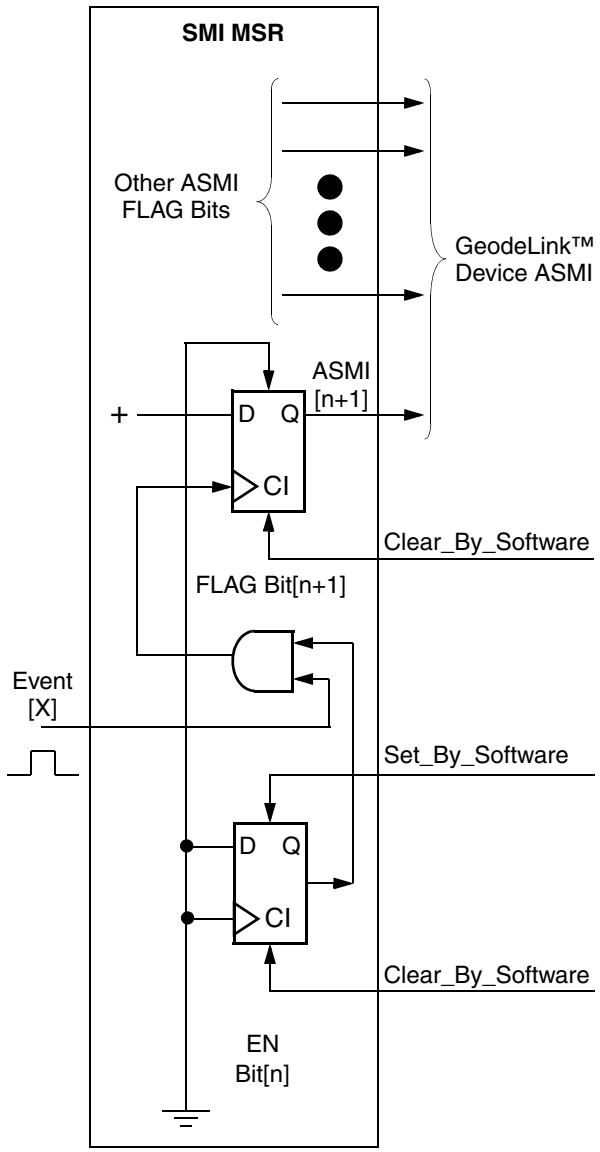

Figure 4-6. Direct ASMI Behavioral Model

A behavioral model for an in-direct class ASMI is illustrated in Figure 4-7 on page 76. An event is represented as before, but it is first applied to some type of *Native Event* register. Generally, this is an IRQ status register of some kind that records multiple IRQ sources. Alternatively, there might be multiple independent Native Event registers that are at some point ORed together to form a single *Native Event Summary Signal* (NESS). In general, a NESS can also be an IRQ signal routed to the PIC device. Hence, depending on operational needs, a NESS can be an IRQ or ASMI.

The important point is that the NESS 0-to-1 transition clocks a 1 into the SMI FLAG flip/flop. The event only in-directly causes the SMI FLAG bit to be set. Further note that the Event[X] and ASMI[n+1] are independently clearable. ASMI[n+1] can be cleared, while leaving NESS at a 1 state. After such clearing action with NESS high, ASMI[n+1] will not set again. Alternatively, Event[X] could be cleared without effecting the state of ASMI[n+1].

Lastly, it is possible to clear and set ASMI[n+1] while NESS remains at a constant high state. Consider the following sequence:

1) Assume EN[n] is high.
2) Event[X] occurs and NESS makes a 0-to-1 transition that sets ASMI[n+1].
3) Software clears ASMI[n+1] by writing a 1 to it.
4) NESS remains high because Event[X] has not been cleared.
5) EN[n] is cleared to 0.
6) EN[n] is set to a 1 and causes ASMI[n+1] to be set again.

Note: Step 5 could also be performed between steps 2 and 3 instead, yielding the same result. The sequence of setting EN[n] to 0 followed by setting EN[n] to 1 is called an *Enable Toggle*.

The previous sequence is used when multiple events X, Y, Z, etc. all OR to form a single NESS. The events are sharing a single NESS. Under this arrangement, the following Virtual System Architecture™ (VSA) software sequence would be typical:

1) Assume EN[n] is high.
2) Event[X] fires and causes a CS5536 companion device ASMI.
3) VSA searches the AMD Geode LX processor/CS5536 system looking for the ASMI source and finds ASMI[n+1].
4) VSA clears EN[n] to 0 and begins to perform the actions associated with Event[X].
5) While the "actions" are being taken, Event[Y] fires.
6) VSA "actions" include clearing Event[X] and ASMI[n+1].

Downloaded from Arrow.com.

7) NESS remains high because Event[Y] has fired.

8) VSA sets EN[n] high. This action sets ASMI[n+1] high again and causes another CS5536 companion device ASMI.

9) VSA begins to return to the process interrupted by the original ASMI, but notes SMI into the processor is still asserted and returns to step 3.

10) If there was no Event[Y] at any point above, return to the interrupted process.

Note: Step 5 above could occur at any time between step 2 and step 9, or the Event[Y] could come after step 10. Regardless, the same VSA approach is used in order not to miss any events.

4.7.3.2 Apparent SSMI

An SSMI event is associated with an I/O space access to a specific address or range of addresses. If SSMIs are enabled for the given address, then the hardware traps or blocks access to the target register. The actual register write and/or read operation is not performed. Generally, only write operations are trapped, but there are cases of trapping writes and reads. The CS5536 companion device does not support SSMIs, however, it supports a mechanism called “Apparent SSMI” using ASMIs. (Hereafter “Apparent SSMI” is referred to as “SSMI”.)

The CS5536 companion device insures that the ASMI is taken on the I/O instruction boundary. The ASMI reaches the CPU before a target ready is signaled on the PCI bus. This action creates an SSMI because the I/O instruction will not complete before ASMI reaches the CPU. VSA software then examines the GLPCI_SB GLD_SMI_MSR to determine if an SSMI has occurred from an I/O trap.

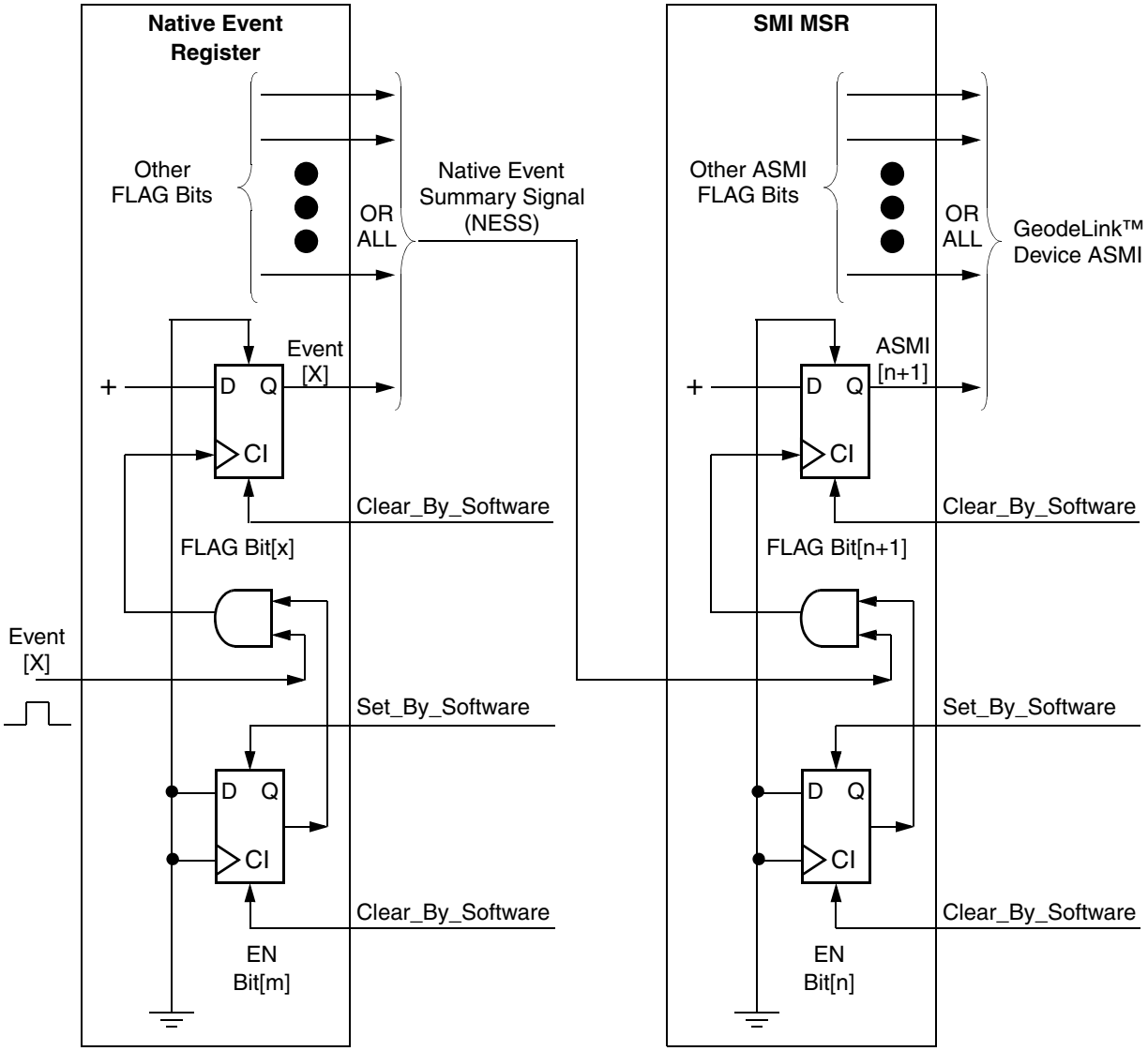

Figure 4-7. In-Direct ASMI Behavioral Model

Downloaded from Arrow.com.

SSMIs are primarily used for hardware emulation and extension. From the perspective of the code on which the trap occurred, everything is normal and done in hardware. However, VSA code generally performs a number of operations to achieve the desired result. This can include returning an appropriate read value to the trapped software. The GLIU is often used to implement SSMI traps. Any I/O descriptor can be used for this purpose by setting the Destination ID to 0. On a descriptor hit, the GLIU traps the access and sets the SSMI bit in the response packet.

4.7.3.3 ASMI/SSMI Summary

Table 4-9 provides a register summary for the Standard GLD_SMI_MSRs.

Table 4-9. GLD_MSR_SMIs Summary

Port #, Device	FLAG Bit	EN Bit	SMI Type	Description
Port 0, GLIU (Note 1)	35	3	ASMI	Statistics Counter 2 Event
	34	2	ASMI	Statistics Counter 1 Event
	33	1	ASMI	Statistics Counter 0 Event
	32	0	SSMI	Descriptor Trap and Illegal Accesses
Port 1, GLPCI_SB	22	6	ASMI	Target Abort Signaled
	21	5	ASMI	Parity Error
	20	4	ASMI	System Error
	19	3	ASMI	EXECP Received
	18	2	ASMI	SSMI Received
	17	1	ASMI	Target Abort Received
	16	0	ASMI	Master Abort Received
	35	3	ASMI	INT by the USB Option Controller (see PIC for actual source)
Port 4, DD (DIVIL)	47	15	SSMI	PMC PM1_CNT
	46	14	SSMI	PMC PM2_CNT
	45	13	ASMI	KEL A20 Keyboard
	44	12	SSMI	8237 DMA Controller access during legacy DMA
	43	11	SSMI	LPC access during legacy DMA
	41	9	SSMI	UART 2 access during legacy DMA
	40	8	SSMI	UART 1 access during legacy DMA
	39	7	ASMI	KEL INIT Port A
	38	6	ASMI	KEL A20 Port A
	37	5	ASMI	KEL INIT Keyboard
	36	4	ASMI	PMC Event (see PMC for actual source)
	35	3	ASMI	Extended PIC Mapper (see PIC for actual source)
	34	2	ASMI	KEL Emulation Event
	33	1	ASMI	Shutdown Special Cycle
	32	0	ASMI	Halt Special Cycle
Port 5, ACC	32	0	SSMI	IRQ from ACC
Port 7, GLCP (Note 1)	17	1	ASMI	Debug event
	16	0	ASMI	Convert CS5536 Global GLIU_Error to ASMI

Note 1. For this device, the listed events are enabled when the EN bit is low. For all other devices, events are enabled when the associated EN bit is high.

Downloaded from Arrow.com.

4.7.4 MSR Address 3: Error Control

Each GeodeLink Device within the CS5536 companion device can generate errors. Furthermore, these errors are controlled via the Standard GeodeLink Device Error MSR (GLD_MSR_ERROR) located at MSR Address 3 within each GeodeLink Device. The register is organized just like GLD_MSR_SMI, that is, the lower 32 bits contain Enable (EN) bits, while the upper 32 bits contain Flag (FLAG) bits (see Table 4-8 on page 74). The EN and FLAG bits are organized in pairs of (n, n+32). For example: (0,32); (1,33); (2,34); etc. The Error MSR is used to control and report errors.

The SMI concepts of *direct* asynchronous and synchronous carry over into similar error concepts. However, there is no concept of an *in-direct* error. At each GeodeLink Device, all of the Error FLAG bits are ORed together to form the *Error* signal. The Error is routed through the GLIU where it is ORed with all other device Errors to form the CS5536 companion device Error signal. This signal is routed to the GLCP for debug purposes.

Only the GLIU is capable of generating synchronous errors that utilize the *Exception* (EXCEP) bit of the associated response packet. All other CS5536 GeodeLink Devices only generate asynchronous errors.

4.7.5 MSR Address 4: Power Management

All the power management MSRs (GLD_MSR_PM) conform to the model illustrated in Table 4-10. The power and I/O mode functions are completely independent other than sharing the same MSR. The GLD_MSR_PM fields have the following definitions:

- Power Mode for Clock Domains:
  - 00: Disable clock gating. Clocks are always on.
  - 01: Enable active hardware clock gating. Clock goes off whenever this module's circuits are not busy.
  - 10: Reserved.
  - 11: Reserved.
- I/O Mode (Applies only to GLPCI_SB and IDE controller modules, see Table 4-11 and Table 4-12 for a list of controlled signals):
  - 00: No gating of I/O cells during a Sleep sequence (Default).
  - 01: During a power management Sleep sequence, force inputs to their non-asserted state when PM_IN_SLPCTL (PMS I/O Offset 20h) is enabled.
  - 10: During a power management Sleep sequence, force inputs to their non-asserted state when PM_IN_SLPCTL is enabled, and park (force) outputs low when PM_OUT_SLPCTL (PMS I/O Offset 0Ch) is enabled.
  - 11: Immediately and unconditionally, force inputs to their not asserted state, and park (force) outputs low.

The PMC controls when the PCI/IDE inputs and outputs (listed in Table 4-11 and Table 4-12) are asserted and de-asserted. The PM_OUT_SLPCTL (PMS I/O Offset 0Ch) and PM_IN_SLPCTL (PMS I/O Offset 20h) registers provide the global control of the PCI/IDE I/Os. The IO_MODE bits individually control PCI (GLPCI_SB GLD_MSR_PM (MSR 51000004h[49:48]) and IDE (IDE GLD_MSR_PM (MSR 51300004h[49:48]) I/Os.

Table 4-10. MSR Power Management Model

63	62	61	60	59	58	57	56	55	54	53	52	51	50	49	48	47	46	45	44	43	42	41	40	39	38	37	36	35	34	33	32
IO MODE H		IO MODE G		IO MODE F		IO MODE E		IO MODE D		IO MODE C		IO MODE B		IO MODE A		RSVD															
31	**30**	**29**	**28**	**27**	**26**	**25**	**24**	**23**	**22**	**21**	**20**	**19**	**18**	**17**	**16**	**15**	**14**	**13**	**12**	**11**	**10**	**9**	**8**	**7**	**6**	**5**	**4**	**3**	**2**	**1**	**0**
PMODE15		PMODE14		PMODE13		PMODE12		PMODE11		PMODE10		PMODE9		PMODE8		PMODE7		PMODE6		PMODE5		PMODE4		PMODE3		PMODE2		PMODE1		PMODE0	

Downloaded from Arrow.com.

Table 4-11. Sleep Driven PCI Signals

Signal	Ball No.	Direction
C/BE[3:0]#	R6, T9, U11, U14	Pad driven to 0. Internal logic sees logic 1.
DEVSEL#	R11	Pad driven to 0. Internal logic sees logic 1.
FRAME#	U9	Pad driven to 0. Internal logic sees logic 1.
TRDY#	T10	Pad driven to 0. Internal logic sees logic 1.
IRDY#	R10	Pad driven to 0. Internal logic sees logic 1.
STOP#	T11	Pad driven to 0. Internal logic sees logic 1.
PAR	U10	Pad driven to 0. Internal logic sees logic 1.
REQ#	T1	Pad driven to 0.
GNT#	R1	Pad TRI-STATE. Internal logic sees logic 0.
AD[31:0]	U1, T3, U3, R4, T4, R5, T5, U5, T6, U6, R7, T7, U7, R8, T8, U8, R12, T12, U12, R13, T13, U13, R14, T14, P15, R15, T15, P16, T16, R16, T17, R17	Pad driven to 0.

Table 4-12. Sleep Driven IDE Signals

Signal	Ball No.	Direction
IDE_CS[1:0]#	C10, B10	Pad driven to 0.
IDE_IOR0#	B13	Pad driven to 0.
IDE_IOW0#	C13	Pad driven to 0.
IDE_AD[2:0]	B11, A12, A11	Pad driven to 0.
IDE_RESET#	F15	Pad driven to 0.
IDE_RDY0	A13	Pad TRI-STATE. Internal logic sees logic 0.
IDE_DREQ0	A14	Pad TRI-STATE. Internal logic sees logic 0.
IDE_DACK0#	C12	Pad driven to 0.
IDE_DATA[15:0]	C14, B15, B16, A17, C17, D16, D17, E17, E16, E15, D15, B17, C16, C15, A15, B14	Pad driven to 0.

4.8 Power Management

Typically the three greatest power consumers in a computing device are the display, hard drive (if it has one) and system electronics. The CPU usually consumes the most power of all the system electronic components. Managing power for the first two is relatively straightforward in the sense that they are simply turned on or off. Managing CPU power is more difficult since effective use clock control technology requires effective detection of inactivity, both at a system level and at a code processing level.

Power consumption in an AMD Geode LX processor or other AMD Geode processor based system is managed with the use of both hardware and software. The complete hardware solution is provided for only when the AMD Geode LX processor is combined with the CS5536 companion device.

The processor power consumption is managed primarily through a sophisticated clock stop management technology. The processor also provides the hardware enablers from which the complete power management solution depends on.

Basically two methods are supported to manage power during periods of inactivity. The first method, called activity based power management allows the hardware in the CS5536 companion device to monitor activity to certain devices in the system and if a period of inactivity occurs take some form of power conservation action. This method does not require OS support because this support is handled by SMM software. Simple monitoring of external activity is imperfect as well as inefficient. The second method, called passive power management, requires the OS to take an active role in managing power. AMD supports two application programming interfaces (APIs) to enable power management by the OS: Advanced Power Management (APM) and Advanced Configuration and Power Interface (ACPI). These two methods can be used independent of one another or they can be used together. The extent to which these resources are employed depends on the application and the discretion of the system designer.

The AMD Geode LX processor and CS5536 companion device contain advanced power management features for reducing the power consumption of the processor, companion device and other devices in the system.

Downloaded from Arrow.com.

4.8.1 Power Domains

In order to support power management in periods of inactivity as well as “off” conditions, the CS5536 companion device is divided into three power domains:

- Working Domain - Consists of V_{CORE} and V_{IO}
- Standby Domain - Consists of V_{CORE_VSB} and V_{IO_VSB}
- RTC Domain - Consists of V_{BAT}

When the system is in an operational mode, all three of the domains are on. In general the power management techniques used while operating produce power savings without user awareness. The performance and usability of the system is unaffected.

When the system is “off” only the Standby domain is powered. If desired, the operational design can allow returning the system to the operational point when the system was last “on”. This “instant on” feature is a requirement for many battery powered systems.

If the system has been removed from all power sources, the Real-Time Clock (RTC) can be kept operating with a small button battery.

All sections of the CS5536 companion device use the Working domain except:

Standby Domain

- GPIO[31:24] and associated registers.
- GPIO Input Conditioning Functions 6 and 7.
- GPIO Power Management Events (PMEs) 6 and 7.
- MFGPT[7:6].
- Power Management Controller (PMC) Standby Controller and associated I/O consisting of: WORKING, WORK_AUX, and RESET_OUT.
- PMC Standby registers starting at PMS I/O Offset 30h. See Table 6-71 "PM Support Registers Summary" on page 525.

RTC Domain

- Real-Time Clock

4.8.2 ACPI Power Management

ACPI power management is a standardized method to manage power. An overview of the standard is presented here. See Section 5.17 "Power Management Control" on page 169 for a more complete discussion of ACPI support in the CS5536 companion device. See ACPI specification v2.0 for complete details on ACPI. An AMD Geode LX processor/CS5536 system solution can fully support all the requirements in the ACPI specification.

ACPI defines power states from a system perspective down to a device perspective. There are four global system states: G0 through G3. As a subset of the Global system states G0-G2, there are six Sleep states: S0 through S5. Within the sleep states S0-S1, there are five CPU states: C0-C3 and CT, and three Device states: D0-D2. In an AMD Geode LX processor/CS5536 system design, the optional Sleep state S2, and the CPU states C3 and CT (CPU Throttling) are not supported. See Table 5-34 "Supported ACPI Power Management States" on page 169“. Table 5-34 shows how the ACPI power states relate to each other. The table also shows the condition of the power domains and the logic within those domains with respect to the ACPI power states.

4.8.3 APM Power Management

Some systems rely solely on an APM (Advanced Power Management) driver for enabling the operating system to power-manage the CPU. APM provides several services that enhance the system power management. It is a reasonable approach to power management but APM has some limitations:

- APM is an OS-specific driver, and may not be available for some operating systems.
- Application support is inconsistent. Some applications in foreground may prevent Idle calls.
- APM does not help with Suspend determination or peripheral power management.

4.9 Component Revision ID

The revision ID number of the CS5536 companion device may be read in any of the following places. All return the same value:

1) GLCP_CHIP_REV_ID register: MSR 51700017h[7:0].
2) PCI Configuration Space Device Revision ID: PCI Index 08h[15:0].
3) TAP Controller Revision register: Instruction 8FFFFAh[7:0].

The revision is an 8-bit value. For example:

0x01	A0	Value assigned to first manufactured silicon of any new product.

For listing of updates, refer to the *AMD Geode™ CS5536 Companion Device Specification Update* document.

Downloaded from Arrow.com.

5 Module Functional Descriptions

The modules that make up the AMD Geode™ CS5536 companion device (shown in gray in Figure 5-1) are:

- GeodeLink™ Interface Unit
- GeodeLink PCI South Bridge
- GeodeLink Control Processor
- IDE Controller (IDE Controller multiplexed with Flash Interface)
- Universal Serial Bus Host Controller
- Universal Serial Bus Device Controller
- Audio Codec 97 (AC97) Controller
- Diverse Device

The Low Voltage Detect (LVD) circuit is not a GeodeLink Device, but is connected to the Power Management Controller (PMC) for voltage monitoring support.

This section provides a functional description of each module.

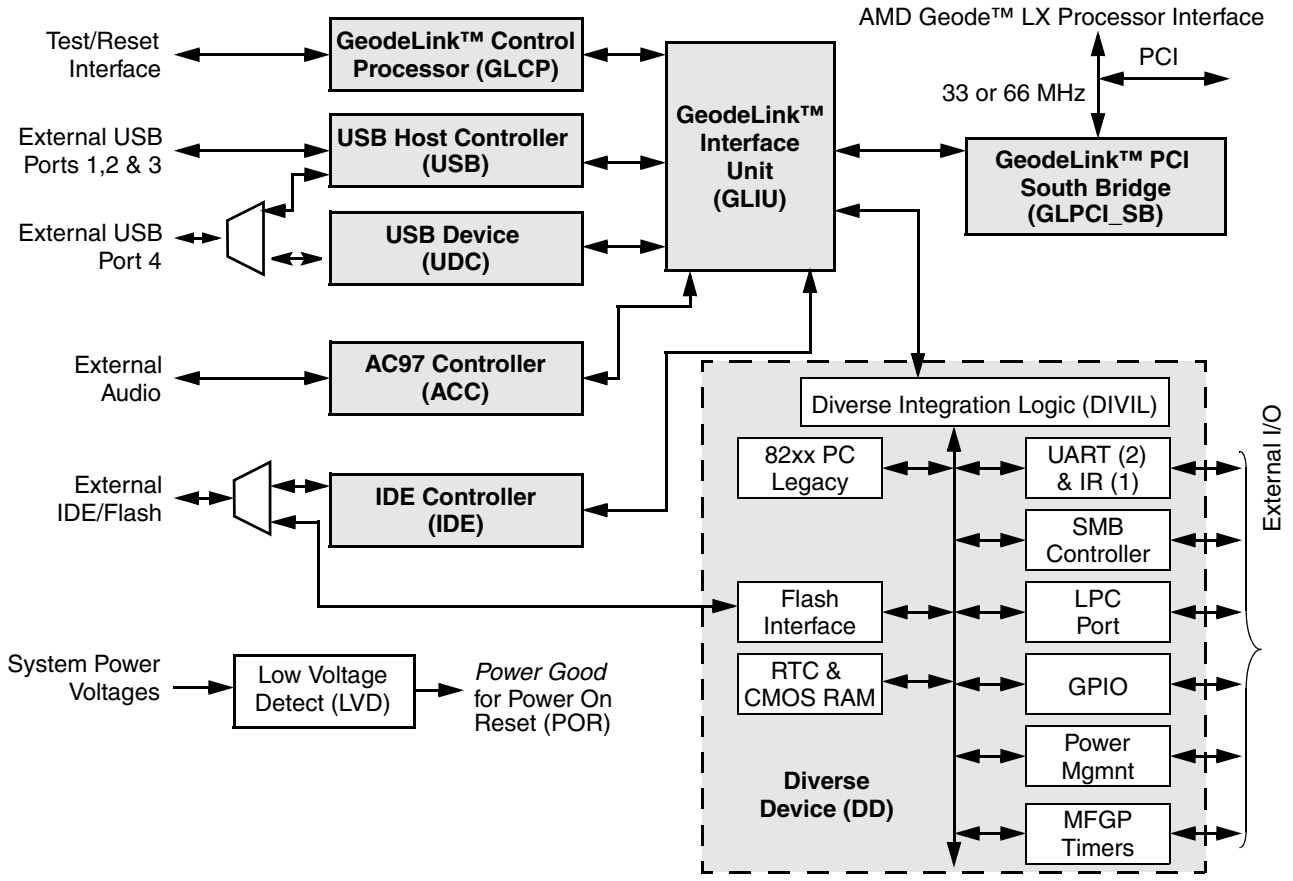

Figure 5-1. Module Block Diagram

Downloaded from Arrow.com.

5.1 GeodeLink™ Interface Unit

Many traditional architectures use buses to connect modules together, usually requiring unique addressing for each register in every module. This requires that some kind of house-keeping be done as new modules are designed and new devices are created from the module set. Module select signals can be used to create the unique addresses, but that can get cumbersome and it requires that the module selects be sourced from some centralized location.

To alleviate this issue, AMD developed an internal bus architecture based on GeodeLink™ technology. The GeodeLink architecture connects the internal modules of a device using the data channels provided by GeodeLink Interface Units (GLIUs). Using GLIUs, all internal module port addresses are derived from the distinct port that the module is connected to. In this way, a module's Model Specific Registers (MSRs) do not have unique addresses until a device is defined. Also, as defined by the GeodeLink architecture, a module's port address depends on the location of the module sourcing the cycle, or source module.

The AMD Geode CS5536 companion device incorporates one GLIU into its device architecture. Except for the configuration registers that are required for x86 compatibility, all internal registers are accessed through a Model Specific Register (MSR) set. MSRs have a 32-bit address space and a 64-bit data space. The full 64-bit data space is always read or written when accessed.

5.1.1 GLIU Port Connections

Table 5-1 shows the GeodeLink Devices connected to each of the seven GLIU ports on CS5536 companion device.

Table 5-1. GLIU Port Connections

Port #	GeodeLink™ Device
1	GeodeLink PCI South Bridge (GLPCI_SB)
2	USB Controller (USB)
3	IDE Controller (IDE)
4	Diverse Device (DD)
5	AC97 Audio Controller (ACC)
6	Not Used
7	GeodeLink Control Processor (GLCP)

5.1.2 Descriptor Summary

Table 5-2 shows the descriptors reserved for each GeodeLink Device.

Table 5-2. GLIU Descriptors Reserved for GeodeLink™ Devices

GeodeLink™ Device	Descriptor Type	# of Descriptors	Usage
USB	P2D_BM(K)	4	Do not hit on keyboard emulation registers.
IDE	IOD_BM	1	For IDE master registers.
	IOD_BM	1	Defaults to 1Fxh.
	IOD_SC	1	Defaults to 3F6h.
DD	IOD_BM	3	COM ports legacy power management.
	IOD_BM	1	For secondary IDE trapping to 17xh.
	IOD_SC	1	For secondary IDE trapping to 376h.
	IOD_SC	1	Keyboard legacy power management.
	IOD_SC	3	LPC ports legacy power management.
	IOD_SC	1	Floppy legacy power management.
ACC	P2D_BM	1	For memory space registers.
	IOD_BM	1	For I/O space registers.
GLPCI_SB	P2D_BM	1	For master requests to AMD Geode™ LX processor's GLPCI.
Spares	IOD_BM	3	
	IOD_SC	1	
	P2D_BM	1	

Downloaded from Arrow.com.

5.2 GeodeLink™ PCI South Bridge

The GeodeLink™ PCI Bus South Bridge (GLPCI_SB) provides a PCI interface for GeodeLink Device based designs. Its three major functions are:

1) Acting as a PCI slave and transforming PCI transactions to GLIU transactions as a GLIU master.
2) Acting as a GLIU slave and transforming GLIU transactions to PCI bus transactions as a PCI master.
3) Providing a CPU serial interface that conveys system information such as interrupts, SSMI, ASMI, etc.

Features include:

- PCI v2.2 compliance. Optional signals PERR#, SERR#, LOCK#, and CLKRUN are not implemented.
- 32-bit, 66 MHz PCI bus operation and 64-bit, 66 MHz GeodeLink Device operation.
- Target support for fast back-to-back transactions.
- Zero wait state operation within a PCI burst.
- MSR access mailbox in PCI configuration space.
- Capable of handling in-bound transactions after RESET_OUT# + 2 clock cycles.
- Dynamic clock stop/start support for GeodeLink and PCI clock domains via power management features.
- Programmable IDSEL selection.
- Support active decoding for Legacy I/O space 000h to 3FFh and DMA High Page 480h to 48Fh.
- Support subtractive decode for memory and I/O space.
- Special performance enhancements for fast IDE PIO data transfers.
- The GeodeLink PCI interface does not support peer-to-peer transactions on the PCI bus from devices other than the CPU.

The GLPCI_SB module is composed of the following major blocks:

- GeodeLink Interface
- FIFO/Synchronization
- Transaction Forwarding
- PCI Bus Interface
- CPU Interface Serial (CIS)

The GLIU and PCI bus interfaces provide adaptation to the respective buses. The Transaction Forwarding block provides bridging logic. The CIS block provides serial output to the CPU for any change in SSMI and the selected side-band signals. Little endian byte ordering is used on all signal buses.

Figure 5-2 is a block diagram of the GLPCI_SB module.

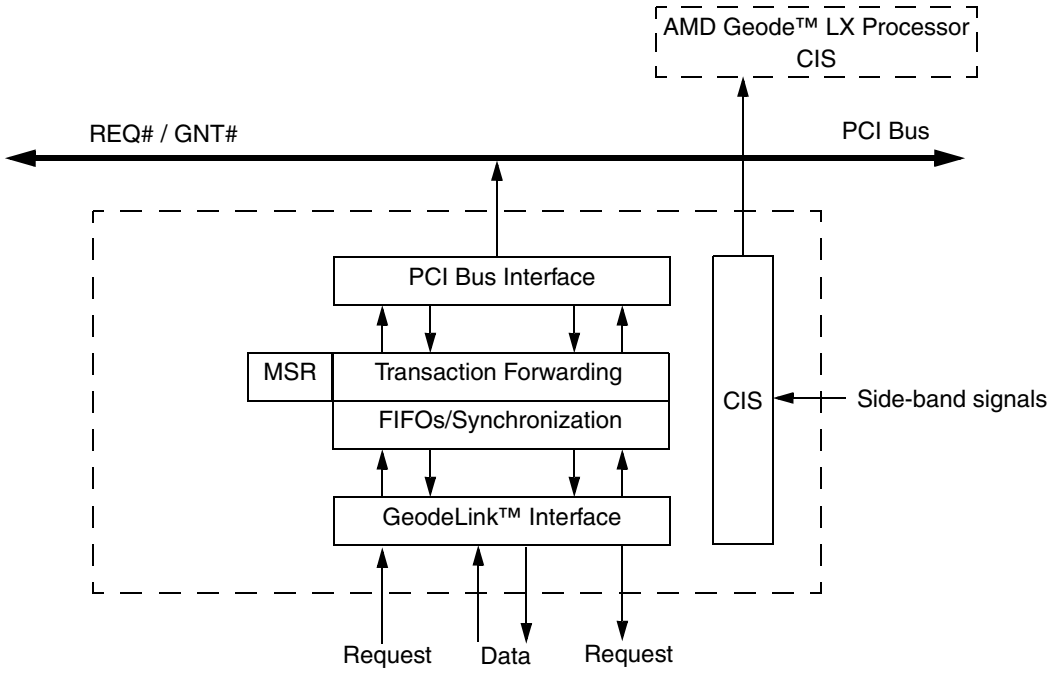

Figure 5-2. GLPCI_SB Block Diagram

Downloaded from Arrow.com.

5.2.1 GeodeLink Interface

The GeodeLink Interface block provides a thin protocol conversion layer between the transaction forwarding module and the GLIU. It is responsible for multiplexing in-bound write request data with out-bound read response data on the single GLIU data out bus.

5.2.2 FIFOs/Synchronization

The FIFO block consists of a collection of in-bound and out-bound FIFOs. Each FIFO provides simple, synchronous interfaces to the reader and to the writer.

The FIFO block also includes synchronization logic for a few non-FIFO related signals and clock gating logic.

5.2.3 Transaction Forwarding

The Transaction Forwarding block receives, processes, and forwards transaction requests and responses between the GeodeLink Interface and PCI Bus Interface blocks. It implements the transaction ordering rules. It performs write/read prefetching as needed. It also performs the necessary translation between GLIU and PCI commands. The Transaction Forwarding block also handles the conversion between 64-bit GLIU data paths and 32-bit PCI data paths.

Out-bound transactions are handled in a strongly ordered fashion. All out-bound memory writes are posted. The SEND_RESPONSE flag is never expected to be set in a memory write and is ignored. Any queued out-bound requests are flushed prior to handling an in-bound read request.

All in-bound memory writes are posted. South bridge master out-bound read request data can pass in-bound writes. Thus, a pending out-bound read request need not be deferred while posted in-bound write data is waiting to be flushed or is in the process of being flushed. The out-bound read request may be performed on the PCI bus at the same time that the in-bound write data is flowing through the GLIU.

When handling an in-bound read request, the intended size of the transfer is unknown. In-bound read requests for non-prefetchable addresses only fetch the data explicitly indicated in the PCI transaction. Thus, all in-bound read requests made to non-prefetchable addresses return at most a single 32-bit WORD. In-bound read requests made to prefetchable memory may cause more than a 32-bit WORD to be prefetched. The amount of data prefetched is configurable via the read threshold fields of the Global Control (GLPCI_CTRL) register, MSR 51000010h. Multiple read requests may be generated to satisfy the read threshold value.

In-bound read requests may pass posted in-bound write data when there is no address collision between the read request and the address range of the posted write data (different cache lines) and the read address is marked as being prefetchable.

Support IDE data port Read Prefetch when MSR Control register (MSR 51000010h[19:18]) is set to IDE prefetch for performance enhancement. I/O reads to address 1F0h can follow a prefetching behavior. When enabled, the GLPCI_SB issues GLIU Read Request Packets for this specific address before receiving a request on the PCI bus for it.

5.2.4 PCI Bus Interface

The PCI Bus Interface block provides a protocol conversion layer between the transaction forwarding module and the PCI bus. The master and target portions of this module operate independently. Thus, out-bound write requests and in-bound read responses are effectively multiplexed onto the PCI bus. The PCI Bus Interface block includes address decoding logic to recognize distinct address regions for slave operation. Each address region is defined by a starting address, an address mask, and some attached attributes (i.e., memory and/or I/O space indicator, prefetchable, retry/hold, postable memory write, region enable).

The PCI Bus Interface block is responsible for retrying out-bound requests when a slave termination without data is seen on the PCI bus. It also must restart transactions on the PCI that are prematurely ended with a slave termination. This module also always slave terminates in-bound read transactions issued to non-prefetchable regions after a single WORD has been transferred.

5.2.5 CPU Interface Serial

The CPU Interface Serial block provides a serial interface to the CPU for side-band signals. From reset, the GLPCI_SB connects only the SUSP# signal to the serial output. All other signals must be added by programming the CIS mode (MSR 51000010h[4:3]). Any change of the signals selected from the 16 side-band signals will start shifting to the CPU all 20 bits of the CIS register including two START bits (00) and two padding STOP bits (11). Three different modes control the selection of the side-band signals to the CIS shift register.

5.2.6 Programmable ID Selection

An ID select register, IDSEL[31:0], is used for programmable ID selection. Only one bit in IDSEL[31:12] is set and used as a chip select (i.e., compared with AD[31:12]) during a PCI configuration write/read. The reset value of the IDSEL register is 02000000h. After reset, the first 32-bit I/O write PCI command (i.e., BE# = 0h) with address 00000000h and one bit set in AD[31:0] is assumed to initialize the IDSEL register. Only data with one bit set in AD[31:0] is considered valid. All other values are ignored and will not change the contents of IDSEL.

Downloaded from Arrow.com.

5.2.7 SSMI and EXCEP Support in GLIU Read/Write Response Packets

If the Hold for CIS Transfer Disable bit in GLPCI_MSR_CTRL (MSR 51000010h[9]) is set, any in-bound memory, I/O, or external MSR read/write response packet is checked for SSMI and EXCEP bits. If the response packet has the EXCEP bit and/or SSMI bit set, then the GLPCI_SB will not complete the transaction (it either issues a Retry or Hold PCI bus) until the CIS transfer completes.

During an out-bound transaction, when the GLPCI_SB issues a Master Abort, the EXCEP bit in the GLIU response packet is set.

5.2.8 Subtractive Decoding

If the SDOFF (Subtractive Decode Off) bit in the GLPCI_MSR_CTRL (MSR 51000010h[10]) is cleared (reset value), any PCI transaction, other than Configuration Read/Write, Interrupt Acknowledge, and Special Cycle transactions, not claimed by any device (i.e., not asserting DEVSEL#) within the default active decode cycles (three cycles immediately after FRAME# being asserted) will be accepted by GLPCI_SB at the fourth clock edge. The Retry condition is issued for Memory Read, Memory Read Line, Memory Read Multiple (after Initial Latency Timeout), and I/O Read/Write (immediately) and all the required information (command, address and byte enable bits) is stored for the following Delayed Transactions. During Delayed Transactions, the active decode scheme is used. Any address accessed through a subtractive decoding is assumed to be non-prefetchable.

5.2.9 Byte Enable Checking in I/O Address Decoding

In any in-bound I/O transaction, the byte enables BE[3:0]# are checked against address bits PCI_AD[1:0] for valid combinations. If an illegal byte enable pattern is asserted, the GLPCI_SB issues a Target Abort. The only exception is when subtractive decode is used. During a subtractive decode, PCI_AD[1:0] and BE# are passed to the GLIU as is. The I/O Addressing Error Checking Disable bit in GLPCI_MSR_CTRL (MSR 51000010h[8]) can be set to disable the I/O addressing error checking, where AD[1:0] is ignored and the byte enables are passed to the GLIU.

5.2.10 IDE Data Port Read Prefetch

This algorithm issues multiple four byte reads to the IDE data register (1F0h) at the “beginning” of an IDE “read operation”. The hardware continues to read ahead of software read requests until a sector boundary is about to be crossed. The hardware does not read ahead over a sector boundary. Once a software read crosses a sector boundary, the hardware proceeds to read ahead again. Furthermore, the algorithm does not prefetch the last read of a sector because there is the potential that the last sector read will be the last read of the overall read operation. On the last read, the status changes to indicate the operation is complete. By not prefetching the last sector read, the data and status never get out of sync with each other.

5.2.11 IDE Data Port Write Posting

The PPIDE (Post Primary IDE) bit in GLPCI_MSR_CTRL (MSR 51000010h[17]) controls post/write on confirmation for I/O writes of address 1F0h (part of primary IDE address). If bit 17 is set, a write is completed immediately on the PCI bus as soon as it is accepted by the GLPCI_SB. If bit 17 is cleared, an I/O write is completed only after completing the write in the primary IDE space. Default behavior is write on confirmation.

5.2.12 Other Typical Slave Write Posting

For each GLPCI_SB Region Configuration register (0 through 15), if the SPACE bit (bit 32) is programmed for I/O and bit 3 (PF, Prefetchable) is high, post all I/O writes to this region. (See Section 6.2.2.2 "Region 0-15 Configuration MSRs (GLPCI_R[x])" on page 232 for further details.)

Use of this feature is most appropriate for GPIO “bit banging” in the Diverse Device module. Posting writes on the North Bridge side will not increase performance.

5.2.13 Memory Writes with Send Response

Normally memory writes are posted independent of region and independent of decode and legacy/non-legacy address. The USB registers are in memory space and can not be moved to I/O space due to driver compatibility issues. In an AMD Geode LX processor/CS5536 companion device system, a memory write is posted and a possibility exists that a subsequent I/O write will complete before the posted memory write completes. In order to prevent out of order execution, when a memory write is issued to the GLIU in the CS5536 companion device, the request packet is issued with the send response bit set to serialize the request. I/O writes are not an issue, since the requests packet always has the send response bit set.

Downloaded from Arrow.com.

5.2.14 CPU Interface Serial (CIS)

The CIS provides the system interface between the CS5536 companion device and AMD Geode LX processor. The interface supports several modes to send different combinations of 16-bit side-band signals through the CIS signal (ball P3). The sideband signals are synchronized to the PCI clock through 2-stage latching. Whenever at least one of 16 signals is changed, the serial transfer (using the PCI clock) immediately starts to send the information from the companion device to the processor. But, if any bit changes within 20 clocks of any previous change, the later change is not transmitted during the transfer. Another transfer starts immediately after the conclusion of the transfer due to the subsequent change.

There are three modes of operation for the CIS signal (ball P3). Note that the transmitted polarity may be different than the “generally defined” polarity state:

- Mode A - Non-serialized mode with CIS equivalent to SUSP# (reset mode). Not used in normal operation.
- Mode B - Serialized mode with signals SUSP#, NMI#, Sleep#, and Delayed Sleep#. Not used in normal operation.
- Mode C - Serialized mode with Mode B signals plus SMI#, and INTR#. Used in normal operation.

If the HCD bit (MSR 51000010h[9]) is set, any in-bound transaction, except in-bound memory writes, is held for any CIS transfer to complete before claiming completion.

Mode selection is programmed in the GLPCI_MSR_CTRL (MSR 51000010h[4:3]).

Table 5-3 lists the serial data with corresponding side-band signals. The serial shift register takes the selected side-band signals as inputs. The signal SMI is the ORed result of the SSMI_ASMI_FLAG (SSMI Received Event) bit (GLPCI MSR 51000002h[18]) and the side-band signal ASMI. It also serves as a direct output to the processor.

Table 5-3. CIS Serial Bits Assignment and Descriptions

Bit Position	Mode B	Mode C	Comment
start_0	0	0	Start Bit 0
start_1	0	0	Start Bit 1
data 00	1	1	Reserved
data 01	1	1	Reserved
data 02	SUSP#	SUSP#	Sleep Request
data 03	NMI#	NMI#	Non-Maskable Interrupt
data 04	Sleep#	Sleep#	Power Management Input Disable
data 05	Delayed Sleep#	Delayed Sleep#	Power Management Output Disable
data 06	1	SMI#	Asynchronous SMI or Synchronous SMI
data 07	1	INTR#	Maskable Interrupt out
data 08	1	1	Reserved
data 09	1	1	Reserved
data 10	1	1	Reserved
data 11	1	1	Reserved
data 12	1	1	Reserved
data 13	1	1	Reserved
data 14	1	1	Reserved
data 15	1	1	Reserved
stop_0	1	1	Stop Bit 0
stop_1	1	1	Stop Bit 1
Note: Mode A is not listed since it is a non-serialized mode with CIS equivalent to SUSP# (reset mode).			

Downloaded from Arrow.com.

5.2.15 Exception Handling

This section describes how various errors are handled by the PCI Bus Interface block.

Since PERR# is not implemented on the CS5536 companion device or on the AMD Geode LX processor, error reporting via this signal is not supported. In an AMD Geode LX/CS5536 system, other PCI devices that do have the PERR# pin must have a pull-up.

5.2.16 Out-Bound Write Exceptions

When performing an out-bound write on PCI, three errors may occur: master abort, target abort, and parity error. When a master or target abort occurs, the PCI Bus Interface block flushes any stored write data. If enabled, an ASMI is generated. ASMI generation is enabled and reported in GLPCI_SB GLD_MSR_SMI (MSR 51000002h). Parity errors are detected and handled by the processor. The failed transaction is not retried.

5.2.17 Out-Bound Read Exceptions

When performing an out-bound read on PCI, three errors may occur: master abort, target abort, and detected parity error. When a master or target abort occurs, the PCI Bus Interface block returns the expected amount of data. If enabled, an ASMI is generated. ASMI generation is enabled and reported in GLPCI_SB GLD_MSR_SMI (MSR 51000002h). Parity errors are detected and handled by the processor. The failed transaction is not retried.

5.2.18 In-Bound Write Exceptions

When performing an in-bound write from PCI, two errors may occur: a detected parity error and a GLIU exception. A GLIU exception cannot be relayed back to the originating PCI bus master, because in-bound PCI writes are always posted. When a parity error is detected, an ASMI is generated if it is enabled. ASMI generation is enabled and reported in the GLPCI_SB GLD_MSR_SMI register (MSR 51000002h). However, the corrupted write data is passed along to the GLIU.

5.2.19 In-Bound Read Exceptions

When performing an in-bound read from the GLIU, the EXCEP flag may be set on any received bus-WORD of data. This may be due to an address configuration error caused by software or by an error reported by the source of data. The asynchronous ERR and/or SMI bit is set by the PCI Bus Interface block and the read data, valid or not, is passed to the PCI Bus Interface block along with the associated exceptions. The PCI Bus Interface block should simply pass the read response data along to the PCI bus.

Downloaded from Arrow.com.

5.3 AC97 Audio Codec Controller

The primary purpose of the AC97 Audio Codec Controller (ACC) is to stream data between system memory and an AC97 codec (or codecs) using direct memory access (DMA). The AC97 codec supports several channels of digital audio input and output. Hence, the ACC contains several bus mastering DMA engines to support these channels. This method off-loads the CPU, improving system performance. The ACC is connected to the system through the GLIU and all accesses to and from system memory go through the GLIU. The AC97 codec is connected with a serial interface, and all communication with the codec occurs via that interface (see Figure 5-3).

Features include:

- AC97 version 2.3 compliant interface to codecs: serial in (x2), serial out, sync out, and bit clock in.
- Eight-channel buffered GLIU mastering interface.
- Support for industry standard 16-bit pulse code modulated (PCM) audio format.
- Support for any AC97 codec with Sample Rate Conversion (SRC).
- Transport for audio data to and from the system memory and AC97 codec.
- Capable of outputting multi-channel 5.1 surround sound (Left, Center, Right, Left Rear, Right Rear, and Low Frequency Effects).

Hardware Includes:

- GeodeLink™ Adapter.
- Three 32-bit stereo-buffered bus masters (two for output, one for input).
- Five 16-bit mono-buffered bus masters (three for output, two for input).
- AC Link Control block for interfacing with external AC97 codec(s).

The ACC logic controls the traffic to and from the AC97 codec. For input channels, serial data from the codec is buffered and written to system memory using DMA. For output channels, software-processed data is read from system memory and streamed out serially to the codec.

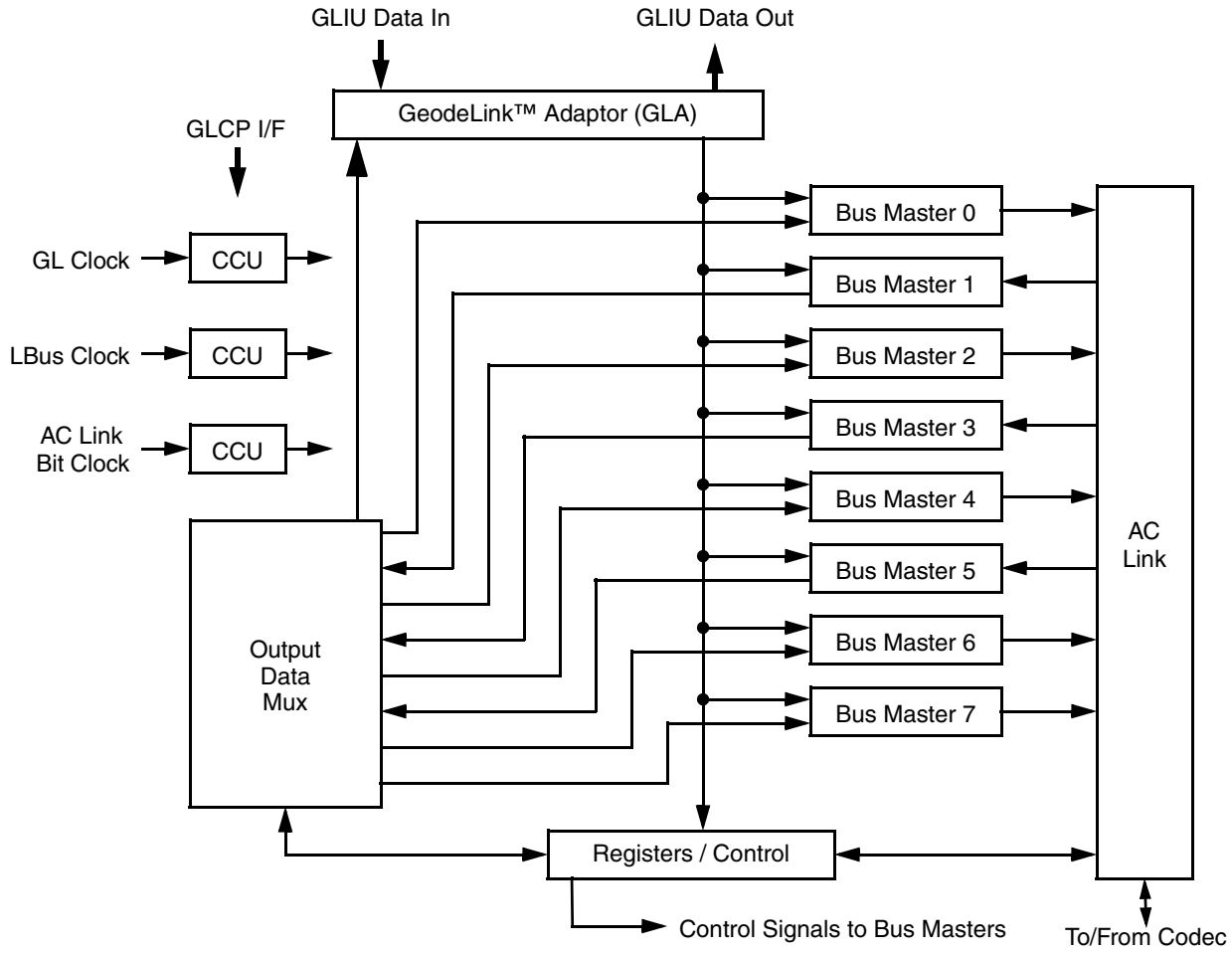

Figure 5-3. ACC Block Diagram

Downloaded from Arrow.com.

5.3.1 Audio Bus Masters

The ACC includes eight bus mastering units (three for input, five for output). Each bus master corresponds to one or two slots in the AC Link transfer protocol (see Section 5.3.4.1 "AC Link Serial Interface Protocol" on page 90). Table 5-4 lists the details for each bus master.

5.3.2 Bus Master Audio Configuration Registers

The bus masters must be programmed by software to configure how they transfer data. This is done using their configuration registers. These registers determine whether the bus master is active and what parts of memory they have been assigned to transfer. Status registers allow software to read back information on the state of the bus masters. (See Section 6.3.2 "ACC Native Registers" on page 246 for further details on the Bus Master Audio Configuration registers.)

5.3.3 AC Link Overview

The AC Link is the interface between the AC97 codec and the ACC. The interface is AC97 v2.3 compliant. Any AC97 codec that supports Sample Rate Conversion (SRC) can be used with the ACC. See Intel Corporation's *"Audio Codec 97" Revision 2.3* component specification for more details.

The AC Link protocol defines an input and output frame consisting of 12 "slots" of data. Each slot contains 20 bits, except slot 0, which contains 16 bits. The SYNC signal is generated by the ACC and defines the beginning of an input and an output frame. The serial clock is generated by the AC97 codec. The AC Link is covered in depth in Section 5.3.4.1 "AC Link Serial Interface Protocol" on page 90. It is important to note that the AC97 codec has its own set of configuration registers that are separate from the ACC. These registers are accessible over the serial link. There are registers in the ACC that provide software with an interface to the AC97 codec registers. (See Section 6.3.2 "ACC Native Registers" on page 246 for register descriptions.)

Table 5-4. Audio Bus Master Descriptions

Bus Master	Size	Direction	AC Link Slot(s)	Channel Description
BM0	32-bit (16 bits/channel)	Output to codec	3 (left) and 4 (right)	Left and Right Stereo Main Playback
BM1	32-bit (16 bits/channel)	Input from codec	3 (left) and 4 (right)	Left and Right Stereo Recording
BM2	16-bit	Output to codec	5	Modem Line 1 DAC Output
BM3	16-bit	Input from codec	5	Modem Line 1 ADC Input
BM4	16-bit	Output to codec	6 or 11 (configurable)	Center Channel Playback (slot 6) or Headset Playback (slot 11)
BM5	16-bit	Input from codec	6 or 11 (configurable)	Microphone Record (slot 6) or Headset Record (slot 11)
BM6	32-bit (16 bits/channel)	Output to codec	7 (left) and 8 (right)	Left and Right Surround Playback
BM7	16-bit	Output to codec	9	Low Frequency Effects Playback (LFE)

Downloaded from Arrow.com.

5.3.4 Codec Interface

5.3.4.1 AC Link Serial Interface Protocol

The following figures outline the slot definitions and timing scheme of the AC Link serial protocol.

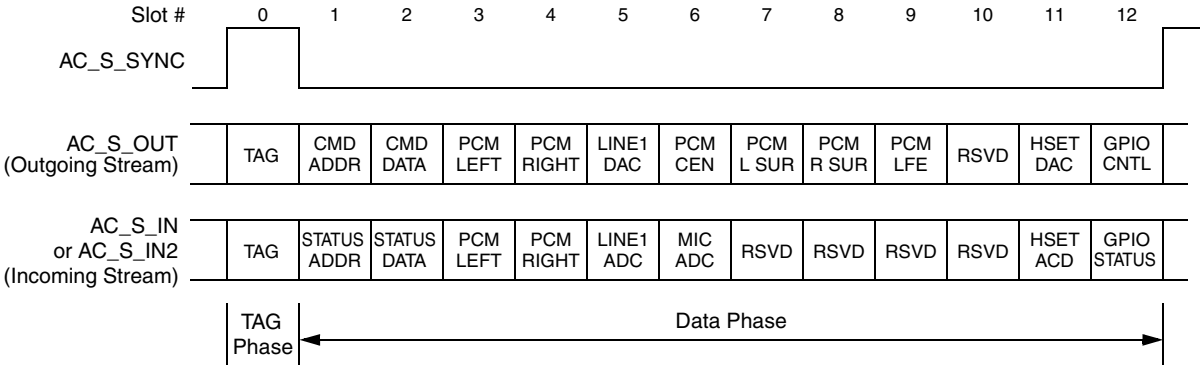

Figure 5-4. AC Link Slot Scheme

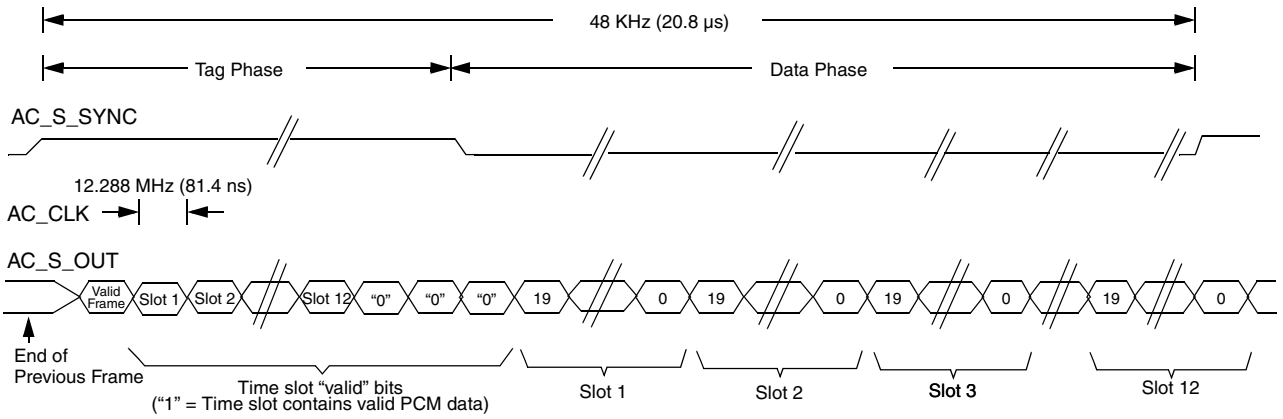

Figure 5-5. AC Link Output Frame

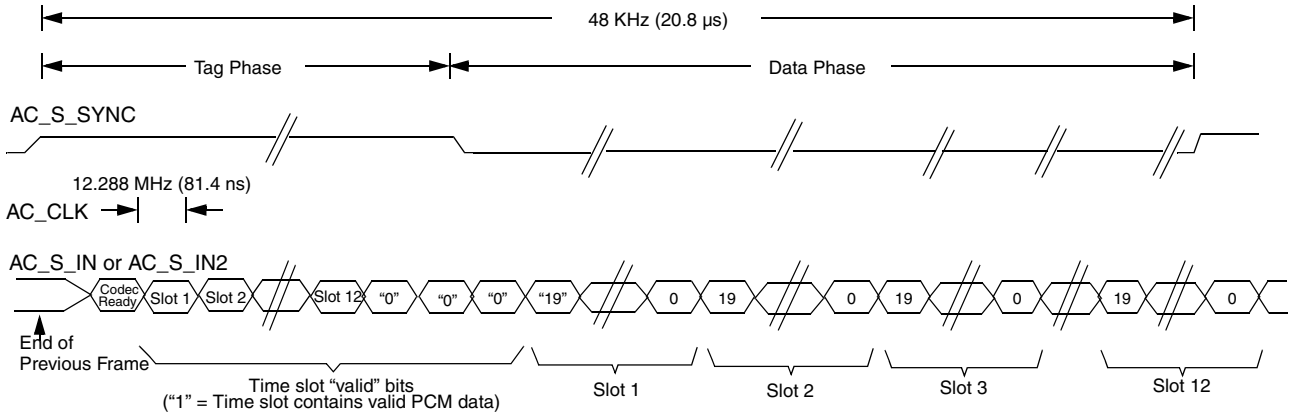

Figure 5-6. AC Link Input Frame

Downloaded from Arrow.com.

5.3.4.2 AC Link Output Frame (AC_S_OUT)

The audio output frame data stream corresponds to the time division multiplexed bundles of all digital output data targeting the AC97 codec's DAC inputs and control registers. Each audio output frame contains 13, 20-bit outgoing data slots, except for slot 0, which contains 16 bits. Slot 0 is a dedicated slot used for the AC Link protocol.

An audio output frame begins with a low-to-high transition of the AC_S_SYNC signal. AC_S_SYNC is synchronous to the rising edge of AC_CLK. The AC97 codec samples the AC_S_SYNC on the immediately following falling edge of AC_CLK. AC_S_SYNC is held high for 16-bit clocks. The ACC transmits data on each rising edge of the bit clock, whereas the AC97 codec samples the data on the falling edge of AC_CLK.

The serial output stream is MSB justified (MSB first) within each slot, and all non-valid bit positions are stuffed with 0s by the AC Link interface.

Slot 0: TAG

This slot is used for AC Link protocol information. The first bit (bit 15) flags the validity of the entire audio frame as a whole. If this bit is 0, all of the remaining bits in the frame should be 0. The next 12 bits indicate the validity of the 12 following slots. The last two bits contain the codec ID for accessing registers of several codecs. When the codec ID is 01, 10, or 11, bits 13 and 14 must always be 0, even if slots 1 and 2 are valid. Slots that are marked invalid by slot 0 should be padded with all 0s (except for slots 1 and 2 while accessing registers of a secondary codec).

bit 15	Frame Valid
bit 14	Slot 1 Valid (primary codec only)
bit 13	Slot 2 Valid (primary codec only)
bits [12:3]	Slot 3-12 Valid bits (bit[12] -> slot 3, bit[11] -> slot 4, bit[10] -> slot 5, ... , bit[3] -> slot 12)
bit 2	Reserved
bits [1:0]	Codec ID field

Slot 1: Command Address

The command address is used to access registers within the AC97 codec. The AC97 registers control features and monitor status for AC97 codec functions, including mixer settings and power management as indicated in the AC97 Codec specifications.

The control interface architecture supports up to 64 16-bit read/write registers, addressable on even byte boundaries, and reserves support for 64 odd addresses. Audio output frame slot 1 communicates control register address, and write/read command information to the AC97 codec.

bit 19	Read/Write Command (1 = Read, 0 = Write)
bits [18:12]	Control Register Index (64 16-bit locations, addressed on even byte boundaries)
bits [11:0]	Reserved (Stuffed with 0s)

The first bit (MSB) indicates whether the current control transaction is a read or write operation. The following 7 bit positions communicate the targeted control register address.

Slot 2: Command Data

The command data slot carries 16-bit control register write data if the current command port operation is a write cycle as indicated by slot 1, bit 19.

bits [19:4]	Control Register Write Data (Stuffed with 0s if current operation is a read)
bits [3:0]	Reserved (Stuffed with 0s)

If the current command port operation is a read, then the entire slot is stuffed with 0s.

Slot 3: PCM Playback Left Channel

Outputs the front left audio DAC data (main output) (16-bit resolution, MSB first, unused LSBs = 0).

Slot 4: PCM Playback Right Channel

Outputs the front right audio DAC data (main output) (16-bit resolution, MSB first, unused LSBs = 0).

Slot 5: Modem Line 1 DAC

Outputs the modem line 1 DAC data (16-bit resolution, MSB first, unused LSBs = 0).

Slot 6: PCM Playback Center Channel

Outputs the center channel DAC data (16-bit resolution, MSB first, unused LSBs = 0).

Slot 7: PCM Playback Left Surround Channel

Outputs the left surround channel DAC data (16-bit resolution, MSB first, unused LSBs = 0).

Slot 8: PCM Playback Right Surround Channel

Outputs the right surround channel DAC data (16-bit resolution, MSB first, unused LSBs = 0).

Slot 9: PCM Playback LFE Channel

Outputs the low frequency effects channel DAC data (16-bit resolution, MSB first, unused LSBs = 0).

Slot 10: Not used

Slots 10 is not used by the ACC.

Downloaded from Arrow.com.

Slot 11: Modem Headset DAC

Outputs the headset DAC data (16-bit resolution, MSB first, unused LSBs = 0).

Slot 12: GPIO Control

This slot allows the ACC to set the value of the AC97 codec's GPIO output pins.

bits [19:4] Value of the GPIO pins (Up to 16 can be implemented)

bits [3:0] Reserved

5.3.4.3 AC Link Input Frame (AC_S_IN, AC_S_IN2)

The audio input frame data streams correspond to the time division multiplexed bundles of all digital input data coming from the AC97 codec. Each input frame contains 13, 20-bit incoming data slots, except for slot 0, which contains 16 bits. Slot 0 is a dedicated slot used for the AC Link protocol.

An audio input frame begins with a low-to-high transition of the AC_S_SYNC signal. AC_S_SYNC is synchronous to the rising edge of AC_CLK. The AC97 codec samples the AC_S_SYNC signal on the immediately following falling edge of the bit clock. The AC97 codec transmits data on each following rising edge of AC_CLK. The ACC samples the data on the falling edges of AC_CLK.

The serial input stream is MSB justified (MSB first) within each slot, and all non-valid bit positions stuffed with zeroes by the AC97 codec.

Slot 0: TAG

The first bit of the TAG slot (bit 15) is the Codec_Ready bit. The next 12 bits indicate the validity of the next 12 data slots.

Slot 1: Status Address / SLOTREQ Bits

The status address is the echo of the register address (index) that was sent to the codec on output slot 1 of the previous output frame. It indicates the address (index) of the register whose data is being returned in slot 2 of the input frame.

bit 19 Reserved (Stuffed with 0s)

bits [18:12] Control Register Index (Echo of register index for which data is being returned)

bits [11:2] SLOTREQ bits (For variable sampling rate)

bits [1:0] Reserved (Stuffed with 0s)

The SLOTREQ bits support the variable sample rate signaling protocol. With normal 48 KHz operation, these bits are always zero. When the AC97 codec is configured for a lower sample rate, some output frames will not contain samples because the AC Link always outputs frames at 48 KHz. The SLOTREQ bits serve as the codec's instrument to tell the ACC whether it needs a sample for a given slot on the next output frame. For each bit: 0 = Send data; 1 = Do NOT send data. If the codec does not request data for a given slot, the ACC should tag that slot invalid and not send PCM data. The mapping between SLOTREQ bits and output slots is given in Table 5-5. The SLOTREQ bits are independent of the validity of slot 1, and slot 1 is only tagged valid by the codec if it contains a register index.

Table 5-5. SLOTREQ to Output Slot Mapping

Bit	Slot Request	Notes
11	Slot 3	Left Channel Out (BM0)
10	Slot 4	Right Channel Out (BM0)
9	Slot 5	Modem Line 1 Out (BM2)
8	Slot 6	Center Out (BM4 if selected)
7	Slot 7	Left Surround Out (BM6)
6	Slot 8	Right Surround Out (BM6)
5	Slot 9	LFE Out (BM7)
4	Slot 10	Not Supported
3	Slot 11	Handset Out (BM4 if selected)
2	Slot 12	Not Supported

Slot 2: Status Data

The status data slot delivers 16-bit control register read data.

bits [19:4] Control Register Read Data (Stuffed with 0s if slot 2 is tagged "invalid" by slot 0)

bits [3:0] Reserved (Stuffed with 0s)

Slot 3: PCM Record Left Channel

Contains the left channel ADC input data (16-bit resolution, MSB first, unused LSBs = 0).

Slot 4: PCM Record Right Channel

Contains the right channel ADC input data (16-bit resolution, MSB first, unused LSBs = 0).

Slot 5: Modem Line 1 ADC

Contains the modem line 1 ADC input data (16-bit resolution, MSB first, unused LSBs = 0).

Slot 6: Optional Microphone Record Data

Contains the microphone ADC input data (16-bit resolution, MSB first, unused LSBs = 0).

Slots 7-10: Not Used

Slots 7-10 are reserved.

Downloaded from Arrow.com.

Slot 11: Modem Headset ADC

Contains the modem headset ADC input data (16-bit resolution, MSB first, unused LSBs = 0).

Slot 12: GPIO Status

This slot returns the pin status of the AC97 codec's GPIO pins (if implemented).

bits [19:4]	Value of the GPIO pins (Up to 16 can be implemented)
bits [3:1]	Reserved
bit 0	GPIO_INT input pin event interrupt (1 = Event; 0 = No Event)

Bit 0 indicates that there was a transition on one of the unmasked codec GPIO pins (see *AC97 Codec Specification v2.3* for details). If the Codec GPIO Interrupt Enable bit is set, then slot 12, bit 0 = 1 triggers an IRQ and sets the Codec GPIO Interrupt Flag bit.

5.3.5 AC Link Power Management

5.3.5.1 AC Link Power-down

The AC Link interface signals can be placed in a low power mode by programming the AC97 codec's Power-down Control/Status register. When this is performed, both the AC_CLK and AC_S_IN are brought to a low voltage level by the AC97 codec. This happens immediately following the write to the AC97 codec's Power-down Control/Status register, so no data can be transmitted in slots 3-12 for the frame signaling power-down. After powering down the AC Link, the ACC must keep AC_S_SYNC and AC_S_OUT low; hence, all the AC Link signals (input and output) are driven low.

AC_CLK is de-asserted at the same time that bit 4 of slot 2 is being transmitted on the AC Link. This is necessary because the precise time when the codec stops, AC_CLK is not known.

5.3.5.2 AC Link Wakeup (Warm Reset)

A warm reset re-activates the AC Link without altering the registers in the AC97 codec. The ACC signals the warm reset by driving AC_S_SYNC high for a minimum of 1 µs in the absence of the AC_CLK. This must not occur for a minimum of four audio frame periods following power-down (note that no bit clock is available during this time). AC_S_SYNC is normally a synchronous signal to AC_CLK, but when the AC97 codec is powered down, it is treated as an asynchronous wakeup signal. During wakeup, the AC97 codec does not re-activate the bit clock until AC_S_SYNC is driven high (for 1 µs minimum) and then low again by the ACC. Once AC_S_SYNC is driven low, AC_CLK is re-asserted.

See "Audio Driver Power-up/down Programming Model" on page 97 for additional power management information and programming details.

5.3.6 Bus Mastering Buffer Scheme

Because the bus masters must feed data to the codec without interruption, they require a certain amount of data buffering.

The 32-bit bus masters (stereo) use 24 bytes of buffer space, and the 16-bit bus masters (mono) use 20 bytes of buffer space. A bus master always does buffer fill/empty requests whenever it can transfer 16 bytes of data. It attempt to do transfers of 16 bytes on a 16-byte boundary, whenever possible. A bus master may do a transfer of more (if it is just starting, and sufficient buffer space is available) or less than 16 bytes (to bring itself onto a 16-byte boundary). It may also do a transfer of less than 16 bytes if the size of the physical memory region causes it to end on a non-16 byte boundary.

Some important details on how a bus master behaves:

- When an outgoing bus master is enabled, it begins sending data over the AC Link as soon as data is available in its buffer. The slot valid tag for its slot is asserted beginning with the first audio sample.
- When a bus master is disabled while operating, any data in its buffer is lost. Re-enabling the bus master begins by fetching a Physical Region Descriptor (PRD).
- If the bus master is paused during recording or playback, the data in its buffer remains there in a frozen state. Once resumed, it continues as if nothing has occurred. If the bus master is playing back data, the output slots corresponding to the bus master are tagged invalid while it is in the paused state.
- If a buffer underrun occurs on an outgoing bus master, the output slots corresponding to the bus master are tagged invalid until data becomes available.
- If a buffer overrun occurs on an incoming bus master, samples coming in on the serial link are tossed away until space becomes available in the bus master's buffer.

Downloaded from Arrow.com.

5.3.7 ACC Software Programming

5.3.7.1 Physical Region Descriptor Table Address Register

Before a bus master starts a transfer, it must be programmed with a pointer to a PRD table. This is done by writing to the bus master's PRD Table Address register. This pointer sets the starting memory location of the PRD table. The PRDs in the PRD table describe the areas of memory that are used in the data transfer. The table must be aligned on a 4-byte boundary (DWORD aligned).

5.3.7.2 Physical Region Descriptor Format

Each physical memory region to be transferred is described by a PRD as illustrated in Table 5-6. The PRD table must be created in memory by software before the bus master can be activated. When the bus master is enabled by setting its Bus Master Enable bit, data transfer begins, with the PRD table serving as the bus master's "guide" for what to do. The bus master does not cache PRDs.

A PRD entry in the PRD table consists of two DWORDs. The first DWORD contains a 32-bit pointer to a buffer to be transferred (Memory Region Base Address). The second DWORD contains control flags and a 16-bit buffer size value. The maximum amount of audio data that can be transferred for a given PRD is 65534 bytes for mono streams and 65532 bytes for stereo streams.

For stereo streams (bus masters 0, 1, and 6):

Memory Region Base Address and Size should be a multiple of four (DWORD aligned). This ensures an equal number of left and right samples.

For mono streams (bus masters 2, 3, 4, 5, and 7):

Memory Region Base Address and Size should be a multiple of two (WORD aligned).

Descriptions of the control flags are:

- **End of Transfer (EOT)** - If set in a PRD, this bit indicates the last entry in the PRD table. The last entry in a PRD table must have either the EOT bit or the JMP bit set. A PRD can not have both the JMP and EOT bits set. When the bus master reaches an EOT, it stops and clears its Bus Master Enable bit. If software desires an IRQ to be generated with the EOT, it must set the EOP bit and the EOT bit on the last PRD entry.
- **End of Page (EOP)** - If set in a PRD and the bus master has completed the PRD's transfer, the End of Page bit is set (in the IRQ status register) and an IRQ is generated. If a second EOP is reached due to the completion of another PRD before the End of Page bit is cleared, the Bus Master Error bit is set (in the IRQ status register) and the bus master pauses. In this paused condition, reading the IRQ status register clears both the Bus Master Error and the End of Page bits, and the bus master continues.
- **Jump (JMP)** - This PRD is special. If set, the Memory Region Base Address is now the target address of the JMP. The target address of the JMP must point to another PRD. There is no audio data transfer with this PRD. This PRD allows the creation of a looping mechanism. If a PRD table is created with the JMP bit set in the last PRD, the PRD table does not need a PRD with the EOT bit set. A PRD can not have both the JMP and EOT bits set.

Table 5-6. Physical Region Descriptor (PRD) Format

	Byte 3								Byte 2								Byte 1								Byte 0							
DWORD	31	30	29	28	27	26	25	24	23	22	21	20	19	18	17	16	15	14	13	12	11	10	9	8	7	6	5	4	3	2	1	0
0	Memory Region Base Address [31:0] (Address of Audio Data Buffer)																															
1	EOT	EOP	JMP	Reserved													Size [15:0]															

Downloaded from Arrow.com.

5.3.7.3 PCM Data Format and Byte Order

Table 5-7 shows an example of how PCM audio data is stored in memory (byte order and channel order). Each row represents a byte in memory, in order of increasing addresses. The byte order can be configured via the Bus Master Command Register for Intel (little endian) or Motorola (big endian) byte ordering. Changing the byte order only affects how PCM data is interpreted. PRD entries and register contents are always little endian. The two channel format applies to the 32-bit bus masters handling left and right input and output. The single channel format applies to the 16-bit bus masters. The 32-bit bus masters always operate on stereo data, and the 16-bit bus masters always operate on mono data. Since there is no special mode for playing monaural sound through the main channels (left and right), it is the responsibility of the software to create stereo PCM data with identical samples for the left and right channels to effectively output monaural sound.

5.3.7.4 Programming Model

Audio Playback/Record

The following discussion explains, in steps, how to initiate and maintain a bus master transfer between memory and an audio slave device. In the steps, the reference to **Example** refers to Figure 5-7:

1) Software creates a PRD table in system memory. The last PRD entry in a PRD table must have the EOT or JMP bit set.

   Example - Assume the data is outbound. There are three PRDs in the example PRD table. The first two PRDs (PRD_1, PRD_2) have only the EOP bit set. The last PRD (PRD_3) has only the JMP bit set. This example creates a PRD loop.

Table 5-7. PCM Data format (Byte and Channel Ordering)

2 Channel, Little Endian			1 Channel, Little Endian		2 Channel, Big Endian			1 Channel, Big Endian	
Sample	**Channel**	**Byte**	**Sample**	**Byte**	**Sample**	**Channel**	**Byte**	**Sample**	**Byte**
0	Left	Low	0	Low	0	Left	High	0	High
0	Left	High	0	High	0	Left	Low	0	Low
0	Right	Low	1	Low	0	Right	High	1	High
0	Right	High	1	High	0	Right	Low	1	Low
1	Left	Low	2	Low	1	Left	High	2	High
1	Left	High	2	High	1	Left	Low	2	Low
1	Right	Low	3	Low	1	Right	High	3	High
1	Right	High	3	High	1	Right	Low	3	Low

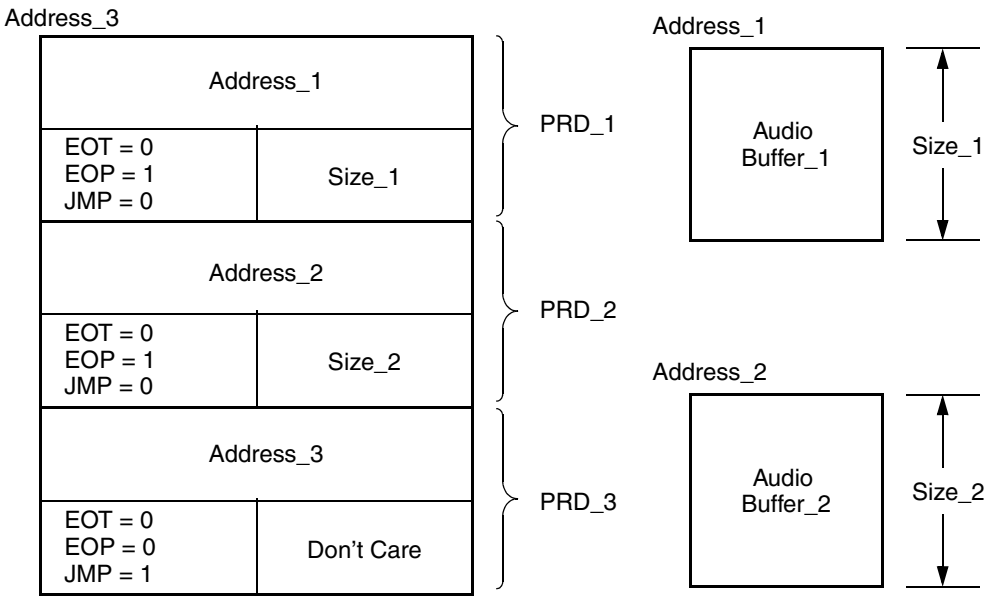

Figure 5-7. ACC PRD Table Example

Downloaded from Arrow.com.

2) Software loads the starting address of the PRD table by programming the PRD Table Address register.

   Example - Program the PRD Table Address register with Address_3.

3) Software must fill the buffers pointed to by the PRDs with audio data. It is not absolutely necessary to fill the buffers; however, the buffer filling process must stay ahead of the buffer emptying. The simplest way to do this is by using the EOP flags to generate an interrupt when an audio buffer is empty.

   Example - Fill Audio Buffer_1 and Audio Buffer_2. Ensure than an interrupt service routine is assigned to the audio interrupt.

4) Read the IRQ Status register to clear the Bus Master Error and End of Page flags (if set).

   Program the AC97 codec properly to receive audio data (mixer settings, etc.).

   Engage the bus master by setting the Bus Master Enable bit.

   The bus master reads the PRD entry pointed to by the PRD Table Address register. Using the address from the PRD, it begins the audio transfer. The PRD Table Address register is incremented by eight.

   Example - The bus master is now properly programmed to transfer Audio Buffer_1 to a specific slot(s) in the AC97 interface.

5) The bus master transfers data from memory and sends it to the AC97 codec. At the completion of each PRD, the bus master's next response depends on the settings of the flags in the PRD.

   Example - After transferring the data described by PRD_1, an interrupt is generated because the EOP bit is set, and the bus master continues on to PRD_2. The interrupt service routine reads the Second Level Audio IRQ Status register to determine which bus master to service. It refills Audio Buffer_1 and then reads the bus master's IRQ Status register to clear the End of Page flag and the interrupt.

   After transferring the data described by PRD_2, another interrupt is generated because the EOP bit is set, and the bus master continues on to PRD_3. The interrupt service routine reads the Second Level Audio IRQ Status register to determine which bus master to service. It refills Audio Buffer_2 and then reads the bus master's IRQ Status register to clear the End of Page flag and the interrupt.

   PRD_3 has the JMP bit set. This means the bus master uses the address stored in PRD_3 (Address_3) to locate the next PRD. It does not use the address in the PRD Table Address register to get the next PRD. Since Address_3 is the location of PRD_1, the bus master has looped the PRD table. No interrupt is generated for PRD_3.

Pausing the bus master can be accomplished by setting the Bus Master Pause bit in its control register. The bus master stops immediately on the current sample being processed. Upon resuming, the bus master (clearing the Bus Master Pause bit), resumes on the exact sample where it left off.

The bus master can be stopped in the middle of a transfer by clearing the Bus Master Enable bit in its control register. In this case, the bus master will not remember what sample it left off on. If it is re-enabled, it begins by reading the PRD entry pointed to by its PRD Table Address register. If software does not re-initialize this pointer, it point to the PRD entry immediately following the PRD entry that was being processed. This may be an invalid condition if the bus master was disabled while processing the last PRD in a PRD table (PRD Table Address register pointing to memory beyond the table).

Note that if the Bus Master Error bit is set, the interrupt service routine should refill two buffers instead of one, because a previous interrupt was missed (unless it was intentionally missed). For this to work correctly, the service routine should read the Second Level Audio IRQ Status register, fill the buffer of the bus master needing service, read the bus master's IRQ Status register, and then fill the next buffer if the Bus Master Error bit was set. Failing to fill the first buffer before reading the IRQ Status register would possibly resume the bus master too early and result in sound being played twice or data being overwritten (if recording).

Codec Register Access

The ACC provides a set of registers that serve as an interface to the AC97 codec's registers. The Codec Command register allows software to initiate a read or a write of a codec register. The Codec Status register allows software to read back the data from the codec after a read operation has completed. Since the AC Link runs very slow relative to core CPU speed (and therefore software speed), it is necessary for software to wait between issuing commands to the codec.

For register reads, software specifies a command address and sets both the read/write flag and the Codec Command New flag in the Codec Control register. Software must then wait for the Codec Status New bit to be set before using the returned status data in the Codec Status register. Before issuing another read command, software must wait for the Codec Command New flag to be cleared by hardware. (Note: Codec Command New will clear before Codec Status New is set; therefore, a second read can be issued before the result of the current read is returned).

For register writes, software specifies a command address and command data using the Codec Control register. At the same time it must set the Codec Command New flag. Before issuing another read or write, software must wait for the Codec Command New flag to clear. See Section 6.3 "AC97 Audio Codec Controller Register Descriptions" for details on the Codec register interface.

Downloaded from Arrow.com.

Audio Driver Power-up/down Programming Model

The ACC contains Model Specific Registers (MSRs) that relate to a very low level power management scheme, but are discrete from the power management features of the codec and the device driver programming model. This section covers the power management features for the device driver.

See Section 5.3.5 "AC Link Power Management" on page 93 for power management hardware details.

The following sections outline how the device driver should perform power management.

Power-down Procedure

1) Disable or pause all bus masters using their bus master command register.
2) It may be necessary to determine if a second codec is being used, and if so, verify that the power-down Semaphore for Secondary Codec bit is set before proceeding (to insure that the modem driver has prepared the second codec for power-down, if necessary).
3) Using the Codec Control register, access the primary codec's registers and program the codec to power-down. Also, simultaneously write to the AC Link Shutdown bit in the Codec Control register (ACC I/O Offset 0Ch[18]).
4) The ACC and codec power-down once the command is received by the codec. All contents of the ACC and codec registers are preserved during the power-down state.
5) To enable the GPIO wakeup interrupt, wait for an additional two audio frame periods (42 µs) before setting the GPIO Wakeup Interrupt Enable bit (ACC I/O Offset 00h[29]). Failure to wait causes false interrupt events to occur.

Power-up Procedure

1) If GPIO Wakeup Interrupt Enable (ACC I/O Offset 00h[29]) was set in the power-down procedure, it is automatically disabled upon power-up.
2) Set the AC Link Warm Reset bit in the Codec Control register (ACC I/O Offset 0Ch[17]). This initiates the warm reset sequence.
3) Wait for the Codec Ready bit(s) in the Codec Status register (ACC I/O Offset 08h[23:22]) to be asserted before accessing any codec features or enabling any bus masters.

Notes:

1) If the GPIO Wakeup Interrupt Enable (ACC I/O Offset 00h[29]) is set, and an interrupt occurs, it is detected and fired, but the interrupt does not wakeup the codec and ACC. The hardware will only wakeup if the software responds to the interrupt and performs the power-up procedure.
2) Once software has issued a power-down, it must not perform the power-up procedure for at least six audio frame periods (about 0.125 ms or 125 µs). Doing so could lock up the codec or ACC.
3) If the system has cut off power to the codec and restarted it, it is not necessary to initiate a warm reset. The AC Link Shutdown should be cleared manually to restart the operation of the AC Link.

Downloaded from Arrow.com.

5.4 IDE Controller

The hard disk controller is an ATA-6 compatible IDE controller. This controller supports UDMA (up to UDMA mode 5), MDMA, and PIO modes. The controller can support one channel (two devices).

The IDE interface provides a variety of features to optimize system performance, including 32-bit disk access, post write buffers, bus master, MDMA, look-ahead read buffer, and prefetch mechanism.

The IDE interface timing is completely programmable. Timing control covers the command active and recover pulse widths, and command block register accesses. The IDE data-transfer speed for each device on each channel can be independently programmed allowing high speed IDE peripherals to coexist on the same channel as older, compatible devices. Faster devices must be ATA-6 compatible.

The IDE controller also provides a software-accessible buffered reset signal to the IDE drive. The IDE_RESET# signal is driven low during system reset and can be driven low or high as needed for device power off conditions.

Features include:

- ATA-6 compliant IDE controller
- Supports PIO (mode 0 to 4), MDMA (mode 0 to 2), and UDMA (mode 0 to 5).
- Supports one channel, two devices
- Allows independent timing programming for each device

5.4.1 PIO Modes

The IDE data port transaction latency consists of address latency, asserted latency, and recovery latency. Address latency occurs when a PCI master cycle targeting the IDE data port is decoded, and the IDE_ADDR[2:0] and IDE_CS# lines are not set up. Address latency provides the setup time for the IDE_AD[2:0] and IDE_CS# lines prior to IDE_IOR# and IDE_IOW#.

Asserted latency consists of the I/O command strobe assertion length and recovery time. Recovery time is provided so that transactions may occur back-to-back on the IDE interface without violating minimum cycle periods for the IDE interface.

If IDE_RDY0 is asserted when the initial sample point is reached, no wait states are added to the command strobe assertion length. If IDE_RDY0 is negated when the initial sample point is reached, additional wait states are added.

Recovery latency occurs after the IDE data port transactions have completed. It provides hold time on the IDE_AD[2:0] and IDE_CS# lines with respect to the read and write strobes (IDE_IOR# and IDE_IOW#).

The PIO portion of the IDE registers is enabled through the IDE Controller Drive Timing Control register (IDE_DTC) (MSR 51300012h)

The IDE channel and devices can be individually programmed to select the proper address setup time, asserted time, and recovery time.

The bit formats for these registers are shown in Section 6.5.3 "IDE Controller Native Registers" on page 341.

5.4.2 Bus Master Mode

An IDE bus master is provided to perform the data transfers for the IDE channel. The IDE controller off-loads the CPU and improves system performance.

The bus master mode programming interface is an extension of the standard IDE programming model. This means that devices can always be dealt with using the standard IDE programming model, with the master mode functionality used when the appropriate driver and devices are present. Master operation is designed to work with any IDE device that supports DMA transfers on the IDE bus. Devices that work in PIO mode can only use the standard IDE programming model.

The IDE bus master uses a simple scatter/gather mechanism, allowing large transfer blocks to be scattered to or gathered from memory. This cuts down on the number of interrupts to and interactions with the CPU.

5.4.2.1 Physical Region Descriptor Table Address

Before the controller starts a master transfer it is given a pointer to a Physical Region Descriptor Table. This pointer sets the starting memory location of the Physical Region Descriptors (PRDs). The PRDs describe the areas of memory that are used in the data transfer. The PRDs must be aligned on a 4-byte boundary and the table cannot cross a 64 KB boundary in memory.

5.4.2.2 IDE Bus Master Registers

The IDE Bus Master registers have an IDE Bus Master Command register and Bus Master Status register (IDE I/O Address 00h and 02h respectively). These registers can be accessed by byte, WORD, or DWORD.

Downloaded from Arrow.com.

5.4.2.3 Physical Region Descriptor Format

Each physical memory region to be transferred is described by a Physical Region Descriptor (PRD) as illustrated in Table 5-8. When the bus master is enabled (Command register bit 0 = 1), data transfer proceeds until each PRD in the PRD table has been transferred. The bus master does not cache PRDs.

The PRD table consists of two DWORDs. The first DWORD contains a 32-bit pointer to a buffer to be transferred. This pointer must be 2-byte aligned. The second DWORD contains the size in bytes of the buffer and the EOT (End Of Table) flag. The size must be in multiples of 1 WORD (2 bytes) or zero (which means a 64 KB transfer). The EOT bit (bit 31) must be set to indicate the last PRD in the PRD table.

5.4.2.4 Programming Model

The following steps explain how to initiate and maintain a bus master transfer between memory and an IDE device:

1) Software creates a PRD table in system memory. Each PRD entry is 8 bytes long, consisting of a base address pointer and buffer size. The maximum data that can be transferred from a PRD entry is 64 KB. A PRD table must be aligned on a 4-byte boundary. The last PRD in a PRD table must have the EOT bit set.
2) Software loads the starting address of the PRD table by programming the PRD Table Address register.
3) Software must fill the buffers pointed to by the PRDs with IDE data.
4) Write 1 to the Bus Master Interrupt bit and Bus Master Error (IDE I/O address 02h[2,1]) to clear the bits.
5) Set the correct direction to the Read or Write Control bit (IDE I/O address 00h[3]).

   Engage the bus master by writing a 1 to the Bus Master Control bit (IDE I/O address 00h[0]).

   The bus master reads the PRD entry pointed to by the PRD Table Address register and increments the address by 08h to point to the next PRD. The transfer begins.
6) The bus master transfers data to/from memory responding to bus master requests from the IDE device until all PRD entries are serviced.
7) The IDE device signals an interrupt once its programmed data count has been transferred.
8) In response to the interrupt, software resets the Bus Master Control bit (IDE I/O address 00h[0]). It then reads the status of the controller and IDE device to determine if the transfer is successful.

Table 5-8. Physical Region Descriptor Format

	Byte 3								Byte 2								Byte 1								Byte 0							
DWORD	**31**	**30**	**29**	**28**	**27**	**26**	**25**	**24**	**23**	**22**	**21**	**20**	**19**	**18**	**17**	**16**	**15**	**14**	**13**	**12**	**11**	**10**	**9**	**8**	**7**	**6**	**5**	**4**	**3**	**2**	**1**	**0**
0	Memory Region Physical Base Address [31:1] (IDE Data Buffer)																															0
1	EOT	Reserved															Size [15:1]															0

Downloaded from Arrow.com.

5.4.2.5 UDMA Mode

The IDE controller supports UDMA modes 0 to 5. It utilizes the standard IDE bus master functionality to interface, initiate, and control the transfer. The ATA specification also incorporates a Cyclic Redundancy Checking (CRC) error checking protocol to detect errors.

The UDMA protocol requires no extra signal pins on the IDE connector. The IDE controller redefines three standard IDE control signals when in UDMA mode. These definitions are shown in Table 5-9.

Table 5-9. UDMA Signal Definitions

IDE Channel Signal	UDMA Read Cycle	UDMA Write Cycle
IDE_IOW#	STOP	STOP
IDE_IOR#	DMARDY#	STROBE
IDE_RDY0	STROBE	DMARDY#

All other signals on the IDE connector retain their functional definitions during the UDMA operation.

IDE_IOW# is defined as STOP for both read and write transfers to request to stop a transaction.

IDE_IOR# is redefined as DMARDY# for transferring data from the IDE device to the IDE controller. It is used by the IDE controller to signal when it is ready to transfer data and to add wait states to the current transaction. The IDE_IOR# signal is defined as STROBE for transferring data from the IDE controller to the IDE device. It is the data strobe signal driven by the IDE controller on which data is transferred during each rising and falling edge transition.

IDE_IORDY is redefined as STROBE for transferring data from the IDE device to the IDE controller during a read cycle. It is the data strobe signal driven by the IDE device on which data is transferred during each rising and falling edge transition. IDE_IORDY is defined as DMARDY# during a write cycle for transferring data from the IDE controller to the IDE device. It is used by the IDE device to signal when it is ready to transfer data and to add wait states to the current transaction.

UDMA data transfer consists of three phases: a startup phase, a data transfer phase, and a burst termination phase.

The IDE device begins the startup phase by asserting IDE_DREQ. When ready to begin the transfer, the IDE controller asserts IDE_DACK#. When IDE_DACK# is asserted, the IDE controller drives IDE_CS0# and IDE_CS1# asserted, and IDE_ADDR[2:0] low. For write cycles, the IDE controller negates STOP, waits for the IDE device to assert DMARDY#, and then drives the first data WORD and STROBE signal. For read cycles, the IDE controller negates STOP and asserts DMARDY#. The IDE device then sends the first data WORD and asserts STROBE.

The data transfer phase continues the burst transfers with the IDE controller and the IDE device via providing data, toggling STROBE and DMARDY#. IDE_DATA[15:0] is latched by the receiver on each rising and falling edge of STROBE. The transmitter can pause the burst cycle by holding STROBE high or low, and resume the burst cycle by again toggling STROBE. The receiver can pause the burst cycle by negating DMARDY# and resumes the burst cycle by asserting DMARDY#.

The current burst cycle can be terminated by either the transmitter or receiver. A burst cycle must first be paused, as described above, before it can be terminated. The IDE controller can then stop the burst cycle by asserting STOP, with the IDE device acknowledging by negating IDE_DREQ0. The transmitter then drives the STROBE signal to a high level. The IDE controller then puts the result of the CRC calculation onto IDE_DATA[15:0] while de-asserting IDE_DACK0#. The IDE device latches the CRC value on the rising edge of IDE_DACK0#.

The CRC value is used for error checking on UDMA transfers. The CRC value is calculated for all data by both the IDE controller and the IDE device during the UDMA burst transfer cycles. This result of the CRC calculation is defined as all data transferred with a valid STROBE edge while IDE_DACK0# is asserted. At the end of the burst transfer, the IDE controller drives the result of the CRC calculation onto IDE_DATA[15:0], which is then strobed by the de-assertion of IDE_DACK0#. The IDE device compares the CRC result of the IDE controller to its own and reports an error if there is a mismatch.

The timings for UDMA are programmed in the DMA control register:

- IDE Controller UDMA Extended Timing Control Register (IDE_ETC) (MSR 51300014h)

The bit formats for these registers are given in Section 6.5.3 "IDE Controller Native Registers" on page 341.

Downloaded from Arrow.com.

5.5 Universal Serial Bus Controller

The Universal Serial Bus (USB) Controller module (Figure 5-8) consists of a USB 2.0 Enhanced Host Controller Interface (EHCI) compliant host controller, with a USB 1.1 Open Host Controller Interface (OHCI) compliant companion controller, and a USB 2.0 device controller. The USB module is connected via the GeodeLink™ Adapter (GLA) to the processor and other modules.

There are four USB 2.0 ports. The ports are dependent on the type of attached device, either associated with the EHC or OHC interface.

Furthermore Port 4 can be configured as a device. The functional descriptions of the blocks in Figure 5-8 are described in the following subsections.

5.5.1 GeodeLink™ Adapter

The GeodeLink™ Adapter (GLA) translates GeodeLink transactions to/from local bus transactions. The GLA interfaces to a 64-bit GLIU (GeodeLink Interface Unit) and a 32-bit local bus. The GLA supports in-bound memory that targets the USB module. It also supports in-bound MSR transactions to the MSRs, which are located in the GLA. The GLA supports out-bound memory requests only. I/O and MSR transactions from the USB never occur. The GLA contains an arbiter that arbitrates the bus master requests of the OHC, the EHC, and the device controller. A prefetch logic is implemented for bus master read performance improvement to cover memory read latencies.

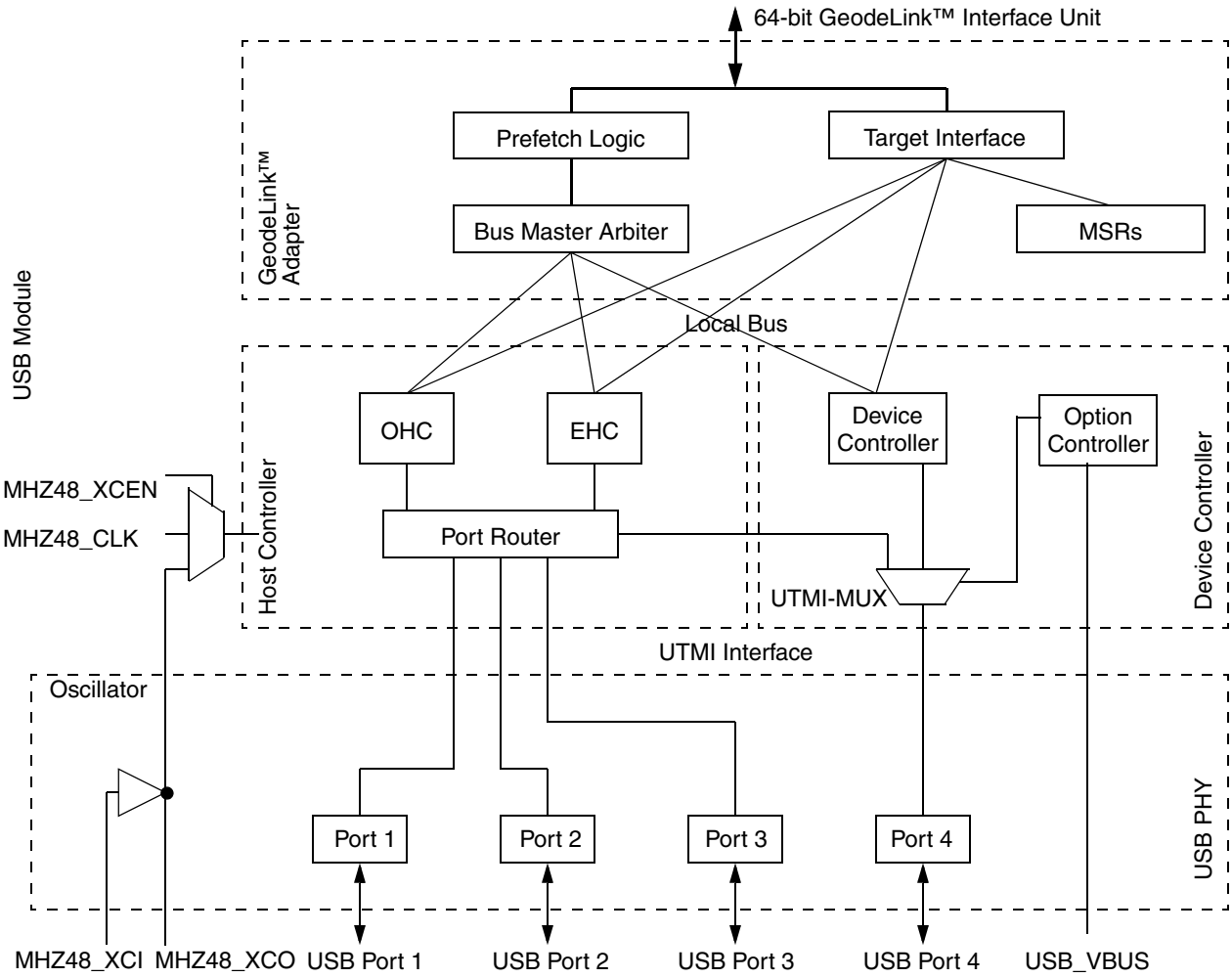

Figure 5-8. USB Controller Block Diagram

Downloaded from Arrow.com.

5.5.2 Host Controller

The host controller is responsible for:

- Detecting the attachment and removal of USB devices.
- Managing control flow between the host and USB devices.
- Managing data flow between the host and USB devices.
- Collecting status and activity statistics.
- Controlling power supply to attached USB devices.
- Controlling the association to either the OHCI or the EHCI via the port router
- Root Hub functionality to support up to four ports

The USB system software on the host manages interactions between USB devices and host-based device software. There are five areas of interactions between the USB system software and device software:

1) Device enumeration and configuration.
2) Isochronous data transfers.
3) Asynchronous data transfers.
4) Power management.
5) Device and bus management information.

Whenever possible, the USB system software uses existing host system interfaces to manage the above interactions.

Attached devices are recognized by the USB PHY as either USB 1.1 compliant (full speed and low speed) or USB 2.0 compliant (high speed) devices. Low or full speed devices attached to USB ports are associated with the OHC and high speed devices are associated with the EHC.

The interface combines responsibility for executing bus transactions requested by the host controller as well as the hub and port management specified by USB.

5.5.3 Device Controller

USB Port 4 can be configured alternatively as a device port. The device supports four bidirectional endpoints (ep1 ... ep4) plus the default endpoint ep0. Endpoint ep0 only supports control traffic. The enpoints ep1...ep4 can be programmed to support either control, bulk or interrupt traffic. The maximum packet size is only restricted by the sum of all IN endpoints. Maximum packet size is less than 1.5 KB. USB Port 4 can be configured as a device by programming the PMUX bit (UOC Memory Offset 04h[1:0]).

5.5.4 USB Option Controller

The basic functionality is to allow the software to assign the shared USB Port 4 to either the host controller or the device controller, and to provide additional information about the status of the USB device port.

5.5.4.1 Port Multiplexing

The PMUX bit and its alias (UOC Memory Offset 0Ch[1:0]) are used to control the assignment of USB Port 4 (USB4_DATPOS (ball G17)/USB4_DATNEG (ball G16)) to either the host or the device controller or to inactivate that port.

Software must take precautions not to change port assignment while USB traffic occurs on the USB Port 4, and must first ensure that the currently associated controller has ceased any USB traffic before changing the port assignment. This may imply reading the appropriate controller status registers or interacting with higher levels of the controller software drivers.

PUEN (UOC Memory Offset 04h[2]) is only valid when the Port 4 is assigned to the device controller.

Downloaded from Arrow.com.

5.6 Diverse Integration Logic

The Diverse Integration Logic (DIVIL) connects a series of Local bus devices to the GeodeLink™ architecture. Figure 5-9 illustrates how the DIVIL (within the dashed lines) interfaces with the other devices of the Diverse Device. The main blocks of the DIVIL are: Address Decode, Standard MSRs, Local BARs, and Data Out Mux (DOM).

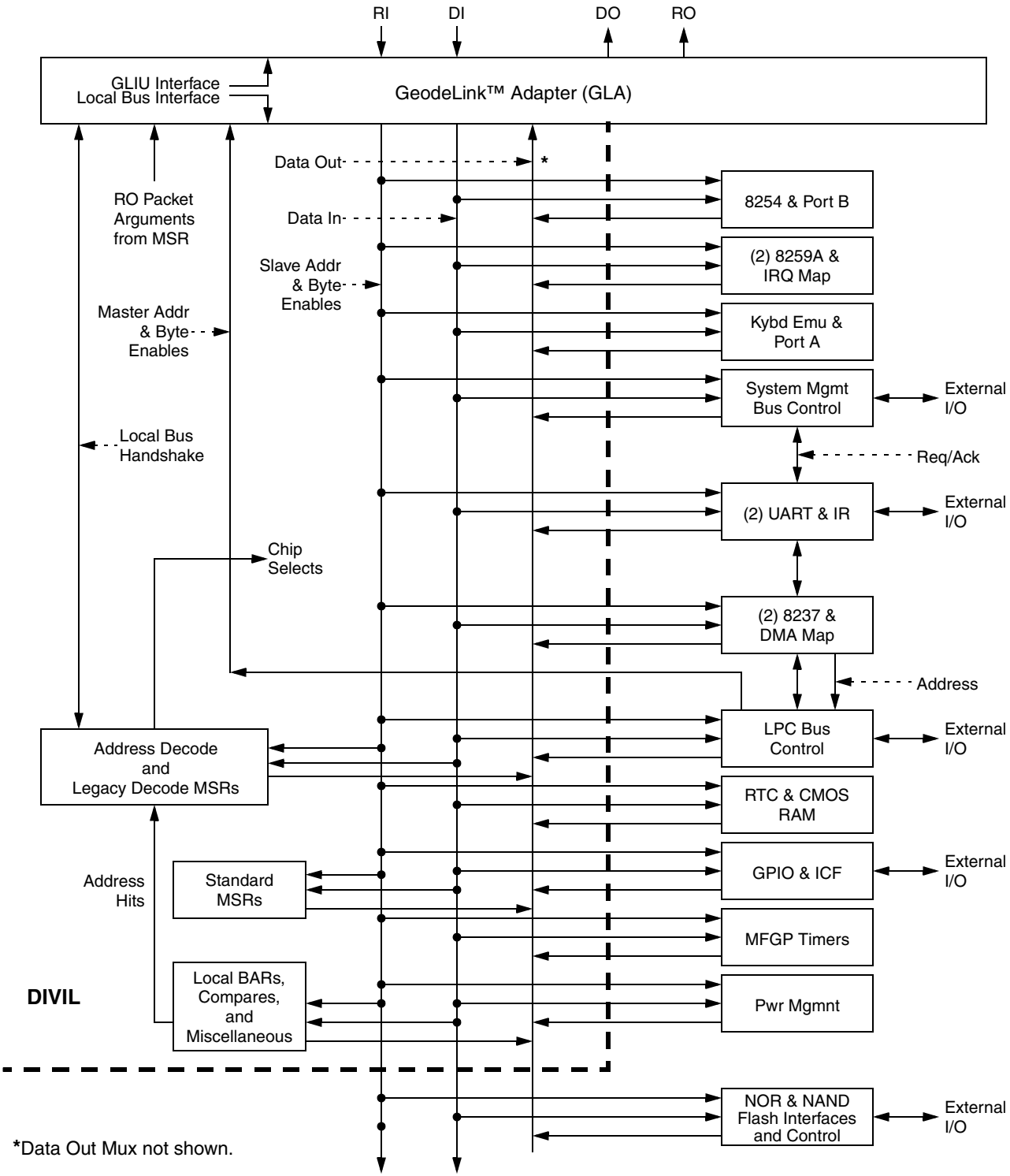

Figure 5-9. Diverse Logic Block Diagram

Downloaded from Arrow.com.

- **Address Decode -** Decodes the upper Local bus address bits to select a target slave. Most of the legacy devices have fixed addresses or are selectable between a small number of selectable I/O addresses. However, many of the functions are relocatable via a Local Base Address Register (LBAR) established via an MSR. Address Decode also detects special GLIU cycles, such as Shutdown, and takes appropriate action.
- **Standard MSRs -** Includes the Standard GeodeLink Device MSRs found in all GeodeLink Devices: Capabilities, Master Configuration, SMI Control, Error Control, Power Management, and Diagnostics.
- **Local BARs -** Local Base Address Registers (LBARs) establish the location of non-legacy functions within the Diverse Device. The module also includes logic to compare the current bus cycle address to the LBAR to detect a hit. For the I/O LBARs, the I/O address space 000h-4FFh is off limits. No I/O LBAR is allowed to point to this space.
- **Data Out Mux (DOM) -** This mux is not explicitly illustrated. Each function above produces a single output to the DIVIL. The DIVIL DOM has a port for each of the functions and is responsible for selecting between them.

5.6.1 LBARs and Comparators

The LBARs are used to establish the address and hence, chip select location of all functions that do not have fixed legacy addresses. This block also has comparators to establish when a current bus cycle address hits an LBAR. A hit is passed to the address decode block and results in a chip select to the target device if there are no conflicts. The mask and base address values are established via an MSR.

5.6.1.1 Fixed Target Size I/O LBARs

This discussion applies to the following LBARs:

- MSR 51400008h: IRQ Mapper (DIVIL_LBAR_IRQ)
- MSR 5140000Bh: SMB (DIVIL_LBAR_SMB)
- MSR 5140000Ch: GPIO and ICFs (DIVIL_LBAR_GPIO)
- MSR 5140000Dh: MFGPTs (DIVIL_LBAR_MFGPT)
- MSR 5140000Eh: ACPI (DIVIL_LBAR_ACPI)
- MSR 5140000Fh: Power Management Support (DIVIL_LBAR_PMS)

The IO_MASK only applies to the upper bits [15:12] (see Figure 5-10). Normally, one would set all the mask bits (i.e., no mask on upper bits). Mask or clear bits only if address wrapping or aliasing is desired.

- **Rule.** When a mask bit is cleared, the associated bit in the base address must also be cleared. Otherwise, the compare is not equal on these bits. This rule applies to both memory and I/O LBARs.

The base size is fixed based on the target. For example, the GPIO takes 256 bytes of address space. Therefore, the base only applies to bits [15:8]. Base bits [7:0] are always cleared by the hardware. Therefore, the base is always forced by hardware to be on a boundary the size of the target.

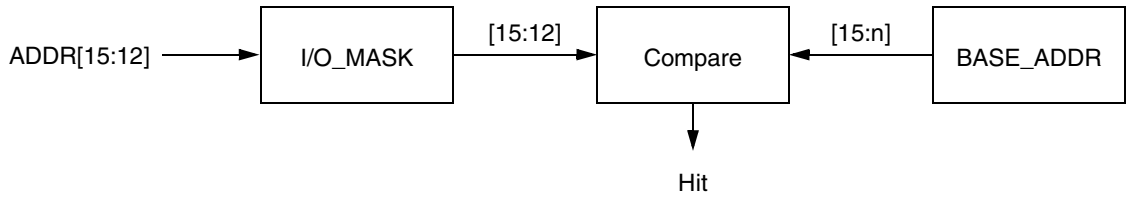

Notes:

1) The I/O mask is always 4 bits.

2) The I/O base address is variable ([15:n]).

The value of “n” depends on the I/O space requirements of the target. For example, a device needing 4, 8, 16, 32, 64, 128, or 256 bytes of I/O space has “n” = 2, 3, 4, 5, 6, 7, 8, respectively. The value “n” for various functions is:

MSR_LBAR_IRQ	n = 5	MSR_LBAR_SMB	n = 3
MSR_LBAR_GPIO	n = 8	MSR_LBAR_MFGPT	n = 6
MSR_LBAR_ACPI	n = 5	MSR_LBAR_PMS	n = 7
MSR_LBAR_FLASH_IO	n = 4		

Figure 5-10. I/O Space LBAR - Fixed Target Size

Downloaded from Arrow.com.

5.6.1.2 Variable Target Size I/O LBARs

This discussion applies to the following LBARs:

- MSR 51400010h: Flash Chip Select 0 (DIVIL_LBAR_FLSH0) with bit 34 = 0 (I/O mapped)
- MSR 51400011h: Flash Chip Select 1 (DIVIL_LBAR_FLSH1) with bit 34 = 0 (I/O mapped)
- MSR 51400012h: Flash Chip Select 2 (DIVIL_LBAR_FLSH2) with bit 34 = 0 (I/O mapped)
- MSR 51400013h: Flash Chip Select 3 (DIVIL_LBAR_FLSH3) with bit 34 = 0 (I/O mapped)

Note: Flash Chip Selects [3:0] can be programmed for I/O or a memory space. See Section 5.6.1.3 "Memory LBARs".

The I/O LBAR works just like the Fixed style, except the size of the IO_MASK has been expanded to cover the entire address range (see Figure 5-11). In the Fixed style, the IO_MASK applies to bits [15:12] but for Variable style, the IO_MASK applies to bits [15:4]. If all bits are set, then the target size is 16 bytes and base address bits [15:4] determine the base. Base bits [3:0] are a “don't care” and are effectively forced to zero by the hardware. Thus, the smallest I/O target is 16 bytes. As the LSBs of IO_MASK are cleared, the “target space” expands. For example, assume a 64-byte device is desired in I/O space. The IO_MASK = FFCh, base address bits [15:6] are programmed to the desired base, and base address bits [5:4] are cleared (see Section 5.6.1.1*, Rule* on page 104).

5.6.1.3 Memory LBARs

This discussion applies to the following LBARs:

- MSR 51400009h: KEL from USB OHC (DIVIL_LBAR_KEL)
- MSR 51400010h: Flash Chip Select 0 (DIVIL_LBAR_FLSH0) with bit 34 = 1 (memory mapped)
- MSR 51400011h: Flash Chip Select 1 (DIVIL_LBAR_FLSH1) with bit 34 = 1 (memory mapped)
- MSR 51400012h: Flash Chip Select 2 (DIVIL_LBAR_FLSH2) with bit 34 = 1 (memory mapped)
- MSR 51400013h: Flash Chip Select 3 (DIVIL_LBAR_FLSH3) with bit 34 = 1 (memory mapped)

Note: The Flash Chip Selects [3:0] can be programmed for an I/O space or a memory space.

For memory space, the LBAR works exactly like the Variable style (see Figure 5-12), except that clearing the LSBs of the MEM_MASK begins to make sense. For example, assume there is a 64 KB external ROM that will be connected to Flash Chip Select 0. Such a device needs address bits [15:0]. The MEM_MASK would normally be programmed to FFFF0h and base address bits [31:16] would be programmed to the desired base. The values in base address [15:12] would be cleared because the associated mask bits are cleared (see Section 5.6.1.1*, Rule* on page 104). Lastly, the memory target cannot be smaller than 4 KB.

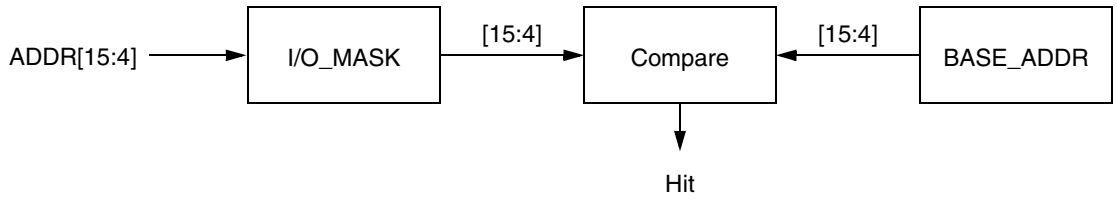

Figure 5-11. I/O Space LBAR - Variable Target Size

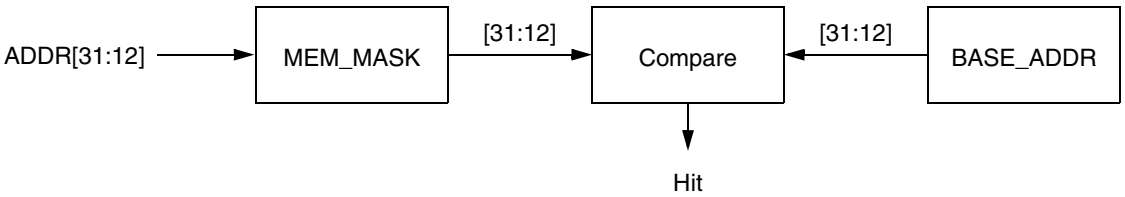

Note: The memory mask is always 20 bits, which is equal to the number of memory base address bits.

Figure 5-12. Memory Space LBAR

Downloaded from Arrow.com.

5.6.1.4 Miscellaneous Block

Special cycles are sent to the Miscellaneous block. They are decoded as given in Table 5-10. Note that the Halt special cycle depends on the value of the SPEC_CYC_MD bit (DIVIL MSR 51400014h[28]).

Soft IRQ and Soft Reset MSRs are decoded within the Miscellaneous block.

Each block in the Diverse Device generates an output to the DIVIL. The DIVIL DOM has a port for each of the functions and is responsible for selecting between them.

5.6.2 Standard MSRs

This block contains the Standard GeodeLink Device MSRs and their associated logic: Capabilities, Master Configuration, SMI Control, Error Control, Power Management, and Diagnostics. The Capabilities, Master Configuration, and Diagnostic MSRs are “passive” in that they contain values that have an effect elsewhere. The other MSRs have various “active” bits that are set and cleared via hardware/software interactions.

Table 5-10. Special Cycle Decodes

Cycle Type	Address	Function	Action
Write	00h	Shutdown	Send shutdown pulse to MSR_ERROR.
			Send shutdown pulse to MSR_SMI.
			If RESET_SHUT_EN (MSR 51400014h[31]) is high, send reset pulse to power management indicating shutdown reset.
SPEC_CYC_MD (MSR 51400014h[28]) = 0			
Write	01h	Halt	Send halt pulse to MSR_SMI.
SPEC_CYC_MD (MSR 51400014h[28]) = 1			
Write	02h	Halt	Send halt pulse to MSR_SMI.
	All other values	x86 Special	Discard with no side effects.
	All other values	Not Defined	Discard with no side effects.
Read	00h	Interrupt ACK	Send cycle to PIC.
			GeodeLink Adapter generates back-to-back bus cycles.
	All other values	Not Defined	Return zero with no side effects.

Downloaded from Arrow.com.

5.7 Programmable Interval Timer

The Programmable Interval Timer (PIT) generates programmable time intervals from the divided clock of an external clock signal of a crystal oscillator. The PIT (8254) has six modes of operation. Figure 5-13 shows the block diagram of the PIT and its connectivity to the Local bus.

The 8254 is comprised of three independently programmable counters. Each counter is 16 bits wide. A 14.318 MHz external clock signal (from a crystal oscillator or an external clock chip) is divided by 12 to generate 1.19 MHz, which is used as a clocking reference for these three counters.

Each counter is enabled or triggered with its GATE signal. Based on the counting mode, the counter concerned is activated by a high level or a low-to-high transition of its GATE signal.

Each counter has its output signal, whose shape is dependent upon the counter's operational mode. The Control register loads the counters and controls the various modes of operation. This Control register controls the operation mode of the control logic (counter state machine), which in turn controls the counter, the high-order and low-order output latches. A status latch is also present in the 8254 and is used to output status information.

Features include:

- Comprised of three 16-bit wide counters.
- Supports read-back and counter latch commands.
- Supports six modes of counting.
- Allows several counter latch commands in parallel with the read-back command.

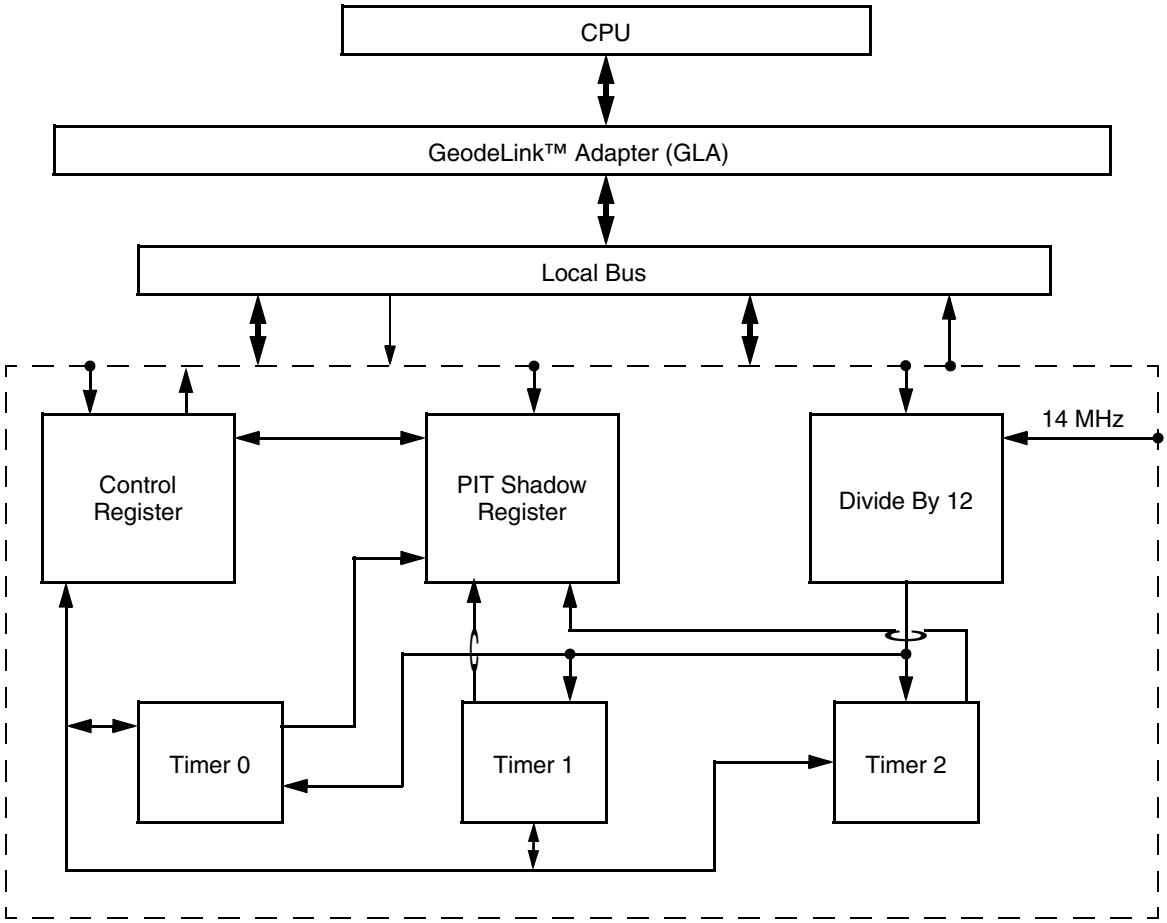

Figure 5-13. PIT Block Diagram

Downloaded from Arrow.com.

5.7.1 Programming the 8254 PIT

Programming of the 8254 PIT is initiated by first writing one control WORD via I/O Address 43h into the PIT Mode Control Word register (PIT I/O Address 43h). It is followed by writing one or two data bytes via the I/O address of the intended counter. If the Control register is loaded once, the counters may be overwritten with different values without accessing the Control register again. Table 5-11 lists the I/O addresses of the various registers.

Table 5-11. 8254 PIT Register Ports

I/O Address	Register	Access Type
040h	Counter 0	Read/ Write
041h	Counter 1	Read / Write
042h	Counter 2	Read / Write
043h	Control Word	Write

The Control register in the 8254 PIT is write-only, but certain control information can be determined by the read-back (read-status) command.

5.7.1.1 Write to the Counters

To load a counter with new values, a control WORD must output what defines the intended counter, number, and type of bytes to write, the counting mode and the counting format. I/O Address 43h[5:4] indicate whether low-order or high-order or both are going to be written. If low-order or high-order counter byte only is specified to be written, then only that byte can be read during a read access. According to bits I/O Address 43h[5:4], either write the low-order or the high-order or both into the counter after passing the control WORD. If bits [5:4] are 11, then a low-order byte must be written first, followed by a high-order byte. For small counting values or counting values that are multiples of 256, it is sufficient to pass the low-order or high-order counter byte. I/O Address 43h[3:1] define the counting mode of the counter selected by bits [5:4]. I/O Address 43h[0] defines the binary or BCD counting format. The maximum loadable count value is not FFFFh (binary counting) or 9999 (BCD counting), but 0. On the next CLK pulse, the counter concerned jumps to FFFFh or 9999. Once the value is decreased to 0 again, it outputs a signal according to the programmed mode. Therefore, the value 0 corresponds to 2^16 for binary counting and 10^4 for BCD counting.

Read from the Counters

There are three options for reading a counter in the 8254 PIT:

1) Counter Latch command
2) Read-back (read-status) command
3) Direct Read

To read a counter, the third option (Direct Read) should not be used. The Counter Latch command or Read-back command should be used to transfer the current state of the counter into its output latches. One or two successive read counter instructions for the port address of the counter concerned reads these latches. If only the low-order or high-order byte was written when the counter was loaded with the initial counting value, then read the current counting value of the initially written byte by a single read counter instruction. If both the low-order and high-order counter bytes are written previously, then to read the current counter value, two read counter instructions are needed. The 8254 PIT returns the low-order byte of the 16-bit counter with the first read counter instruction, and then the high-order byte with the second read counter instruction. If the content of the counter has been transferred once by a counter latch command into the output latches, then this value is held there until the CPU executes one or two counter read instructions, or until the corresponding counter is reprogrammed. Successive counter latch commands are ignored if the output latches have not been read before. Figure 5-14 shows the format of the control WORD for the counter latch command.

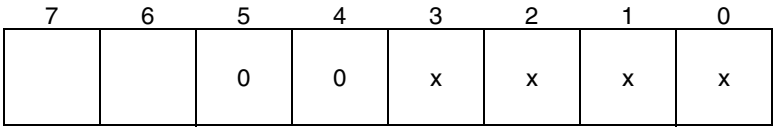

Bits [7:6] = Select counter to latch

Figure 5-14. PIT Counter Latch Command Format

Downloaded from Arrow.com.

The Read-back command present in the 8254 PIT is used to determine the current counter value and its status-like counting format, the counting mode, the low-order or high-order byte or both, being read or written, and the status of its output. Figure 5-15 shows the format of the Read-back command. The two most significant bits define the Read-back command with their value 11. CT and ST indicate that the value and the status of the counter are to be determined respectively. The C0-C2 bits define the counter whose value or status is to be determined. With the Read-back command, several counter latch commands can be issued in parallel by indicating several counters simultaneously with the C0-C2 bits. The 8254 then behaves as if several counter latch commands have been issued individually, and transfers the individual count values into the output latches of each counter. All successive counter latch commands, whether issued by its own counter or a next Read-back command, are ignored if the counter concerned has not been read by counter read instructions. To determine the programmed mode of a particular counter, set CT = 1 and ST = 0.

The Read-back command latches the current mode and provides a status byte (see Figure 5-16) at the port address of the counter concerned. This status byte is fetched by a counter read instruction. The PIN bit indicates the current status of the concerned counter's output pin. If PIN = 1, then the counter output is at logic 1, else at logic 0. Bit 0 shows whether the last written counter value has already been transferred to the counter. Not before zero = 0 is it meaningful to read back the counter value.

7	6	5	4	3	2	1	0
1	1	CT	ST	C2	C1	C0	x

CT: Determine count value of selected counter.
0 = Determine count value.
1 = Do not determine count value.

ST: Determine status of selected counter.
0 = Determine count status.
1 = Do not determine count status.

C2, C1, C0: Counter selection.
0 = Counter not selected.
1 = Counter selected.

Figure 5-15. PIT Read-Back Command Format

7	6	5	4	3	2	1	0
PIN	LOAD	LH		MODE			BCD

PIN: Status of counter output pin:
0 = Output pin low.
1 = Output pin high.

LOAD: Is counter loaded with a start value?
0 = Counter loaded, count value can be read.
1 = Counter not yet loaded, count value cannot be read.

LH: Corresponds to bits [5:4] of the Control Word register.

MODE: Corresponds to bits [3:1] of the Control Word register.

BCD: Corresponds to bit 0 of the Control Word register.

Figure 5-16. PIT Status Byte Format

Downloaded from Arrow.com.

5.8 Programmable Interrupt Control

The Programmable Interrupt Control (PIC) is illustrated in Figure 5-17. The major blocks are the Mapper and Masks (MM), Extended PIC (XPIC), and Legacy 8259A PICs (LPIC).

Features

- Two x86 compatible 8259A controllers
- 15-Level priority controller
- Programmable interrupt modes
- Individual request mask capability
- Individual edge/level controls
- Complete 8259A state read back via shadow registers
- Mapper routes 62 inputs to 15 legacy interrupts and one Asynchronous System Management Interrupt (ASMI)
- All 62 inputs individually maskable and status readable (MSRs 51400020h-51400027h or PIC I/O Offsets 00h-1Ch)

5.8.1 Mapper and Masks

This block maps and masks up to 62 interrupt sources to 60 discrete Extended PIC (XPIC) inputs. The sources are organized into four groups:

1) 15 Primary pre-defined inputs (see Table 5-12)
2) 15 LPC inputs pre-defined (see Table 5-12)
3) 16 Unrestricted Y inputs (see Table 5-13)
4) 16 Unrestricted Z inputs (see Table 5-14)

The outputs are organized into 16 groups of four signals each, except groups 0 and 2; they have two signals each. Each group is called an Interrupt Group (IG). Each pre-defined input is mapped to a specific IG. Each unrestricted input can be mapped to any IG except IG0. Regardless of mapping, any interrupt source can be masked to prevent participation in the interrupt process. Once the input to output map is established along with the mask values, signal flow from input to output is always completely combinational.

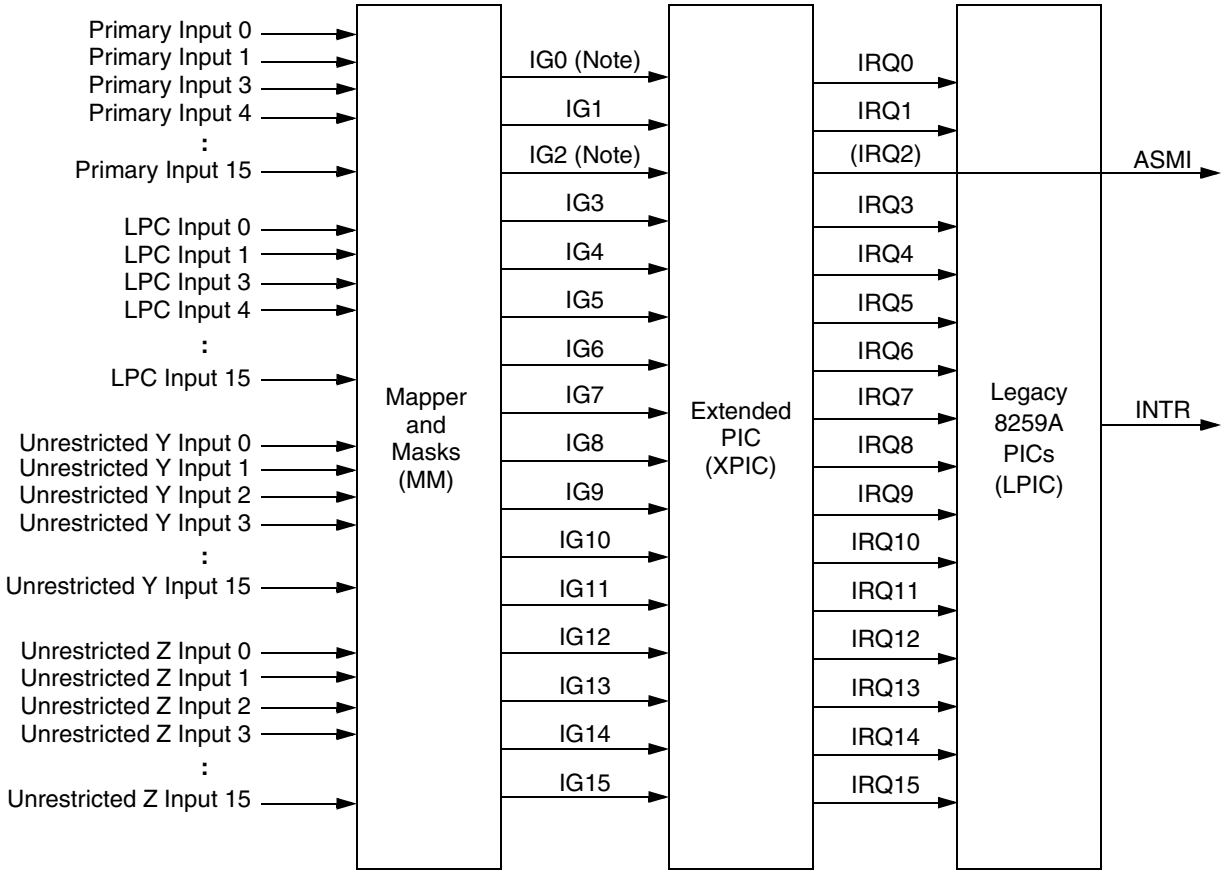

Note: The outputs are organized into 16 groups of four signals each, except IG0 and IG2; they have two signals each.

Figure 5-17. PIC Block Diagram

Downloaded from Arrow.com.

Table 5-12. IRQ Map - Primary and LPC

Input #	Primary Sources	LPC Sources	Legacy IRQ
Input 0	8254 Timer IRQ	LPC IRQ0	8254 Timer
Input 1	KEL IRQ1	LPC IRQ1	Keyboard
N/A	None (Slave Controller)	None	None
Input 3	Reserved - Grounded	LPC IRQ3	UART
Input 4	Reserved - Grounded	LPC IRQ4	UART
Input 5	Reserved - Grounded	LPC IRQ5	Parallel Port 2
Input 6	Reserved - Grounded	LPC IRQ6	Floppy
Input 7	Reserved - Grounded	LPC IRQ7	Parallel Port 1
Input 8	RTC Periodic IRQ	LPC IRQ8	RTC
Input 9	Reserved - Grounded	LPC IRQ9	Undefined
Input 10	Reserved - Grounded	LPC IRQ10	Undefined
Input 11	Reserved - Grounded	LPC IRQ11	Undefined
Input 12	KEL IRQ12	LPC IRQ12	Mouse
Input 13	Float Point Error IRQ	LPC IRQ13	FPU
Input 14	Primary IDE Channel IRQ	LPC IRQ14	Primary IDE
Input 15	Reserved - Grounded	LPC IRQ15	Secondary IDE

Table 5-13. IRQ Map - Unrestricted Sources Y

Unrestricted Y	Source	Comment
Input 0	Software Generated IRQ	
Input 1	Reserved - Grounded	
Input 2	USB IRQ	
Input 3	RTC Alarm	This is a pulse from the RTC. Must use edge triggered interrupt, that is, level interrupt will not work.
Input 4	Audio IRQ	OR of all audio codec interrupts and master interrupts.
Input 5	Power Management SCI	OR of all possible power management System Control Interrupts (SCIs).
Input 6	NAND Flash Ready	Ready to perform NAND write or read.
Input 7	NAND Flash Distraction	NOR access occurred during NAND operation causing a NAND abort or distraction.
Input 8	Reserved, Grounded	
Input 9	Reserved, Grounded	
Input 10	Reserved, Grounded	
Input 11	Reserved, Grounded	
Input 12	SMB Controller IRQ	
Input 13	KEL Emulation IRQ	
Input 14	UART 1 IRQ	
Input 15	UART 2 IRQ	

Downloaded from Arrow.com.

Table 5-14. IRQ Map - Unrestricted Sources Z

Unrestricted Z	Source	Comment
Input 0	MFGPT_Comp_1A	OR of MFGPT_Comp_1 0 and 4.
Input 1	MFGPT_Comp_1B	OR of MFGPT_Comp_1 1 and 5.
Input 2	MFGPT_Comp_1C	OR of MFGPT_Comp_1 2 and 6.
Input 3	MFGPT_Comp_1D	OR of MFGPT_Comp_1 3 and 7.
Input 4	MFGPT_Comp_2A	OR of MFGPT_Comp_2 0 and 4.
Input 5	MFGPT_Comp_2B	OR of MFGPT_Comp_2 1 and 5.
Input 6	MFGPT_Comp_2C	OR of MFGPT_Comp_2 2 and 6.
Input 7	MFGPT_Comp_2D	OR of MFGPT_Comp_2 3 and 7.
Input 8	GPIO Interrupt 0	From GPIO Interrupt/PME Mapper.
Input 9	GPIO Interrupt 1	From GPIO Interrupt/PME Mapper.
Input 10	GPIO Interrupt 2	From GPIO Interrupt/PME Mapper.
Input 11	GPIO Interrupt 3	From GPIO Interrupt/PME Mapper.
Input 12	GPIO Interrupt 4	From GPIO Interrupt/PME Mapper.
Input 13	GPIO Interrupt 5	From GPIO Interrupt/PME Mapper.
Input 14	GPIO Interrupt 6	From GPIO Interrupt/PME Mapper.
Input 15	GPIO Interrupt 7	From GPIO Interrupt/PME Mapper.

5.8.2 Extended PIC (XPIC)

For each of 16 input IGs of four signals each (except IG0 and IG2 with two signals each), XPIC provides a four input “OR”. Thus, 16 outputs are formed. A software readable XPIC Input Request register is available to read the status of the 64 inputs. Outputs [0:1] and [3:15] are connected directly to the corresponding inputs on LPIC. Output 2 can be used as an ASMI.

5.8.3 Legacy PIC (LPIC)

The LPIC consists of two 8259A compatible Programmable Interrupt Controllers (PICs) connected in Cascade mode through interrupt signal two (see Figure 5-18). LPIC contains mechanisms to:

1) Mask any of the 15 inputs via an Interrupt Mask Register (IMR).
2) Determine the input request status via an Interrupt Request Register (IRR).
3) Generate an interrupt request (INTR) to the processor when any of the unmasked requests are asserted.
4) Provide an interrupt vector to the processor as part of an interrupt acknowledge operation based on request priorities.
5) Determine which requests are acknowledged but not yet fully serviced, via an In-Service (ISR) register.

In addition to the above 8259A features, there are two registers to control edge/level mode for each of the interrupt inputs (PIC I/O Address 4D0h and 4D1h) as well as a shadow register to obtain the values of legacy 8259A registers that have not been historically readable (MSR 51400034h).

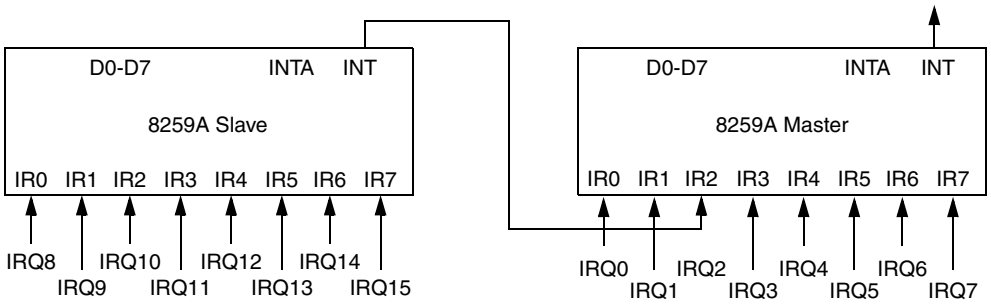

Note: Cascading the 8259A PICs. The INT output of the slave is connected to the IRQ2 input of the master.

Figure 5-18. Cascading 8259As for LPIC

Downloaded from Arrow.com.

As illustrated in Figure 5-19, the blocks that make up the 8259A PIC are:

- Read/Write Logic
- Interrupt Request Register (IRR)
- In-Service Register (ISR)
- Interrupt Mask Register (IMR)
- Priority Resolver
- Control Logic
- Data Bus Buffer
- Cascade Buffer/Comparator

Read/Write Logic

The function of this block is to accept commands from the processor. It contains the four Initialization Command Word registers, PIC_ICW1-PIC_ICW4, and three Operation Command Word registers, PIC_OCW1-PIC_OCW3, that can be programmed to operate in various modes.

IRR, ISR, and IMR

Three registers are available to handle interrupts in the PIC. Each of the three registers is eight bits wide, where every bit corresponds to one of the IR0-IR7 input lines.

Priority Resolver

The priority resolver block manages the hardware requests according to their priority. As several bits may be set in the IRR simultaneously, the priority encoder passes only the highest priority bit; ordered in priority 0 through 7 (0 being the highest).

Control Logic

The INT output goes directly to the CPU interrupt input. When an INT signal is activated, the CPU responds with an Interrupt Acknowledge access that is translated to two pulses on the INTA input of the PIC. At the first INTA pulse, the highest priority IRR bit is loaded into the corresponding ISR bit, and that IRR bit is reset. The second INTA pulse instructs the PIC to present the 8-bit vector of the interrupt handler onto the data bus.

Data Bus Buffer

Control WORDs and status information are transferred through the data bus buffer.

Cascade Buffer/Comparator

This functional block stores and compares the IDs of the PICs.

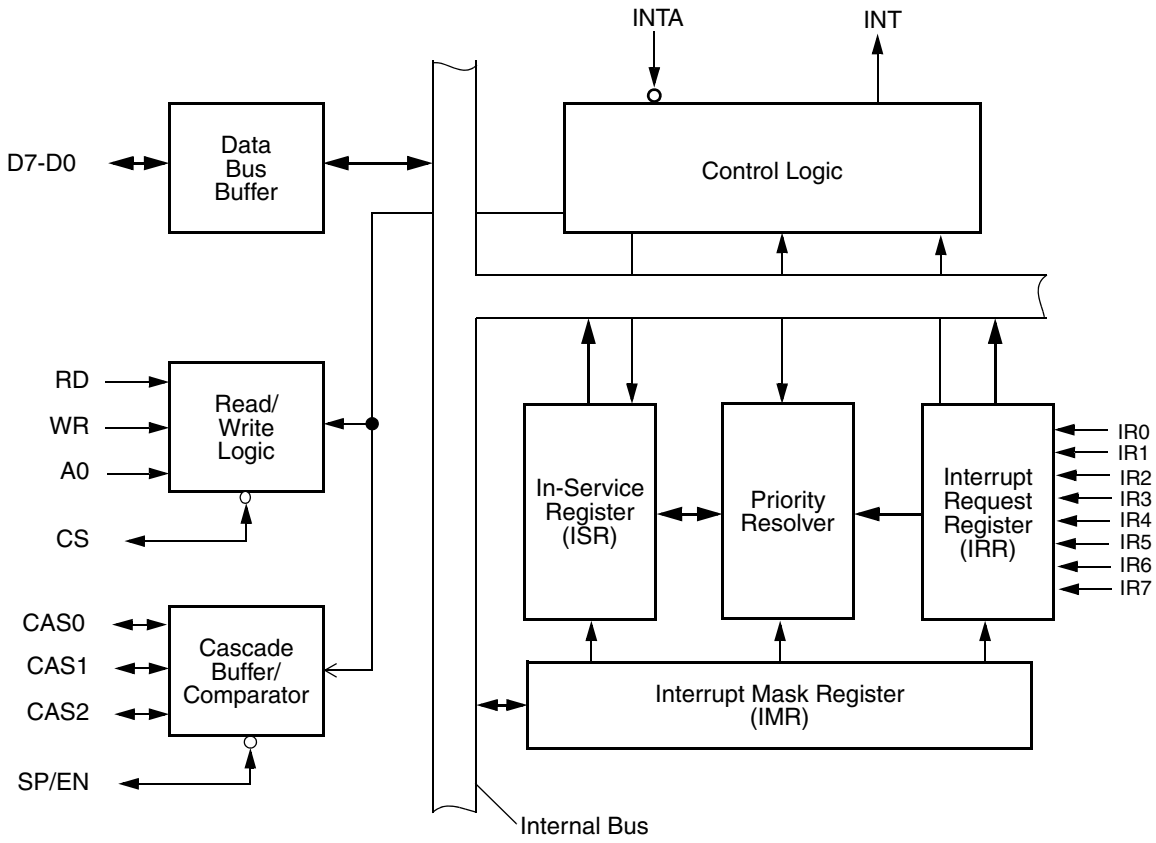

Figure 5-19. PIC 8259A Block Diagram

Downloaded from Arrow.com.

5.8.3.1 Interrupt Sequence

Three registers in the PIC control interrupt requests and eight interrupt lines (IR0-IR7) are connected to the IRR.

The peripheral that requests an interrupt raises the signal at the corresponding IR0-IR7 inputs, which sets the corresponding bit in the IRR. Several peripheral devices can issue interrupt requests at the same time. The PIC gates these requests under the IMR and under the priority of any interrupt service routine already entered (using the ISR), and activates the PIC's output INTR to the processor. The processor acknowledges the INTR, generating two INTA pulses. On the first, the priority encoder transfers (clears) the highest-priority enabled bit in the IRR to the corresponding bit in the ISR (sets). Also, the two PICs use their Cascade connections to decide which one will be selected to respond further. On the second INTA pulse, the selected PIC presents the 8-bit pointer (called as vector data) onto the data bus. The processor reads this pointer as the number of the interrupt handler to call.

Software writes a command (EOI) at the end of the interrupt subroutine, which clears the appropriate ISR bit.

Initialization and Programming

Two types of command words are generated by the processor to program the PIC:

1) **Initialization Command Word (ICW):** The PIC is first initialized by four ICWs (ICW1-ICW4) before any normal operation begins. The sequence is started by writing Initialization Command Word 1 (ICW1). After ICW1 has been written, the controller expects the next writes to follow in the sequence ICW2, ICW3, and ICW4 if it is needed.

2) **Operation Command Word (OCW):** Using these three OCWs (OCW1-OCW3), the PIC is instructed to operate in various interrupt modes. These registers can be written after the initialization above.

ICWs and OCWs must be programmed before operation begins.

Since both the PICs are cascaded, ICW3 of the PIC master should be programmed with the value 04h (PIC I/O Port 021h[7:0]), indicating that the IRQ2 input of the master PIC is connected to the INT output of the slave PIC, rather than the I/O device. This is part of the system initialization code. Also, ICW3 of the slave PIC should be programmed with the value 02h (I/O Port 0A1h[7:0]) as that corresponds to the input on the master PIC.

For accessing the PIC's registers, two ports are available for the master and slave. Table 5-15 lists the addresses and read/write data for these registers.

Table 5-15. 8259A PIC I/O Addresses and I/O Data

I/O Address IRQ0-IRQ7 (Master)	I/O Address IRQ8-IRQ15 (Slave)	Read Data	Write Data
020h	0A0h	IRR ISR	ICW1 OCW2 OCW3
021h	0A1h	IMR	ICW2 ICW3 ICW4 OCW1 (IMR)

5.8.3.2 Interrupt Modes

Fully Nested Mode

The interrupt requests are ordered in priority from 0 through 7.

The highest priority request is processed and its vector data placed on the bus.

The corresponding ISR bit is set until the trailing edge of the last INTA. While the ISR bit is set, all other interrupts of the same or lower priority are inhibited, while higher levels are acknowledged only if the processor internal interrupt enable flip-flop has been re-enabled through software.

End of Interrupt (EOI) Mode

The ISR bit can be reset by a command word that must be issued to the PIC before returning from a service routine.

EOI must be issued twice if in cascade mode, once for the master and once for the slave.

There are two forms of EOI: Specific and Non-Specific.

When a non-specific EOI is issued, the PIC automatically resets the ISR bit corresponding to the highest priority level in service. A non-specific EOI can be issued with OCW2 (EOI = 1, SL = 0, R = 0).

A specific EOI is issued when a mode is used that may disturb the fully nested structure and the PIC might not be able to determine the last interrupt level acknowledged. A specific EOI can be issued with OCW2 (EOI = 1, SL = 1, R = 0, and L0-L2 is the binary level of the ISR bit to be reset).

Automatic End of Interrupt (AEOI) Mode

The PIC automatically performs a non-specific EOI at the trailing edge of the last INTA pulse. This mode is not supported in the CS5536 companion device.

Downloaded from Arrow.com.

Automatic Rotation Mode

In cases where a number of IRQs have equal priority, the device that has been serviced receives the lowest priority. That device, if requesting another interrupt, must wait until the other seven devices have been serviced.

There are two ways to accomplish automatic rotation using OCW2:

- Rotation on the non-specific EOI command (R = 1, SL = 0, EOI = 1).
- Rotation in automatic EOI mode, which is set by (R = 1, SL = 0, EOI = 0) and cleared by (R = 0, SL = 0, EOI = 0).

Specific Rotation Mode

Priorities can be changed by programming the bottom priority, which fixes all other priorities. For example, if IRQ5 is programmed as the bottom priority device, then IRQ6 has the highest priority. The command is issued to OCW2 (R = 1, SL = 1, and L0-L2 is the binary priority level code of the bottom priority device).

Special Mask Mode

In this mode, when a mask bit is set in OCW1, it inhibits further interrupts at that level and enables interrupts from all other levels (lower as well as higher) that are not masked. The special mask mode is set (SSMM = 1, SMM = 1) and cleared (SSMM = 1, SMM = 0) by OCW3.

5.8.4 PIC Operation

From reset, the PIC device comes up in legacy mode. The “Primary” mapper and mask inputs connect directly to LPIC and all other interrupt sources are masked off.

While there are a number of different ways to use the PIC, the discussions that follow assume a mix of level and edge interrupt inputs. The first discussion assumes the operating system schedules the work of the interrupt service after a brief interrupt service routine. The second discussion assumes the operating system performs the work real-time in the interrupt service routine.

Assume the mapper and masks have been established as desired. Level interrupts can be shared, but edge interrupts cannot. This means an XPIC level output can be driven by up to four mapper and mask inputs. Further, this means an XPIC edge output can only be driven by one mapper and mask input.

Assume all edge interrupts generate a low-to-high edge to indicate an interrupt. Assume active low interrupts are inverted outside the PIC device as needed; that is, all MM inputs are active high. An external PCI bus uses active low interrupts that can be shared in an open-collector wired “OR” fashion. This is OK. On-chip, the interrupt sense is inverted. Lastly, note that for the edge interrupts, the edge must remain high until the interrupt acknowledge action.

Assume LPIC is initialized as follows:

```
;Set Initialization Command Words (ICWs)
;All values are in hex
;PIC #1 (Master)
out 20, 11          ; ICW1 - Edge, Master, ICW4 needed
out 21, 8           ; ICW2 - Interrupt vector table offset is 8
out 21, 4           ; ICW3 - Master level 2
out 21, 1           ; ICW4 - Master, 8086 mode
out 21, ff          ; mask all IRQs
;PIC #2 (Slave)
out a0, 11          ; ICW1 - Edge, Slave ICW4 needed
out a1, 70          ; ICW2 - Interrupt vector table offset 70
out a1, 2           ; ICW3 - Slave Level 2
out a1, 1           ; ICW4 - Slave, 8086 mode
out a1, ff          ; mask all IRQs
;Use Operation Control Words (OCWs) during interrupt service
```

Thus, the LPIC 8259As all start in edge mode. This is followed by writes to the individual edge level registers at 4D0h (interrupts 0-7) and 4D1h (interrupts 8-15) to establish level mode for all level inputs. Note that IRQ0 and IRQ2 can not be put in level mode. Writing 0FFh to 4D0h reads back 0FAh.

Scheduled Interrupts Approach

The following set of events is typical. Assume the processor has maskable interrupts enabled:

1) One or more interrupts are generated in the system. These set the associated bits in the LPIC Interrupt Request register.
2) The maskable interrupt signal (INTR) is asserted by the LPIC and interrupts the processor. INTR is an active high level.
3) The processor generates an interrupt acknowledge bus cycle that flows through the GeodeLink™ system as a single BIZZARO packet. When it reaches the Diverse Logic, it is converted to the two cycle interrupt acknowledge sequence expected by the LPIC.
4) The acknowledge operation returns an interrupt vector to the processor that is used to call the appropriate interrupt service routine. Processor interrupts are now disabled at the processor.
5) The acknowledge operation also selects the highest priority interrupt from the IRR and uses it to set one bit in the LPIC ISR. Each acknowledge operation always sets a single ISR bit.

Downloaded from Arrow.com.

6) The acknowledge operation generally de-asserts INTR if there are no higher priority interrupts. However, it is possible that another interrupt is generated in the system anytime after the acknowledge. Any new interrupts will appear in the IRR. If they are higher priority than the current interrupt, then the INTR is re-asserted. Since interrupts are disabled at the processor, INTR remaining high or going high during the interrupt service routine has no effect until interrupts are explicitly enabled again at the processor by the interrupt service routine or implicitly enabled when a return-from-interrupt is executed.

7) The interrupt service routine masks off the interrupt in the LPIC IMR. The interrupt service routine interacts with the operating system to schedule calls to the drivers associated with the interrupt. If level, one or more drivers could be associated. If edge, only one driver could be associated. The service executes a return-from-interrupt.

8) The operating system calls the drivers associated with the interrupt as scheduled. Each driver checks its associated device to determine service needs. If no “need”, the driver returns to the operating system without any action. If “need”, the driver performs the interrupt action, clears the interrupt source, and returns to the operating system. When all the scheduled drivers have been called, the operating system un-masks the interrupt at LPIC. Note that the individual drivers do not directly interact with LPIC.

Note in the above procedure that there is no need to handle level and edge types separately as long as edge types are not shared.

Real-Time Interrupts Approach

The following discussion assumes the work associated with the interrupt is performed in the interrupt service routine. The setup and steps 1 through 6 are the same:

1) If there is only one driver associated with the interrupt, it is called at this point. If more than one driver (shared), then they could be called in order to determine “need”. Alternately, the XPIC Input Request register could be read to directly identify the source.

2) Depending on the event being serviced and the operating system policies, the processor will enable interrupts again at some point. Potentially, this will generate another higher priority interrupt causing the current service routine to nest with another interrupt acknowledge cycle. For a nest operation, an additional bit will be set in the ISR.

3) Eventually, the highest priority service routine is running and INTR is de-asserted. The service calls the driver(s) associated with the interrupt. The driver completes the interrupt “work”, clears the interrupt at its system source, and returns to the interrupt service routine.

4) The interrupt service routine disables interrupts at the processor and prepares to return to a lower priority service routine or the initially interrupted process. It writes an end-of-interrupt (EOI) command (020h) to the PIC_OCW2 register. This clears the highest priority ISR bit. One EOI always clears one ISR bit. The service routine executes a return-from-interrupt that enables interrupts again at the processor.

5) It is possible for INTR to assert from the same interrupt as soon as EOI is written. The initial interrupt acknowledge action copies the bit to the ISR. For edge mode, the initial interrupt acknowledge action also clears the bit in the IRR. For level, the IRR always reflects the level of the signal on the interrupt port. After the interrupt acknowledge for edge mode, another edge could set the bit in the IRR before the EOI. If in level mode, another shared interrupt could be keeping the input high or potentially the initial interrupt has occurred again, since the driver cleared the source but before the EOI. At any rate, if the IRR is high at EOI, INTR will immediately assert again. Hence, the need to disable interrupts at the processor before writing the EOI.

6) Eventually, all system events are serviced and control returns to the originally interrupted program.

Note that the above procedure did not use the IMR, but variations on the above could have. Lastly note, as in the first discussion, drivers do not directly interact with the LPIC.

Downloaded from Arrow.com.

5.9 Direct Memory Access Controller

The Direct Memory Access (DMA) controller supports industry standard DMA architecture using two 8237-compatible DMA controllers in cascaded configuration. Figure 5-20 shows the DMA controller partitioning. It consists of two standard 8237 DMA controllers, a bus interface, address mapper, and source mapper.

Features

- 32-bit address range support via high page registers.
- Supports the standard 7-channel DMA configuration, out of which the four 8-bit channels are used.
- DMA mapper to route DMA sources to the four 8-bit DMA channels.
- DMA sources from the LPC bus, and from transmit and receive buffers from the two on-chip UARTs are supported.
- Allows the data bus to be released in between DMA transfers during demand or bulk mode to allow transfers to the DMA controller or the module doing DMA transfers.

5.9.1 DMA Controllers

The Core Logic supports seven DMA channels using two standard 8237-equivalent controllers. DMA Controller 1 contains Channels 0 through 3 and supports 8-bit I/O adapters. These channels are used to transfer data between 8-bit peripherals and system memory. Using the high and low page address registers, a full 32-bit address is output for each channel so they can all transfer data throughout the entire 4 GB system address space. Each channel can transfer data in 64 KB pages.

DMA Controller 2 is unused.

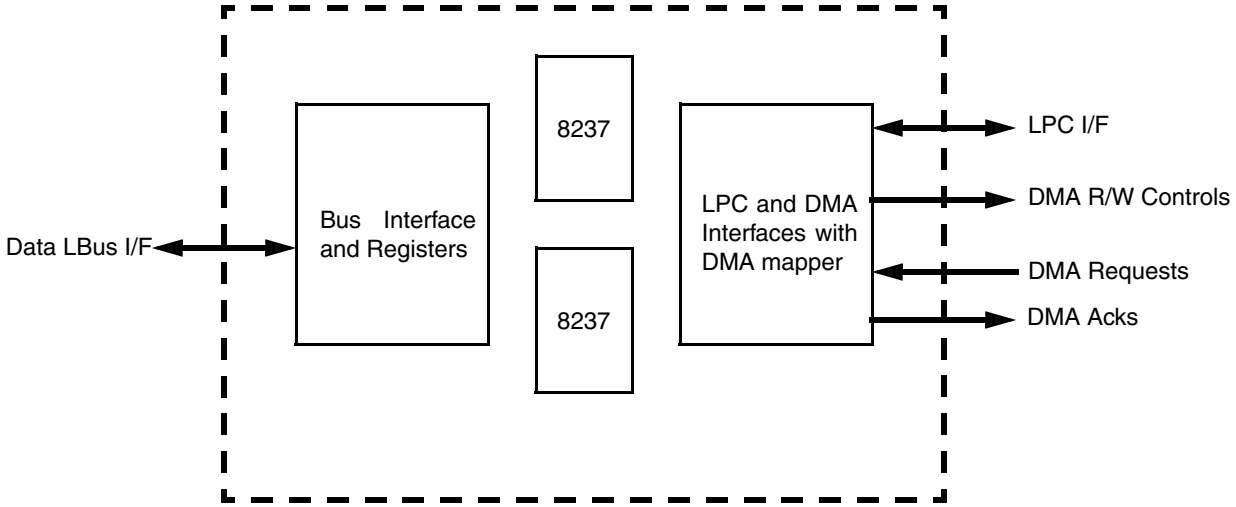

Figure 5-20. DMA Controller Block Diagram

Downloaded from Arrow.com.

5.9.2 DMA Transfer Modes

Each DMA channel can be programmed for single, block, demand, or cascade transfer modes. In the most commonly used mode, single transfer mode, one DMA cycle occurs per DMA Request (DRQ) and the PCI bus is released after every cycle. This allows the Core Logic to timeshare the PCI bus with the AMD Geode LX processor. This is imperative, especially in cases involving large data transfers, because the AMD Geode LX processor gets locked out for too long.

In block transfer mode, the DMA controller executes all of its transfers consecutively without releasing the PCI bus.

In demand transfer mode, DMA transfer cycles continue to occur as long as DRQ is high or terminal count is not reached. In this mode, the DMA controller continues to execute transfer cycles until the I/O device drops DRQ to indicate its inability to continue providing data. For this case, the PCI bus is held by the Core Logic until a break in the transfers occurs.

In the CS5536 companion device design, block and demand transfers behave much like single transfer mode to avoid the lockout problem.

In cascade mode, the channel is connected to another DMA controller or to an ISA bus master, rather than to an I/O device. In the Core Logic, one of the 8237 controllers is designated as the master and the other as the slave. The HOLD output of the slave is tied to the DRQ0 input of the master (Channel 4), and the master's DACK0# output is tied to the slave's HLDA input.

In each of these modes, the DMA controller can be programmed for read, write, or verify transfers.

Both DMA controllers are reset at power-on reset (POR) to fixed priority. Since master Channel 0 is actually connected to the slave DMA controller, the slave's four DMA channels have the highest priority, with Channel 0 as highest and Channel 3 as the lowest. Immediately following slave Channel 3, master Channel 1 (Channel 5) is the next highest, followed by Channels 6 and 7.

5.9.3 DMA Controller Registers

The DMA controller can be programmed with standard I/O cycles to the standard register space for DMA.

When writing to a channel's address or WORD Count register, the data is written into both the base register and the current register simultaneously. When reading a channel address or WORD Count register, only the current address or WORD Count can be read. The base address and base WORD Count are not accessible for reading.

5.9.4 DMA Transfer Types

Each of the seven DMA channels may be programmed to perform one of three types of transfers: read, write, or verify. The transfer type selected defines the method used to transfer a byte or WORD during one DMA bus cycle.

For read transfer types, the DMA controller reads data from memory and writes it to the I/O device associated with the DMA channel.

For write transfer types, the DMA controller reads data from the I/O device associated with the DMA channel and writes to the memory.

The verify transfer type causes the DMA controller to execute DMA transfer bus cycles, including generation of memory addresses, but neither the READ nor WRITE command lines are activated. This transfer type was used by DMA Channel 0 to implement DRAM refresh in the original IBM PC and XT.

5.9.5 DMA Priority

The DMA controller may be programmed for two types of priority schemes: fixed and rotate.

In fixed priority, the channels are fixed in priority order based on the descending values of their numbers. Thus, Channel 0 has the highest priority. In rotate priority, the last channel to get service becomes the lowest-priority channel with the priority of the others rotating accordingly. This prevents a channel from dominating the system.

The address and WORD Count registers for each channel are 16-bit registers. The value on the data bus is written into the upper byte or lower byte, depending on the state of the internal addressing byte pointer. This pointer can be cleared by the Clear Byte Pointer command. After this command, the first read/write to an address or WORD-count register reads or writes to the low byte of the 16-bit register and the byte pointer points to the high byte. The next read/write to an address or WORD-count register reads or writes to the high byte of the 16-bit register and the byte pointer points back to the low byte.

The DMA controller allows the user to program the active level (low or high) of the DRQ and DACK# signals. Since the two controllers are cascaded together internally on the chip, these signals should always be programmed with the DRQ signal active high and the DACK# signal active low.

Downloaded from Arrow.com.

5.9.6 DMA Shadow Registers

The DMA controller contains shadow registers (see Section 6.13 on page 447) for reading the configuration of the DMA controllers.

5.9.7 DMA Addressing Capability

DMA transfers occur over the entire 32-bit address range of the PCI bus. This is accomplished by using the DMA controller's 16-bit memory address registers in conjunction with an 8-bit DMA Low Page register and an 8-bit DMA High Page register. These registers, associated with each channel, provide the 32-bit memory address capability. A write to the Low Page register clears the High Page register, for backward compatibility with the PC/AT standard. The starting address for the DMA transfer must be programmed into the DMA controller registers and the channel's respective Low and High Page registers prior to beginning the DMA transfer.

DMA Page Registers and Extended Addressing

The DMA Page registers provide the upper address bits during DMA cycles. DMA addresses do not increment or decrement across page boundaries. Page boundaries for the 8-bit channels (Channels 0 through 3) are every 64 KB and page boundaries for the 16-bit channels (Channels 5, 6, and 7) are every 128 KB.

Before any DMA operations are performed, the Page registers must be written at the I/O Port addresses in the DMA controller registers to select the correct page for each DMA channel. The other address locations between 080h and 08Fh, and 480h and 48Fh are not used by the DMA channels, but can be read or written by a PCI bus master. These registers are reset to zero at POR. A write to the Low Page register clears the High Page register for backward compatibility with the PC/AT standard.

For most DMA transfers, the High Page register is set to zeros and is driven onto PCI address bits AD[31:24] during DMA cycles. This mode is backward compatible with the PC/AT standard. For DMA extended transfers, the High Page register is programmed, and the values are driven onto the PCI addresses AD[31:24] during DMA cycles to allow access to the full 4 GB PCI address space.

5.9.8 DMA Address Generation

The DMA addresses are formed such that there is an upper address, a middle address, and a lower address portion.

The upper address portion, which selects a specific page, is generated by the Page registers. The Page registers for each channel must be set up by the system before a DMA operation. The DMA Page register values are driven on PCI address bits AD[31:16] for 8-bit channels and AD[31:17] for 16-bit channels.

The middle address portion, which selects a block within the page, is generated by the DMA controller at the beginning of a DMA operation and any time the DMA address increments or decrements through a block boundary. Block sizes are 256 bytes for 8-bit channels (Channels 0 through 3) and 512 bytes for 16-bit channels (Channels 5, 6, and 7). The middle address bits are driven on PCI address bits AD[15:8] for 8-bit channels and AD[16:9] for 16-bit channels.

The lower address portion is generated directly by the DMA controller during DMA operations. The lower address bits are output on PCI address bits AD[7:0] for 8-bit channels and AD[8:1] for 16-bit channels.

5.9.9 DMA Mapper Source Selection

For each 8-bit DMA channel, the DMA mapper allows the DMA request to come from a number of sources. Table 5-16 shows how the DMA mapper register select field selects the appropriate DMA source.

When LPC is selected as the DMA source for DMA Channel 0, the source is LPC DMA Channel 0. Similarly, when LPC is selected as the source for DMA Channel 1, 2, or 3, then the DMA sources for those three DMA channels are respectively LPC DMA Channels 1, 2, and 3. Therefore, LPC DMA Channel 0 can only be mapped to DMA Channel 0, LPC DMA Channel 1 can only be mapped to DMA Channel 1, etc.

Table 5-16. DMA Source Selection

Source Selector Value from DMA Mapper	DMA Source
0	None (DMA channel off)
1	UART1 Transmit
2	UART1 Receive
3	UART2 Transmit
4	UART2 Receive
5	Reserved (not active)
6	Reserved (not active)
7	LPC

Downloaded from Arrow.com.

5.10 Keyboard Emulation Logic

The Keyboard Emulation Logic (KEL) provides a virtual 8042 keyboard controller interface that is used to map non-legacy keyboard and mouse sources to this traditional interface. For example, Universal Serial Bus (USB) sources are “connected” to this interface via System Management Mode (SMM) software. It also allows mixed environments with one LPC legacy device and multiple new (USB) devices. It produces IRQ and ASMI outputs.

Features

- Provides a virtual 8042 keyboard controller interface.
- Allows mixed environments.
- Produces IRQ and ASMI outputs.
- Employs a clock control logic for power management purposes.
- No USB controller required for KEL to operate.

5.10.1 Keyboard Emulation and Port A

The Keyboard Emulation Logic (KEL) with Port A is illustrated in Figure 5-21. Strictly speaking, these are separate functions. However, since they both affect the FA20# (Force processor Address bit 20 to zero when low), the two functions are implemented together. The Keyboard Emulation Logic is the most complex and is discussed first.

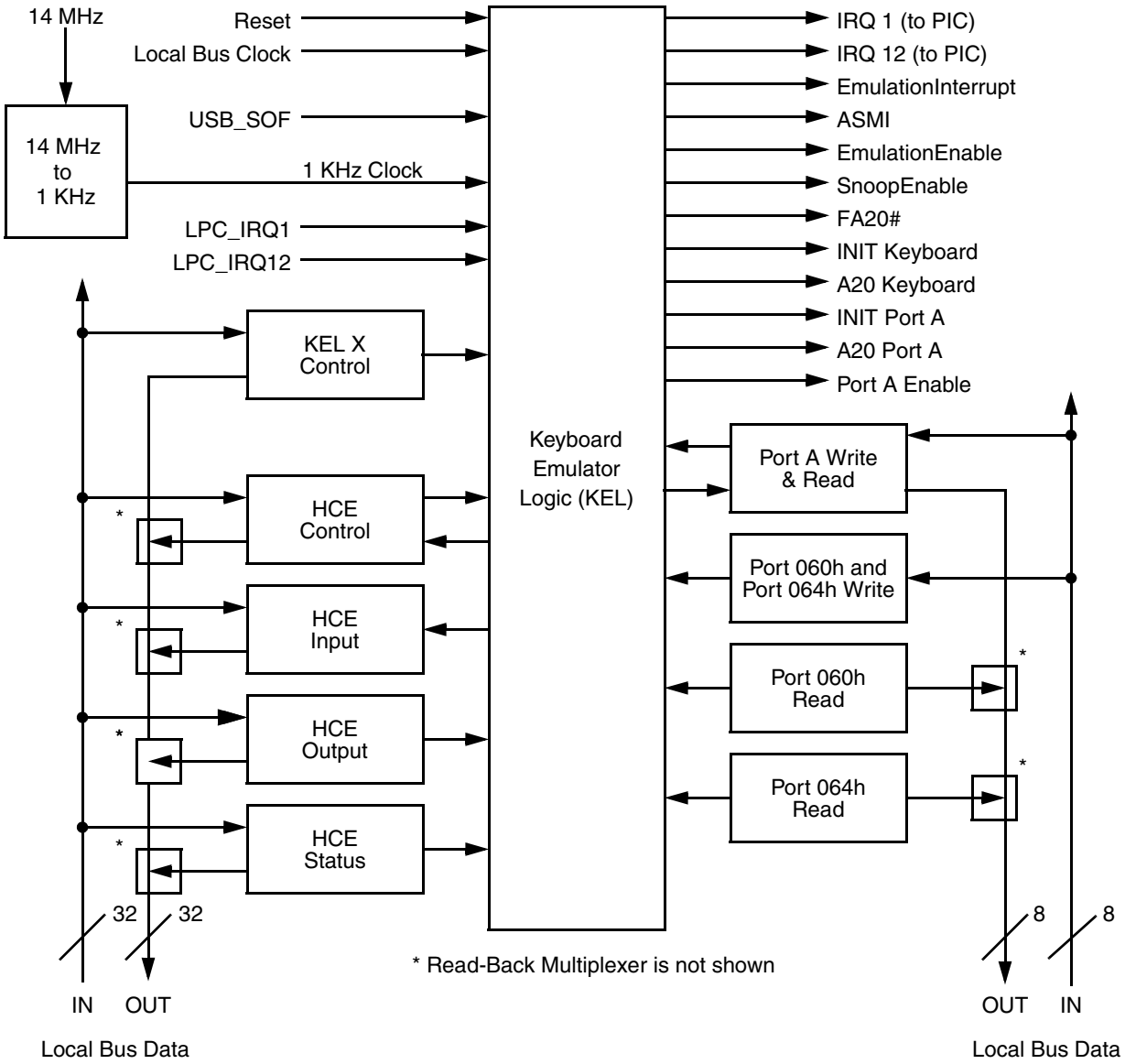

Figure 5-21. KEL Block Diagram

Downloaded from Arrow.com.

5.10.2 Keyboard Emulation Overview

The purpose of the KEL is to model the legacy 8042 keyboard/mouse controller interfaced via legacy I/O Addresses 060h and 064h (also known as Ports 60 and 64). This hardware and supporting processor System Management Mode (SMM) software are designed to support systems that do not have a true PS/2-compatible keyboard and/or mouse interface, but those that have alternative devices performing the equivalent function. Generally, the alternative device is a keyboard or mouse off a USB (Universal Serial Bus) port, but it need not be. Due to the origins of the hardware to be explained shortly, this discussion generally assumes a USB alternative device, but this is not a requirement from a hardware perspective.

The KEL closely models the keyboard emulation hardware detailed in the USB OHCI specification. It is specifically designed to be software compatible with this model. In the USB model, it is part of the USB "Host Controller", but is logically separate from it. The discussion and description that follows is taken from the OHCI specification, but with modifications to reflect the CS5536 companion device specific implementation.

To support applications and drivers in non-USB-aware environments (e.g., DOS), a peripheral subsystem needs to provide some hardware support for the emulation of a PS/2 keyboard and/or mouse by their USB equivalents (alternative devices). For OHCI, this emulation support is provided by a set of registers that are controlled by code running in SMM. Working in conjunction, this hardware and software produces approximately the same behavior-to-application code as would be produced by a PS/2-compatible keyboard and/or mouse interface.

When data is received from the alternative device, the emulation code is notified and becomes responsible for translating the alternative device keyboard/mouse data into a data sequence that is equivalent to what would be produced by a PS/2-compatible keyboard/mouse interface. The translated data is made available to the system through the legacy keyboard interface I/O Addresses 060h and 064h. Likewise, when data/control is to be sent to the alternative device (as indicated by the system writing to the legacy keyboard interface), the emulation code is notified and becomes responsible for translating the information into appropriate data to be sent to the alternative device.

On the PS/2 keyboard/mouse interface, a read of I/O Address 060h returns the current contents of the keyboard output buffer; a read of I/O Address 064h returns the contents of the keyboard status register. An I/O write to I/O Addresses 060h and 064h puts data into the keyboard input buffer (data is being input into the keyboard subsystem). When emulation is enabled, reads and writes of I/O Addresses 060h and 064h are captured in the KEL HCE Output, Status, and/or Input operational registers.

The KEL described here supports a mixed environment in which either the keyboard or mouse is implemented as an alternative device and the other device is attached to a standard PS/2 interface.

The following subsections use the term "alternate device interrupt". This is an ASMI or IRQ as appropriate for the device; for example the USB can generate either an ASMI or IRQ. The KEL generates a separate ASMI or IRQ.

5.10.3 Theory - Keyboard / Mouse Input

When data is received from the alternative device, the emulation code is notified with an alternate device interrupt and translates the keyboard/mouse data into an equivalent PS/2-compatible sequence for presentation to the application software. For each byte of PS/2-compatible data that is to be presented to the applications software, the emulation code writes to KEL_HCE_OUT (KEL Memory Offset 108h). The emulation code then sets the appropriate bits in KEL_HCE_STS (KEL Memory Offset 10Ch) (normally, OutputFull (bit 0) is set for keyboard data and OutputFull plus AuxOutputFull (bit 5) for mouse data). If keyboard/mouse interrupts are enabled, setting the KEL_HCE_STS bits causes the generation of an IRQ1 for keyboard data and IRQ12 for mouse data. The emulation code then exits and waits for the next alternate device interrupt.

When the host CPU exits from SMM, it can service the pending IRQ1/IRQ12. This normally results in a read from I/O Address 060h. When I/O Address 060h is read, the KEL intercepts the access and returns the current contents of KEL_HCE_OUT. The KEL also clears the OutputFull bit in KEL_HCE_STS (KEL Memory Offset 10Ch[0]) and deasserts IRQ1/IRQ12.

If the emulation software has multiple characters to send to the application software, it sets the CharacterPending bit in KEL_HCE_CTRL (KEL Memory Offset 100h[2]). This causes the KEL to generate an ASMI at the beginning of the next frame, a time after the application read from I/O Port 060h (KEL_HCE_OUT).

5.10.4 Theory - Keyboard Output

Keyboard output is indicated by application software writing data to either I/O Address 060h or 064h. Upon a write to either address, the KEL captures the data in KEL_HCE_IN (KEL Memory Offset 104h) and, except in the case of a FA20# (Force processor Address bit 20 to zero when low) sequence, updates the InputFull and CmdData bits (KEL Memory Offset 10Ch[1,3]). When the InputFull bit is set, a KEL ASMI is generated at the beginning of the next frame. Upon receipt of the KEL ASMI, the emulation software reads KEL_HCE_CTRL and KEL_HCE_STS to determine the cause of the emulation interrupt and performs the operation indicated by the data. Generally, this means putting out data to the alternate device.

5.10.5 Emulation Events

Emulation Events (EEs) are caused by reads and writes of the emulation registers. EEs generated by the emulation hardware are steered by the KEL to either an ASMI or an Emulation Interrupt. Steering is determined by the Emulation Event Routing bit (MSR 5140001Fh[1]).

Downloaded from Arrow.com.

Historically, EEs for data coming from the keyboard/mouse are generated on USB frame boundaries. The KEL is independent of the USB logic, but uses USB frame boundaries for backward compatibility. Alternately, an independent 1 ms counter can be used (MSR 5140001Fh[3:2]). At the beginning of each frame, the conditions that define asynchronous EEs are checked and, if an EE condition exists, the EE is signaled to the host. This has the effect of reducing the number of EEs that are generated for legacy input to no more than 1,000 per second. The number of emulation interrupts is limited because the maximum rate of data delivery to an application cannot be more than 1,000 bytes per second. A benefit of this rule is that, for normal keyboard and mouse operations, only one EE is required for each data byte sent to the application. Additionally, delay of the EE until the next Start Of Frame (SOF) causes data persistence for keyboard input data that is equivalent to that provided by an 8042 device.

5.10.6 Theory - KEL EEs

There are three EEs that produce the signal KEL ASMI. These three EEs are: Character Pending, Input Full, and External IRQ. An A20 sequence is a possible Input Full EE. The A20Sequence bit (KEL Memory Offset 100h[5]) is set in this case. The signal KEL ASMI is an active high pulse, one Local bus clock in width, and sent to the Diverse Integration Logic (DIVIL). This signal is only asserted when the EmulationEnable bit is enabled (KEL Memory Offset 100h[0] = 1). For an EE, KEL also optionally produces an Emulation IRQ (KEL_EMU_IRQ). This signal is a level and is only asserted when the EER bit (MSR 5140001Fh[1]) is low. De-asserting KEL_EMU_IRQ requires clearing the appropriate bit in KEL_HCE_CTRL or KEL_HCE_STS (KEL Memory Offset 100h and 10Ch).

For the keyboard A20Sequence, KEL sets the KEL_A20_ASMI_FLAG if enabled in the DIVIL.

Keyboard INIT and A20 are generated as appropriate when emulation is enabled or SNOOP is enabled in KELX_CTL (MSR 5140001Fh[0]). KEL ASMI is generated as appropriate when emulation is enabled. KEL ASMI is not generated when emulation is disabled and snoop is enabled. Keyboard A20 under snoop does not require service beyond the DIVIL GLD_MSR_SMI (MSR 51400002h); that is, KEL does not need to be manipulated. The InputFull bit (KEL Memory Offset 10Ch[1]) will set, but does not require service. Each new keyboard A20Sequence will set the KEL_INIT_ASMI_FLAG if enabled.

If a write to Port A changes the value of bit 1, the KEL sets the PORTA_A20_ASMI_FLAG (DIVIL MSR 51400002h[38]) if enabled in the DIVIL. If bit 0 of Port A is written to a 1, KEL sets the PORTA_INIT_ASMI_FLAG (DIVIL MSR 51400002h[39]) if enabled in the DIVIL. It also sets Port A to the value 2; that is, only bit 1 is high. The A20State bit in KEL_HCE_CTRL (KEL Memory Offset 100h[8]) is not effected.

The rate of application software reading of I/O Address 060h is dependent on the alternate device interrupt rate or SOFEVENT (MSR 5140001Fh[3:2]) when the CharacterPending bit is used (KEL Memory Offset 100h[2]). There is one KEL EE per application software read of I/O Address 060h when the CharacterPending is set.

The rate of application software writing of I/O Addresses 060h and 064h is no greater than SOFEVENT. Generally, there is one KEL EE per application write to I/O Address 060h.

SOFEVENT is used to emulate normal delays associated with a real 8042 controller and PS/2 device. Its source is established via MSR 5140001Fh[3:2]. Its value is 1 ms frame interval.

5.10.7 Theory - Mixed Environment

A mixed environment is one in which an alternate device and a PS/2 device are supported simultaneously (e.g., a USB keyboard and a PS/2 mouse). The mixed environment is supported by allowing the emulation software to control the PS/2 interface. Control of this interface includes capturing I/O accesses to I/O Addresses 060h and 064h and also includes capture of interrupts from the PS/2 keyboard controller off the LPC. IRQ1 and IRQ12 from the LPC keyboard controller are routed through the KEL. When ExternalIRQEn (KEL Memory Offset 100h[4]) is set, IRQ1 and IRQ12 from the legacy keyboard controller are blocked at the KEL and an ASMI is generated instead. This allows the emulation software to capture data coming from the legacy controller and presents it to the application through the emulated interface. The behavior of IRQ1 and IRQ12 with respect to the ExternalIRQEn and IRQEn bits is summarized in Table 5-17.

Table 5-17. KEL Mixed Environment

Emulation Enable	External IRQEn	IRQEn	LPC_IRQ1	LPC_ IRQ12	Output Full	Output FullAux	IRQ1 Active	IRQ12 Active	Action
1	0	1	0	0	1	0	0	0	IRQ1
1	0	1	0	0	0	1	0	0	IRQ12
x	1	0	0	1	0	0	0	1	EE
x	1	0	1	0	0	0	1	0	EE

Downloaded from Arrow.com.

5.10.8 Theory - Force A20 Low Sequence

The FA20 sequence occurs frequently in DOS applications. Mostly, the sequence is to set FA20 high; that is, do not force address bit 20 to a 0. High is the default state of this signal. To reduce the number of ASMIs caused by the A20 sequence, KEL generates an ASMI only if the GateA20 sequence would change the state of A20.

The A20 sequence is initiated with a write of D1h to I/O Address 064h. On detecting this write, the KEL sets the A20Sequence bit (KEL Memory Offset 100h[5]). It captures the data byte (KEL Memory Offset 104h[7:0]), but does not set the InputFull bit (KEL Memory Offset 10Ch[1]). When the A20Sequence is set, a write of a value to I/O Address 060h, that has bit 1 set to a value different than A20State (KEL Memory Offset 100h[8]), causes InputFull to be set and causes an ASMI. An ASMI with both InputFull and A20Sequence set, indicates that the application is trying to change the setting of FA20 on the keyboard controller. However, when A20Sequence is set, and a write of a value to I/O Address 060h that has bit 1 set to the same value as A20State is detected, then no ASMI will occur.

As mentioned above, a write to I/O Address 064h of any value other than D1h causes A20Sequence to be cleared. If A20Sequence is active and a value of FFh is written to I/O Address 064h, A20Sequence is cleared but InputFull is not set. A write of any value other than D1h or FFh causes InputFull to be set, which then causes an ASMI. A write of FFh to I/O Address 064h when A20Sequence is not set causes InputFull to be set. The current value of the A20_Mask is maintained in two unconnected places: the A20State bit (KEL Memory Offset 100h[8]) in Port A and the value of A20State is only changed via a software write to KEL_HCE_CTRL. It is set to 0 at reset. The value of bit 1 in Port A changes on any write to Port A. From reset, PortA[1] is 1.

5.10.9 Theory - Processor Initialize Sequence

The processor initialization sequence is possible if either of the following cases is true:

- A write of a value fed to I/O Address 064h indicates processor initialization (INIT) or warm reset. This sets KEL_INIT_ASMI_FLAG if enabled in the DIVIL. All HCE registers and Port A are not effected.
- Port A initialization, INIT will respond to: Write 01h to I/O Address 092h. (Refer to Section 5.10.10 "Port A".)

5.10.10 Port A

This register is at I/O Address 092h. It can also be used to change the state of A20 or to cause an INIT. When 8-bit data that has its bit 0 set to 1 is written, it causes an INIT. However, if bit 1 of the 8-bit data is set to 1, it causes a change in the state of A20 (A20 gets asserted). As above, an ASMI is only generated on an INIT or A20 event. The INIT operation always forces A20 high. Writes to bits 2 and higher are a “don’t care”. Reads to Port A always return 00h or 02h depending on the state of Port A[1].

Note that A20 can be changed with Port A or the GateA20 sequence. Another important point is that A20State (bit 8) in KEL_HCE_CTRL and bit 1 in Port A are independent from each other. Writing a 1 to Port A[1] does not effect the A20State bit. Changing the state of the A20State bit does not effect Port A[1].

Note that when A20 has a value of 0, it means that the second MB wraps to the first MB. However, a value of 1 means that A20 is not modified.

The following statements summarize the above INIT and A20 sequences :

INIT responds to: Write 01h to I/O Address 092h or FEh to I/O Address 064h.

A20 toggle responds to: Write 02h to Address 092h or Write 00h to Address 092h (bit 1 toggles, bit 0 held at 0), and Write D1h to I/O Address 064h then write a value to I/O Address 060h that has bit 1 set to a value different than the A20State in the KEL_HCE_CTRL register. Trapping will insure the SMI is taken on the instruction boundary.

A keyboard INIT does not respond to: Write D1h to I/O Address 064h followed by a write 02h to I/O Address 060h (set bit 0 to 0).

5.10.11 Keyboard Emulation Logic MSRs

In addition to KEL_HCE_CTRL (KEL Memory Offset 100h), there is a KEL Extended Control MSR, KELX_CTL (MSR 5140001Fh), to provide additional features.

A “snoop” feature is used when an external LPC based keyboard controller is used (while the KEL is not enabled). All I/O accesses to I/O Addresses 060h and 064h proceed to the LPC, but the KEL snoops or watches for the A20 and INIT sequences. If these occur, KEL sets the KEL_A20_ASMI_FLAG or KEL_INIT_ASMI_FLAG in the DIVIL if enabled.

EEs may be routed such that they generate an IRQ or ASMI. In the case of Emulation IRQ, the clearing is done by an operation on the appropriate KEL_HCE_CTRL or KEL_HCE_STS registers. Reading the EE routing bit is not required for emulation processing via IRQ. This bit does not effect ASMIs associated with A20 and INIT operations. All ASMI signals are a single clock pulse wide.

SOFEVENT (Start Of Frame Event) is established with MSR 5140001Fh[3:2]. These bits provide alternative sources for SOFEVENT. The SOFEVENT can be sourced from USB1, USB2, or the PIT. A 00 value selects the test mode.

The Port A enable bit is a mask bit for Port A and its default state is high.

Downloaded from Arrow.com.

5.10.12 Related Diverse Device Functions

FA20# and INIT are not passed directly to the processor. SSM code manipulates equivalent functions in the processor.

The HCE registers are considered part of the USB operational register set for some software, and hence, share the same memory mapped register space. The GLIU descriptor for the USBs, MSR_LBAR_KEL1, and MSR_LBAR_KEL2 must all be set to the same base. The GLIU routes accesses at Memory Offset 100h and above to the Diverse Device and accesses below 100h to the USB.

The address decoder in the DIVIL routes accesses to I/O Addresses 060h and 064h to the KEL or LPC based on the value of EmulationEnable (KEL Memory Offset 100h[0]). If snoop mode is enabled and the EmulationEnable bit is not set, writes are made directly to both the KEL and LPC.

The LPC IRQ1 and IRQ12 outputs are connected to both KEL and the PIC. Masking logic in the PIC allows the LPC interrupts to be used directly or the KEL set can be used.

The KEL ASMI is routed through the Diverse Device's Standard GLD_MSR_SMI register (MSR 51400002h). It may be masked off there, but it is only cleared via KELX_CTL (MSR 5140001Fh).

5.10.13 Emulation Event Decode

Emulation Events are of two types: frame synchronous and asynchronous. The conditions for a frame synchronous interrupt are sampled by the KEL at each SOF interval and, if an event condition exists, it is signaled at that time. For asynchronous events, the event is signaled as soon as the condition exists.

The equation for the synchronous Emulation Event condition is:

synchronousEvent =
HCE_Control.EmulationEnable
(KEL Memory Offset 100h[0])
and
HCE_Control.CharacterPending
(KEL Memory Offset 100h[2])
and not
HCE_Status.OutputFull
(KEL Memory Offset 10Ch[0]).

When this decode is true, an Emulation Event is generated at the next SOF. The Event condition is latched until the decode becomes false.

The equation for the asynchronous Emulation Event condition is:

asynchronousEvent =
HCE_Control.EmulationEnable
(KEL Memory Offset 100h[0])
and
HCE_Status.InputFull
(KEL Memory Offset 10Ch[1]),
or
HCE_Control.ExternIIRQEn
(KEL Memory Offset 100h[4])
and
HCE_Control.IRQ1Active
(KEL Memory Offset 100h[6])
or
HCE_Control.IRQ12Active
(KEL Memory Offset 100h[7]).

Downloaded from Arrow.com.

5.11 System Management Bus Controller

The System Management Bus (SMB) Controller is a two-wire synchronous serial interface, compatible with the System Management Bus physical layer. The SMB Controller is also compatible with Intel's SMBus, and other industry standard two-wire interfaces. The SMB Controller can be configured as a bus master or slave, and can maintain bidirectional communication with both multiple master and slave devices. As a slave device, the SMB Controller may issue a request to become the bus master.

The SMB Controller allows easy interfacing to a wide range of low-cost memory and I/O devices, including: EEPROMs, SRAMs, timers, ADC, DAC, clock chips, and peripheral drivers.

This chapter describes the general SMB Controller functional block. A device may include a different implementation.

A block diagram of the System Management Bus (SMB) Controller is shown Figure 5-22.

The SMB Controller is upward compatible with previous industry standard two-wire interfaces as detailed in Table 5-18 on page 126.

The SMB Controller's protocol uses a two-wire interface for bidirectional communication between the ICs connected to the bus. The two interface lines are the Serial Data Line (SDA) and the Serial Clock Line (SCL). These lines should be connected to a positive supply via an internal or external pull-up resistor, and remain high even when the bus is idle.

Each IC has a unique address and can operate as a transmitter or a receiver (though some peripherals are only receivers).

During data transactions, the master device initiates the transaction, generates the clock signal, and terminates the transaction. For example, when the SMB Controller initiates a data transaction with an attached SMB compliant peripheral, the SMB Controller becomes the master. When the peripheral responds and transmits data to the SMB Controller, their master/slave (data transaction initiator and clock generator) relationship is unchanged, even though their transmitter/receiver functions are reversed.

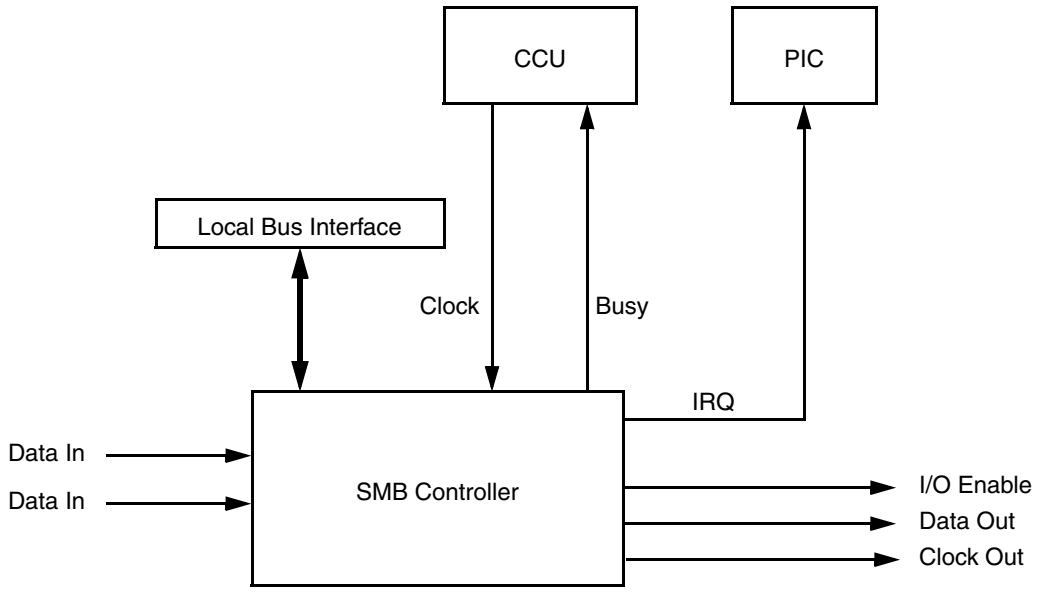

Figure 5-22. SMB Controller Block Diagram

Downloaded from Arrow.com.

Table 5-18. Comparison of SMB, Industry Standard Two-wire Interface, and ACCESS.bus

Symbol	Parameter	SMB		Industry Standard Two-wire Interface		ACCESS.bus	
		Min	Max	Min	Max	Min	Max
F	Operating frequency	10 KHz	100 KHz	0 KHz	100 KHz	10 KHz	100 KHz
T_{BUF}	Bus free time between STOP and START condition	4.7 µs		4.7 µs		4.7 µs	
T_{HD}:STA	Hold time after (repeated) START condition. After this period the first clock is generated	4.0 µs		4.0 µs		4.0 µs	
T_{SU}:STA	Repeated START condition setup time	4.7 µs		4.7 µs		4.7 µs	
T_{SU}:STO	STOP condition setup time	4.0 µs		4.0 µs		4.0 µs	
T_{HD}:DAT	Data hold time	300 ns		0 µs	3.45 µs	300 ns	
T_{SU}:DAT	Data setup time	250 ns		250 ns		250 ns	
$T_{Timeout}$	Detect clock low time-out	25 ms	35 ms			25 ms	35 ms
T_{LOW}	Clock low period	4.7 µs		4.7 µs		4.7 µs	
T_{HIGH}	Clock high period	4.0 µs	50 µs	4.0 µs		4.0 µs	50 µs
T_{LOW}:SEXT	Cumulative clock low extend period (slave)		25 ms				25 ms
T_{LOW}:MEXT	Cumulative clock low extend period (master)		10 ms				10 ms
T_F	Clock/data fall time		300 ns		300 ns		300 ns
T_R	Clock/data rise time		1000 ns		1000 ns		1000 ns
TPOR	Time that device must be operational after power-on reset		500 ms				
V_{IL}	SMBus signal input low voltage		0.8V	-0.5V	1.5V	-0.5V	0.6V
V_{IH}	SMBus signal input high voltage	2.1V	VDD	3.0V		1.4V	5.5V
V_{OL}	SMBus signal output low voltage		0.4V	0V	0.4V	0V	0.4V
I_{LEAK_BUS}	Input leakage per bus segment	-200 µA	±200 µA				
I_{LEAK_PIN}	Input leakage per device pin	-10 µA	±10 µA	-10 µA	+10 µA		10 µA
V_{DD}	Nominal bus voltage	2.7V	5.5V			2.0V	5.0V
I_{PULLUP}	Current sinking, V_{OL} = 0.4V (SMBus)	4.0 mA				100 µA	350 µA
C_{BUS}	Capacitive load per bus segment		400 pF				
C_I	Capacitance for SMBDAT or SMBCLK pin		10 pF		10 pF		
V_{NOISE}	Signal noise immunity from 10 to 100 MHz	300 mV p-p					

Downloaded from Arrow.com.

5.11.1 Data Transactions

One data bit is transferred during each clock pulse. Data is sampled during the high state of the serial clock (SCL). Consequently, throughout the clock's high period, the data should remain stable (see Figure 5-23). Any changes on the SDA line during the high state of SCL and in the middle of a transaction aborts the current transaction. New data should be sent during the low SCL state. This protocol permits a single data line to transfer both command/control information and data, using the synchronous serial clock.

Each data transaction is composed of a START condition, a number of byte transfers (set by the software), and a STOP condition to terminate the transaction. Each byte is transferred with the most significant bit first, and after each byte (8 bits), an Acknowledge signal must follow. The following subsections provide further details of this process.

During each clock cycle, the slave can stall the master while it handles the previous data or prepares new data. This can be done for each bit transferred, or on a byte boundary, by the slave holding SCL low to extend the clock-low period. Typically, slaves extend the first clock cycle of a transfer if a byte read has not yet been stored, or if the next byte to be transmitted is not yet ready. Some microcontrollers, with limited hardware support for SMB, extend the SMB after each bit, thus allowing the software to handle this bit.

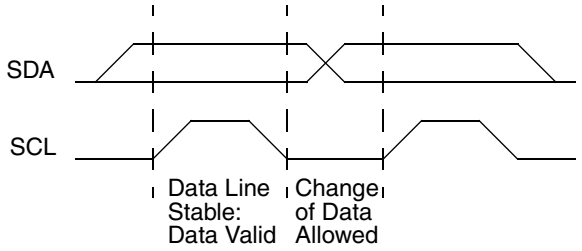

Figure 5-23. SMB Bit Transfer

5.11.1.1 START and STOP Conditions

The SMB master generates START and STOP conditions (control codes). After a START condition is generated, the bus is considered busy and retains this status for a certain time after a STOP condition is generated. A high-to-low transition of the data line while the clock is high indicates a START condition. A low-to-high transition of the data line while the clock is high indicates a STOP condition (see Figure 5-24).

In addition to the first START condition, a repeated START condition can be generated in the middle of a transaction. This allows another device to arbitrate the bus, or a change in the direction of data transfer.

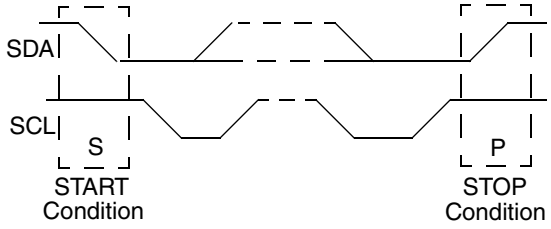

Figure 5-24. SMB START and STOP Conditions

Downloaded from Arrow.com.

5.11.1.2 Acknowledge (ACK) Cycle

The ACK cycle consists of two signals: the ACK clock pulse sent by the master with each byte transferred, and the ACK signal sent by the receiving device (see Figure 5-25).

The master generates the ACK clock pulse on the ninth clock pulse of the byte transfer. The transmitter releases the data line (permits it to go high) to allow the receiver to send the ACK signal. The receiver must pull down the data line during the ACK clock pulse, signalling that it has correctly received the last data byte and is ready to receive the next byte. Figure 5-26 illustrates the ACK cycle.

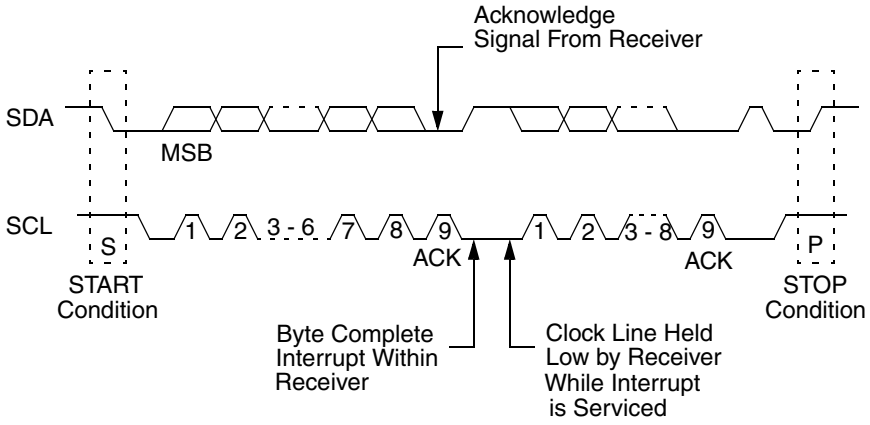

Figure 5-25. SMB Data Transaction

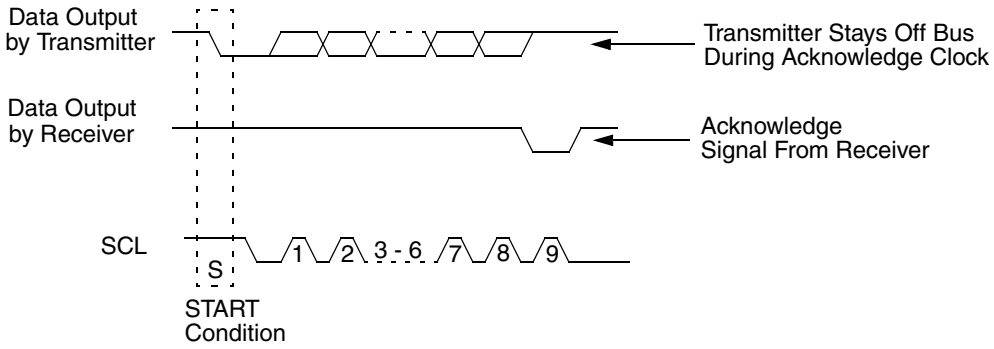

Figure 5-26. SMB Acknowledge Cycle

Downloaded from Arrow.com.

5.11.1.3 Acknowledge After Every Byte Rule

According to this rule, the master generates an acknowledge clock pulse after each byte transfer, and the receiver sends an acknowledge signal after every byte received. There are two exceptions to this rule:

- When the master is the receiver, it must indicate to the transmitter the end of data by not acknowledging (negative acknowledge) the last byte clocked out of the slave. This negative acknowledge still includes the acknowledge clock pulse (generated by the master), but the SDA line is not pulled down.
- When the receiver is full, otherwise occupied, or a problem has occurred, it sends a negative acknowledge to indicate that it cannot accept additional data bytes.

5.11.1.4 Addressing Transfer Formats

Each device on the bus has a unique address. Before any data is transmitted, the master transmits the address of the slave being addressed. The slave device should send an acknowledge signal on the SDA, once it recognizes its address.

The address consists of the first seven bits after a START condition. The direction of the data transfer (R/$\overline{W}$) depends on the bit sent after the address, the eighth bit. A low-to-high transition during an SCL high period indicates the STOP condition, and ends the transaction of SDA (see Figure 5-27).

When the address is sent, each device in the system compares this address with its own. If there is a match, the device considers itself addressed and sends an acknowledge signal. Depending on the state of the R/$\overline{W}$ bit (1 = Read, 0 = Write), the device acts either as a transmitter or a receiver.

The SMB protocol allows a general call address to be sent to all slaves connected to the bus. The first byte sent specifies the general call address (00h) and the second byte specifies the meaning of the general call (for example, write slave address by software only). Those slaves that require data acknowledge the call, and become slave receivers; other slaves ignore the call.

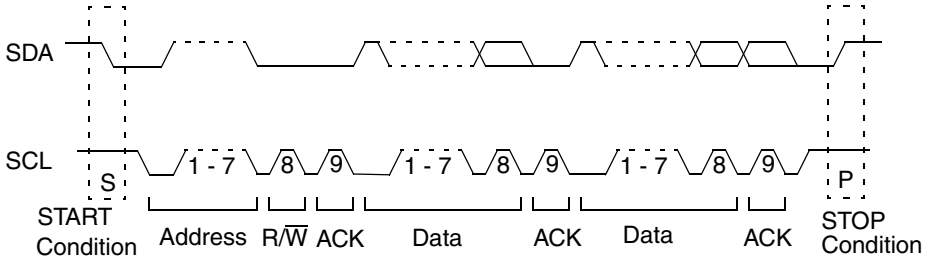

Figure 5-27. SMB Complete Data Transaction

Downloaded from Arrow.com.

5.11.1.5 Arbitration on the Bus

Multiple master devices on the bus require arbitration between their conflicting bus SMB demands. Control of the bus is initially determined according to address bits and clock cycle. If the masters are trying to address the same slave, data comparisons determine the outcome of this arbitration. In master mode, the device immediately aborts a transaction if the value sampled on the SDA line differs from the value driven by the device. (An exception to this rule is SDA while receiving data. The lines may be driven low by the slave without causing an abort.)

The SCL signal is monitored for clock synchronization and to allow the slave to stall the bus. The actual clock period is set by the master with the longest clock period, or by the slave stall period. The clock high period is determined by the master with the shortest clock high period.

When an abort occurs during the address transmission, a master that identifies the conflict should give up the bus, switch to slave mode, and continue to sample SDA to check if it is being addressed by the winning master on the bus.

5.11.1.6 Master Mode

This discussion and Section 5.11.1.7 on page 132 reference several bits in the SMB Native register set (e.g., SMB I/O Offset 03h[7], SMB I/O Offset 01h[1], etc.). Table 5-19 provides the bit map for the SMB Native registers for the reader's convenience. For full bit descriptions, refer to Section 6.10.1 "SMB Native Registers" on page 395.

Requesting Bus Mastership

An SMB transaction starts with a master device requesting bus mastership. It asserts a START condition, followed by the address of the device that wants the bus. If this transaction is successfully completed, the software may assume that the device has become the bus master.

For the device to become the bus master, the software should perform the following steps:

1) Configure SMB I/O Offset 03h[2] to the desired operation mode (Polling = 0 or Interrupt = 1) and set SMB I/O Offset 03h[0]. This causes the SMB Controller to issue a START condition on the bus when the bus becomes free (SMB I/O Offset 02h[1] is cleared, or other conditions that can delay START). It then stalls the bus by holding SCL low.
2) If a bus conflict is detected (i.e., another device pulls down the SCL signal), SMB I/O Offset 01h[5] is set.
3) If there is no bus conflict, SMB I/O Offset 01h[6] and SMB I/O Offset 01h[1] are set.
4) If SMB I/O Offset 03h[2] is set and either SMB I/O Offset 01h[5] or SMB I/O Offset 01h[6] is set, an interrupt is issued.

Sending the Address Byte

When the device is the active master of the bus (SMB I/O Offset 01h[1] is set), it can send the address on the bus.

The address sent should not be the device's own address, as defined by the ADDR bits of the SMB_ADDR register if the SMB I/O Offset 04h[7] is set, nor should it be the global call address if the SMB I/O Offset 02h[3] is set.

To send the address byte, use the following sequence:

1) For a receive transaction, where the software wants only one byte of data, it should set SMB I/O Offset 03h[4]. If only an address needs to be sent or if the device requires STALL for some other reason, set the SMB I/O Offset 03h[7].
2) Write the address byte (7-bit target device address) and the direction bit to SMB_SDA (SMB I/O Offset 00h). This causes the SMB Controller to generate a transaction. At the end of this transaction, the acknowledge bit received is copied to SMB I/O Offset 01h[4]. During the transaction, the SDA and SCL lines are continuously checked for conflict with other devices. If a conflict is detected, the transaction is aborted, SMB I/O Offset 01h[5] is set, and SMB I/O Offset 01h[1] is cleared.

Table 5-19. SMB Native Registers Map

SMB I/O Offset	Name	7	6	5	4	3	2	1	0
00h	SMB_STA	SMBSDA							
01h	SMB_STS	SLVSTP	SDAST	BER	NEGACK	STASTR	NMATCH	MASTER	XMIT
02h	SMB_CTRL_STS	RSVD		TGSCL	TSDA	GCMTCH	MATCH	BB	BUSY
03h	SMB_CTRL1	STASTRE	NMINTE	GCMEN	ACK	RSVD	INTEN	STOP	START
04h	SMB_ADDR	SAEN	SMBADDR						
05h	SMB_CTRL2	SCLFRQ[6:0]							EN
06h	SMB_CTRL3	SCLFRQ[14:7]							

Downloaded from Arrow.com.

3) If SMB I/O Offset 03h[7] is set and the transaction was successfully completed (i.e., both SMB I/O Offset 01h[5] and SMB I/O Offset 01h[4] are cleared), the STASTR (SMB I/O Offset 01h[3]) bit is set. In this case, the SMB Controller stalls any further bus operations (i.e., holds SCL low). If SMB I/O Offset 03h[2] is set, it also sends an interrupt request to the host.

4) If the requested direction is transmit and the START transaction was completed successfully (i.e., neither SMB I/O Offset 01h[4] nor SMB I/O Offset 01h[5] is set, and no other master has arbitrated the bus), SMB I/O Offset 01h[6] is set to indicate that the SMB Controller awaits attention.

5) If the requested direction is receive, the START transaction was completed successfully and SMB I/O Offset 01h[3] is cleared, the SMB Controller starts receiving the first byte automatically.

6) Check that both SMB I/O Offset 01h[5] and SMB I/O Offset 03h[7] are cleared. If set and SMB I/O Offset 03h[2] is set, an interrupt is generated.

Master Transmit

After becoming the bus master, the device can start transmitting data on the bus.

To transmit a byte in an interrupt or polling controlled operation, the software should:

1) Check that both SMB I/O Offset 01h[5] and SMB I/O Offset 01h[4] are cleared, and that SMB I/O Offset 01h[6] is set. If SMB I/O Offset 03h[7] is set, also check that the SMB I/O Offset 01h[3] is cleared (and clear it if required).

2) Write the data byte to be transmitted to SMB_SDA.

When either SMB I/O Offset 01h[4] or SMB I/O Offset 01h[5] is set, an interrupt is generated. When the slave responds with a negative acknowledge, SMB I/O Offset 01h[4] is set and SMB I/O Offset 01h[6] remains cleared. In this case, if SMB I/O Offset 03h[2] is set, an interrupt is issued.

Master Receive

After becoming the bus master, the device can start receiving data on the bus.

To receive a byte in an interrupt or polling operation, the software should:

1) Check that SMB I/O Offset 01h[6] is set and that SMB I/O Offset 01h[5] is cleared. If SMB I/O Offset 03h[7] is set, also check that SMB I/O Offset 01h[3] is cleared (and clear it if required).

2) Set SMB I/O Offset 03h[4] if the next byte is the last byte that should be read. This causes a negative acknowledge to be sent.

3) Read the data byte from SMB_DATA.

4) If last byte, issue STOP or repeated START before one byte time (nine clocks) otherwise another byte will be latched into the SMB_DATA and SMB I/O Offset 01h[6] will be set. Before generating a STOP condition or generating a repeated START condition, it is necessary to perform an SDA read and clear SMB I/O Offset 01h[6].

Master STOP

To end a transaction, set SMB I/O Offset 03h[1] before clearing the current STALL flag (i.e., the SDAST, NEGACK, or STASTR bit of SMB I/O Offset 01h). This causes the SMB to send a STOP condition immediately, and to clear SMB I/O Offset 03h[1]. A STOP condition may be issued only when the device is the active bus master (SMB I/O Offset 01h[1] is set).

Master Bus Stall

The SMB Controller can stall the bus between transfers while waiting for the host response. The bus is stalled by holding the SCL signal low after the acknowledge cycle. Note that this is interpreted as the beginning of the following bus operation. The user must make sure that the next operation is prepared before the flag that causes the bus STALL is cleared.

The flags that can cause a bus STALL in master mode are:

- Negative acknowledge after sending a byte (SMB I/O Offset 01h[4] = 1).
- SMB I/O Offset 01h[6] is set.
- SMB I/O Offset 03h[7] = 1, after a successful START (SMB I/O Offset 01h[3] = 1).

Repeated START

A repeated START is performed when the device is already the bus master (SMB I/O Offset 01h[1] is set). In this case, the bus is stalled and the SMB Controller awaits host handling due to: negative acknowledge (SMB I/O Offset 01h[4] = 1), empty buffer (SMB I/O Offset 01h[6] = 1), and/or a STALL after START (SMB I/O Offset 01h[3] = 1).

For a repeated START:

1) Set SMB I/O Offset 03h[0] = 1.

2) In master receive mode, read the last data item from SMB_SDA.

3) Follow the address send sequence, as described in “Write the address byte (7-bit target device address) and the direction bit to SMB_SDA (SMB I/O Offset 00h). This causes the SMB Controller to generate a transaction. At the end of this transaction, the acknowledge bit received is copied to SMB I/O Offset 01h[4]. During the transaction, the SDA and SCL lines are continuously checked for conflict with other devices. If a conflict is detected, the transaction is aborted, SMB I/O Offset 01h[5] is set, and SMB I/O Offset 01h[1] is cleared.

Downloaded from Arrow.com.

4) If the SMB Controller was awaiting handling due to SMB I/O Offset 01h[3] = 1, clear it only after writing the requested address and direction to SMB_DATA.

Master Error Detection

The SMB Controller detects illegal START or STOP conditions (i.e., a START or STOP condition within the data transfer, or the acknowledge cycle) and a conflict on the data lines of the bus. If an illegal condition is detected, SMB I/O Offset 01h[5] is set and master mode is exited (SMB I/O Offset 01h[1] is cleared).

Bus Idle Error Recovery

When a request to become the active bus master or a restart operation fails, SMB I/O Offset 01h[5] is set to indicate the error. In some cases, both the device and the other device may identify the failure and leave the bus idle. In this case, the START sequence may be incomplete and the bus may remain deadlocked.

To recover from deadlock, use the following sequence:

1) Clear SMB I/O Offset 01h[5] and SMB I/O Offset 02h[1].
2) Wait for a time-out period to check that there is no other active master on the bus (i.e., SMB I/O Offset 02h[1] remains cleared).
3) Disable, and re-enable the SMB Controller to put it in the non-addressed slave mode. This completely resets the functional block.

At this point, some of the slaves may not identify the bus error. To recover, the SMB Controller becomes the bus master: it asserts a START condition, sends an address byte, then asserts a STOP condition that synchronizes all the slaves.

5.11.1.7 Slave Mode

A slave device waits in Idle mode for a master to initiate a bus transaction. Whenever the SMB Controller is enabled and it is not acting as a master (i.e., SMB I/O Offset 01h[1] is cleared), it acts as a slave device.

Once a START condition on the bus is detected, the device checks whether the address sent by the current master matches either:

- The SMB I/O Offset 04h[6:0] value if SMB I/O Offset 04h[7] = 1, or
- The general call address if SMB I/O Offset 03h[5] = 1.

This match is checked even when SMB I/O Offset 01h[1] is set. If a bus conflict (on SDA or SCL) is detected, SMB I/O Offset 01h[5] is set, SMB I/O Offset 01h[1] is cleared and the device continues to search the received message for a match.

If an address match or a global match is detected:

1) The device asserts its SDA line during the acknowledge cycle.
2) SMB I/O Offset 02h[2] and SMB I/O Offset 01h[2] are set. If SMB I/O Offset 01h[0] = 1 (i.e., slave transmit mode) SMB I/O Offset 01h[6] is set to indicate that the buffer is empty.
3) If SMB I/O Offset 03h[2] is set, an interrupt is generated if both SMB I/O Offset 03h[2] and SMB I/O Offset 03h[6] are set.
4) The software then reads SMB I/O Offset 01h[0] to identify the direction requested by the master device. It clears SMB I/O Offset 01h[2] so future byte transfers are identified as data bytes.

Slave Receive and Transmit

Slave receive and transmit are performed after a match is detected and the data transfer direction is identified. After a byte transfer, the SMB Controller extends the acknowledge clock until the software reads or writes the SMB_SDA register. The receive and transmit sequences are identical to those used in the master routine.

Slave Bus Stall

When operating as a slave, the device stalls the bus by extending the first clock cycle of a transaction in the following cases:

- SMB I/O Offset 01h[6] is set.
- SMB I/O Offset 01h[2] and SMB I/O Offset 03h[6] are set.

Slave Error Detection

The SMB Controller detects an illegal START and STOP condition on the bus (i.e., a START or STOP condition within the data transfer or the acknowledge cycle). When this occurs, SMB I/O Offset 01h[5] is set and SMB I/O Offset 02h[2] and SMB I/O Offset 02h[3] are cleared, setting the SMB Controller as an unaddressed slave.

5.11.1.8 Configuration

SDA and SCL Signals

The SDA and SCL are open-drain signals. The device permits the user to define whether to enable or disable the internal pull-up of each of these signals.

SMB Clock Frequency

The SMB permits the user to set the clock frequency for the System Management Bus clock. The clock is set by the SMB I/O Offset 05h[7:1] field and the SMB_CTRL3 register, which determines the SCL clock period used by the device. This clock low period may be extended by stall periods initiated by the SMB or by another System Management Bus device. In case of a conflict with another bus master, a shorter clock high period may be forced by the other bus master until the conflict is resolved.

Downloaded from Arrow.com.

5.11.1.9 Transaction Types

Byte Write

Sequence of events (see Figure 5-28):

1) START
2) Address phase
3) Acknowledge
4) Word address
5) Acknowledge
6) Data
7) Acknowledge
8) STOP

Page Write

Sequence of Events (see Figure 5-29):

1) START
2) Address
3) Acknowledge
4) Word Address
5) Acknowledge
6) Data1
7) Acknowledge
8) Data(n)
9) Acknowledge
10) Data(n+1)
11) Acknowledge
12) Data(n+x)
13) Acknowledge
14) STOP

Current Address Read

Sequence of Events (see Figure 5-30):

1) START
2) Device Address - 8 bit
3) Acknowledge
4) Data
5) No Acknowledge
6) STOP

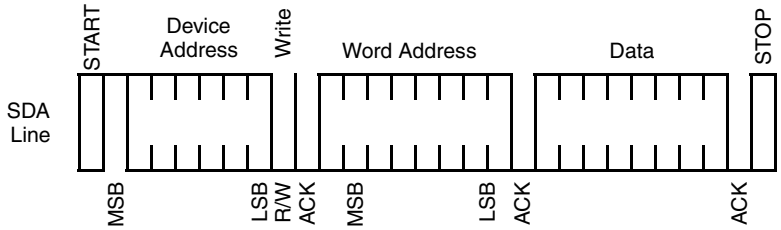

Figure 5-28. SMB Byte Write

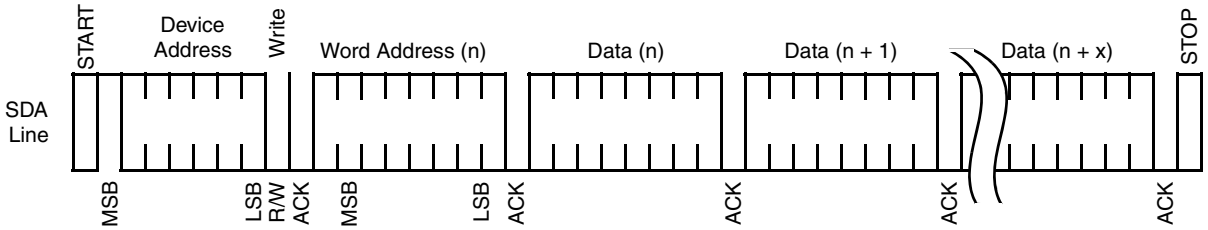

Figure 5-29. SMB Page Write

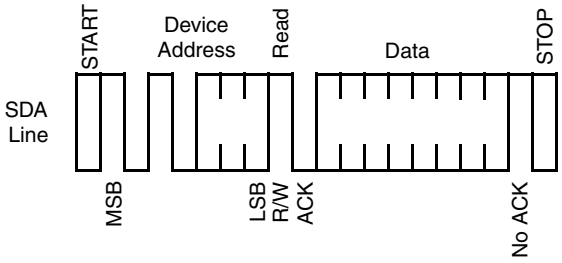

Figure 5-30. SMB Current Address Read

Downloaded from Arrow.com.

Random Read

Sequence of Events (see Figure 5-31):

1) START
2) Device Address
3) Acknowledge
4) Word Address(n)
5) Acknowledge
6) START
7) Device Address
8) Acknowledge
9) Data(n)
10) No Acknowledge
11) STOP

Sequential Reads

Sequence of Events (see Figure 5-32):

1) START
2) Device Address
3) Acknowledge
4) Data(n)
5) Acknowledge
6) Data(n+1)
7) Acknowledge
8) Data(n+2)
9) Acknowledge
10) Data(n+x)
11) No Acknowledge
12) STOP

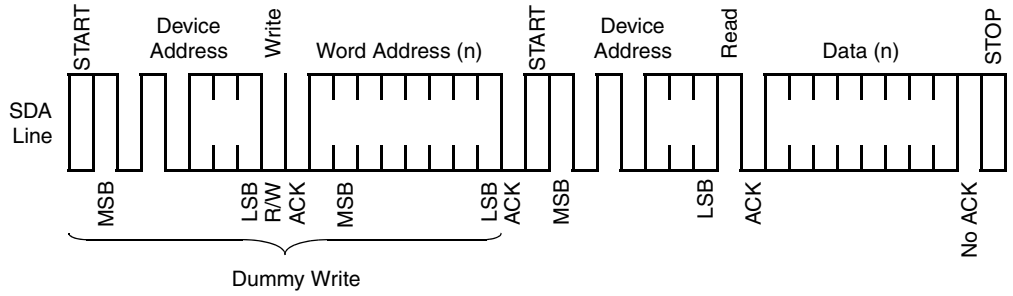

Figure 5-31. SMB Random Read

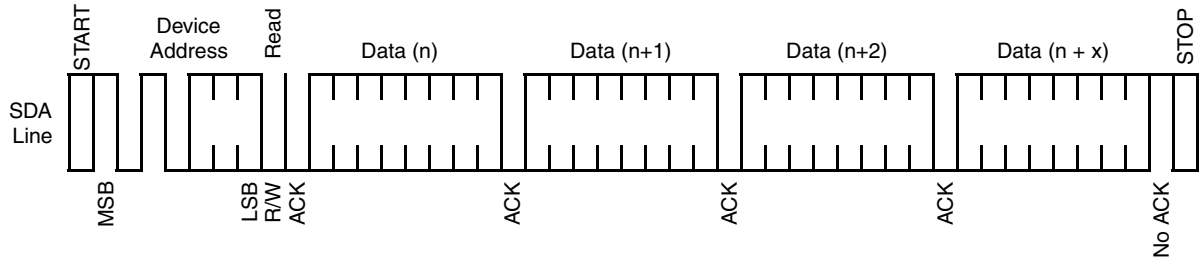

Figure 5-32. SMB Sequential Reads

Downloaded from Arrow.com.

5.12 UART and IR Port

The UART and IR Port (UART/IR Controller) is an enhanced serial port with fast IR (infrared). The UART/IR Controller provides advanced, versatile serial communications features with IR capabilities and supports:

- UART (Section 5.12.1.1 "UART Mode" on page 138)
- Sharp-IR (Section 5.12.1.2 "Sharp-IR Mode" on page 138)
- IrDA 1.0 SIR (Section 5.12.1.3 "SIR Mode" on page 138)
- Consumer Electronic IR (CEIR); also called TV Remote or Consumer remote control (Section 5.12.1.4 "CEIR Mode" on page 139)

In UART mode, the functional block can act as a standard 16450 or 16550, or in extended mode.

Existing 16550-based legacy software is completely and transparently supported. Organization and specific fallback mechanisms switch the functional block to 16550 compatibility mode upon reset, or when initialized by 16550 software.

This functional block has two DMA channels, of which the device can use one or both. One channel is required for IR-based applications, since IR communication works in half-duplex fashion. Two channels are normally needed to handle high speed, full duplex, UART-based applications.

Figure 5-33 shows the serial port connections to the peripheral devices and host, as well as the device configuration.

Features

- Fully compatible with 16550 and 16450 devices (except modem)
- Extended UART mode
- Sharp-IR
- IrDA 1.0 SIR with up to 115.2 kbps data rate
- Consumer-IR mode
- UART mode data rates up to 1.5 Mbps
- Full duplex infrared frame transmission and reception
- Transmit deferral
- Automatic fallback to 16550 compatibility mode
- Selectable 16 and 32 level FIFOs
- 12-bit timer for infrared protocol support
- DMA handshake signal routing for either 1 or 2 channels
- Support for power management
- Virtual dongle interface

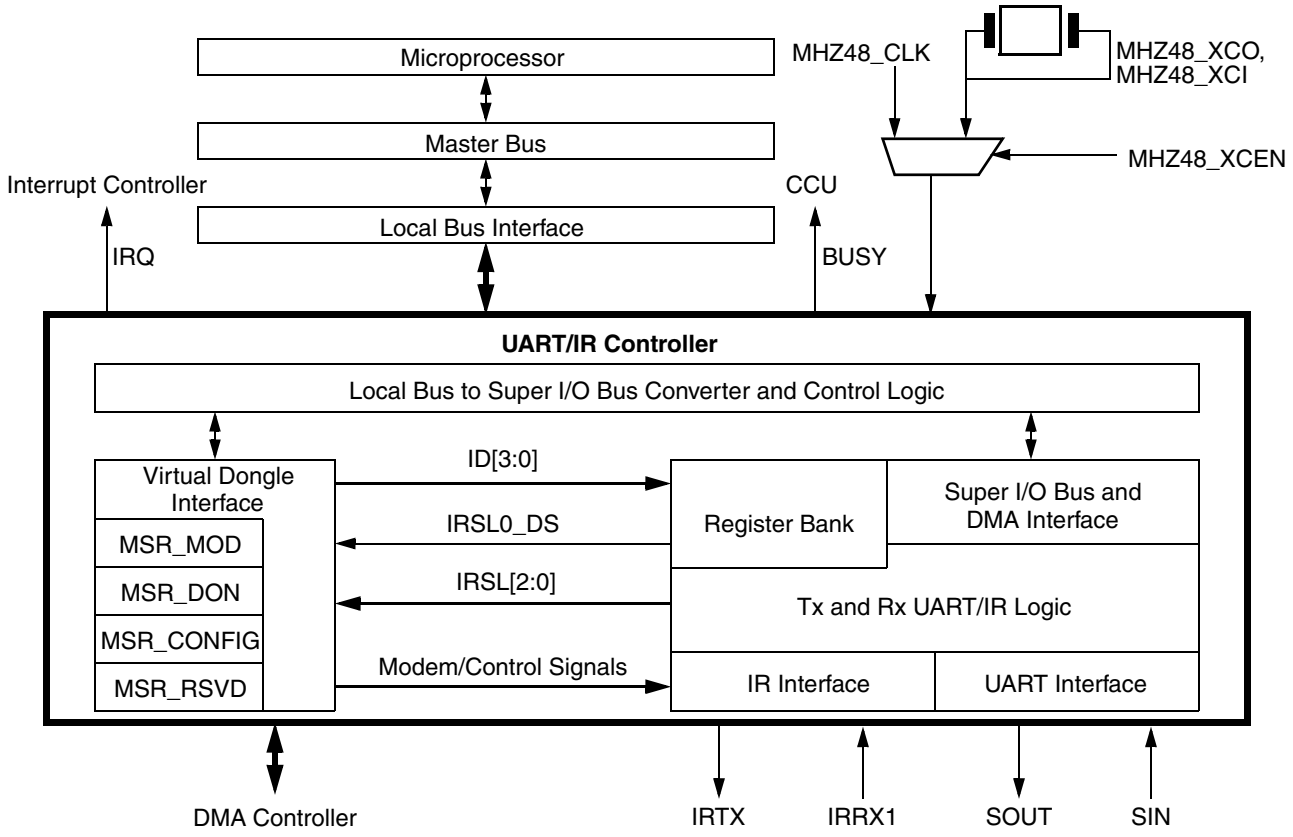

Figure 5-33. UART/IR Overview Diagram

Downloaded from Arrow.com.

5.12.1 Operational Modes

This section describes the operation modes of the UART/IR Controller. Although each mode is unique, certain system resources and features are common.

This discussion references several bits in the UART/IR Controller Native register set. Table 5-20 provides the bit map for the UART/IR Controller Native registers for the reader's convenience. For full bit descriptions, refer to Section 6.12.2 on page 413.

Table 5-20. UART/IR Controller Native Register Bit Map

I/O Offset	Name	7	6	5	4	3	2	1	0
Bank 0									
00h	RXD	RXD7	RXD6	RXD5	RXD4	RXD3	RXD2	RXD1	RXD0
00h	TXD	TXD7	TXD6	TXD5	TXD4	TXD3	TXD2	TXD1	TXD0
01h	IER (Note 1)	RSVD				MS_IE	LS_IE	TXLDL_IE	RXHDL_IE
	IER (Note 2)	RSVD		TXEMP_IE	DMA_IE	MS_IE	LS_IE	TXLDL_IE	RXHDL_IE
02h	EIR (Note 1)	FEN[1:0]		RSVD		RXFT	IPR[1:0]		IPF
	EIR (Note 2)	RSVD		TXEMP_EV	DMA_EV	MS_EV	LS_EV/ TXHLT_EV	TXLDL_EV	RXHDL_IE
	FCR	RXFTH[1:0]		TXFTH[1:0]		RSVD	TXSR	RXSR	FIFO_EN
03h	LCR	BKSE	SBRK	STKP	EPS	PEN	STB	WLS[1:0]	
	BSR	BKSE	BSR[6:0]						
04h	MCR (Note 1)	RSVD			LOOP	ISEN or DCDLP	RILP	RTS	DTR
	MCR (Note 2)	MDSL[2:0]			IR_PLS	TX_DFR	DMA_EN	RTS	DTR
05h	LSR	ER_INF	TXEMP	TXRDY	BRK	FE	PE	OE	RXDA
06h	MSR	DCD	RI	DSR	CTS	DDCD	TERI	DDSR	DCTS
07h	SPR (Note 1)	Scratch Data							
	ASCR (Note 2)	CTE	TXUR	RXACT	RXWDG	RSVD	S_OET	RSVD	RXF_TOUT
Bank 1									
00h	LBGD_L	LBGD[7:0]							
01h	LBGD_H	LBGD[15:8]							
02h	RSVD	RSVD							
03h	LCR	BKSE	SBRK	STKP	EPS	PEN	STB	WLS1	WLS0
	BSR	BKSE	BSR[6:0]						
04-07h	RSVD	RSVD							
Bank 2									
00h	BGD_L	BGD[7:0]							
01h	BGD_H	BGD[15:8]							
02h	EXCR1	RSVD		EDTLBK	LOOP	DMASWP	DMATH	DMANF	EXT_SL
03h	BSR	BKSE	BSR[6:0]						
04h	EXCR2	LOCK	RSVD	PRESL[1:0]		RF_SIZ[1:0]		TF_SIZ1[1:0]	
05h	RSVD	RSVD							
06h	TXFLV	RSVD		TFL[5:0]					
07h	RXFLV	RSVD		RFL[5:0]					

Downloaded from Arrow.com.

Table 5-20. UART/IR Controller Native Register Bit Map (Continued)

I/O Offset	Name	7	6	5	4	3	2	1	0
Bank 3									
00h	MRID	MID[3:0]				RID[3:0]			
01h	SH_LCR	RSVD	SBRK	STKP	EPS	PEN	STB	WLS1	WLS0
02h	SH_FCR	RXFTH[1:0]		TXFTH[1:0]		RSVD	TXSR	RXSR	FIFO_EN
03h	BSR	BKSE	BSR[6:0]						
04h-07h	RSVD	RSVD							
Bank 4									
00h-01h	RSVD	RSVD							
02h	IRCR1	RSVD				IR_SL[1:0]		RSVD	
03h	BSR	BKSE	BSR[6:0]						
04h-07h	RSVD	RSVD							
Bank 5									
00h-02h	RSVD	RSVD							
03h	BSR	BKSE	BSR[6:0]						
04h	IRCR2	RSVD	RSVD	RSVD	AUX_IRRX	RSVD	RSVD	IRMSSL	IR_FDPLX
05h-07h	RSVD	RSVD							
Bank 6									
00h	IRCR3	SHDM_DS	SHMD_DS	RSVD					
01h	RSVD	RSVD							
02h	SIR_PW	RSVD				SPW3	SPW2	SPW1	SPW0
03h	BSR	BKSE	BSR[6:0]						
04h-07h	RSVD	RSVD							
Bank 7									
00h	IRRXDC	DBW[2:0]			DFR[4:0]				
01h	IRTXMC	MCPW[2:0]			MCFR[4:0]				
02h	RCCFG	R_LEN	T_OV	RXHSC	RCDM_DS	RSVD	TXHSC	RC_MMD[1:0]	
03h	BSR	BKSE	BSR[6:0]						
04h	IRCFG1	STRV_MS	RSVD	SET_IRTX	IRRX1_LV	RSVD	IRIC[2:0]		
05h-06h	RSVD	RSVD							
07h	IRCFG4	RSVD		IRSL0_DS	RXINV	IRSL21_DS	RSVD		

Note 1. Non-Extended Mode.

Note 2. Extended Mode.

Downloaded from Arrow.com.

5.12.1.1 UART Mode

UART mode supports serial data communication with a remote peripheral device using a wired interface. This functional block provides receive and transmit channels that can operate concurrently in full-duplex mode. This functional block performs all functions required to conduct parallel data interchange with the system and composite serial data exchange with the external data channel.

It performs parallel-to-serial conversion on data characters received from the processor or a DMA controller, and serial-to-parallel conversion on data characters received from the serial interface. Figure 5-34 shows the serial data stream. A data character contains five to eight data bits. It is preceded by a START bit and is followed by an optional PARITY bit and a STOP bit. Data is transferred in Little Endian order (LSB first).

UART mode can be implemented in standard 16450 and 16550 compatibility (non-extended) and extended mode. UART 16450 compatibility mode is the default after power-up or reset. When extended mode is selected, the functional block architecture changes slightly and a variety of additional features are made available. The interrupt sources are no longer prioritized, and an Auxiliary Status and Control Register (ASCR) replaces the Scratch Pad Register (SPR) (Bank 0 I/O Offset 07h). The additional features include: transmitter FIFO (TX_FIFO) thresholding, DMA capability, and interrupts on transmitter empty states and DMA events.

The clock for both transmit and receive channels is provided by an internal baud generator that divides its input clock by any divisor value from 1 to 2^{16}-1. The output clock frequency of the baud generator must be programmed to be 16 times the baud rate value. The baud generator input clock is derived from a 24 MHz clock through a programmable prescaler. The prescaler value is determined by the PRESL bits in the EXCR2 register (Bank 3 I/O Offset 04h[5:4]). Its default value is 13. This allows all the standard baud rates, up to 115.2 Kbaud, to be obtained. Smaller prescaler values allow baud rates up to 921.6 Kbaud (standard) and 1.5 Kbaud (non-standard).

Before operation can begin, both the communication format and baud rate must be programmed by the software. The communication format is programmed by loading a control byte into the LCR (Link Control Register) (Bank 1 I/O Offset 03h), while the baud rate is selected by loading an appropriate value into the Baud Generator Divisor register. The software can read the status of the functional block at any time during operation. The status information includes Full/Empty states for both transmit and receive channels, and any other condition detected on the received data stream, such as a parity error, framing error, data overrun, or break event.

5.12.1.2 Sharp-IR Mode

This mode supports bidirectional data communication with a remote device, using IR radiation as the transmission medium. Sharp-IR uses Digital Amplitude Shift Keying (DASK) and allows serial communication at baud rates up to 38.4 Kbaud. The format of the serial data is similar to that of the UART data format. Each data WORD is sent serially, beginning with a 0 value START bit, followed by up to eight data bits (LSB first), an optional parity bit, and ending with at least one STOP bit, with a binary value of 1. A logical 0 is signalled by sending a 500 KHz continuous pulse train of IR radiation. A logical 1 is signalled by the absence of an IR signal. This functional block can perform the modulation and demodulation operations internally, or can rely on the external optical module to perform them.

Sharp-IR device operation is similar to operation in UART mode. The difference being that data transfer operations are normally performed in half-duplex fashion, and the modem control and status signals are not used. Selection of the Sharp-IR mode is controlled by the Mode Select bits in the MCR (Bank 0 I/O Offset 04h[7:5]) when the functional block is in extended mode, or by the IR_SL bits in the IRCR1 (Bank 4 I/O Offset 02h[3:2]) when the functional block is in non-extended mode.) This prevents legacy software, running in non-extended mode, from spuriously switching the functional block to UART mode when the software writes to the MCR.

5.12.1.3 SIR Mode

SIR mode supports bidirectional data communication with a remote device, using IR radiation as the transmit medium. SIR allows serial communication at baud rates up to 115.2 Kbaud. The serial data format is similar to that of the UART data format. Each data WORD is sent serially, beginning with a 0 value START bit, followed by eight data bits (LSB first), an optional PARITY bit, and ending with at least one STOP bit, with a binary value of 1. A 0 value is signalled by sending a single IR pulse. A 1 value is signalled by the absence of a pulse. The width of each pulse can be either 1.6 μs or 3/16 of the time required to transmit a single bit (1.6 μs equals 3/16 the time required to transmit a single bit at 115.2 kbps). This way, each WORD begins with a pulse at the START bit.

Operation in SIR is similar to that of the UART mode. The difference being that data transfer operations are normally performed in half-duplex fashion. Selection of the IrDA 1.0 SIR mode is controlled by the Mode Select bits in the MCR (Bank 0 I/O Offset 04h[7:5]) when the UART is in extended mode, or by the IR_SL bits in the IRCR1 register (Bank 4 I/O Offset 02h[3:2]) when the UART is in non-extended mode. This prevents legacy software, running in non-extended mode, from spuriously switching the functional block to UART mode when the software writes to the MCR.

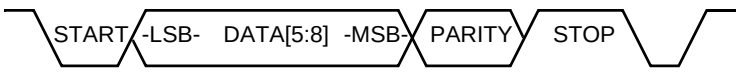

Figure 5-34. UART Serial Data Stream Format

Downloaded from Arrow.com.

5.12.1.4 CEIR Mode

The Consumer Electronics IR circuitry is designed to optimally support all major protocols presently used in the following remote-controlled home entertainment equipment: RC-5, RC-6, RECS 80, NEC, and RCA. This device, in conjunction with an external optical device, provides the physical layer functions necessary to support these protocols. Such functions include: modulation, demodulation, serialization, de-serialization, data buffering, status reporting, interrupt generation, etc. The software is responsible for the generation of IR code transmitted, and the interpretation of received code.

CEIR Transmit Operation

The transmitted code consists of a sequence of bytes that represents either a bit string or a set of run-length codes. The number of bits or run-length codes needed to represent each IR code bit depends on the IR protocol used. The RC-5 protocol, for example, needs two bits or between one and two run-length codes to represent each IR code bit.

Transmission is initiated when the processor or DMA controller writes code bytes into the empty TX_FIFO. Transmission is completed when the processor sets the S_EOT bit (Bank 0 I/ O Offset 07h[2]), before writing the last byte, or when the DMA controller activates the terminal count (TC). Transmission also terminates if the processor simply stops transferring data and the transmitter becomes empty. In this case, however, a transmitter-underrun condition is generated that must be cleared in order to begin the next transmission.

The transmission bytes are either de-serialized or run-length encoded, and the resulting bit-string modulates a carrier signal that is sent to the transmitter LED. The transfer rate of this bit-string, like in UART mode, is determined by the value programmed in the Baud Generator Divisor Register. Unlike a UART transmission, START, STOP, and PARITY bits are not included in the transmitted data stream. A logic 1 in the bit-string keeps the LED off, so no IR signal is transmitted. A logic 0 generates a sequence of modulating pulses that turn on the transmitter LED. Frequency and pulse width of the modulating pulses are programmed by the MCFR and MCPW fields in the IRTXMC register (Bank 7 I/O Offset 01h[7:5, 4:0]), as well as the TXHSC bit of the RCCFG register (Bank 7 I/O Offset 02h[2]).

The RC_MMD field (Bank 7 I/O Offset 02h[1:0]) selects the transmitter modulation mode. If C_PLS mode is selected, modulating pulses are generated continuously for the entire logic 0 bit time. If 6_PLS or 8_PLS mode is selected, six or eight pulses are generated each time a logic 0 bit is transmitted following a logic 1 bit.

C_PLS modulation mode is used for RC-5, RC-6, NEC, and RCA protocols. 8_PLS or 6_PLS modulation mode is used for the RECS 80 protocol. The 8_PLS or 6_PLS mode allows minimization of the number of bits needed to represent the RECS 80 IR code sequence. The current transmitter implementation supports only the modulated modes of the RECS 80 protocol; it does not support the Flash mode.

Note: The total transmission time for the logic 0 bits must be equal to or greater than six or eight times the period of the modulation subcarrier, otherwise fewer pulses are transmitted.

CEIR Receive Operation

The CEIR receiver is significantly different from a UART receiver. The incoming IR signals are DASK modulated; therefore, demodulation may be necessary. Also, there are no START bits in the incoming data stream.

The operations performed by the receiver, whenever an IR signal is detected, are slightly different, depending on whether or not receiver demodulation is enabled. If demodulation is disabled, the receiver immediately becomes active. If demodulation is enabled, the receiver checks the carrier frequency of the incoming signal and becomes active only if the frequency is within the programmed range. Otherwise, the signal is ignored and no other action is taken.

When the receiver enters the Active state, the RXACT bit (Bank 0 I/O Offset 07h[5]) is set to 1. Once in the Active state, the receiver keeps sampling the IR input signal and generates a bit-string, where a logic 1 indicates an Idle condition and a logic 0 indicates the presence of IR energy. The IR input is sampled regardless of the presence of IR pulses at a rate determined by the value loaded into the Baud Generator Divisor Registers. The received bit-string is either de-serialized and assembled into 8-bit characters, or is converted to run-length encoded values. The resulting data bytes are then transferred into the receiver FIFO (RX_FIFO).

The receiver also sets the RXWDG bit (Bank 0 I/O Offset 07h[4]) each time an IR pulse signal is detected. This bit is automatically cleared when the ASCR is read. It is intended to assist the software in determining when the IR link has been Idle for a period of time. The software can then stop data from being received by writing a 1 into the RXACT bit to clear it, and return the receiver to the inactive state.

The frequency bandwidth for the incoming modulated IR signal is selected by the DFR and DBW fields in the IRRXDC register (Bank 7 I/O Offset 00h). There are two CEIR receive data modes: Oversampled and Programmed T Period. For either mode, the sampling rate is determined by the setting of the Baud Generator Divisor Registers.

Downloaded from Arrow.com.

Oversampled mode can be used with the receiver demodulator either enabled or disabled. It should be used with the demodulator disabled when a detailed snapshot of the incoming signal is needed; for example, to determine the period of the carrier signal. If the demodulator is enabled, the stream of samples can be used to reconstruct the incoming bit-string. To obtain good resolution, a fairly high sampling rate should be selected.

Programmed T Period mode should be used with the receiver demodulator enabled. The T Period represents one-half bit time for protocols using biphase encoding or the basic unit of pulse distance for protocols using pulse distance encoding. The baud is usually programmed to match the T Period. For long periods of logic low or high, the receiver samples the demodulated signal at the programmed sampling rate.

When a new IR energy pulse is detected, the receiver synchronizes the sampling process to the incoming signal timing. This reduces timing-related errors and eliminates the possibility of missing short IR pulse sequences, especially with the RECS 80 protocol. In addition, the Programmed T Period sampling minimizes the amount of data used to represent the incoming IR signal, therefore reducing the processing overhead in the host CPU.

5.12.1.5 FIFO Timeouts

Timeout mechanisms are provided to prevent received data from remaining in the RX_FIFO indefinitely, in case the programmed interrupt or DMA thresholds are not reached.

An RX_FIFO timeout generates a Receiver Data Ready interrupt and/or a receiver DMA request if bit 0 of the IER register (Bank 0 I/O Offset 01h[0]) and/or bit 2 of the MCR register (in Extended mode) (I/O Offset 04h[2]) are set to 1, respectively. An RX_FIFO timeout also sets bit 0 of the ASCR register (I/O Offset 07h[0]) to 1 if the RX_FIFO is below the threshold. When a Receiver Data Ready interrupt occurs, this bit is tested by the software to determine whether a number of bytes indicated by the RX_FIFO threshold can be read without checking bit 0 of the LSR register (I/O Offset 05h).

The conditions that must exist for a timeout to occur in the modes of operation are described below. When a timeout has occurred, it can only be reset when the FIFO is read by the processor or DMA controller.

Timeout Conditions for UART, SIR, and Sharp-IR Modes

RX_FIFO timeout conditions:

- At least one byte is in the RX_FIFO.
- More than four character times have elapsed since the last byte was loaded into the RX_FIFO from the receiver logic.
- More than four character times have elapsed since the last byte was read from the RX_FIFO by the processor or DMA controller.

Timeout Conditions for CEIR Mode

The RX_FIFO timeout in CEIR mode is disabled while the receiver is active. The conditions for this timeout to occur are as follows:

- At least one byte has been in the RX_FIFO for 64 µs or more.
- The receiver has been inactive (RXACT = 0) for 64 µs or more.
- More than 64 µs have elapsed since the last byte was read from the RX_FIFO by the processor or DMA controller.

5.12.1.6 Transmit Deferral

This feature allows software to send short, high speed data frames in PIO mode without the risk of generating a transmitter underrun.

Transmit deferral is available only in extended mode and when the TX_FIFO is enabled. When transmit deferral is enabled (I/O Offset 04h[3] = 1) and the transmitter becomes empty, an internal flag is set and locks the transmitter. If the processor now writes data into the TX_FIFO, the transmitter does not start sending the data until the TX_FIFO level reaches either 14 for a 16-level TX_FIFO or 30 for a 32-level TX_FIFO, at which time the internal flag is cleared. The internal flag is also cleared and the transmitter starts transmitting when a timeout condition is reached. This prevents some bytes from being in the TX_FIFO indefinitely if the threshold is not reached.

The timeout mechanism is implemented by a timer that is enabled when the internal flag is set and there is at least one byte in the TX_FIFO. Whenever a byte is loaded into the TX_FIFO, the timer is reloaded with the initial value. If no byte is loaded for a 64 µs time, the timer times out and the internal flag is cleared, thus enabling the transmitter.

Downloaded from Arrow.com.

5.12.1.7 Automatic Fallback to 16550 Compatibility Mode

This feature is designed to support existing legacy software packages, using the 16550 serial port. For proper operation, many of these software packages require that the device look identical to a plain 16550, since they access the serial port registers directly. Because several extended features and new operational modes are provided, make sure the device is in the proper state before executing a legacy program.

The fallback mechanism eliminates the need to change the state when a legacy program is executed following completion of a program that used extended features. It automatically switches the device to 16550 compatibility mode and turns off any extended features whenever the Baud Generator Divisor Register is accessed through the LBGD_L or LBGD_H ports in register Bank 1.

In order to avoid spurious fallbacks, baud generator divisor ports are provided in Bank 2. Baud generator divisor access through these ports changes the baud rate setting but does not cause fallback.

New programs designed to take advantage of the extended features should not use LBGD_L and LBGD_H to change the baud rate. Instead, they should use BGD_L and BGD_H.

A fallback can occur in either extended or non-extended modes. If extended mode is selected, fallback is always enabled. In this case, when a fallback occurs, the following happens:

- TX_FIFO and RX_FIFO switch to 16 levels.
- A value of 13 is selected for the baud generator prescaler.
- ETDLBK and LOOP of the EXCR1 register are cleared (Bank 2 I/O Offset 02h[5:4]).
- UART mode is selected.
- The functional block switches to non-extended mode.

When fallback occurs from non-extended mode, only the first three of the above actions occur. If either Sharp-IR or SIR infrared modes were selected, no switching to UART mode occurs. This prevents spurious switching to UART mode when a legacy program, running in Infrared mode, accesses the Baud Generator Divisor Register from Bank 1.

Fallback from non-extended mode can be disabled by setting LOCK in the EXCR2 register to 1 (I/O Offset 04h[7] = 1). When LOCK is set and the functional block is in non-extended mode, two scratch pad registers overlaid with LBGD_L and LBGD_H are enabled. Any attempted processor access of the Baud Generator Divisor Register through LBGD_L and LBGD_H accesses the scratch pad registers, without affecting the baud rate setting. This feature allows existing legacy programs to run faster than 115.2 Kbaud, without realizing they are running at this speed.

5.12.2 Modem Support

An MSR (MSR_UART[x]_MOD) (UART1 MSR 51400038h and UART2 MSR 5140003Ch) mimics modem input signals for making it compatible with the software having modem support. The hardware of this device has all the required functionality for modem compatibility.

Downloaded from Arrow.com.

5.12.3 Dongle Interface

The dongle interface on the CS5536 companion device is not a fully hardware compatible interface. The real dongle interface requires six external interface signals and the CS5536 companion device only supports three. With only three signals, the dongle interface supports a subset of the real dongle interface through virtualization.

5.12.3.1 Real Dongle

The real dongle interface uses six multiplexed pins for dongle identification, data transfer, and transceiver configuration. Figure 5-35 on page 142 illustrates the real dongle interface and Table 5-21 provides the interface signals and their descriptions.

Only three signals (IRTX, IRRX, and ID0/IRSL0/IRRX2) are used for the IR interface. It has three phases:

Phase 1:

Change the ID0-ID3 bits to input mode, and read the status to complete primary identification of the dongle.

Phase 2:

Change ID1 and ID2 as output and read the status of ID0 and ID3 to complete the secondary dongle identification phase. This phase provides information about the connected dongle.

Phase 3:

Configure mode: Change IRSL[2:0] to an output and configure the transceiver for the required mode. If two infrared inputs are required, change IRSL0 to an input to give the second receiver channel IRRX2. The IRSL2 and IRSL1 are configured as outputs to keep the transceiver in the required mode.

Table 5-21. Real Dongle Interface Signals

Signal Name	Type	Description
IRTX	O	Infrared transmit data
IRRX	I	Infrared receive data
ID0/IRSL0/IRRX2	I/O	Identification signal 0 Infrared mode select 0 Infrared receive data for transceivers with two RX channels
ID1/IRSL1	I/O	Identification signal 1 Infrared mode select 1
ID2/IRSL2	I/O	Identification signal 2 Infrared mode select 2
ID3	I/O	Identification signal 2

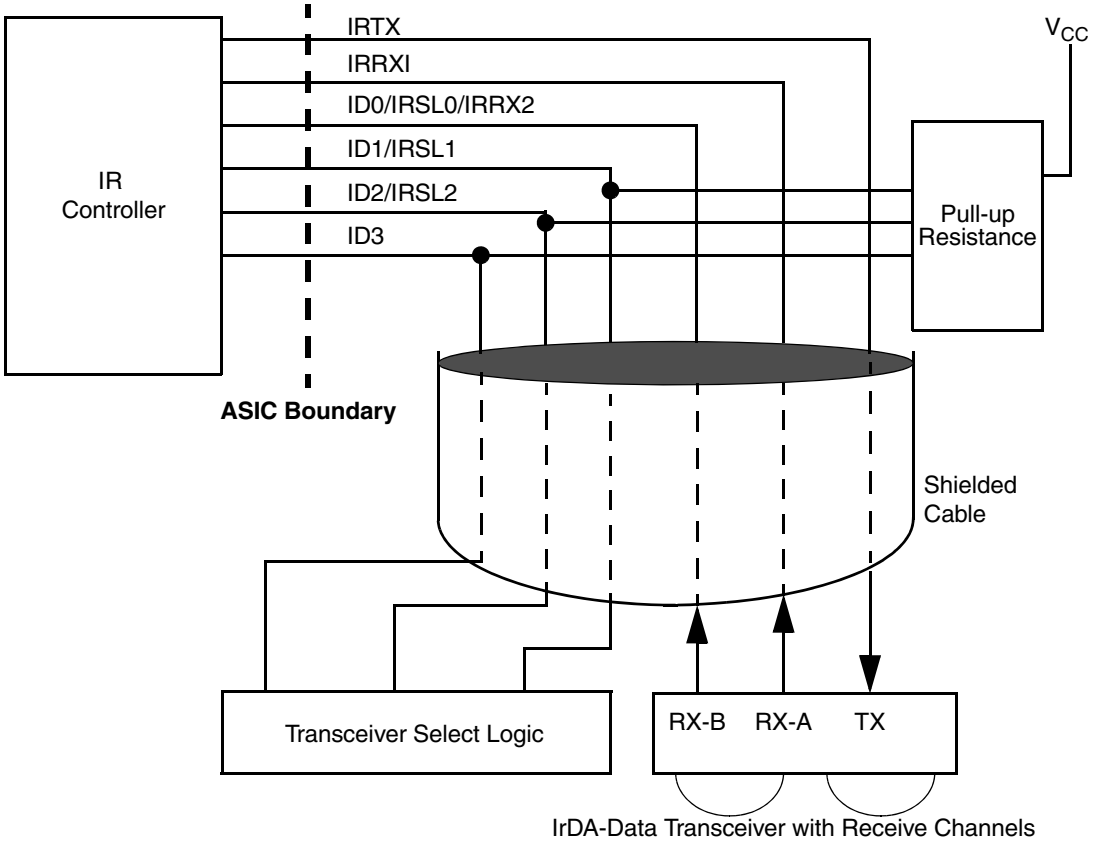

Figure 5-35. Real Dongle Interface

Downloaded from Arrow.com.

5.12.3.2 Virtual Dongle

The virtual dongle interface is used due to the unavailability of pins for dongle identification and configuration (see Figure 5-36).

The virtual dongle interface is a method used to run legacy software on the UART/IR Controller. The virtual dongle interface uses dedicated UART/IR MSRs. (See Section 6.12.1 "UART/IR Controller Specific MSRs" on page 410 for complete register and bit formats.) The virtual dongle imitates the real dongle as far as legacy software is concerned, and there are no plug-and-play requirements for IR transceivers.

- The software inputs the dongle's ID to the ID[0:3] bits of UART[x]_MOD (UART1 MSR 51400038h and UART2 MSR 5140003Ch) as the primary ID encoding.
- For dongles that use a non-serial transceiver, it identifies the Consumer IR capabilities. The software should switch ID1 and ID2 to output mode (so they become IRSL1 and IRSL2). IRSL1 and IRSL2 will or will not behave differently (i.e., INV [invert] or NCH [no change]) from the previous step and the software should respond by driving the appropriate level on ID0 and ID3 in the UART[x]_DONG register.

The operational mode of an infrared dongle that uses a non-serial transceiver is selected by driving the IRSL[2:0] signals.

Features

- Uses only three pins to connect to IR transceiver.
- Fully supports legacy software written for real dongle, with some manual intervention.
- All real dongle modes can be supported by changing the MSR.

Limitations

- No Plug-and-Play features available.
- IRSL1 and IRSL2 pins must be tied in the IR transceiver for the required mode.
- MSR contents must be changed when changing the transceiver mode. If BIOS is used to change the MSR contents, it must be a factory setting.
- If the legacy software supports IR transceiver configuration, the contents of IRSL[2:0] are to be read from the MSR and the required bit tieing must be done in the transceiver board.

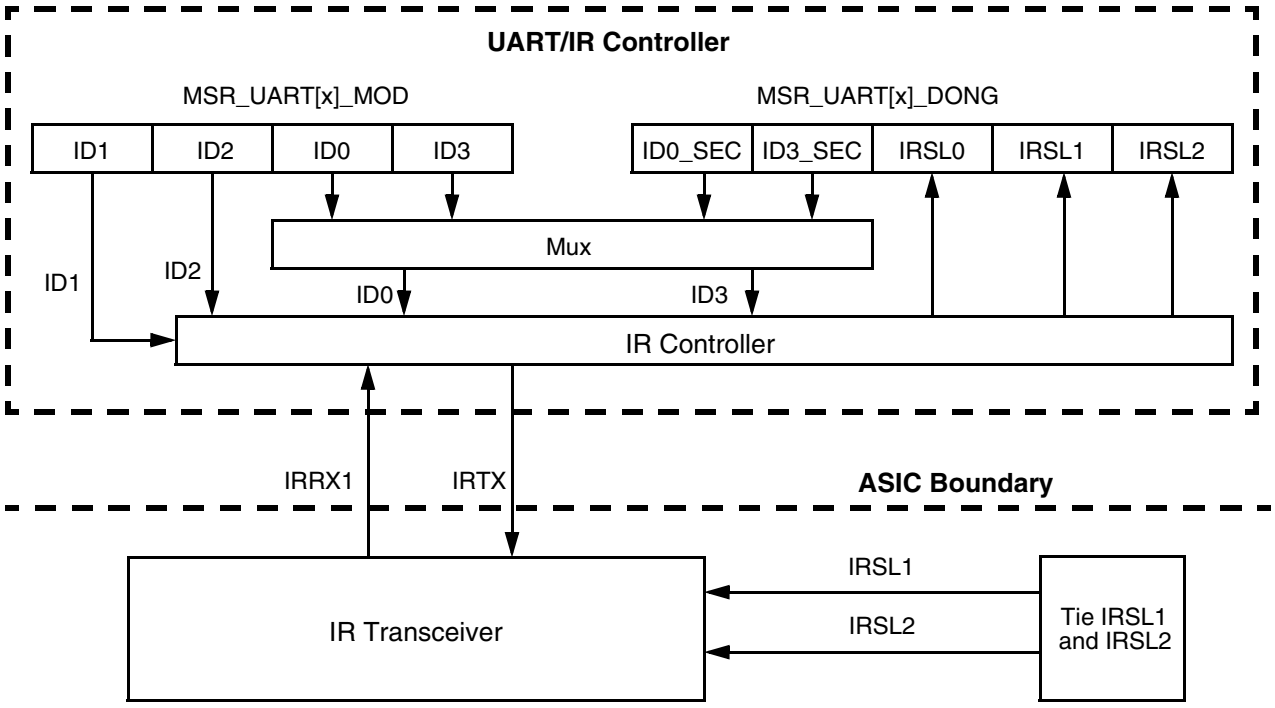

Figure 5-36. Virtual Dongle Interface

Downloaded from Arrow.com.

5.13 Low Pin Count Port

The Low Pin Count port is based on Intel's *Low Pin Count (LPC) Interface Specification v1.0*. In addition to the required pins, the CS5536 companion device also supports two optional pins: LDRQ# and SERIRQ. The LPC interface supports memory, I/O, DMA, and Intel's Firmware Hub Interface. Figure 5-37 shows the block diagram of the LPC port.

Features

- Based on Intel's Low Pin Count (LPC) Specification v1.0.
- Serial IRQ support.
- Supports memory, I/O, and DMA cycle types.
- Bus master cycles not supported.
- CLKRUN# and LPCPD# not supported. SMI# and PME# supported via GPIOs.
- On-chip DMA transfers through LPC.
- Supports Intel's FirmWare Hub (FWH) Interface:
  — 5 Signal communication interface supporting byte-at-a-time reads and writes.
  — LAD[3:0] called as FWH0-FWH3 and LFRAME# as FWH4.

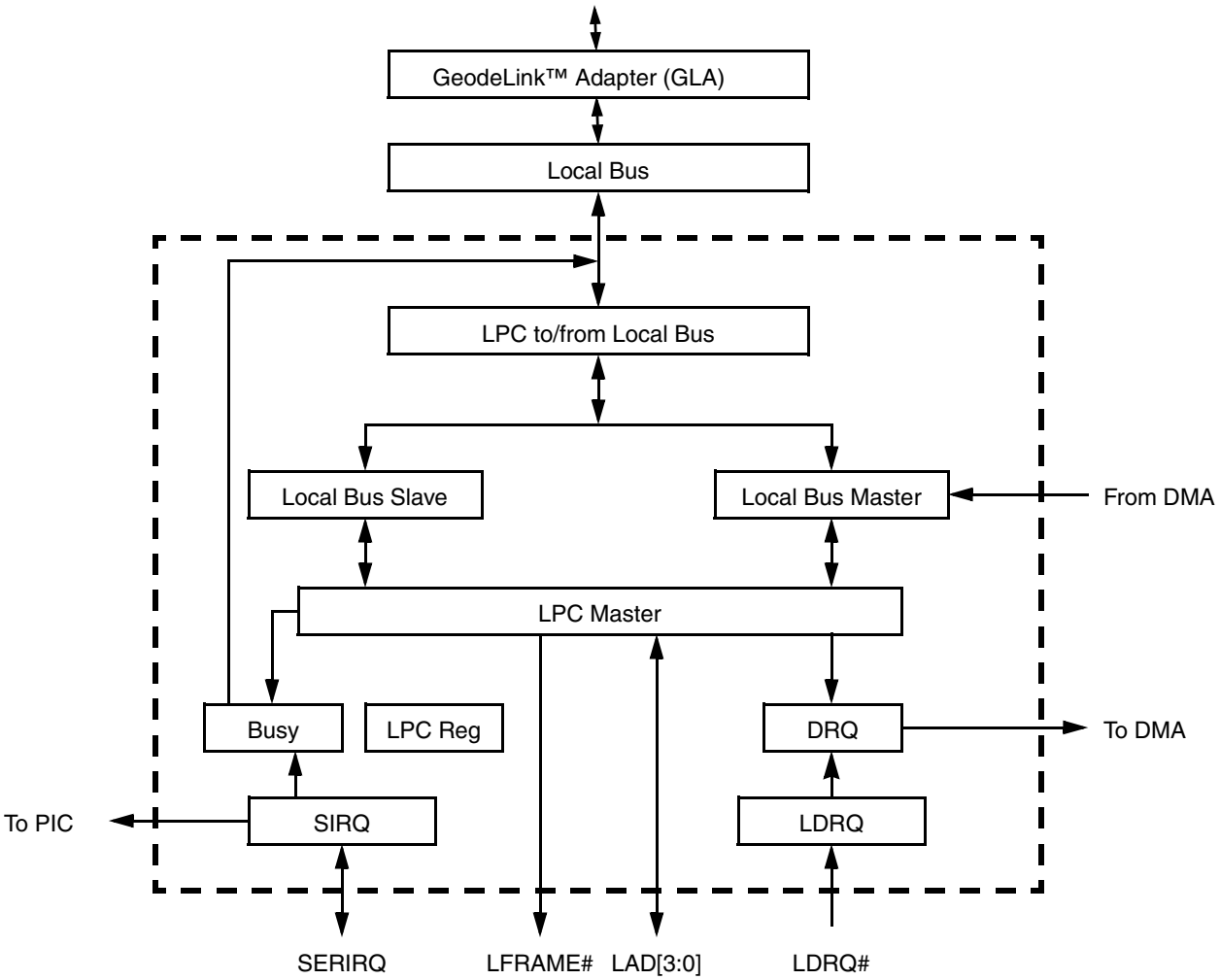

LPC Master	Initiates all transactions on LPC bus, takes/issues requests from Local bus.
Local Bus Master	Takes request from LPC master and DMA.
Local Bus Slave	Issues request to LPC master from Local bus.
SIRQ	Decodes SERIRQ into IRQ to be passed on to PIC.
LDRQ	Decodes LDRQ# into DRQ sets and clears.
DRQ	Combines multiple LDRQ# outputs and passes results to DMA.
LPC Reg	Contains all the LPC I/O registers.
LPC to/from Local Bus	LPC to Local bus interface block.
Busy	Generates busy signal for clock controls.

Figure 5-37. LPC Block Diagram

Downloaded from Arrow.com.

5.13.1 LPC Protocol

The LPC port supports memory read/write, I/O read/write, DMA read/write, and Firmware Hub Interface (see Table 5-22). Data transfers on the LPC bus are serialized over a 4-bit bus.

Table 5-22. Cycle Types Supported

Cycle Type	Size	Size Supported
Intel FWH Read	1 Byte	Yes
Intel FWH Write	1 Byte	Yes
Memory Read	1 Byte	Yes
Memory Write	1 Byte	Yes
I/O Read	1 Byte	Yes
I/O Write	1 Byte	Yes
DMA Read	1, 2, 4 Bytes	1 Byte Only
DMA Write	1, 2, 4 Bytes	1 Byte Only
Bus Master Mem Read	1, 2, 4 Bytes	No
Bus Master Mem Write	1, 2, 4 Bytes	No
Bus Master I/O Read	1, 2, 4 Bytes	No
Bus Master I/O Write	1, 2, 4 Bytes	No

LFRAME# is used by the host to start or stop transfers. No peripherals drive this signal. A cycle is started by the host when it drives LFRAME# active and puts information related to the cycle on the LAD[3:0] signals. The host drives information such as address or DMA channel number. For DMA and target cycles, the host drives cycle type (memory or I/O), read/write direction, and size of the transfer. The host optionally drives data, and turns around to monitor peripherals for completion of the cycle. The peripheral indicates the completion of the cycle by driving appropriate values on the LAD[3:0] signals.

The LAD[3:0] signals communicate address, control, and data information over the LPC bus between the host and the peripheral. The information carried on the LAD signals are: start, stop (abort a cycle), transfer type (memory, I/O, DMA), transfer direction (read/write), address, data, wait states, and DMA channel number. The following sections give an overview of fields used. Detailed field descriptions are provided in Table 5-23 on page 146.

START: This field indicates the start or stop of a transaction. The START field is valid on the last clock that LFRAME# is active. It is used to indicate a device number, or start/stop indication.

CYCTYP: The Cycle Type field is driven by the host when it is performing DMA or target accesses. Bits [3:2] are used for cycle type and bit 1 is used for direction. Bit 0 is reserved.

SIZE: This field is one clock. It is driven by the host on memory and DMA transfers to determine how many bytes are to be transferred. Bits [1:0] are used to determine size and bits [3:2] are reserved.

TAR: The Turn Around field is two clocks, and is driven by the host when it is turning control over to a peripheral and vice versa. In the first clock a host or a peripheral drives the LAD[3:0] lines to 1111, on the second cycle the host or peripheral TRI-STATES the LAD[3:0] lines. These lines have weak pull-ups so they will remain at a logical high state.

ADDR: The Address field is four clocks for I/O cycles and eight clocks for memory cycles. It is driven by the host on target accesses. This field is not driven on DMA cycles. The most significant nibble is driven first.

CHANNEL/Terminal Count: The Channel field is one clock and driven by the host on DMA cycles to indicate the DMA channel. Only 8-bit channels are supported (0, 1, 2, 3). DMA channel is communicated on LAD[2:0] and Terminal Count (TC) is communicated through LAD3. TC indicates the last byte of transfer, based upon the size of the transfer. If an 8-bit transfer and TC is set, then this is the last byte.

DATA: This field is two clocks, representing one byte data. It is driven by the host on target and DMA cycles when data is flowing to the peripheral, and by the peripheral when data is flowing to the host. The lower nibble is driven first.

SYNC: This field can be several clocks in length and is used to add wait states. Driven by the peripheral on target or DMA cycles.

SYNC Timeout:

1) The host starts a cycle, but no device ever drives SYNC valid. If the host observes three consecutive clocks without a valid SYNC, it can abort the cycle.
2) The host starts a cycle, a device drives a SYNC valid to insert wait states (LAD[3:0] = 0101 or 0110), but never completes it. This could happen if the peripheral locks up for some reason. The peripheral should be designed to prevent this case:
   - If the SYNC pattern is 0101, then the maximum number of SYNC clocks is eight. If the host sees more than eight, it may abort the cycle.
   - If the SYNC pattern is 0110, then no maximum number of SYNC clocks took place, the peripheral must have protection mechanisms to complete the cycle.

Downloaded from Arrow.com.

When the host is driving SYNC, it may insert a very large number of wait-states depending on PCI latencies. The peripheral must not assume any timeouts.

SYNC Error Indication: A peripheral can report an error via the LAD[3:0] = 1010 encoding. If the host was reading data from a peripheral, the data is still transferred in the next two nibbles, even though this data is invalid, the peripheral must transfer it. If the host was writing, data had already been transferred.
In DMA, if it was a multiple byte cycle, an error SYNC terminates the cycle.

For more info on SYNC timeout and SYNC error details, refer to the LPC Specification.

Table 5-23. Cycle Field Definitions: Target Memory, I/O, and DMA

Field	# Clocks	Comment
START	1	**Start of Cycle.** 0000 indicates a start of a cycle.
CYCTYP	1	**Cycle Type.** Indicates the type of cycle. Bits [3:0] — Definition 000x — I/O Read 001x — I/O Write 010x — Memory Read 011x — Memory Write 100x — DMA Read 101x — DMA Write 1100 — Reserved 1101 — FWH Read 1110 — FWH Write 1111 — Reserved
CHANNEL	1	**Channel #.** Used only for DMA cycles to indicate channel number being granted. The LAD[2:0] bits indicate the channel number being granted, and LAD[3] indicates the TC bit. The encoding on LAD[2:0] for channel number is as follows: LAD[2:0] — Definition 000 — I/O Read 001 — I/O Write 010 — Memory Read 011 — Memory Write 100-111 — Reserved Only 8-bit channels are supported.
TAR	2	**Turn-Around.** The last component driving LAD[3:0] will drive it high during the first clock and TRI-STATE during the second clock.
SIZE	1	**Size of Transfer.** Used only for DMA cycles. Bits [3:0] are reserved and must be ignored by the peripheral. LAD[1:0] — Definition 00 — 8-Bit 01-11 — Reserved Only 8-bit is supported for all transfers.
DATA	1 Byte DMA: 1 Byte	**Data Phase.** The data byte is transferred with the least significant nibble first (D[3:0] on LAD[3:0], then D[7:4] on LAD[3:0]). **DMA.** The data byte is transferred with the least significant nibble first (D[3:0] on LAD[3:0], then D[7:4] on LAD[3:0]). Only one byte data transfer is supported.
ADDR	8 for Memory, 4 for I/O	**Address Phase.** Address is 32-bit for memory, 16-bit for I/O. It is transferred most significant nibble first. DMA cycles do not use the ADDR field.

Downloaded from Arrow.com.

Table 5-23. Cycle Field Definitions: Target Memory, I/O, and DMA (Continued)

Field	# Clocks	Comment
SYNC	1-N	**Sync:** Allows peripheral or host to synchronize (add wait-states). Generally, the peripheral or host drives 0101 or 0110 until no more wait-states are needed. At that point it will drive 0000. All other combinations are reserved. 0000 Sync achieved with no error. DMA. Sync achieved with no error. Also indicates no more transfer desired for that channel, and DMA request is de-asserted. 0101 Indicates that Sync not achieved yet, but the part is driving the bus. DMA. Part indicating wait states. 0110 Indicates that Sync not achieved yet, but the part is driving the bus, and expect long Sync. DMA. Part indicating wait states, and many wait states will be added. 1010 Special case. Peripheral indicating errors, see sync section in protocol overview. DMA. Sync achieved with error. Also indicates no more transfers desired for that channel, and DMA request is de-asserted. 1001 DMA (only). Sync achieved with no error and more DMA transfer desired to continue after this transfer.

5.13.2 Cycle Protocol

Start of Cycle (see Figure 5-38): The host asserts LFRAME# for one or more clocks and drives a START value on LAD[3:0], all peripherals stop driving the LAD[3:0] signals even if in the middle of a transfer. The peripheral must always use the last START value when LFRAME# was active. On the clock after the START value, the host de-asserts LFRAME#.

Abort Mechanism (see Figure 5-39): The host can cause an abort on the LPC interface by driving LFRAME# active with a START value of 1111. The host must keep LFRAME# active for at least four consecutive clocks and drive LAD[3:0] to 1111 no later than the fourth clock after LFRAME# goes active. The host must drive LFRAME# inactive for at least one clock after an abort.

An abort typically occurs on SYNC timeouts.

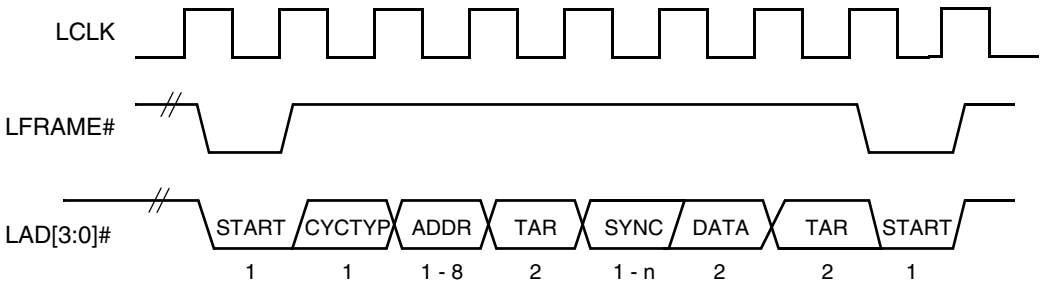

Figure 5-38. Start of Cycle Timing Diagram

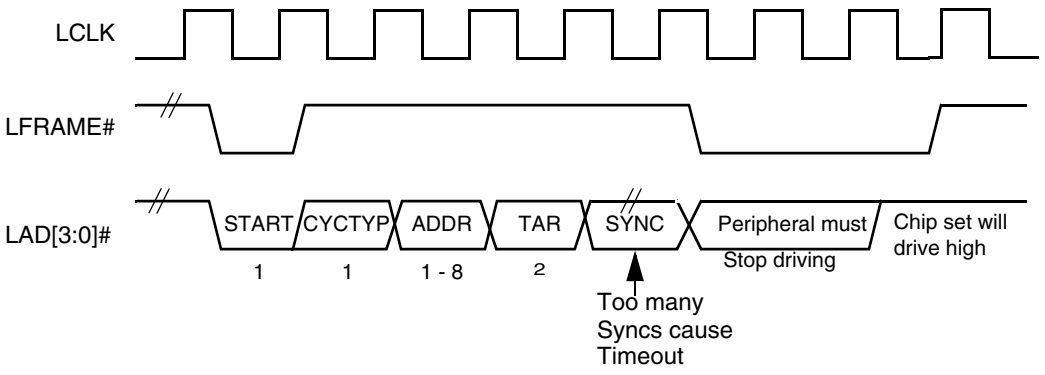

Figure 5-39. Abort Mechanism Timing Diagram

Downloaded from Arrow.com.

5.13.2.1 Host Initiated Cycles

Memory Cycles: Memory read or write cycles are intended for memory-mapped devices. The ADDR field is a full 32 bits, and transmitted with most significant nibble first. Typically a memory device supports much less addressing and ignores address bits above which it is capable of decoding.

I/O Cycles: I/O read or write cycles are intended for peripherals. These cycles are generally used for register or FIFO accesses and have minimal Sync times. Data transfers are assumed to be exactly 1 byte. The host is responsible for breaking up larger data transfers into 8-bit cycles. The minimum number of wait states between bytes is 1.

The host initiated cycles are shown in Table 5-24.

Table 5-24. Host Initiated Cycles

Memory or I/O	Driven By	
	Read Cycle	Write Cycle
START	Host	Host
CYCTYP + DIR	Host	Host
ADDR	Host	Host
TAR	Host	Host
SYNC	Peripheral	Peripheral
DATA	Peripheral	Host
TAR	Peripheral	Peripheral

5.13.2.2 DMA Initiated Cycles

DMA on LPC is handled through the LDRQ# line from peripherals and special encoding on LAD[3:0] for the host. Single, demand, verify, and increment mode are supported on the LPC interface. Block, decrement, and cascade are not supported. Channels 0 through 3 are 8-bit channels. Only 8-bit channels are supported.

Asserting DMA Requests: Peripherals need the DMA service to encode their request channel number on the LDRQ# signal. LDRQ# is synchronous with LCLK. Peripherals start the sequence by asserting LDRQ# low. The next 3 bits contain the encoded DMA channel number with the MSB first. And the next bit (ACT) indicates whether the requested channel is active or not. The case where ACT is low (inactive) will be rare, and is only used to indicate that a previous request for that channel is being abandoned. After indication, LDRQ# should go high for at least one clock. After that one clock, LDRQ# can be brought low for the next encoding sequence (see Figure 5-40.)

DMA Transfer: Arbitration for DMA channels is performed through the 8237 within the host. Once the host won the arbitration, it asserts LFRAME# on the LPC bus. The host starts a transfer by asserting 0000 on LAD[3:0] with LFRAME# asserted. The host's assert "cycle type" and direction is based on the DMA transfer. In the next cycle it asserts channel number and in the following cycle it indicates the size of the transfer.

DMA Reads: The host drives 8 bits of data and turns the bus around, then the peripheral acknowledges the data with a valid SYNC.

DMA Writes: The host turns the bus around and waits for data, then the peripheral indicates data is ready through valid SYNC and transfer of the data.

The DMA initiated cycles are shown in Table 5-25.

Table 5-25. DMA Initiated Cycles

DMA	Driven By	
	Read Cycle (Host to Peripheral)	Write Cycle (Peripheral to Host)
START	Host	Host
CYCTYP	Host	Host
CHANNEL	Host	Host
SIZE	Host	Host
DATA	Host	Host
TAR	Host	Peripheral
SYNC	Peripheral	Peripheral
TAR	Peripheral	Peripheral

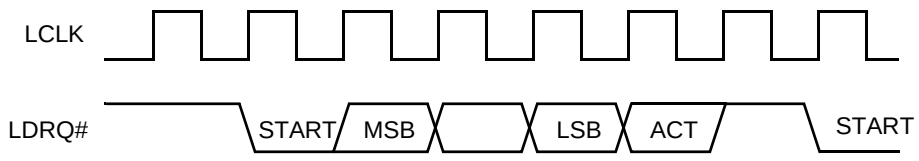

Figure 5-40. DMA Cycle Timing Diagram

Downloaded from Arrow.com.

5.13.3 Serial IRQ

The LPC supports a serial IRQ scheme. This allows a single signal to be used to report ISA-style interrupt requests. Because more than one device may need to share the single serial IRQ signal, an Open Collector signaling scheme is used.

Serial interrupt information is transferred using three types of frames: a Start frame, one or more IRQ Data frames, and one Stop frame (see Figure Figure 5-41, Figure 5-42, and Figure 5-43 on page 150). There are also two modes of operation. Quiet mode, initiated by the peripheral, and Continuous mode, initiated by the host:

1) **Quiet (Active) Mode:** To indicate an interrupt, the peripheral brings the SERIRQ signal active for one clock, and then places the signal in TRI-STATE mode. This brings all the state machines from the Idle state to the Active state.

   The host then takes control of the SERIRQ signal by driving it low on the next clock, and continues driving it low for 3-7 clocks more (programmable). Thus, the total number of clocks low will be 4-8. After those clocks, the host drives SERIRQ high for one clock and then places SERIRQ into TRI-STATE mode.

2) **Continuous (Idle) Mode:** In this mode, the host initiates the Start frame, rather than the peripherals. Typically, this is done to update IRQ status (acknowledges). The host drives SERIRQ low for 4-8 clocks. This is the default mode after reset; it can be used to enter the Quiet Mode.

Data Frame

Once the Start frame has been initiated, all of the serial interrupt peripherals must start counting frames based on the rising edge of the SERIRQ. Each of the IRQ/DATA frames has exactly three phases of one clock each: a Sample phase, a Recovery phase, and a Turn Around phase.

During the sample phase, the device drives SERIRQ low if the corresponding interrupt signals should be active. If the corresponding interrupt is inactive, then the devices should not drive the SERIRQ signal. It will remain high due to pull-up registers. During the other two phases (Turn Around and Recovery), no device should drive the SERIRQ signal. The IRQ/DATA frames have a specific order and usage as shown in Table 5-26.

Stop Frame

After all of the Data frames, a Stop frame is performed by the host. This is accomplished by driving SERIRQ low for two to three clocks. The number of clocks determines the next mode:

- If the SERIRQ is low for two clocks, the next mode is the Quiet mode. Any device may initiate a Start frame in the second clock (or more) after the rising edge of the Stop frame.
- If SERIRQ is low for three clocks, the next cycle is the Continuous mode. Only the host may initiate a Start frame in the second clock (or more) after the rising edge of the Stop frame.

Table 5-26. IRQ Data Frames

Date Frame Number	Usage
0	IRQ0
1	IRQ1
2	SMI# (Not Supported)
3	IRQ3
4	IRQ4
5	IRQ5
6	IRQ6
7	IRQ7
8	IRQ8
9	IRQ9
10	IRQ10
11	IRQ11
12	IRQ12
13	IRQ13
14	IRQ14
15	IRQ15
31-16	Unassigned

Downloaded from Arrow.com.

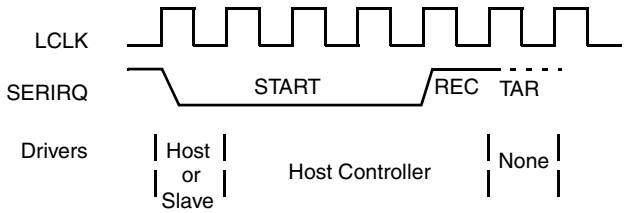

START: Start pulse width can be from 4-8 cycles, the width is determined by the value of START width.
REC: Recover, host actively drives SERIRQ high.
TAR: Turn Around Cycle. Dead cycle to prevent bus contention.

Figure 5-41. Start Frame Waveform

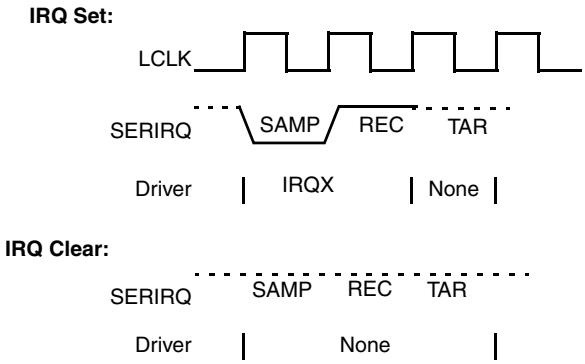

SAMP: Sample, slave drives low or leaves high.
REC: Recover, slave actively drives SERIRQ high if driven low during sample.
TAR: Turn Around Cycle. Dead cycle to prevent bus contention.

Figure 5-42. IRQ Frame Waveform

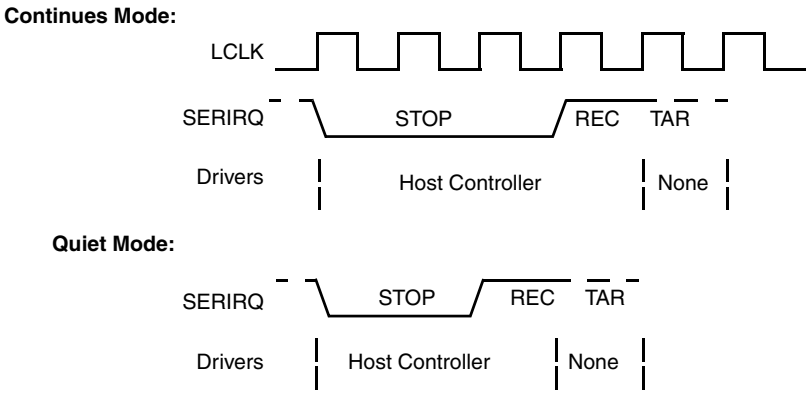

REC: Recover, host actively drives SERIRQ high.
TAR: Turn Around Cycle. Dead cycle to prevent bus contention.

Figure 5-43. Stop Frame Waveform

Downloaded from Arrow.com.

5.13.4 Firmware Hub Interface

The Firmware Hub (FWH) relies on the Intel Firmware Hub interface to communicate with the outside world. This interface consists of four bidirectional signals and one “control” input. The timing and the electrical parameters of the FWH interface are similar to those of the LPC interface. The Intel FWH interface is designed to use an LPC-compatible Start cycle, with a reserved cycle type code. This ensures that all LPC devices present on the shared interface will ignore cycles destined for the FWH, without becoming “confused” by the different protocols.

When the FWH interface is active, information is transferred to and from the FWH by a series of “fields” where each field contains four bits of data. Many fields are one clock cycle in length but can be of variable length, depending on the nature of the field. Field sequences and contents are strictly defined for read and write operations.

5.13.4.1 FWH Cycles

A cycle is started on the rising edge of LCLK when LFRAME# is asserted and a valid cycle type is driven on LAD[3:0] by the host. Valid cycle types for the FWH are 1101 (read) and 1110 (write).

FWH Read Cycles: A read cycle is initiated by asserting 1101 on LAD[3:0] with LFRAME# low. All data transfers are valid on the rising edge of the LCLK. The cycle is illustrated in Figure 5-44 on page 152 and described in Table 5-27 on page 152.

FWH Write Cycles: A write cycle is initiated by asserting 1110 on LAD[3:0] with LFRAME# low. All data transfers are valid on the rising edge of the LCLK. The cycle is illustrated in Figure 5-45 on page 153 and described in Table 5-28 on page 153.

Abort Operation: LFRAME# (FWH4) active (low) indicates either that a Start cycle will eventually occur or that an abort is in progress. In either case, if LFRAME# (FWH4) is asserted, the Intel FWH will “immediately” TRI-STATE its outputs and the FWH state machine is reset.

During a write cycle, there is a possibility that an internal Flash write or erase operation is in progress (or has just been initiated). If LFRAME# (FWH4) is asserted during this frame, the internal operation will not abort. The software must send an explicit Flash command to terminate or Suspend the operation.

The internal FWH state machine will not initiate a Flash write or erase operation until it has received the last data nibble from the chip set. This means that LFRAME# (FWH4) can be asserted as late as this cycle (“cycle 12") and no internal Flash operation will be attempted. However, since the Intel FWH will start “processing” incoming data before it generates its SYNC field, it should be considered a non-buffered peripheral device.

Downloaded from Arrow.com.

Table 5-27. FWH Read Cycle

Signal	Clock Cycle	LAD[3:0]	Peripheral I/O	Description
START	1	1101	I	On the rising edge of CLK with LFRAME# low, the contents of LAD[3:0] indicate the start of an FWH cycle.
IDSEL	1	0000	I	Indicates which FWH peripheral is selected. The value on the LAD[3:0] is compared to the IDSEL strapping on the FWH device pins to select which device is being addressed. Note: From Intel *82802 Specification* - the boot device must have an ID (determined by ID strapping pins ID[3:0]) of 0. It is advisable that subsequent devices use incremental numbering.
ADDR	7	xxxx	I	A 28-bit address phase is transferred starting with the most significant nibble first.
MSIZE	1	0000	I	Always 0000 (single byte transfer).
TAR	1	1111	I	The LPC host drives LAD[3:0] to 1111 to indicate a turnaround cycle.
TAR	1	1111 (float)	O	The FWH device takes control of LAD[3:0] during this cycle.
WSYNC	2	0101	O	The FWH device drives LAD[3:0] to 0101 (short wait-sync) for two clock cycles, indicating that the data is not yet available.
RSYNC	1	0000	O	The FWH device drives LAD[3:0] to 0000, indicating that data will be available during the next clock cycle.
DATA	2	xxxx	O	Data transfer is two cycles, starting with least significant nibble.
TAR	1	1111	O	The FWH device drives LAD[3:0] to 1111, to indicate a turnaround cycle.
TAR	1	1111 (float)	N/A	The FWH device floats its output and the LPC host takes control of LAD[3:0].

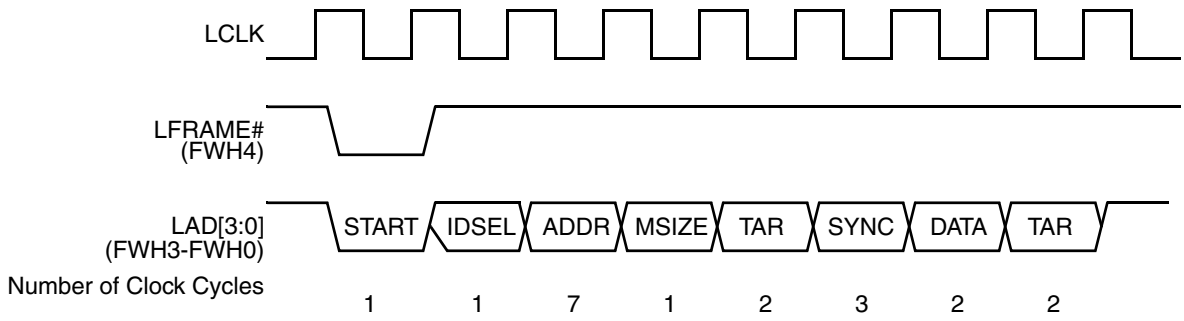

Figure 5-44. FWH Read Cycle

Downloaded from Arrow.com.

Table 5-28. FWH Write Cycle

Signal	Clock Cycle	LAD[3:0]	Peripheral I/O	Description
START	1	1110	I	On the rising edge of CLK with LFRAME# Low, the contents of LAD[3:0] indicate the start of an FWH cycle.
IDSEL	1	0000	I	Indicates which FWH peripheral is selected. The value on the LAD[3:0] is compared to the IDSEL strapping on the FWH device pins to select which device is being addressed. Note: From Intel(R) 82802 spec - the boot device must have an ID (determined by ID strapping Pins ID[3:0]) of 0. It is advisable that subsequent devices use incremental numbering.
ADDR	7	xxxx	I	A 28-bit address phase is transferred starting with the most significant nibble first.
MSIZE	1	0000	I	Always 0000 (single byte transfer).
DATA	2	xxxx	I	Data transfer is two cycles, starting with least significant nibble.
TAR	1	1111	I	The LPC host drives LAD[3:0] to 1111 to indicate a turnaround cycle.
TAR	1	1111 (float)	O	The FWH device takes control of LAD[3:0] during this cycle.
SYNC	1	0000	O	The FWH device drives LAD[3:0] to 0000 to indicate it has received data or a command.
TAR	1	1111	O	The FWH device drives LAD[3:0] to 1111, indicating a turnaround cycle.
TAR	1	1111 (float)	N/A	The FWH device floats its output and the LPC host takes control of LAD[3:0].

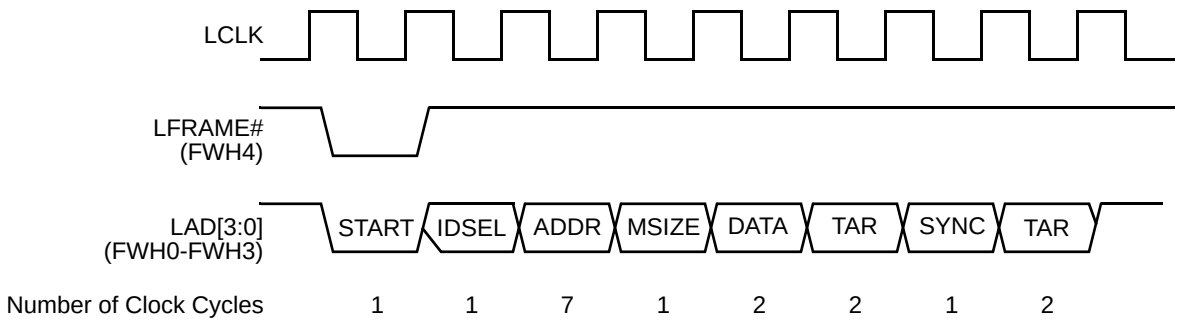

Figure 5-45. FWH Write Cycle

Downloaded from Arrow.com.

5.14 Real-Time Clock Features

The Real-Time Clock (RTC) consists of three main blocks: digital, analog, and level shifter (see Figure 5-46). The digital block contains the bus interface, RAM, voltage control, time generator, and the time keeper. The analog block contains the voltage switch and low power crystal oscillator. Finally, the level shifter block provides the appropriate voltage level translation of signals to and from the RTC block. Level shifters are needed because the RTC is powered by the V_{PP} (output of the analog section), which is different from the V_{CORE} and V_{CORE_VSB} power domains.

Features

- Accurate timekeeping and calendar management
- Alarm at a predetermined time and/or date
- Three programmable interrupt sources
- Valid timekeeping during power-down, by utilizing external battery backup
- 242 bytes of battery-backed RAM
- RAM lock schemes to protect its content
- Internal oscillator circuit (the crystal itself is off-chip), or external clock supply for the 32.768 KHz clock
- A century counter
- Additional low-power features such as:
  - Automatic switching from battery to V_{SB}
  - Internal power monitoring on the VRT bit
  - Oscillator disabling to save battery during storage
- Software compatible with the DS1287 and MC146818

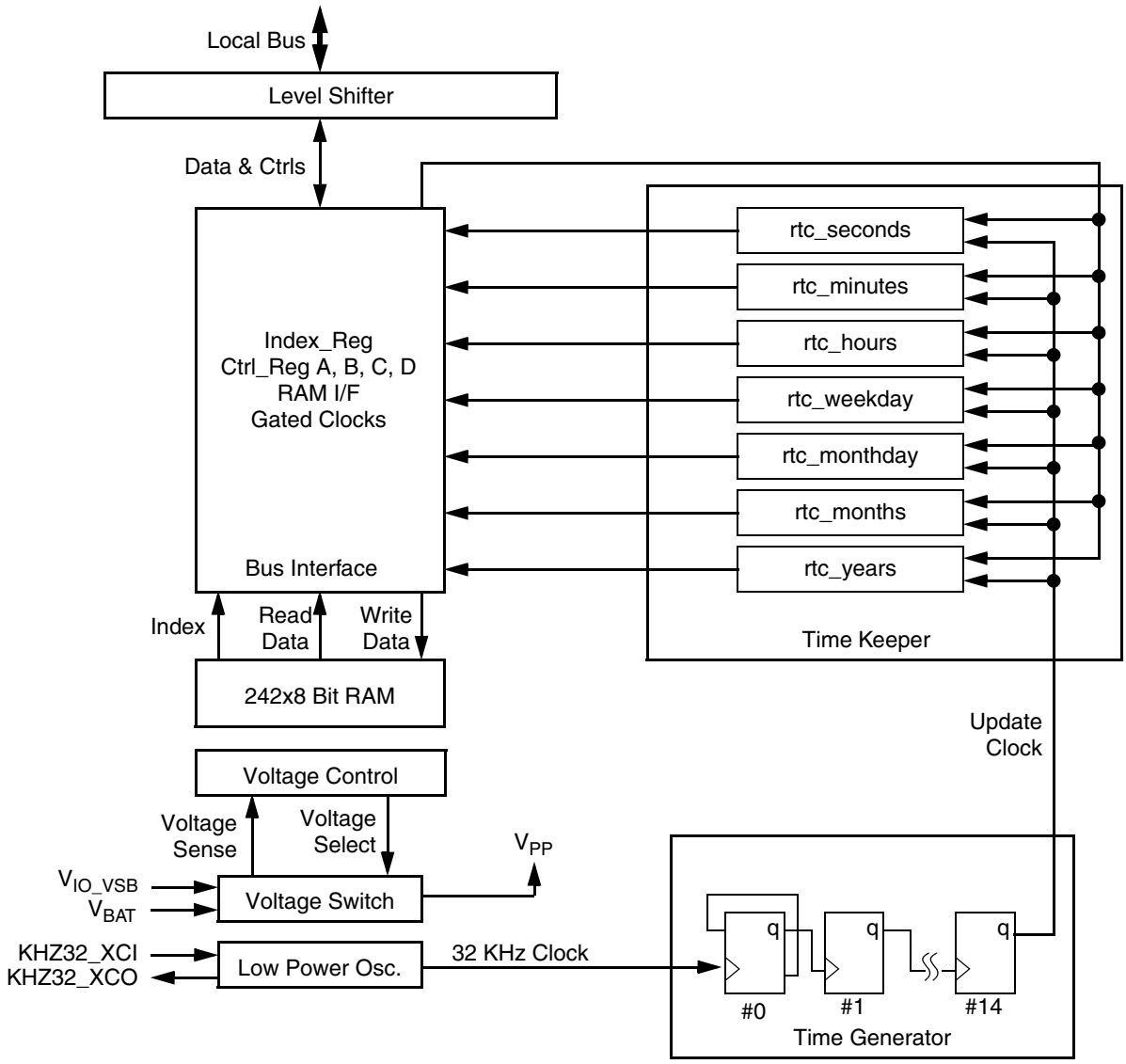

Figure 5-46. RTC Block Diagram

Downloaded from Arrow.com.

5.14.1 External Use Recommendations

It is recommended that the external components for the oscillator be connected as illustrated in Figure 5-47. The recommended specifications for those external components are listed in Table 5-29.

Capacitors C1, C2, and C3 should be chosen to match the crystal's load capacitance. The load capacitance C_L "seen" by the crystal Y is comprised of C1, C2, and C3 in parallel with the parasitic capacitance of the circuit. The parasitic capacitance is caused by the chip package, board layout, and socket (if any). The rule of thumb in choosing these capacitors is:

$$C_L = (C1 * C2)/(C1 + C2) + C3 + C_{PARASITIC}$$

To achieve high time accuracy, use crystal and capacitors with low tolerance and temperature coefficients.

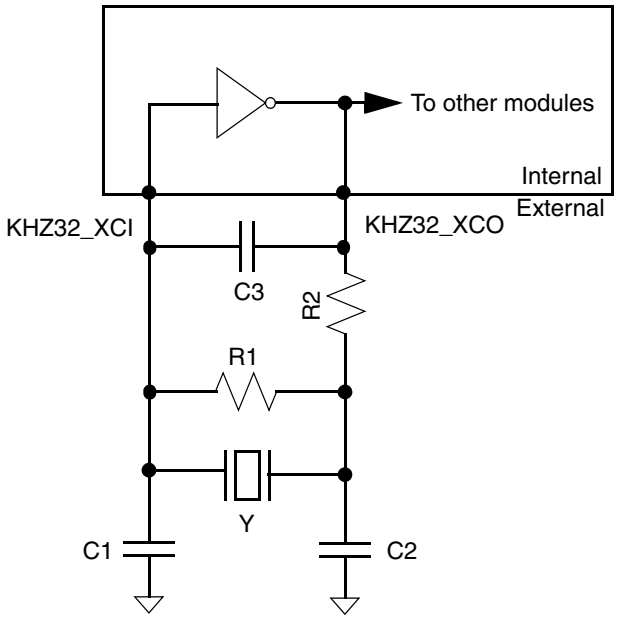

Figure 5-47. Recommended External Component Connections

Table 5-29. External Component Recommended Specifications

Component	Parameters	Values	Tolerance
Crystal	Resonance	32.768 KHz Parallel Mode	User-defined
	Type	N-Cut or XY-bar	
	Serial Resistance	35 kΩ	Max
	Q Factor	90K	Typ
	Shunt Capacitance	1.6 pF	Max
	Load Capacitance, C_L	12.5 pF	
	Capacitance Ratio	460	Typ
	Drive Level	1 μW	Max
	Temperature Coefficient	User-defined	
Resistor, R1	Resistor	10 MΩ	5%
Resistor, R2	Resistor	1 MΩ	5%
Capacitor, C1	Capacitor	22 pF	5%
Capacitor, C2	Capacitor	22 pF	5%
Capacitor, C3	Capacitor	1 pF	5%

Downloaded from Arrow.com.

5.15 General Purpose Input/Output

Proper use and understanding of the General Purpose Input/Output (GPIO) subsystem is the key to applying the AMD Geode™ CS5536 companion device in a custom system design. By totalizing the optional features of the CS5536 companion device GPIOs, system functions such as soft buttons, DDC monitoring, timers, system interrupts, etc. may be implemented. The system designer should pay careful attention to the suite of features available through the GPIO subsystem and, because the GPIOs are multiplexed with other on-chip functions, must make careful trade-offs to obtain the features desired in the system.

The register space for control of the GPIO subsystem contains space for control of 32 GPIOs. Since only 28 GPIOs are realized, the control bits for the non-existent GPIO[31:29], and GPIO[23] are marked “Reserved”. GPIO[22:16] are multiplexed with the LPC bus; therefore, if the system requires an LPC bus, GPIO[22:16] are not available as GPIOs. Likewise, GPIO[15:14] are multiplexed with the SMB (System Management Bus); if the system requires the SMB, GPIO[15:14] are dedicated to this function and not available as GPIOs. Other GPIOs are multiplexed with individual functions as indicated in Table 3-8 "GPIO Options" on page 47.

Features

- Input Features:
  - — Each of the available GPIOs may be configured as an input. A block of eight Input Conditioning Functions, providing edge detection, event counting, and input filtering, may be configured for use by any eight of the 28 GPIOs, though all 28 may have edge detection. The optionally-conditioned input may then be fed to steering logic that can connect it to an interrupt, or power-management input event (PME).
- Output Features:
  - — Each of the available 28 GPIOs has a configurable output cell. The output cell for each GPIO may be independently configured to provide a variety of interface options. The cell may be enabled or disabled, configured as a totem-pole or open-drain type, have internal pull-up or pull-down resistors applied, or be inverted.
  - — As indicated in Table 3-8 "GPIO Options" on page 47, the GPIOs have differing output driver types and reset defaults. When choosing a GPIO for a given function, choose one with a compatible output driver type, and one that the use of, does not make another desired function inaccessible. Careful study of this table will assist the system designer in making proper selections of the desired functionality of the suite of GPIOs.
- Auxiliary Functions
  - — Most of the 28 GPIOs have additional hard-wired internally-connected functions that may be selected by choosing either the AUX_1 or AUX_2 outputs. Use of these allows internal functions to be accessed at the device pins. Table 3-8 "GPIO Options" on page 47 identifies these auxiliary functions, including access to the UARTS and multi-function timers, as well as certain power-management controls.
- Output Mapping:
  - — After passing through the optional input conditioning circuits, any GPIO may be mapped (connected) to one of eight PIC-level interrupts, or to one of eight Power Management Event (PME) inputs. A given GPIO may not be simultaneously mapped to both an interrupt and a PME. The PIC interrupt inputs may be configured to cause the generation of an ASMI-type interrupt from any or all of the mapped GPIO signals.
- Power Domains:
  - — The GPIO circuits are distributed into the Working and Standby power domains. Those circuits in the Standby power domain may be used for system wakeup events, since they remain powered when the Working power is removed. As indicated in Table 3-8 "GPIO Options" on page 47, GPIO[28:24] are located in the Standby power domain; all others are in the Working power domain. Event/Filter pairs 6 and 7 are located in the Standby domain; pairs [5:0] are in the Working power domain.
- Auto-sense:
  - — GPIO5 and GPIO6 have a feature called Auto-sense. When reset is applied to the system, a weak internal pull-up is applied to the pad. When reset is de-asserted, the Auto-sense value is used to establish the pull-up/down state on the de-assertion edge. If nothing pulls down the pad, then the weak pull-up continues to be applied. If the pad is pulled down, then pull-up is set to “no” and pull-down is set to “yes”. The output driver does not actively drive the pad, that is, it remains in TRI-STATE mode. If an auto-sensed pull-down is desired, a diode between the reset signal and the GPIO pin pulls it down during the Auto-sense operation but has no effect during normal operation.
- Recommended Functions:
  - — System designers at AMD have created a list of recommended uses for selected GPIOs, see Table 3-8 "GPIO Options" on page 47. The desired functions were matched up with GPIOs by selecting appropriate buffer types and multiplexing options to create an optimal list of recommended uses for the GPIOs. Designers may use these recommended functions as a starting point and make modifications to the list as needed to fit the particulars of their system.

Downloaded from Arrow.com.

5.15.1 Programming for Recommended Functions

Table 3-8 "GPIO Options" on page 47 includes an “Recommended Use” column. Shown below are the register settings to achieve the example.

Example Use	Getting Example Use		Note
PCI_INTA_L	INPUT_ENABLE	= 1	
	Setup GPIO Interrupt Mapper		
AC_BEEP	OUT_ENABLE	= 1	
	OUT_AUX1_SELECT	= 1	
IDE_IRQ0	INPUT_ENABLE	= 1	
	IN_AUX1_SELECT	= 1	
DDC_SCL	OUT_ENABLE	= 1	Software write OUT_VALUE
DDC_SDA	OUT_ENABLE	= 1	Software write OUT_VALUE
MFGPT0	OUT_ENABLE	= 1	
	OUT_AUX1_SELECT	= 1	
MFGPT1	OUT_ENABLE	= 1	
	OUT_AUX1_SELECT	= 1	
PCI_INTB_L	INPUT_ENABLE	= 1	
	Setup GPIO Interrupt Mapper		
UART1_TX	OUT_ENABLE	= 1	
	OUT_AUX1_SELECT	= 1	
UART1_RX	INPUT_ENABLE	= 1	
	IN_AUX1_SELECT	= 1	
THRM_ALRM_L	INPUT_ENABLE	= 1	
	IN_AUX1_SELECT	= 1	
	INPUT_INVERT	= 1	
SLP_CLK_L	OUT_ENABLE	= 1	
	OUT_AUX1_SELECT	= 1	
GPIO IN	INPUT_ENABLE	= 1	Software read READ_BACK
GPIO IN	INPUT_ENABLE	= 1	Software read READ_BACK
SMB_CLK	INPUT_ENABLE	= 1	
	IN_AUX1_SELECT	= 1	
	OUT_AUX1_SELECT	= 1	
SMB_DATA	INPUT_ENABLE	= 1	
	IN_AUX1_SELECT	= 1	
	OUT_AUX1_SELECT	= 1	
LPC_AD0	Hardware default Table 3-6 "DIVIL_BALL_OPT (DIVIL MSR 51400015h)" on page 34		
LPC_AD1	Hardware default Table 3-6 "DIVIL_BALL_OPT (DIVIL MSR 51400015h)" on page 34		
LPC_AD2	Hardware default Table 3-6 "DIVIL_BALL_OPT (DIVIL MSR 51400015h)" on page 34		
LPC_AD3	Hardware default Table 3-6 "DIVIL_BALL_OPT (DIVIL MSR 51400015h)" on page 34		
LPC_DRQ_L	Hardware default Table 3-6 "DIVIL_BALL_OPT (DIVIL MSR 51400015h)" on page 34		
LPC_SERIRQ	Hardware default Table 3-6 "DIVIL_BALL_OPT (DIVIL MSR 51400015h)" on page 34		
LPC_FRAME_L	Hardware default Table 3-6 "DIVIL_BALL_OPT (DIVIL MSR 51400015h)" on page 34		
WORK_AUX	OUT_ENABLE	= 1	
	OUT_AUX1_SELECT	= 1	
LOW_BAT_L	INPUT_ENABLE	= 1	
	IN_AUX1_SELECT	= 1	
PME#	INPUT_ENABLE	= 1	
	Setup GPIO PME Mapper		
MFGPT7	OUT_ENABLE	= 1	
	OUT_AUX1_SELECT	= 1	
PWR_BUT_L	INPUT_ENABLE	= 1	
	IN_AUX1_SELECT	= 1	

Downloaded from Arrow.com.

5.15.2 Register Strategy

The register set for the GPIO subsystem has been arranged in such a way as to eliminate the need for read-modify-write operations. Individual GPIO control bits may be directly and immediately altered without requiring knowledge of any other GPIO states or bit settings. Previous systems required the current settings for all GPIOs to be read, selected pins changed, and the result written back. If this read-modify-write operation was interrupted by another process that also used the GPIOs, then erroneous operation could result.

To avoid the read-modify-write operation, two data bits are used to control each GPIO feature bit, wherein a feature is enabled or disabled. One register bit is used to establish a logic 1, while a second register bit is used to establish a logic 0. A 1 in a register bit changes the feature bit's value, while a 0 does nothing. Since there are two register bits for each GPIO feature bit, there are four combinations of register bits possible. The two control bits operate in an exclusive-OR pattern, as illustrated in Table 5-30.

Table 5-30. Effect on Feature Bit

Logic 0 Bit Position	Logic 1 Bit Position	Effect on Feature Bit
0	0	No change
1	0	Feature bit is cleared to 0
0	1	Feature bit is set to 1
1	1	No change

An example 16-bit register controlling a feature bit for eight GPIOs is illustrated in Table 5-31. Note that the real registers are 32 bits; 16 bits are used here as an illustrative example.

Assume that the register in Table 5-31 allows setting and clearing of an unspecified "feature bit" for GPIO[7:0]. Assume that the 16-bit value given in the example has just been written into the register. In this example, all four possible bit combinations fromTable 5-30 are examined.

GPIO5 has a 0 in the logic 0 bit position (register bit 13), and a 1 in the logic 1 bit position (register bit 5), so the GPIO5 feature bit would become a 1.

GPIO4 has a 1 in the logic 0 bit position (register bit 12), and a 0 in the logic 1 bit position (register bit 4), so the GPIO4 feature bit would become a 0.

GPIO7 has a 1 in both bit positions (register bits 15 and 7). Writing a 1 to both the logic 1 and logic 0 bit positions causes no change to the GPIO7 feature bit.

GPIO6 has a 0 in both bit positions (register bits 14 and 6). Writing a 0 to both the logic 1 and logic 0 bit positions causes no change to the GPIO6 control bit. GPIO[3:0], also have 0s in both bit positions, so they experience no change.

Reads produce a normal and an inverted value. For example, assume the Output Enable is set only for GPIO4 in the above register. A read would return the value EF10h.

Actual GPIO registers associated with feature bit settings are 32 bits wide and each handle 16 GPIOs. They are organized into low and high banks. The low bank deals with GPIO[15:0], while the high bank deals with GPIO[28:24] and GPIO[22:16].

In addition to these "bit registers", there are value registers for the Input Conditioning Functions.

5.15.3 Lock Bits

Many GPIO registers are protected against accidental changes by Lock Enable registers that prevent further changes. Once a LOCK bit is set, the associated register can not be changed until the corresponding LOCK bit is cleared. There are two Lock Bit registers, one for the high bank (GPIOH_LOCK_EN, GPIO I/O Offset BCh) and one for the low bank (GPIOH_LOCK_EN, GPIO I/O Offset 3Ch). All GPIO registers are protected by LOCK bits except the High and Low Bank Read Back registers, (GPIO[x]_READ_BACK), High and Low Bank Positive Edge Status registers (GPIO[x]POSEDGE_STS), the High Low Bank Negative Edge Status registers (GPIO[x]NEGEDGE_STS), and of course the Lock Enable registers themselves.

Table 5-31. 16-Bit GPIO Control Register Example

	"1" Sets Control Bit to 0								"1" Sets Control Bit to 1							
Bit No.	**15**	**14**	**13**	**12**	**11**	**10**	**9**	**8**	**7**	**6**	**5**	**4**	**3**	**2**	**1**	**0**
Value	1	0	0	1	0	0	0	0	1	0	1	0	0	0	0	0
GPIO #	7	6	5	4	3	2	1	0	7	6	5	4	3	2	1	0

Downloaded from Arrow.com.

5.15.4 GPIO Basic I/O Configuration

The General Purpose Input and Output (GPIO) Interface is illustrated in Figure 5-48. The figure represents one of twenty-eight GPIOs potentially available. Note the GPIOs [31:29] and [23] are non-existent. Table 3-8 "GPIO Options" on page 47 provides a complete list of features for each GPIO and should be consulted when configuring a system.

Each GPIO has basic configuration options used to set up the characteristics of the GPIO for either input or output. Each of the functions in the list below follows the GPIO register strategy outlined inSection 5.15.2 "Register Strategy" on page 158 unless otherwise noted. This strategy allows individual GPIOs to be modified without accidentally changing the characteristics of unrelated GPIOs, and without requiring 'read-modify-write' cycles. All values are active high.

- OUT_EN. When high, enables this GPIO/OUT_AUX for output. A pad may be configured for output, input, or both.
- IN_EN. Enables this GPIO/IN_AUX for input. A pad may be configured for input, output, or both.
- OUT_VAL. This will establish the value driven to the pad when it is selected as an Output, unless either OUT_AUX1 or OUT_AUX2 are selected. The value driven to the GPIO pad is subject to an optional inversion.
- OUT_INVRT_EN. When high, inverts the GPIO/OUT_AUX Output Value.
- IN_INVRT_EN. Inverts the signal applied to the ball, and presents the inverted value to all follow-up circuitry (i.e., input conditioning functions). Affects both GPIO and IN_AUX.
- OUT_OD_EN. Configures this GPIO/OUT_AUX for open-drain operation. When the output pad is to be driven low, the pad is driven low. When the output pad is to be driven high, the pad is allowed to float and is not driven.
- OUT_AUX1_SEL and OUT_AUX2_SEL. Selects an internal auxiliary source for the Output Value. Table 3-8 "GPIO Options" on page 47 identifies all the possible internal connections for these two auxiliary sources.
- IN_AUX1_SEL. Selects an internal destination other than the GPIO for the ball. Table 3-8 "GPIO Options" on page 47 lists all the functions that may be connected in this manner.
- Selecting both IN_AUX1 and OUT_AUX1 is only supported for GPIO14 and GPIO15. For all other GPIOs, this setting may result in undefined behavior.
- PU_EN. Applies a weak pull-up to the pad. The effect of this control is independent of all other settings except PD_EN. If PU_EN is set by software, PD_EN is automatically cleared. Affects both GPIO and IN_AUX.
- PD_EN. Applies a weak pull-down to the pad. The effect of this control is independent of all other settings except PU_EN. If PD_EN is set by software, PU_EN is automatically cleared. Affects both GPIO and IN_AUX.

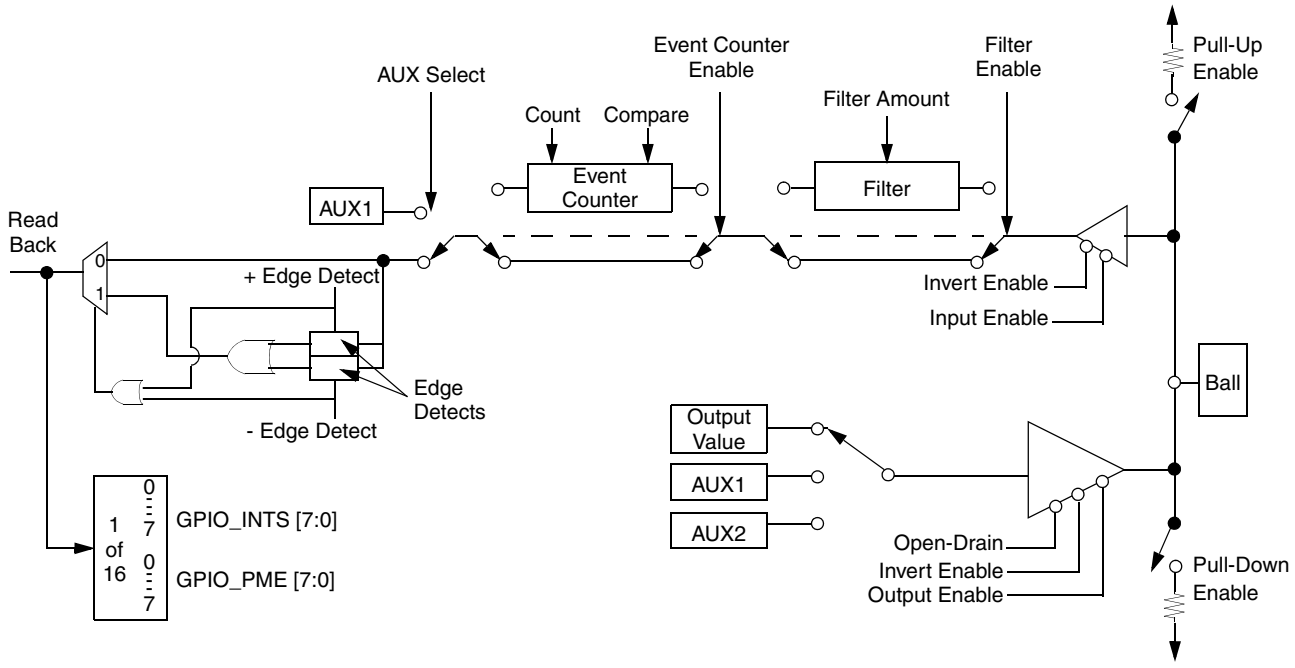

Figure 5-48. GPIO Configuration

Downloaded from Arrow.com.

5.15.5 Input Conditioning Functions

GPIOs in the CS5536 companion device may have their inputs conditioned by configurable circuitry as illustrated in Figure 5-48 on page 159. Any GPIO may be connected to one of eight Input Conditioning functions, each consisting of a Digital Filter and an Event Counter (known as an Event/Filter pair). Each GPIO is followed by an edge detection function that may be set for either positive or negative going edges. As shown in Figure 5-48, the edge detection function may be used to monitor the output of the Event/Filter pair that has been associated with that particular GPIO, or it may be used independently of the Event /Filter pair.

These functions are enabled as follows:

- IN_FLTR_EN. Enables the input filter function of the associated GPIO.
- EVNTCNT_EN. Enables the event counter function of the associated GPIO.
- IN_POSEDGE_EN and IN_NEGEDGE_EN. Enables the edge detection function and mode.

The final input value may be read back by a software accessible register (GPIO[x]_READ_BACK). It may also be used as an Interrupt or a Power Management Event.

There are a total of eight Digital Filter/Event Counter pairs that are shared by 28 GPIOs. There is a selection function to associate a given Filter/Counter pair with a given GPIO. All GPIOs incorporate edge detection.

5.15.5.1 Input Filter Conditioning Function

The digital filter is one-half of a Filter/Event conditioning circuit. (The other half is the Event Counter.) The filter is used to produce a stable output from an unstable input. Mechanical switch de-bounce is a typical use.

To use one of the eight digital filters, it must first be assigned to one of the GPIO inputs using one of the GPIO_FE[x]_SEL registers (GPIO I/O Offsets F0h-F7h); where “x” is the number of the Filter/Event pair, 0 to 7. Then the filter function must be enabled through either the GPIOL_IN_FLTR_EN (GPIO I/O Offset 28h) or the GPIOH_IN_FLTR_EN (GPIO I/O Offset A8h) registers, depending on whether the selected GPIO is in the high [28:16] or low [15:0] bank. Finally, a GPIO_FLTR[x]_AMNT (GPIO I/O Offsets 50h, 58h, 60h, 68h, 70h, 78h, D0h, and D8h) must be determined and then programmed to establish the filter’s stability period.

The associated GPIO input must ultimately remain stable for a FLTR_AMNT number of 32 KHz clock edges in order for the output to change. A FLTR_AMNT of 0 effectively disables the filtering function, because the counter will not roll over from 0 to all 1s. The maximum FLTR_AMNT is FFFFh.

The digital filter is based on a 16-bit programmable down-counter. An initial count is loaded into the counter via the GPIO_FLTR[x]_AMNT register. When the associated GPIO input changes, the counter begins counting down from FLTR[x]_AMNT towards 0. If the associated GPIO input remains stable for the length of the count-down period, then the counter reaches 0 and produces an output pulse to whatever the GPIO is internally connected to. If the associated GPIO input changes during the count-down period, then the counter reloads the initial count from the GPIO_FLTR[x]_AMNT register and begins counting down towards 0 again.

Direct access to the counter’s state is provided by the R/W register GPIO_FLTR[x]_CNT, which may be read at any time to determine the current value of the counter. The GPIO_FLTR[x]_CNT register may also be written to at any time, thereby jamming the counter state forward or backward from the current count.

Reads and writes of the GPIO_FLTR[x]_CNT register are internally synchronized to avoid false read values and corrupted writes, that is, reads and writes may occur to a filter circuit without concern of the phasing or timing of the 32 KHz clock edges. When GPIO[x]_IN_FLTR_EN is low, the filter circuit is not clocked.

The filter circuit is used to produce a stable output from an unstable input. Mechanical switch de-bounce is a typical use. The default value for all flip-flops, the Down Counter, and the Filter Amount Register is zero. Software establishes the filter amount. As long as the preliminary input on the left matches the filtered input on the right, the circuit is stable and the counter continuously loads the filter amount value. When the preliminary input changes, the counter begins to count. If the input remains steady, then the counter reaches zero and enables loading the value flip-flop. This brings the circuit back to the stable point. If the input does not remain steady, then the counter reloads. The preliminary input on the left must remain steady for the “filter amount” number of clock edges for the final input on the right to change. A filter amount of zero effectively disables the filtering function because the Down Counter will not roll over backwards to all ones. The maximum filter amount is FFFFh

Downloaded from Arrow.com.

5.15.5.2 Input Event Counter Conditioning Function

The event counter is one half of a filter/event conditioning circuit, and is in series with its associated filter. (The other half is the digital filter.) It counts events and can produce an output when a predefined count is reached. The event counter may be down-counted by writing to a particular address. It may be used as a rate counter that may be periodically read, and that produces no output at all.

To use one of the eight event counters, it must first be assigned to one of the GPIO inputs using one of the GPIO_FE[x]_SEL registers (GPIO I/O Offset F0h-F7h) (where X is the number of the Filter/Event pair, 0 to 7). Then the associated digital filter must be enabled, through either the GPIOL_IN_FLTR_EN or GPIOH_IN_FLTR_EN registers (I/O Offset 28h and A8h), depending on whether the selected GPIO is in the high [28:16] or low [15:0] bank. If digital filtering is not required, program the associated GPIO_FLTR[x]_AMNT registers to 0000h. Finally, the desired "compare value" (GPIO_EVNTCNT[x] _COMPARE) must be determined and then programmed to establish the number of events that will produce an output when that count has been reached.

The event counter is based on a 16-bit programmable up/down counter. The up-down counter counts positive edges of the selected GPIO input and produces a constant or level output when the GPIO_EVNTCNT[x] (counter value) exceeds the GPIO_EVNTCNT[x]_COMPARE (compare value). The output can be read as the GPIO and/or used to drive an auxiliary input.

The counter may be counted down one count by writing to one of two addresses, depending on which bank (High or Low) the associated GPIO resides in. Knowledge of which GPIO is associated with the event counter is required, since these two decrementer registers have a dedicated bit for each GPIO. When counted down, this counter, unlike the counter in the digital filter, rolls over from 0000h to FFFFh. Typically, decrementing is used to clear an interrupt or power management event as part of the associated service routine.

5.15.5.3 Uses of the Event Counter

Such an auxiliary input could be used to drive an ASMI or maskable interrupt. Assume the compare value is set to 0. The service routine clears the ASMI by decrementing the counter via the mechanism illustrated. If additional events have occurred, the count does not decrement to 0 and the ASMI remains asserted. The count up and down inputs are synchronized such that false values are not created if up and down pulses occur at or near the same instant in time. The counter will not decrement through 0.

Alternatively, the compare value could be set to a higher value to trigger an ASMI or interrupt when a certain number of events has occurred. In this case, the ASMI or interrupt is cleared by writing the counter to 0.

Lastly, the input value may be ignored and the event counter used as a rate indicator. If software reads the counter at a fixed periodic interval, an input pulse rate may be measured. Such an approach may be used to implement a tachometer function. The counter will increment past all Fs back to 0.

As suggested above, the counter may be read or written under software control. The read and write operations are synchronized such that false values are not created if count up pulses occur at or near the same instant in time.

5.15.5.4 Input Edge Conditioning Function

The Edge Detection function is illustrated as part of Figure 5-48 on page 159. It is normally used to generate an ASMI or maskable interrupt on each positive and/or negative edge of an input signal. Use of this function simultaneously with the event counter function is somewhat logically mutually exclusive, but is not prevented in hardware.

Each GPIO has the optional edge detection function.

The reset default for the detection circuit establishes a 0 level on GPIO[x]_POSEDGE_EN and GPIO[x]_NEGEDGE_EN (GPIO I/O Offset C0h and C4h). When both are set to 0, the edge detection function is disabled. If either a positive or negative edge detection is enabled, an active high output is produced when the appropriate edge occurs. This level must be cleared by writing to either the GPIO[x]_POSEDGE_STS or the GPIO[x]NEGEDGE_STS registers (GPIO I/O Offset C8h and CCh), whichever is appropriate. If another edge occurs before clearing, the active high output is not affected. If the clear action occurs at the "same time" as another edge, the result is not defined.

Each edge detection function is controlled by four registers as follows:

- Positive Edge Enable (GPIO[x]_POSEDGE_EN). Enabled if feature bit is high.
- Negative Edge Enable (GPIO[x]_NEGEDGE_EN). Enabled if feature bit is high.
- Positive Edge Status (GPIO[x]_POSEDGE_STS). Set indicates edge. Write 1 to clear.
- Negative Edge Status (GPIO[x]_POSEDGE_STS). Set indicates edge. Write 1 to clear.

Downloaded from Arrow.com.

5.15.5.5 Output Steering (Mapping)

Outputs from the internal GPIO circuits, driven by inputs to the CS5536 companion device from the system, may be steered (or 'mapped') to either interrupts, or power management events (PME). Sufficient steering logic exists in the CS5536 companion device to provide for eight independent interrupts and simultaneously for eight independent PMEs.

The eight GPIO interrupts are all in the Working power domain; of the eight PMEs, [7:6] are in Standby power domain and [5:0] are in Working domain. Those in the Standby power domain are intended to be used to awaken the system when the Working power domain is off, however, they may also be used when the Working power domain is on. The interrupts are connected to the PIC, and the PMEs are connected to the PMC.

Four 32-bit steering registers control the routing of the GPIOs' internal output (that produced by an input to the chip from an external source, or from one of the internally-connected AUX inputs) to either an interrupt or PME. The set of four registers taken together, contain a nibble for each GPIO. The upper bit of each nibble selects either a PME (if high) or an interrupt (if low). The remaining three bits of each nibble select which of the eight possible interrupts or PMEs the GPIO will be steered to.

The four registers are identified as GPIO Mapper X, Y, Z, and W. Their GPIO associations are as follows:

- GPIO_MAP_X = GPIO[7:0]
- GPIO_MAP_Y = GPIO[15:8]
- GPIO_MAP_Z = GPIO[23:16]
- GPIO_MAP_W = GPIO[31:24]

The steering logic does not prohibit mapping of two or more GPIOs to the same output, but it is impossible to create a single GPIO that functions simultaneously as both an interrupt and a PME. Registers X, Y, Z, and W default to all 0s, as do both the High and Low EVNT_EN registers. Thus, all GPIOs are mapped to INT[0] after a reset, but none are enabled.

5.15.5.6 Auto-sense

Two GPIOs (GPIO5 and GPIO6) have a function called "Auto-sense". Auto-sense is a method of automatically determining whether or not to apply a pull-up or pull-down to the corresponding GPIO input.

Auto-sensed inputs behave as follows. When reset is applied to the system, a weak pull-up is applied to the pad. When reset is de-asserted, the sensed value is used to establish the pull-up/down state on the de-assertion edge. If nothing pulls down the pad, then the pull-up continues to be applied. If the pad is pulled down, then the pull-up is cleared to 0 and the pull-down is set to 1. If a pull-down is desired, a diode between the reset signal and the GPIO pin will pull it down during the Auto-sense operation but have no effect during normal operation.

Disabling the auto-sensed pull-up or pull-down requires more program operation than just disabling the pull-up or pull-down through the GPIOL_PU_EN or GPIOL_PD_EN. If the pull-up was enabled through auto-sense, the procedure to disable is:

1) Enable the pull-down in GPIOL_PD_EN.
2) Disable the pull-down in GPIOL_PD_EN.

If the pull-down was enabled through auto-sense, the procedure to disable is:

1) Enable the pull-up in GPIOL_PU_EN.
2) Disable the pull-up in GPIOL_PU_EN.

Downloaded from Arrow.com.

5.16 Multi-Function General Purpose Timer

The Multi-Function General Purpose Timer contains eight multi-function general purpose timers (MFGPTs). Six of the eight MFGPTs are in the Working power domain running off a 32 KHz clock or a 14.318 MHz clock, while the other two are in the Standby power domain running off a 32 KHz clock.

The Working power domain contains the following blocks:

- Six MFGPTs each split into three blocks, one containing I/O registers, one containing the clock switch, and one containing the timer logic.
- 15-bit prescaler to divide down the 14.318 MHz clock and generate 15 carry-out signals.
- 15-bit prescaler to divide down the 32 KHz clock and generate 15 carry-out signals.
- Logic to implement Local Bus Interface, Control Logic, MSR Registers, and NMI, IRQ, and Reset Output Events.
- Two blocks containing I/O registers to write into the two MFGPTs in the Standby power domain.

The Standby power domain contains the following blocks:

- Two MFGPTs.
- 15-bit prescaler to divide down the 32 KHz clock and generate 15 carry-out signals.
- Interface for signals going between Standby and Working power domains.

Figure 5-49 shows the top level block diagram of the Multi-Function General Purpose Timer.

Features

Each MFGPT operates independently and can have the following features:

- 32 KHz or 14.318 MHz clock selectable by software (MFGPT0 to MFGPT5 only; MFGPT6 and MFGPT7 use 32 KHz clock).
- Programmable input clock prescaler divisor to divide input clock by 2^i, where i = 0 to 15.
- Watchdog timer (trigger GPIO output, interrupt, or reset).
- Pulse Width Modulation (PWM).
- Pulse Density Modulation (PDM).
- Blink (low frequency pulse for LED).
- General Purpose Timer.
- Generate GPIO outputs.
- Provide outputs for generating reset (limited to MFGPT0 to MFGPT5), IRQs, NMI, and ASMI (indirectly through PIC).

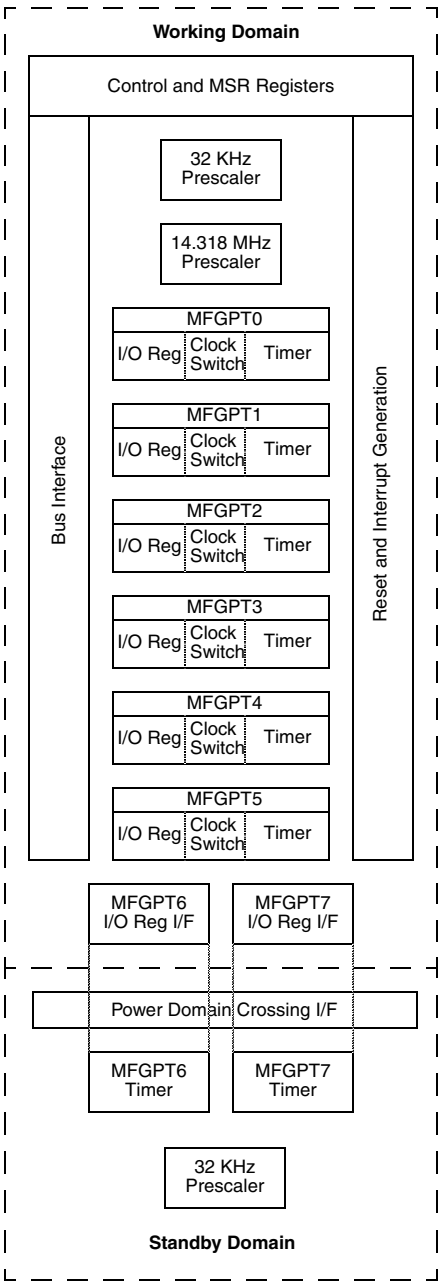

Figure 5-49. MFGPT Top Level Block Diagram

Downloaded from Arrow.com.

5.16.1 Prescaler

The 15-bit prescaler is a binary down counter, dividing down the incoming clock, and provides 15 outputs for the MFGPTs. The frequency of these outputs ranges from 2^{-1} to 2^{-15} of the input frequency and each pulse is one incoming clock high, so these outputs function as increment enables for the MFGPTs. The prescaler resets to 0000_{16} and starts decrementing after reset. The prescaler output vector, psclr_out[14:0], is based on prescaler counter psclr_cnt[14:0], where psclr_out[i] = &(~psclr_cnt[i:0]) (i.e., prescaler output bit i is asserted if the prescaler counter from bit i down to bit 0 are all low). When the prescaler reaches 0000_{16}, all prescaler outputs are asserted at that time.

The external clock for the prescaler is activated if there is one or more MFGPTs activated using it as the clock source. It is also activated for MFGPT I/O register writes and synchronous counter reads (only for 14.318 MHz) when the MFGPT being written has already selected the 14.318 MHz clock as its clock source. Whenever the external clock is activated, the prescaler counts. Therefore, multiple MFGPTs and register access can affect the prescaler counting. From the point of view of the MFGPT, once the MFGPT is disabled and then re-enabled, it cannot be determined exactly when the prescaler carry-out occurs as it does not know how long the prescaler has been stopped, if at all.

5.16.2 I/O Register Block

The I/O register write data is first stored in I/O register submodules before being transferred over to the MFGPTs. There are two types of I/O register submodules, one for the Working power domain and one for the Standby power domain. The main difference is that for the Working power domain, except for the counter register, the register values here and the register values in the timer are the same. For the Standby power domain, the register values in the I/O register sub-module cannot be relied upon except during write, as this logic could have been powered down in Standby mode and the register data is therefore invalid. For the Standby power domain, the read always comes from the timer directly.

5.16.2.1 MFGPT Register Set

There are four software accessible I/O registers per MFGPT: Up Counter, Comparator 1 Value, Comparator 2 Value, and Setup registers. (See Section 6.17 "Multi-Function General Purpose Timer Register Descriptions" on page 513 for register details.) Writes to these registers are first stored here and then transferred to a separate copy of the register in the timer. For MFGPT0 to MFGPT5, reads of these registers, except for the counter, comes from the registers here, while reads of the counter register comes from the timer. For MFGPT6 and MFGPT7, reads of these registers comes from the copy inside the timer.

5.16.2.2 Setup Register

The Setup Register contains the following control fields that control the MFGPT operation:

- **Counter Enable.** Enables the Up Counter to count (it does not enable/disable other MFGPT functions).
- **Clock Select.** Instructs the clock switch logic to use the 32 KHz clock as the MFGPT clock if low or the 14.318 MHz clock if high, once this register has been written (only for MFGPT0 to MFGPT5).
- **Scale Factor.** Selects the prescaler divide scale factor for the Up Counter to increment.
- **Stop Enable.** Enables the Up Counter to stop counting during a system power management Sleep mode (for MFGPT0 to MFGPT5) or Standby mode (for MFGPT6 and MFGPT7).
- **External Enable.** Enables the Up Counter to be cleared and restarted rather than performing the next increment each time there is a low to high transition detected on the GPIO input associated with the timer. An asynchronous edge-detector catches the transition; the signal is then synchronized and sent to clear the counter synchronously. Therefore, the clear does not occur immediately on the transition.
- **Reverse Enable.** Flips the order of the Up Counter outputs going to the Compare 1 circuit so that bit 0 becomes bit 15, bit 1 becomes bit 14, etc. This allows the timer logic to generate a PDM signal instead of a PWM signal. To properly generate a PDM signal, the Compare 2 Value should be set to $FFFF_{16}$ to allow the Compare 1 Value to establish the density.
- **Compare 1 Mode.** Controls the Compare 1 output. There are four cases:

  00: Disabled. Output is low.

  01: Compare on Equal. The compare output goes high when the Up Counter value, after going through Bit Reverse logic, is the same value as the Compare 1 Value.

  10: Compare on GE. The compare output goes high when the Up Counter value, after going through Bit Reverse logic, is greater than or equal to the Compare 1 Value.

  11: Event. Same as “Compare on GE”, but an event is also created. This event can be read and cleared via the MFGPT Setup Register and is used to generate interrupt and reset.
- **Compare 2 Mode.** Same as Compare 1 Mode, except this controls the Compare 2 output. The Up Counter is directly compared against the Compare 2 Value (i.e., without going through Bit Reverse logic).

All of the above fields, except Count Enable, are write once only.

Downloaded from Arrow.com.

Compare Status/Event Bits

The Setup register also contains two status bits: one from Compare 1 and one from Compare 2. If Event mode is selected, then these two status bits represent the events from the two Compare circuits, and writing a 1 to one of the bits clears that particular event. If Event mode is not selected, then the status bits read back the compare outputs, and writing to those bits has no effect. Note that since this logic is in the Working power domain, MFGPT6 and MFGPT7 loses these events when V_{CORE} is powered off. In order for events to be captured again, the chip must have V_{CORE} powered up out of Standby mode and then come out of reset.

The Compare 1 and Compare 2 outputs may change simultaneously on the same MFGPT clock edge. However, when checking the outputs through the two status bits after this occurred, on rare occasions, the read may find only one of the two outputs changed to the new value. This could occur when the two outputs change at about the same time they are synchronized by separate synchronizers to the local bus clock domain, and one synchronizer captured the new value in time, while the other one does not. A subsequent read can show that both outputs did change states.

5.16.2.3 Register Initialization Sequence for Event Mode

If the Setup register is written before the other three I/O registers, and if Event mode is selected for Compare 1 mode or Compare 2 mode, then events are triggered immediately. This is because the compare outputs look for a Compare register value greater than or equal to the counter, and the result will be true as those registers are all 0. To avoid triggering these events on Setup register initialization, first initialize the Compare 1 Value and Compare 2 Value registers before initializing the Setup register.

5.16.2.4 Register Data Transfer to/from MFGPT

Only WORD writes and DWORD writes are accepted for I/O register accesses; BYTE writes to I/O registers are ignored. The DWORD write causes the two I/O registers located within the DWORD boundaries to be written in parallel. If Up Counter, Compare 1 Value, or Compare 2 Value registers are written while the MFGPT is running, it could cause the compare outputs to change in the middle of a prescaler period (i.e., not at a clock cycle where the prescaler signals a counter increment). For MFGPT0 to MFGPT5, the clock switch circuitry disables all clocks to the MFGPT until the Setup register has been written. Therefore, even if the Up Counter, Compare 1 Value, and/or Compare 2 Value registers are written before the Setup register, these register values are transferred to the timer at the same time as the Setup register values.

All reads and writes to MFGPT registers can be done by software at any time, and are completed without requiring any additional software operation, and without affecting the proper operation of the MFGPT as long as a clock to the MFGPT has been selected by writing to the Setup register.

On a write, the write transfer on the bus is considered complete when the write to the register in the I/O register submodule is complete. This occurs before the register data is transferred to the timer. However, a subsequent read or write to the same register will be held up until that first write transfer to the timer is complete.

The Setup register, except for bits 13 and 14, are handled in the same way as the Compare 1 Value and Compare 2 Value registers. Bits 13 and 14 write and read were discussed earlier, where the entire logic is in the Working power domain.

5.16.2.5 Register Re-initialization

If it is necessary to re-initialize the Up Counter, Compare 1 Value, or Compare 2 Value, the following sequence should be followed to prevent any spurious reset, interrupt, or output pulses from being created:

1) Clear Counter Enable bit to 0.
2) Clear Interrupt Enable, NMI Enable, and Reset Enable bits in MSRs; disable GPIO inputs and outputs.
3) Update Up Counter, Compare 1 Value, and Compare 2 Value registers as desired.
4) When updates are completed, clear any event bits that are set.
5) Set up Interrupt Enable, NMI Enable, and Reset Enable bits in MSRs; enable desired GPIO inputs and outputs.
6) Set Counter Enable bit to 1.

5.16.3 Clock Switch

The clock switch output is disabled at reset and selection can only be done one time after reset, at the first write to the Setup register.

Restriction on Register Read/Write Sequence Due to Clock Switch

Note that because the timer clock is stopped until the first write to the Setup register, a write to one of the other three I/O registers during this time could not complete its transfer to the timer. As a result, a second access, read or write, to the same register causes the bus interface to hang, as the second access waits for the first access (the initial write) to complete before completing its own operation. But since the first access cannot complete without a clock, the second access is in limbo. This means no more accesses can occur, so there is no way to write to the Setup register to enable the timer clock. Care should be taken to see that this situation does not occur.

Downloaded from Arrow.com.

5.16.4 Single MFGPT

Figure 5-50 shows the functionality of one of these timers. There are two types of timers, one for the Working power domain and one for the Standby power domain.

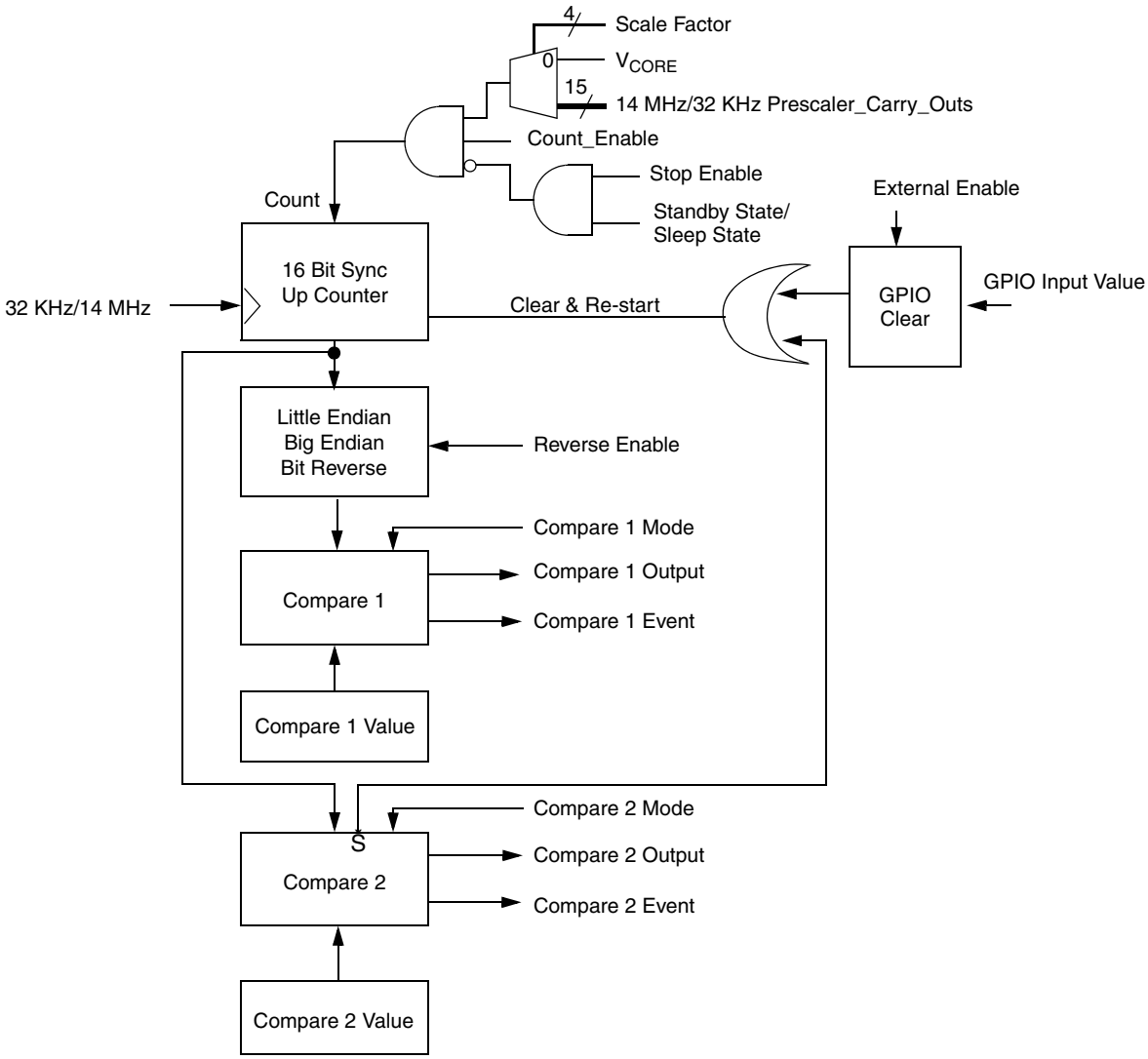

Figure 5-50. MFGPT Block Diagram

Downloaded from Arrow.com.

5.16.4.1 Clock Selection and Counter Increment

The MFGPT can use either the 32 KHz clock or 14.318 MHz clock as the clock source (MFGPT6 and MFGPT7 in Standby power domain are limited to the 32 KHz clock). When the Counter Enable bit is high, the MFGPT is activated and capable of counting. An actual increment is performed when the selected prescaler divide-by signals the increment; this is done through the Scale Factor selecting one of 16 signals. Table 5-32 shows how the Scale Factor effectively divides down the incoming clock.

Table 5-32. MFGPT Prescaler Clock Divider

Scale Factor	Input Clock Divide-By
0000	1
0001	2
0010	4
0011	8
0100	16
0101	32
0110	64
0111	128
1000	256
1001	512
1010	1024
1011	2048
1100	4096
1101	8192
1110	16384
1111	32768

5.16.4.2 Compare 1 and Compare 2 Outputs

When the Up Counter reaches the Compare 1 Value, the Compare 1 Output is asserted. When the Compare 2 Value is reached, the Compare 2 Output is asserted, and the Up Counter then synchronously clears and restarts. The MFGPT outputs coming from Compare 1 and Compare 2 are all glitch-free outputs.

The compare outputs and events may change in the middle of a prescaler period if new values are written to the Up Counter, Compare 1 Value, or Compare 2 Value registers. These compare outputs can be used to trigger their respective events and drive GPIO outputs. The events are used to trigger interrupts, NMI, and reset.

5.16.4.3 GPIO Input

The Up Counter could also be software selected to have a GPIO input positive edge as another source for the counter to clear and restart. The GPIO input signal is asynchronous to the timer and the timer uses a flip-flop to capture the GPIO rising edge. It takes up to one prescaler clock period plus two MFGPT clock periods from the GPIO rising edge for the clear to take effect. Once the counter is cleared, this edge detect circuit can then accept a new GPIO edge. Each individual pulse can be as short as a few nanoseconds wide for the rising edge to be captured. If this feature is not selected or the counter is disabled, the clear counter output and the edge detector are kept de-asserted.

5.16.4.4 Bit Reverse and Pulse Density Modulation

Figure 5-51 shows how the Little Endian/Big Endian Bit Reverse functions.

Table 5-33 on page 168 shows a 3-bit example of pulse density modulation; note that the MFGPT has a 16-bit implementation. If the desired pulse train is of the opposite polarity, this can be inverted in the GPIO or generated with a different Compare 1 value.

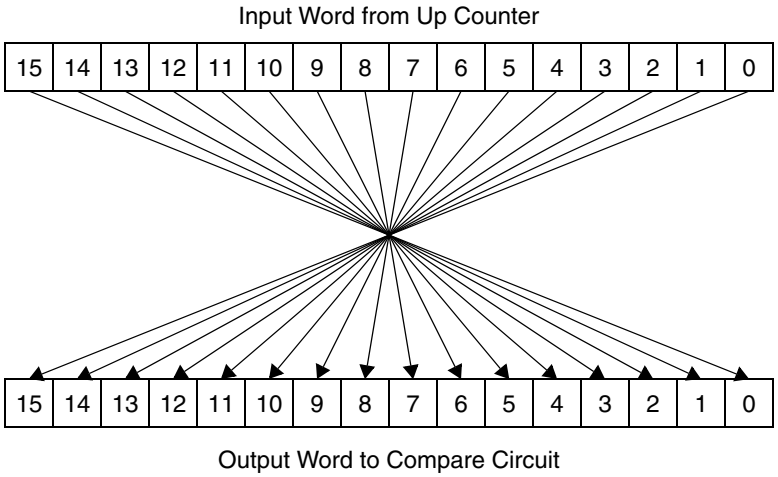

Figure 5-51. MFGPT Bit Reverse Logic

Downloaded from Arrow.com.

Table 5-33. MFGPT Pulse Density Modulation Example

Up Counter Output	Bit Reverse Output	Pulse Train Output for Given Compare 1 Value (Note 1)				
		1	2	4	5	6
000	000	0	0	0	0	0
001	100	1	1	1	0	0
010	010	1	1	0	0	0
011	110	1	1	1	1	1
100	001	1	0	0	0	0
101	101	1	1	1	1	0
110	011	1	1	0	0	0
111	111	1	1	1	1	1

Note 1. Compare 2 Value must be set to all 1s for pulse density modulation.

5.16.5 Working Power Domain Logic

The Working power domain logic consists of the Local Bus Interface, Control Logic, MSRs, and NMI, IRQ, and Reset Output Events.

When Event mode is enabled, the NMI, IRQ, and Reset Output Events logic gathers the event outputs of all eight MFGPTs and then generates the interrupt and resets outputs based on MSR settings. The interrupt outputs go to the PIC that can then trigger an IRQ or ASMI. Note that MFGPT6 and MFGPT7 cannot trigger reset. These outputs are controlled by MSR bits, and the NMI output can be further controlled by the MSB of I/O Address 070h.

5.16.6 Power Domain Crossing Interface Logic

The asynchronous internal Standby State signal disables/enables the Working power domain interface immediately. Therefore, any bus operation active at that time has an indeterminate result.

Downloaded from Arrow.com.

5.17 Power Management Control

The Power Management Control (PMC) controls all aspects of power management. Power management is event driven, meaning that in general, any action that the PMC performs is predicated on some event. These events can come from other GeodeLink Devices, including the CPU inside the AMD Geode LX processor for example, or events coming from other off-chip sources.

The PMC is compatible with the industry standard power management capabilities as defined in the *Advanced Configuration and Power Interface (ACPI) v2.0 specification*. An operating system that conforms to ACPI can take advantage of the CS5536 companion device ACPI support hardware.

Advanced Power Management (APM) is another power management approach that the PMC supports. APM is a subset of ACPI and therefore is not directly discussed.

Components in a GeodeLink architecture based system have hardware and software means of performing power management, which the PMC controls. A high performance computing system consumes multiple watts of power when fully on. However, with GeodeLink architecture, system power consumption is significantly lower on average through the use of power states that reduce power needs when the system is idle.

5.17.1 Power Domains

The PMC consists of three blocks: Working, Standby and RTC.

- The Working block contains all circuits and functions associated with the Working power domain. It includes the Working state machine, Local bus interface, ACPI power management registers, and power management supporting logic (i.e., counters, timer, CCU, etc.). The main function of the Working block is to put the system into Sleep, that is, turn off clocks to the system and disable I/Os to reduce power consumption.
- The Standby block contains all circuits and functions associated with the Standby power domain. It includes the Standby state machine, ACPI registers, and power management supporting logic (i.e., counters, reset, CCU, etc.). The function of the Standby logic is to control power to the Working power domain. The PMC disables all interfaces between the Standby and Working domains while the Working power is off.
- The RTC block contains the timing circuits for keeping real time. These circuits are powered by V_{BAT} (ball A3). It is not a device requirement that the RTC block be powered during Mechanical Off. If a system design does not require that real time be kept, then V_{BAT} should be tied to ground.

5.17.2 Power States

Table 5-34 shows the supported ACPI power states and how they relate to the AMD Geode LX/CS55336 system. ACPI power states not described are not supported.

Table 5-34. Supported ACPI Power Management States

ACPI States			Hardware States			
					AMD Geode™ CS5536 Companion Device	
Global System State	Sleep State	C State	AMD Geode™ LX Processor State	System Main Memory	Working Logic	Standby Logic
G0: Working	S0	C0	FO	FO	FO	On
			AHCG	AHCG	AHCG	
		C1	Suspend on Halt	AHCG	AHCG	
G1: Idle	S1: Sleeping	C2	Sleep	Auto-refresh	Sleep	On (Sleep)
	S3: Save-to-RAM	Off	Off	Auto-refresh	Off	Standby
	S4: Save-to-Disk	Off	Off	Off	Off	
G2: Soft Off	S5	Off	Off	Off	Off	Standby
G3: Mechanical Off	Off	Off	Off	Off	Off	Off

Downloaded from Arrow.com.

5.17.2.1 ACPI System Power States

- **G0/S0:** Not Sleeping. Software is executing code or could be halted waiting for a system event.
- **G1/S1:** Requires explicit software action to enter this state. All AMD Geode LX processor, CS5536 companion device, and main memory states maintained. All system clocks may be turned off except 32 KHz or selected additional clocks may be left on as required. The PMC provides generic controls, SLEEP_X and SLEEP_Y, that may be used to control the “D” states of external system devices (not described in this data book, see ACPI specification for details). Two additional internal signals control PCI and IDE input and outputs. A wakeup event brings the system back to the opcode following the one that initiated entry into S1. Context restore operation is not required on the AMD Geode LX processor, CS5536 companion device, or main memory.
- **G1/S3:** Save-to-RAM state. Requires explicit software action to enter this state. The CS5536 companion device and other system context are lost. System state is saved in the main memory. To properly support this state, main memory power must be controlled by WORKING power while the AMD Geode LX processor, CS5536 companion device, and all other system components power must be controlled by WORK_AUX power. Note that this applies only to the Working domain of the CS5536 companion device. The Standby domain must be continuously supplied from Standby power.
- **G1/S4:** Suspend-to-Disk state. Requires explicit software action to enter this state. Same as S3 state, but the system state is “saved” on the hard drive or other mass storage device. Only Standby power is on while in this state.
- **G2/S5:** Requires explicit software action to enter this state. All system context is lost and not saved. Operating system re-boot is required. The 32 KHz clock is kept running for Standby PMC and selected GPIO and MFGPT circuits.
- **G3:** Software action is not required to enter this state. Working power and Standby power are removed. The only domain that may be powered is the RTC. It is not a requirement that the RTC be powered.

5.17.2.2 CPU Power States

- **G0/S0/C0:** Processor actively executing instructions and clock running. Cache snoops supported.
- **G0/S0/C1:** HLT instruction executed. Usually occurs in the Operating System’s idle loop. Operating System waiting for Power Management Event (PME), interrupt, or ASMI. Cache snoops are supported while in this state, so bus mastering activity can safely occur.
- **G1/S1/C2:** Processor is in the lowest power state that maintains context in a software invisible fashion. Entered as part of the S1 sequence. The SUSP#/SUSPA# signaling protocol indicates entry. SUSP# is not an explicit external signal, it is part of the CIS packet. (See Section 5.2.14 "CPU Interface Serial (CIS)" on page 86 for further details.) No explicit software action required. However, this state can be entered by explicit software action by reading the ACPI P_VL2 register provided by the AMD Geode LX processor’s GLCP.

5.17.2.3 Hardware Power States

- **FO (Full On):** From a hardware reset, all clocks come up Full On or always running. Generally, the system should not be left in this state. The AHCG state should be used.
- **AHCG (Active Hardware Clock Gating):** This is the desired mode of operation; it utilizes automatic hardware clock gating. Latency to turn on a clock is near 0. This hardware state should be established at system initialization by BIOS code; after initialization it needs no additional support. AHCG is invisible to the Operating System, ACPI, or other software based power management facilities.
- **Suspend on Halt:** See CPU power state G0/S0/C1.
- **Sleep:** See CPU power state G1/S1/C2.
- **Auto-refresh:** The memory controller issues an auto-refresh command to the DRAMs. In this state, the DRAMs perform refresh cycles on their own without any additional commands or activity from the memory controller or the interface. As long as power to the DRAMs is maintained, the memory contents are retained.

5.17.2.4 PMC Control

Under S3, S4, and S5 power management states, all Working domain circuits, as well as the AMD Geode LX processor, are turned off to conserve power. Under S3, the system memory is powered by V_{IO_VSB} in Standby Auto-refresh mode but otherwise, all other system components are also turned off.

The PMC is used to establish overall system power states. Normally, the Standby domain voltages are present anytime the system is plugged into the wall; if portable, anytime the battery is plugged in. Generally, G3 Mechanical Off (see Table 5-34 on page 169) only applies during storage or maintenance. Therefore, operationally speaking, the PMC Standby controller is always available to manage power. There is a class of system designs that do not require G1 and G2 global power states. These systems usually power-up WORKING and STANDBY power domains simultaneously when power is applied.

For supporting Save-to-RAM (G1/S3) the WORKING output is used to switch off/on the Working domain sources for system memory while the WORK_AUX output is used to switch off/on the Working domain sources for everything else. Thus, the PMC can completely control the system power states via these outputs.

Downloaded from Arrow.com.

5.17.3 Software Power Management Actions

The hardware comes up from hardware system reset in the Full On (FO) state. As part of system initialization, the power management MSRs (see Section 6.18.1 on page 526) are written to establish the Active Hardware Clock Gating (AHCG) state. The AHCG state is the nominal operational state.

5.17.3.1 Sleep/Standby Sequence

Entering the states under G1 and G2 requires explicit software action. That action starts a hardware chain of events in which some of the chain is determined by registers that must be programmed previous to the start of the sequence. The block diagram of the hardware involved in this sequence is illustrated in Figure 5-52. Figure 5-53 and Figure 5-54 graphically show the Sleep/Standby sequence. The sequence is as follows:

1) The “explicit software action” begins with a write to PM1_CNT (ACPI I/O Offset 08h) starting the Sleep/Standby sequence.
2) The PMC issues a Sleep Request to the CS5536 companion device’s GLCP and it passes the request as SUSP# to the AMD Geode LX processor’s GLCP.
3) The AMD Geode LX processor’s GLCP issues a suspend request to the processor. After the processor has shutdown operation, it provides a suspend acknowledge back to the Geode LX processor’s GLCP.
4) The AMD Geode LX processor’s GLCP processes a sleep sequence similar to that described in step 5, while issuing a SUSPA# to the CS5536 companion device’s GLCP.

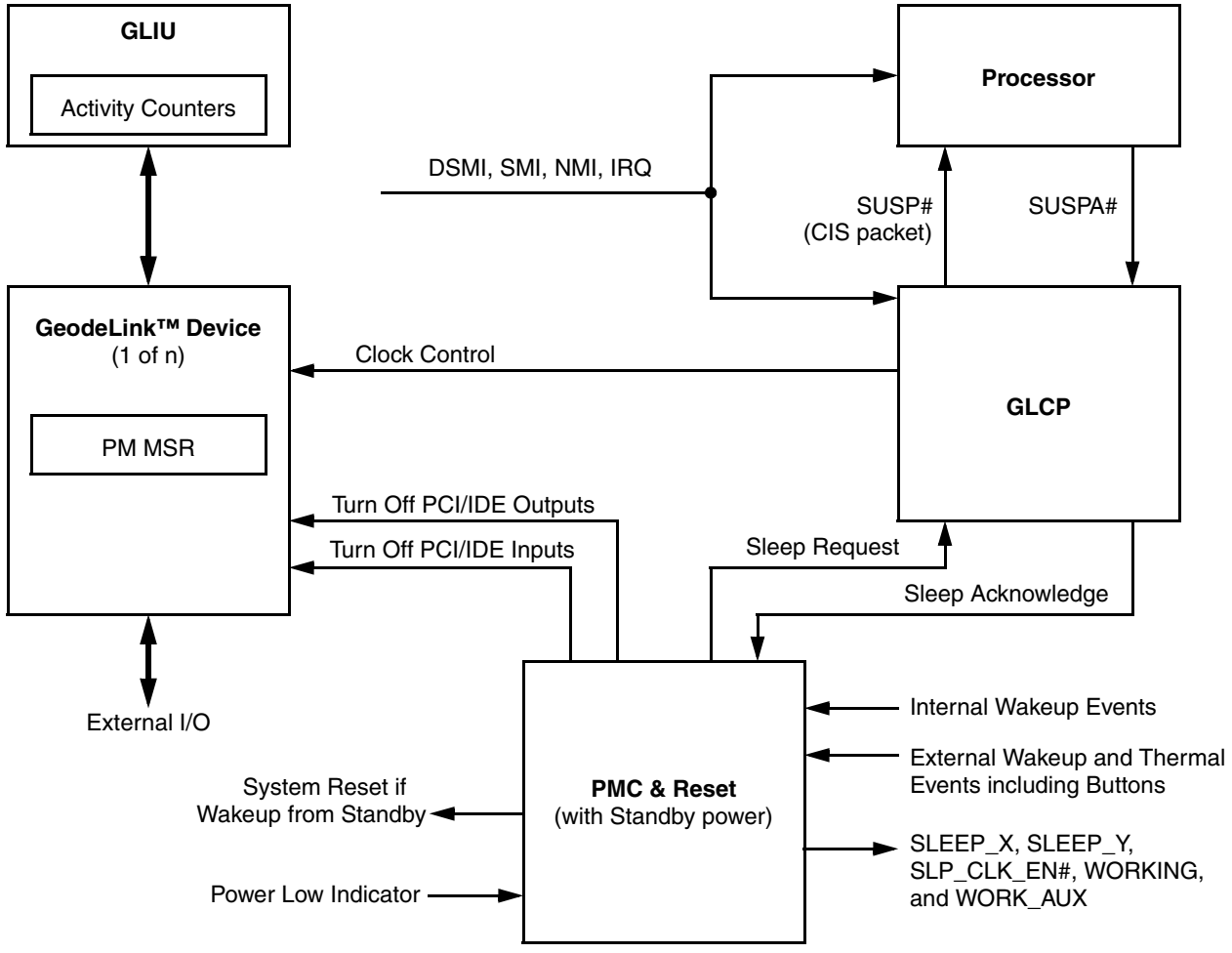

Notes: *At least one per GeodeLink™ Device.
#Global signal, one per system.

Figure 5-52. PMC Power Management Elements

Downloaded from Arrow.com.

5) The CS5536 companion device's GLCP processes a Sleep sequence. This is done in one of the three ways:

   a) If the CLK_DLY_EN bit in GLCP_GLB_PM (MSR 5170000Bh[1]) is 0 and the CLK_DELAY value in the GLCP_CLK_DIS_DELAY (MSR 51700008h[23:0]) is 0, then wait until the CLK_ACTIVE flags specified in GLCP_CLK4ACK (MSR 51700013h[43:0]) have gone to 0.

   b) If the CLK_DLY_EN bit is 1 and the CLK_DELAY value is non-zero, then wait the amount of time of the CLK_DELAY value.

   c) If the CLK_DLY_EN is 0 and the CLK_DELAY value is non-zero, then wait as in (a) but no longer than (b).

6) At the completion of the wait above, de-assert the CLK_DIS bits specified in GLCP_PMCLKDISABLE (MSR 51700009h[45:0]) and assert Sleep Acknowledge to the PMC.

7) When the Sleep Acknowledge is received, the PMC can optionally issue additional external generic controls SLEEP_X and SLEEP_Y as well as SLP_CLK# to turn off external clocks. The completion of this step takes the system to S1. The system is now in Sleep.

8) If the Sleep Request was to enter S3 (Save-to-RAM) then the PMC moves beyond S1 and removes main power by de-asserting WORK_AUX and leaving WORKING asserted. WORKING is used to power main memory, while WORK_AUX is used for everything else in the system.

9) If the Sleep Request was to enter S4 (Save-to-Disk) or S5 (Soft Off), then the PMC moves beyond S1 and removes main power by de-asserting both WORK_AUX and WORKING.

10) An external or internal wakeup event reverses the events above to bring the system back to the S0 state.

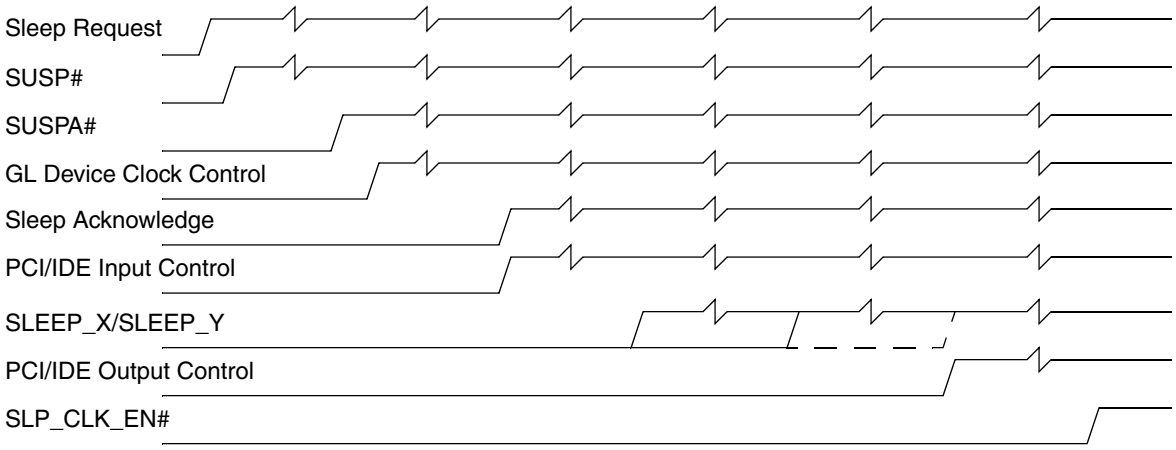

Indicates a variable delay.

SLP_CLK_EN# signal must be the last control to assert because it turns off all system clocks.

Note: External signals are not necessarily active high. Shown as active high for clarity.

Figure 5-53. PMC System Sleep Sequence

Downloaded from Arrow.com.

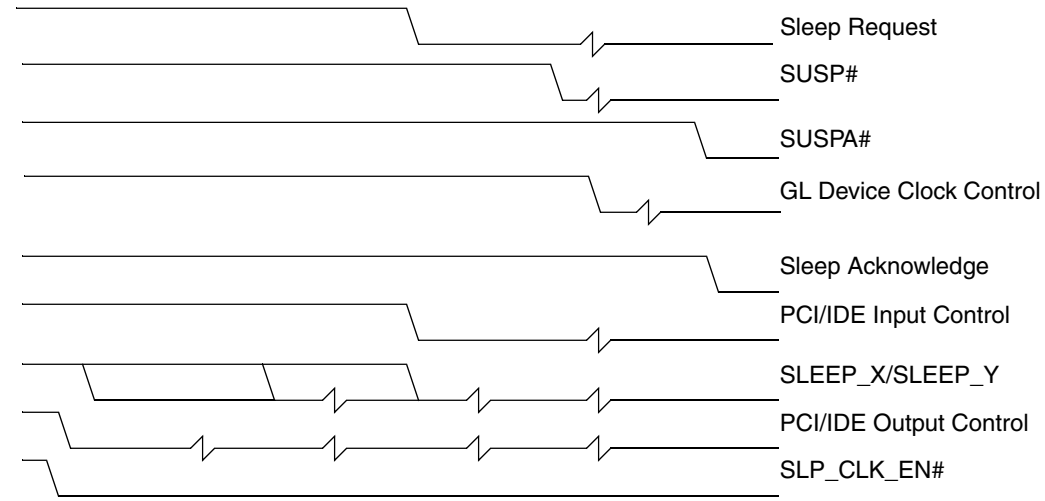

Indicates a variable delay.

SLP_CLK_EN# de-asserts at wakeup event and turns on system clocks.

SLEEP_X/SLEEP_Y Controls should de-assert between PCI/IDE input and output controls.

Wakeup sequence begins with a Sleep wakeup event.

Note: External signals are not necessarily active high. Shown as active high for clarity.

Figure 5-54. PMC System Wakeup Sequence

5.17.3.2 Sleep Controls

The Sleep Request/Sleep Acknowledge handshake (see Figure 5-52 on page 171) between the GLCP and PMC controls the transitions into and out of the Sleep and Standby states. The PMC starts the Sleep sequence by asserting Sleep Request to the GLCP. The GLCP requests the processor to enter C2 by asserting the SUSP# signal. When SUSPA# from the processor is received, the GLCP informs the internal GeodeLink Devices of a pending shutdown and waits until the GeodeLink Devices' clock control indicates that they are ready. The length of time it takes for each device to respond is programmable (GLCP MSR 51700008h, 51700013h, and 5170000Bh). After all designated GeodeLink Devices have responded, the GLCP asserts Sleep Acknowledge to the PMC.

The PM_IN_SLPCTL (PMS I/O Offset 20h) register and the PM_OUT_SLPCTL (PMS I/O Offset 0Ch) are used to disable PCI/IDE inputs and outputs respectively during Sleep. Generally, they are asserted at the end of a Sleep sequence and de-asserted at the beginning of a Wakeup sequence. When "disabled", some of the outputs are forced to TRI-STATE with an active internal pull-down resistor while the rest are simply pulled low. See Section 4.7.5 "MSR Address 4: Power Management" on page 78 for specific details on PCI/IDE I/O controls during Sleep.

5.17.3.3 Power Controls

In response to Sleep Acknowledge from the GLCP, the PMC can assert five controls/enables: SLEEP_X, SLEEP_Y, SLP_CLK_EN#, WORKING, and WORK_AUX. These can control external electronic power switches and enables. Each control's assertion and de-assertion is subject to an enable and a programmable delay (PMS I/O Offset 04h to 3Ch).

Controls SLEEP_X and SLEEP_Y are generic and have no specific use. Asserting control SLP_CLK_EN# is assumed to turn off the system (board) clocks. It is always de-asserted by the wakeup event. The following conditions apply to the timing of selected output control (see Section 5.17.3.2 "Sleep Controls"), SLEEP_X, SLEEP_Y and SLP_CLK_EN#.

When going to sleep:

a) If not enabled, SLEEP_X and SLEEP_Y do not assert at all. If they are enabled, the delay should be set to occur between the delays programmed in the PM_IN_SLPCTL and PM_OUT_SLPCTL registers (PMS I/O Offset 20h and 0Ch respectively).

b) If SLP_CLK_EN# is enabled, any delays associated with the PM_OUT_SLPCTL, SLEEP_X, and SLEEP_Y registers must be less than the SLP_CLK_EN# delay.

Downloaded from Arrow.com.

c) If SLP_CLK_EN# is enabled, then Sleep wakeup is possible only after SLP_CLK_EN# asserts.

d) If SLP_CLK_EN# is not enabled, and if at least one of the following PM_OUT_SLPCTL, SLEEP_X, or SLEEP_Y registers is enabled, then Sleep wakeup is possible only after the longest delay of the three. The delays could be zero.

e) If SLP_CLK_EN# is not enabled, and the PM_OUT_SLPCTL, SLEEP_X, or SLEEP_Y registers are not enabled, then Sleep wakeup is possible immediately.

f) If SLP_CLK_EN# is enabled and the delay associated with the PM_OUT_SLPCTL register is longer than or equal to the delay associated with SLP_CLK_EN#, then the PCI/IDE outputs are not disabled.

If enabled, the de-assertion of WORKING is assumed to remove Working power and all clock sources except 32 KHz; that is, the Standby state is entered. In this state, the PMC disables its interface to all circuits connected to Working power and asserts RESET_OUT# before de-assertion of WORKING. RESET_OUT# remains asserted throughout Standby.

WORK_AUX is an auxiliary control for the Standby state with no specific use. It can be de-asserted any time before or after WORKING.

WORKING and WORK_AUX are independent controls, but the use of either implies that the Standby state is to be entered. In both cases, the PMC disables all circuits connected to Working power and asserts reset. However, since they are independent, one may be left on while the other is de-asserted.

5.17.3.4 Wakeup Events

If the system has been put to Sleep, only preprogrammed wakeup events can get the system running again. The PMC contains the controls that allow the system to respond to the selected wakeup events.

On wakeup from Sleep (not Standby, but Sleep Wakeup) (see Figure 5-52 on page 171), the PMC immediately de-asserts SLP_CLK_EN# to turn system clocks back on. It also re-enables PCI/IDE outputs to allow output drivers to return to their operational levels. Next it de-asserts SLEEP_X and SLEEP_Y based on programmable delays. Alternate SLEEP_X and SLEEP_Y interactions are shown as dotted lines. Lastly, the PMC, re-enables PCI/IDE inputs after a programmable delay and de-asserts Sleep Request. The GLCP starts any on-chip PLLs and waits for them to become stable. Then the GLCP de-asserts SUSP# to the processor. When the processor de-asserts SUSPA#, the GLCP de-asserts Sleep Acknowledge. The PMC allows the wakeup event to assert a System Control Interrupt (SCI).

After a wakeup event:

a) PCI/IDE outputs are re-enabled after SLP_CLK_EN# is de-asserted.

b) PCI/IDE inputs are re-enabled at Sleep wakeup or after a programmable delay. Generally, PCI/IDE inputs are normally used with a delay and that delay is longer than any de-assertion delay associated with SLEEP_X and/or SLEEP_Y. Re-enabling PCI/IDE inputs is generally not useful at the beginning of a wakeup sequence.

c) Sleep Request is de-asserted at Sleep wakeup or after a programmable delay. Sleep Request is kept de-asserted until the PCI/IDE inputs are re-enabled. Generally, the enable and delay values in PM_SED (PMS I/O Offset 14h) and PM_IN_SLPCTL (PMS I/O Offset 20h) should always be the same.

d) If used, SLEEP_X/SLEEP_Y delay should be set to occur between the delays programmed in PM_OUT_SLPCTL and PM_IN_SLPCTL (PMS I/O Offset 0Ch and 20h respectively). If the delays for SLEEP_X/SLEEP_Y are longer than the PM_IN_SLPCTL delay, then SLEEP_X/SLEEP_Y de-assert at the same time as the PCI/IDE inputs are re-enabled.

On wakeup from Standby (not Sleep, but Standby Wakeup) the PMC asserts WORKING and performs a system reset. RESET_OUT# is de-asserted after a programmable delay and the normal software start-up sequence begins. However, early in the sequence, the software checks the PMC state to determine if waking from Standby (PMS I/O Offset 54h[0]). If yes, then the system state is potentially restored from non-volatile storage.

If enabled, WORK_AUX may be asserted before or after RESET_OUT# is de-asserted.

5.17.3.5 Fail-Safe Power Off

The PMC provides the support logic to implement an ACPI compliant fail-safe power off button. This logic unconditionally de-asserts the WORKING and WORK_AUX signals if the On/Off button is held down for a programmable delay. For ACPI compliance, this delay should be set to four seconds.

5.17.3.6 Wake Events Status and SCI

When enabled, a wake event from the general wake events register (see Section 6.16.4 "GPIO Interrupt and PME Registers" on page 509) sets its status bit and the WAK_STS bit and causes a system control interrupt (SCI). The Sleep button, RTC alarm, and power button when asserted, always set their status bit. They set the WAK_STS bit and generate an SCI only when their enable bit is set. When overflowed, the PM timer sets its status bit. This overflow condition does not cause a wakeup event but if enabled, it generates an SCI. The event's status is cleared by writing a one to it.

Downloaded from Arrow.com.

5.17.4 PMC Power Management States

The PMC state machines support the fundamental hardware states: Power Off, Reset Standby, Working, Sleep, and Controlled Standby.

- **Reset Standby State:** From Power Off, reset is applied to the Standby domain by the external input pin RESET_STAND#. Once reset, the Reset Standby state de-asserts WORKING and WORK_AUX outputs and waits for a Reset Standby wakeup event.
- **Working State:** The Working state can be entered from Reset Standby, Sleep, or Controlled Standby states. Working state is established when Working power is applied and all system clocks are enabled. Once in this state, registers and functions in the PMC can be initialized, programmed, enabled/disabled, and the potential exists for the system to proceed to the Sleep state or Standby state.
- **Sleep State:** The system initiates the entry to the Sleep state with a Sleep sequence. Under the Sleep state, Working and Standby power are maintained. PCI/IDE inputs are disabled when Sleep Acknowledge asserts. PCI/IDE outputs are disabled when Sleep Acknowledge asserts or after a programmable delay. SLEEP_X, SLEEP_Y, and SLP_CLK_EN# may be asserted if enabled. A Sleep wakeup event returns the system to Working state.
- **Controlled Standby State:** Can be entered “normally”, “fault condition”, or by a “restart”.

A normal entry is by way of a system initiated sequence as in the Sleep case. This method of entry requires the Standby state machine to monitor SLP_CLK_EN# and look for an enable of the “Working De-assert Delay and Enable” register (PM_WKD, PMS I/O Offset 30h[30]) or the Work_aux De-assert Delay and Enable register (PM_WKXD, PMS I/O Offset 34h[30]). This signals the Controlled Standby state normal entry. A Standby wakeup event returns the system to Working state after a programmable delay (PM_NWKD, PMS I/O Offset 4Ch).

If enabled, a faulted entry can be initiated by a low power off, thermal off, or fail-safe off. It can also be initiated by Working power fail asserted. A default wakeup event returns the system to the Working state after a programmable delay (PM_AWKD, PMS I/O Offset 50h).

A re-start can be initiated by any of these resets: GLCP soft reset, soft reset, shutdown reset, watchdog reset, or bad packet type reset. The system returns to the Working state when reset is de-asserted and the abnormal work delay (PM_AWKD) expired. WORKING and WORK_AUX are not de-asserted.

When a Controlled Standby state is entered by a faulted condition or restart event, software control is assumed lost and the software established state is assumed to be potentially wrong. Therefore, the Standby domain returns to the state associated with “Standby State Entry from Power Off”; that is, Standby domain reset defaults are used. The only exceptions are registers from the following list; these are locked and not subject to change by software:

PM_RD	De-assert Reset Delay from Standby (PMS I/O Offset 38h)
PM_WKXA	WORK_AUX Assert Delay from Standby (PMS I/O Offset 3Ch)
PM_FSD	Fail-Safe Delay and Enable (PMS I/O Offset 40h)
PM_TSD	Thermal Safe Delay and Enable (PMS I/O Offset 44h)
PM_PSD	Power Safe Delay and Enable (PMS I/O Offset 48h)
PM_NWKD	Normal to Work Delay and Enable (PMS I/O Offset 4Ch)
PM_AWKD	Abnormal Work Delay and Enable (PMS I/O Offset 50h)

The Abnormal Work Delay and Enable (PM_AWKD) register is the only one of the above registers that potentially applies during a re-start entry.

Lastly, note that any normal entry operation in process is aborted.

Wakeup from faulted entry is the same as that associated with Standby State Entry from Power Off; that is, it acts as if the power button has been pushed. Other possible wakeup events such as RTC Alarm and PMEs are ignored. However, the system can be held in the Standby state for the following reasons:

1) If enabled and locked, LOW_BAT# is still asserted.
2) If LVD_EN# is tied to ground and V_{CORE} is not at a valid voltage, or if RESET_WORK # is asserted.

Note: If enabled and locked, the thermal alarm does not keep the system in the Standby state if it is asserted. The thermal alarm circuitry resides in the Working domain, and its state is ignored by the Standby state. Once out of Standby, the thermal alarm again comes into play. If it is still asserted, its timer would start again.

The Power Management Control (PMC) has two state machines:

- **Working State Machine:** Operates under Working power and runs on a 14 MHz clock from the CCU. Its function is to generate control signals used to turn off/on systems clocks and I/Os based on events coming from on or off the chip.
- **Standby State Machine:** Operates under Standby power and runs on the 32 KHz clock. Its function is to power-up and down the Working power to the Working domain based on events coming from on or off the chip.

Downloaded from Arrow.com.

5.17.5 PMC Power Management Events

A large number of inputs to the PMC are used to monitor and create system power managements events. Some of these inputs apply the Working state machine while the remainder apply to the Standby state machine.

5.17.5.1 PM Sleep Events

- Sleep:
  - — Sleep sequence initiated by software
- Wakeup:
  - — Assertion of the Sleep Button (SLEEP_BUT)
  - — Assertion of the Power Button (PWR_BUT#)
  - — RTC alarm
  - — Working power domain PMEs
  - — Standby power domain PMEs

5.17.5.2 PM Standby Events

- Standby:
  - — Sleep sequence initiated by software
  - — LVD detection of low voltage on V_{CORE} (system fault)
  - — Assertion of the Power Button for 4 seconds (PWR_BUT#, system fault)
  - — Thermal Alarm (THRM_ALRM#, system fault)
  - — Low battery (LOW_BAT#, system fault)
  - — Hardware reset (system restart)
  - — Software initiated reset (system restart)
  - — Shutdown initiated reset, CPU triple fault (system restart)
  - — Watchdog initiated reset (system restart)
  - — GLCP software initiated reset (system restart)
  - — Bad packet type reset (system restart)
  - — Reset Standby state machine RESET_STAND# (Standby)
- Wakeup:
  - — Assertion of the Power Button (PWR_BUT#)
  - — RTC Alarm
  - — Standby power domain PMEs

Note: While the system is in the Standby state and THRM_ALRM# or LOW_BAT# are asserted, wakeup events (e.g., assertion of PWR_BTN#) are recognized (i.e., the associated status flags are set (e.g., PWRBTN_FLAG in PM1_STS)), but do not cause the system to exit from the Standby state due to THRM_ALRM# or LOW_BAT# being asserted. When THRM_ALRM# and LOW_BAT# are de-asserted wakeup event flags can cause the system to exit the Standby state when accordingly enabled.

Table 5-35 provides a complete list of the power management inputs and describes their function. The system can only be in one of three states: Working, Sleep, or Standby. The activity of the inputs is to move the system from one state to another.

Table 5-35. PM Events and Functions

Event	Current State	Function
The following events are Sleep and/or Standby wakeup events (except for ACPI Timer).		
PWR_BTN# (also serves as a Standby event)	Working	Sets the status bit (PWRBTN_FLAG) in PM1_STS (ACPI I/O Offset 00h[8] = 1). If PWRBTN_EN is enabled (ACPI I/O Offset 02h[8] = 1), an SCI is generated.
	Sleep	Sets the status bit (PWRBTN_FLAG) in PM1_STS (ACPI I/O Offset 00h[8] = 1). If PWRBTN_EN is enabled (ACPI I/O Offset 02h[8] = 1), SCI generation and wakeup from this event is enabled (i.e., sets the WAK_STS bit, ACPI I/O Offset 00h[15] = 1).
	Standby	Sets the status bit (PWRBTN_FLAG) in PM1_STS (ACPI I/O Offset 00h[8] = 1). If PWRBTN_EN is enabled (ACPI I/O Offset 02h[8] = 1), SCI generation and wakeup from this event is enabled (i.e., sets the WAK_STS bit, ACPI I/O Offset 00h[15] = 1).
SLP_BTN	Working	Sets the status bit (SLPBTN_FLAG) in PM1_STS (ACPI I/O Offset 00h[9] = 1). If SLPBTN_EN is enabled (ACPI I/O Offset 02h[9] = 1), an SCI is generated.
	Sleep	Sets the status bit (SLPBTN_FLAG) in PM1_STS (ACPI I/O Offset 00h[9] = 1). If SLPBTN_EN is enabled (ACPI I/O Offset 02h[9] = 1), SCI generation and wakeup from this event is enabled (i.e., sets the WAK_STS bit, ACPI I/O Offset 00h[15] = 1).

Downloaded from Arrow.com.

Table 5-35. PM Events and Functions (Continued)

Event	Current State	Function
RTC Alarm	Working	Sets the status bit (RTC_FLAG) in PM1_STS (ACPI I/O Offset 00h[10] = 1). If RTC_EN is enabled (ACPI I/O Offset 02h[10] = 1), an SCI is generated.
	Sleep	Sets the status bit (RTC_FLAG) in PM1_STS (ACPI I/O Offset 00h[10] = 1). If RTC_EN is enabled (ACPI I/O Offset 02h[10] = 1), SCI generation and wakeup from this event is enabled (i.e., sets the WAK_STS bit, ACPI I/O Offset 00h[15] = 1).
	Standby	Sets the status bit (RTC_FLAG) in PM1_STS (ACPI I/O Offset 00h[10] = 1). If RTC_EN is enabled (ACPI I/O Offset 02h[10] = 1), SCI generation and wakeup from this event is enabled (i.e., sets the WAK_STS bit, ACPI I/O Offset 00h[15] = 1).
ACPI Timer (internal timer)	Working	Sets the status bit (TMR_FLAG) in PM1_STS (ACPI I/O Offset 00h[0] = 1). If TMR_EN is enabled (ACPI I/O Offset 02h[0] = 1), an SCI is generated.
GPE[23:0] (General Purpose Power Management Events in Working Domain)	Working	If GPE_EN[23:0] are enabled (ACPI I/O Offset 1Ch[23:0] = 1), the corresponding status bit (GPE_STS[23:0]) in GPE0_STS (ACPI I/O Offset 18h[23:0]) is set and an SCI is generated.
	Sleep	If GPE_EN[23:0] are enabled (ACPI I/O Offset 1Ch[23:0] = 1), SCI generation and wakeup from the event is enabled (i.e., sets the WAK_STS bit, ACPI I/O Offset 00h[15] = 1).
GPE[31:24] (General Purpose Power Management Events in Standby Domain)	Working	If GPE_EN[31:24] are enabled (ACPI I/O Offset 1Ch[31:24] = 1), the corresponding status bit (GPE_STS[31:24]) in GPE0_STS (ACPI I/O Offset 18h[23:0]) is set and an SCI is generated.
	Sleep	If GPE_EN[31:24] are enabled (ACPI I/O Offset 1Ch[23:0] = 1), SCI generation and wakeup from the event is enabled (i.e., sets the WAK_STS bit, ACPI I/O Offset 00h[15] = 1).
	Standby	If GPE_EN[31:24] are enabled (ACPI I/O Offset 1Ch[31:24] = 1), the corresponding status bit (GPE_STS[31:24]) in GPE0_STS (ACPI I/O Offset 18h[23:0]) is set, and SCI generation and wakeup from the event is enabled (i.e., sets the WAK_STS bit, ACPI I/O Offset 00h[15] = 1).
The following events caused a Standby state entry.		
RESET_STAND#	Working	If asserted, the corresponding status bit (OFF_FLAG) in PM_SSC (PMS I/O Offset 54h[0]) is set and causes a Reset Standby state entry. No Working or Standby power.
	Sleep	If asserted, the corresponding status bit (OFF_FLAG) in PM_SSC (PMS I/O Offset 54h[0]) is set and causes a Reset Standby state entry. No Working or Standby power.
	Standby	If asserted in Restart, or Normal or Faulted Standby state, the corresponding status bit (OFF_FLAG) in PM_SSC (PMS I/O Offset 54h[0]) is set and causes a Reset Standby state entry.
LVD circuit detects low voltage on V_{CORE}	Working	If de-asserted, the status bit (LVD_FLAG) in PM_SSC (PMS I/O Offset 54h[2]) is set and causes an Faulted Standby state entry. Working power is turned-off.
	Sleep	If de-asserted, the status bit (LVD_FLAG) in PM_SSC (PMS I/O Offset 54h[2]) is set and causes an Faulted Standby state entry. Working power is turned-off.
	Standby	If de-asserted in Restart state, the status bit (LVD_FLAG) in PM_SSC (PMS I/O Offset 54h[2]) is set and causes an Faulted Standby state entry.

Downloaded from Arrow.com.

Table 5-35. PM Events and Functions (Continued)

Event	Current State	Function
PWR_BTN#	Working	If enabled and asserted for four seconds (fail-safe), the status bit (PWRBTN_FLAG) in PM_SSC (PMS I/O Offset 54h[3]) is set and causes an Faulted Standby state entry. Working power is turned-off.
	Sleep	If enabled and asserted for four seconds (fail-safe), the status bit (PWRBTN_FLAG) in PM_SSC (PMS I/O Offset 54h[3]) is set and causes an Faulted Standby state entry. Working power is turned-off.
	Standby	If enabled and asserted for four seconds (fail-safe) while in Normal or Restart state, the status bit (PWRBTN_FLAG) in PM_SSC (PMS I/O Offset 54h[3]) is set and causes a Faulted Standby state entry.
THRM_ALRM#	Working	If enabled and asserted for a programmable amount of time, the status bit (THRM_FLAG) in PM_SSC (PMS I/O Offset 54h[4]) is set and causes an Faulted Standby state entry. Working power is turned-off.
	Sleep	If enabled and asserted for a programmable amount of time, the status bit (THRM_FLAG) in PM_SSC (PMS I/O Offset 54h[4]) is set and causes an Faulted Standby state entry. Working power is turned-off.
	Standby	Ignored.
LOW_BAT#	Working	If enabled and asserted for a programmable amount of time, the status bit (LOWBAT_FLAG) in PM_SSC (PMS I/O Offset 54h[5]) is set and causes an Faulted Standby state entry. Working power is turned-off.
	Sleep	If enabled and asserted for a programmable amount of time, the status bit (LOWBAT_FLAG) in PM_SSC (PMS I/O Offset 54h[5]) is set and causes an Faulted Standby state entry. Working power is turned-off.
	Standby	If asserted in Normal or Re-start state, the status bit (LOWBAT_FLAG) in PM_SSC (PMS I/O Offset 54h[5]) is set and causes a Faulted state entry.
RESET_WORK#	Working	If asserted, the status bit (HRD_RST_FLAG) in PM_SSC (PMS I/O Offset 54h[6]) is set and causes a Restart state entry. Working power is not turned-off.
	Sleep	If asserted, the status bit (HRD_RST_FLAG) in PM_SSC (PMS I/O Offset 54h[6]) is set and causes a Restart state entry. Working power is not turned-off.
Software initiated reset	Working	If asserted, the status bit (SFT_RST_FLAG) in PM_SSC (PMS I/O Offset 54h[8]) is set and causes a Restart state entry. Working power is not turned-off.
	Sleep	If asserted, the status bit (SFT_RST_FLAG) in PM_SSC (PMS I/O Offset 54h[8]) is set and causes a Restart state entry. Working power is not turned-off.
Shutdown initiated reset (CPU triple fault)	Working	If asserted, the status bit (SHTDWN_RST_FLAG) in PM_SSC (PMS I/O Offset 54h[9]) is set and causes a Re-start state entry. Working power is not turned-off.
	Sleep	If asserted, the status bit (SHTDWN_RST_FLAG) in PM_SSC (PMS I/O Offset 54h[9]) is set and causes a Restart state entry. Working power is not turned-off.
Watchdog initiated reset	Working	If asserted, the status bit (WATCHDOG_RST_FLAG) in PM_SSC (PMS I/O Offset 54h[10]) is set and causes a Restart state entry. Working power is not turned-off.
	Sleep	If asserted, the status bit (WATCHDOG_RST_FLAG) in PM_SSC (PMS I/O Offset 54h[10]) is set and causes a Restart state entry. Working power is not turned-off.
GLCP Soft Reset	Working	If asserted, the status bit (GLCP_SFT_RST_FLAG) in PM_SSC (PMS I/O Offset 54h[11]) is set and causes a Restart state entry. Working power is not turned-off.
	Sleep	If asserted, the status bit (GLCP_SFT_RST_FLAG) in PM_SSC (PMS I/O Offset 54h[11]) is set and causes a Restart state entry. Working power is not turned-off.

Downloaded from Arrow.com.

Table 5-35. PM Events and Functions (Continued)

Event	Current State	Function
Bad packet type reset	Working	If asserted, the status bit (BADPACK_RST_FLAG) in PM_SSC (PMS I/O Offset 54h[12]) is set and causes a Restart state entry. Working power is not turned-off.
	Sleep	If asserted, the status bit (BADPACK_RST_FLAG) in PM_SSC (PMS I/O Offset 54h[12]) is set and causes a Restart state entry. Working power is not turned-off.

Downloaded from Arrow.com.

5.18 Flash Controller

The AMD Geode™ CS5536 companion device has a Flash interface that supports popular NOR Flash and inexpensive NAND Flash devices. This interface is shared with the IDE interface, using the same balls. NOR or NAND Flash may co-exist with IDE devices using PIO (Programmed I/O) mode. The 8-bit interface supports up to four “lanes” of byte-wide Flash devices through use of four independent chip selects, and allows for booting from the array. Hardware support is present for SmartMedia-type ECC (Error Correction Code) calculations, off-loading software from having to support this task. If Flash and IDE are both operational, an external pullup (10K) to IDE_DREQ0 (A14) and IDE_DREQ0 must not be connected to the IDE device. To switch modes, explicit software actions must occur to disable one and enable the other.

Features

- Supports popular NOR Flash and inexpensive NAND Flash devices on IDE interface. No extra pins needed.
- NOR Flash and NAND Flash co-exist with IDE devices with PIO (Programmed I/O) only mode.
- General purpose chip select pins support on-board ISA-like slave devices.
- Programmable timing supports a variety of Flash devices.
- Supports up to four byte-wide NOR Flash devices.
  - — Address up to 256 KB boot ROMs using an external octal latch.
  - — Address up to 256 MB linear Flash memory arrays using external latches.
  - — Boot ROM capability.
  - — Burst mode capability (DWORD read/write on PCI bus).
- Supports up to four byte-wide NAND Flash devices.
  - — Hardware support for SmartMedia-type ECC (Error Correction Code) calculation off-loading software effort.
- Supports four programmable chip select pins with memory or I/O addressable.
  - — Up to 1 KB of address space without external latch.

5.18.1 NAND Flash Controller

To understand the functioning of the NAND Flash Controller, an initialization sequence and a read sequence is provided in the following subsections. The NAND Flash Controller’s registers can be mapped to memory or I/O space. The following example is based on memory mapped registers.

5.18.1.1 Initialization

1) Program DIVIL_LBAR_FLSH0 (MSR 51400010h) to establish a base address (NAND_START) and whether in memory or I/O space. The NAND Controller is memory mapped in this example and always occupies 4 KB of memory space.
2) Set the NAND timing MSRs to the appropriate values (MSRs 5140001Bh and 5140001Ch).

5.18.1.2 Read

1) Allocate a memory buffer. Start at address BAh in system memory.
2) Fill the buffer with the following values:
   - – BA: 02h (Assert CE#, CLE)
   - – BA + 1: 00h (Command: Read mode)
   - – BA + 2: 04h (Assert CE#, ALE, De-assert CLE)
   - – BA + 3: CA (Start column address)
   - – BA + 4: 04h
   - – BA + 5: PA0 (Page address byte 0)
   - – BA + 6: 04h
   - – BA + 7: PA1 (Page address byte 1)
   - – BA + 8: 04h
   - – BA + 9: PA2 (Page address byte 2)
   - – BA + 10: 08h (Assert CE#, De-assert ALE, Enable Interrupt)
3) For (i = 0; i < 11; i++), write the data in buffer [BA+i] to memory location [NAND_START + 800h + i]. Generate the command and address phase on the NAND Flash interface.

Downloaded from Arrow.com.

4) NAND Flash device may pull down the RDY/BUSY# signal at this point. Software sets the EN_INT bit and waits for the interrupt.

5) Memory byte writes 03h to memory location [NAND_START + 815h] to clear ECC parity and Enable ECC engine.

6) For (i = 0; i < 256; i++), read data from [NAND_START + i] to buffer [BA + i] (read data from NAND Flash to memory buffer. Can use DWORD read to save time).

7) Memory DWORD Reads [NAND_START + 810h] to get ECC parity [ECC0] of first 256 byte data.

8) Memory byte writes 03h to memory location [NAND_START + 815h] to clear ECC parity and enable ECC engine.

9) For (i = 256; i < 512; i++), read data from [NAND_START + i] to buffer [BA + i] (read data from NAND Flash to memory buffer. Can use DWORD read to save time).

10) Memory DWORD reads [NAND_START + 810h] to get ECC parity [ECC1] of second 256 byte data.

11) For (i = 512; i < 528; i++), read data from [NAND_START + i] to buffer [BA + i] (read data from NAND Flash redundant data to memory buffer. Can use DWORD read to save time).

12) Write 01h to memory location [NAND_START + 800h] (de-assert CE#, NAND Flash enters to Idle state).

13) Retrieve ECC parity data from redundant data area and compare them to ECC0 and ECC1.

14) Correct data if data error is detected and can be fixed.

Figure 5-55 on page 181 shows a basic NAND read cycle.

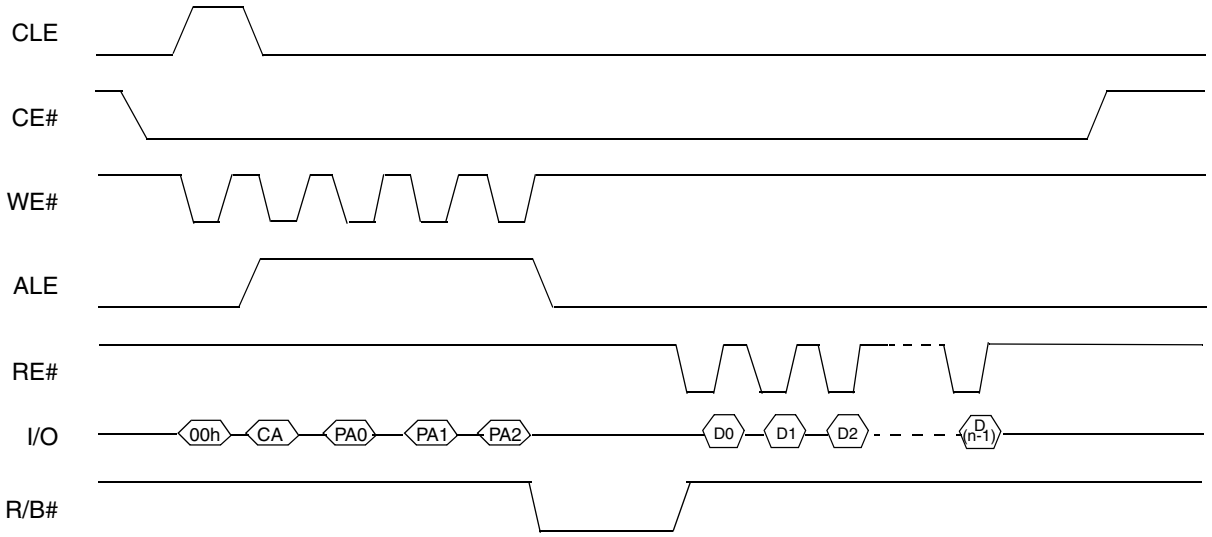

Figure 5-55. Flash Controller NAND Read Cycle

Downloaded from Arrow.com.

5.18.1.3 NAND ECC Control Device

The NAND ECC Control device is part of the NAND Flash Controller. It calculates 22-bit ECC parity for each of the 256 bytes of the NAND Flash's data transferred on the Local bus. The ECC calculation algorithm follows the *SmartMedia Physical Format Specification*. The ECC algorithm is capable of single-bit correction and 2-bit random-error detection. ECCs are generated only for data areas and no ECC is generated for page-data redundant areas containing ECCs as the page-data redundant area is duplicated for reliability. For ECC calculations, 256 bytes are handled as a stream of 2048-bit serial data. In the event of an error, the error-correction feature can detect the bit location of the error based on the results of a parity check and correct the data.

Hardware Operation

The ECC engine treats 256-byte data as a block. Each byte has an 8-bit address called a Line Address (LA). Each bit in a byte has a 3-bit address called a Column Address (CA). Combining these two address fields forms an 11-bit unique address for every single bit in the 256-byte data block. The address uses the notation: LLLL_LLLL, CCC. This device contains an 8-bit counter to keep track of the LA of each byte. Each ECC parity bit calculation in the ECC engine produces even parity of half of the data bits in the block. Different parity bits use different sets of the bits. For example, CP0 is the even parity bit of the bits with Column Address bit 0 equals 0. CP1 is the even parity bit of the bits with Column Address bit 0 equals 1. Both odd and even parity are supported for ECC. The ECC parity available in the NAND ECC column, LSB line, and MSB line parity registers is the inverted output of the ECC parity from the ECC engine in the case of odd ECC parity and the non-inverted output in the case of even parity. Table 5-36 lists the relationship between the parity bits and the corresponding bit addresses. The hardware ECC engine calculates 22-bit ECC parity whenever there is a data write or data read to/from the NAND Flash device. On power-up, the ECC engine is configured to be odd parity. Even or odd ECC parity is controlled by bit 2 of NAND ECC Control register (Flash Memory Offset 815h[2]). For more information on the Flash Controller, see the *NAND Flash Device Specification*.

Table 5-36. ECC Parity/Bit Address Relationship

Parity	Bit Address
CP0	xxxx_xxxx, xx0
CP1	xxxx_xxxx, xx1
CP2	xxxx_xxxx, x0x
CP3	xxxx_xxxx, x1x
CP4	xxxx_xxxx, 0xx
CP5	xxxx_xxxx, 1xx
LP00	xxxx_xxx0, xxx
LP01	xxxx_xxx1, xxx
LP02	xxxx_xx0x, xxx
LP03	xxxx_xx1x, xxx
LP04	xxxx_x0xx, xxx
LP05	xxxx_x1xx, xxx
LP06	xxxx_0xxx, xxx
LP07	xxxx_1xxx, xxx
LP08	xxx0_xxxx, xxx
LP09	xxx1_xxxx, xxx
LP10	xx0x_xxxx, xxx
LP11	xx1x_xxxx, xxx
LP12	x0xx_xxxx, xxx
LP13	x1xx_xxxx, xxx
LP14	0xxx_xxxx, xxx
LP15	1xxx_xxxx, xxx

Downloaded from Arrow.com.

Software Operation

The NAND Flash contains a redundant data area containing ECC fields. While writing to the NAND Flash, the hardware ECC engine calculates ECC parity, if it is enabled properly. Software can write the ECC parity bits to the ECC field after writing the data area. When software reads the data from NAND Flash, the hardware ECC engine calculates ECC parity. After the data is read from the NAND Flash, software can compare the ECC parity in the hardware ECC engine and the ECC parity in the ECC field of the NAND Flash to determine if the data block is correct.

Each data bit has 11 corresponding parity bits, which can be determined by the bit address. If one data bit is different from its original value, 11 ECC parity bits are changed from the original ECC parity bits. Take the ECC parity from the hardware ECC engine and perform bit-wise exclusive OR with it and the ECC parity field in NAND Flash. The result can be as follows.

1) All bits are 0. The data is correct.
2) Eleven bits are 1. One bit error has been detected. Use the eleven bits to identify the error bit position.
3) One bit is 1. One bit in ECC field is corrupt. Data area should be OK.
4) Otherwise, two or more data bits are corrupt. Cannot be corrected.

5.18.2 NOR Flash Controller/General Purpose Chip Select

The NOR Flash Controller supports up to four independent chip selects that can be used for NOR Flash devices or General Purpose Chip Selects (GPCS). Up to 28 bits of address is supported for each chip select, allowing byte-wide linear arrays up to 256 MB in memory space. Chips selects may also be located in I/O space, but the usable address bits are limited by the over all limits of I/O space.

Each chip select is independently programmable:

- Address Setup: Defaults to seven Local bus clocks
- Read/Write Strobe Width: Defaults to seven Local bus clocks
- Address Hold: Defaults to seven Local bus clocks cycles
- Optional Wait State Insertion: Defaults off, driven by an external input (FLASH_IOCHRDY) to be used by General Purpose devices.
- Optional Write Protect: Defaults protected

These settings are located in MSR space and on hard reset default to the settings listed above. Hence, virtually any NOR device can be used immediately out of reset for first instruction fetch. After booting, delays can be programmed as appropriate.

Special considerations must be made for NOR Flash write operations. Depending on the manufacturer and write mode, each write can take from a few microseconds to a few hundred microseconds. Specifically, the software performing the write must observe the following procedure:

1) Write to device.
2) Wait an amount of time dependent on manufacturer's specifications.
3) Repeat from #1 until all writes are completed.

The "wait" in step two is implemented using an appropriate time base reference. There is no reference within the Flash Controller device.

Some NOR devices provide a ready line that de-asserts during the "wait" in step two. Direct use of this signal is not supported by the Flash Controller. The NOR write software should use an appropriate time base reference to determine when the device is ready, that is, determine how long to wait for the current write to complete before starting another write. Alternatively, the NOR device internal status may be read to determine when the write operation is complete. Refer to NOR Flash manufacturer's data sheets for additional write operation details.

Downloaded from Arrow.com.

5.18.3 Flash Controller Interface Timing Diagrams

5.18.3.1 NOR/GPCS

The NOR/GPCS timing has two phases: address phase and data phase.

In the address phase, the address bus and data bus present a higher address, ADD[27:10]. Board designers can use external latches, such as 74x373, to latch the address bits.

In the data phase, the address bus presents ADD[9:0], and the data bus is for data read or write.

The Flash Controller is running off the internal Local bus clock (maximum frequency 33 MHz). The address phase is always two clock periods. The ALE signal asserts high in the first-half clock period and de-asserts in the second clock period. A 74LCX373 only needs 4 ns setup time and 2 ns hold time (worst case). This timing provides a lot of flexibility for the designing of the board. In the data phase, the address bus and write data bus are available in the first clock period. In the second clock period of the data phase, chip select goes low. After the required hold time, chip select goes high, and write data bus change. After one Local bus clock from chip select change (going high), address bus changes. The setup time, strobe pulse width, and hold time are programmable through the NOR timing registers. See Section 6.19.1.2 "NOR Flash Timing MSRs" on page 552.

Figure 5-56 and Figure 5-57 provides some NOR Flash timing examples.

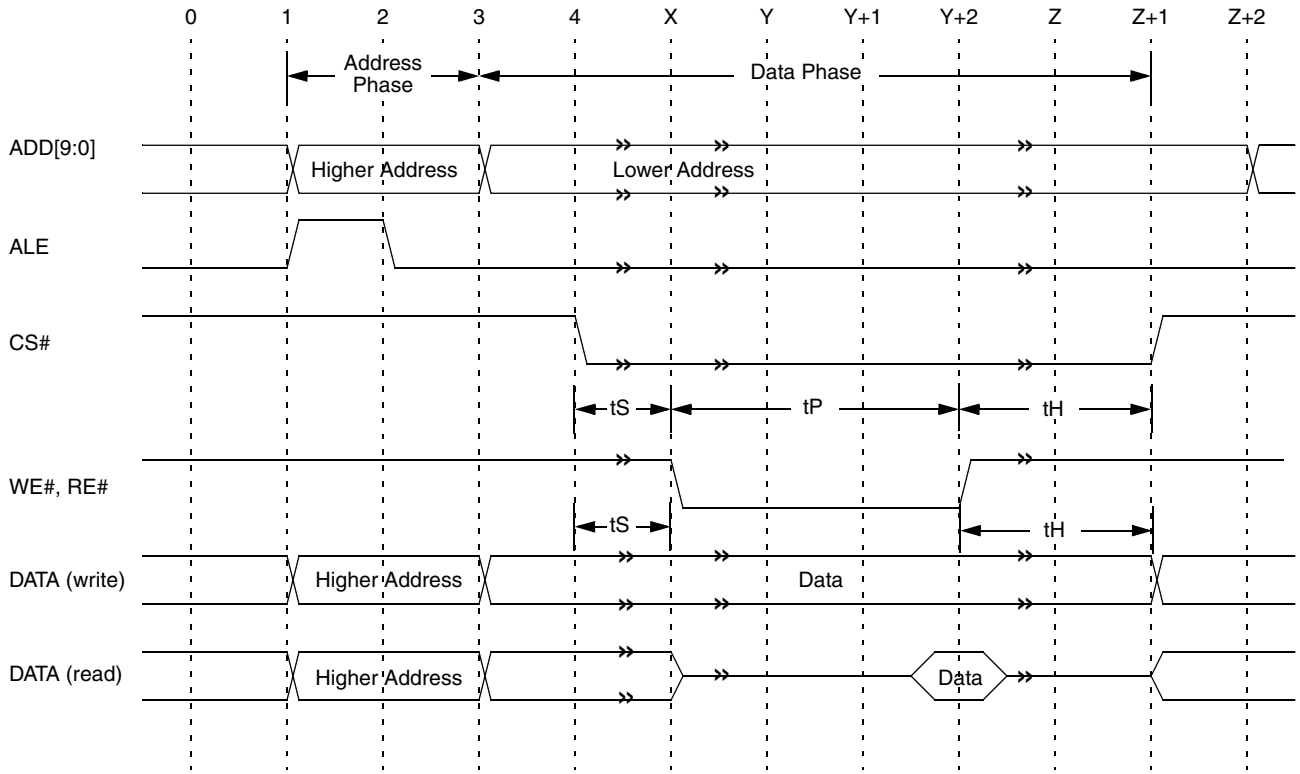

Figure 5-56. NOR Flash Basic Timing

Downloaded from Arrow.com.

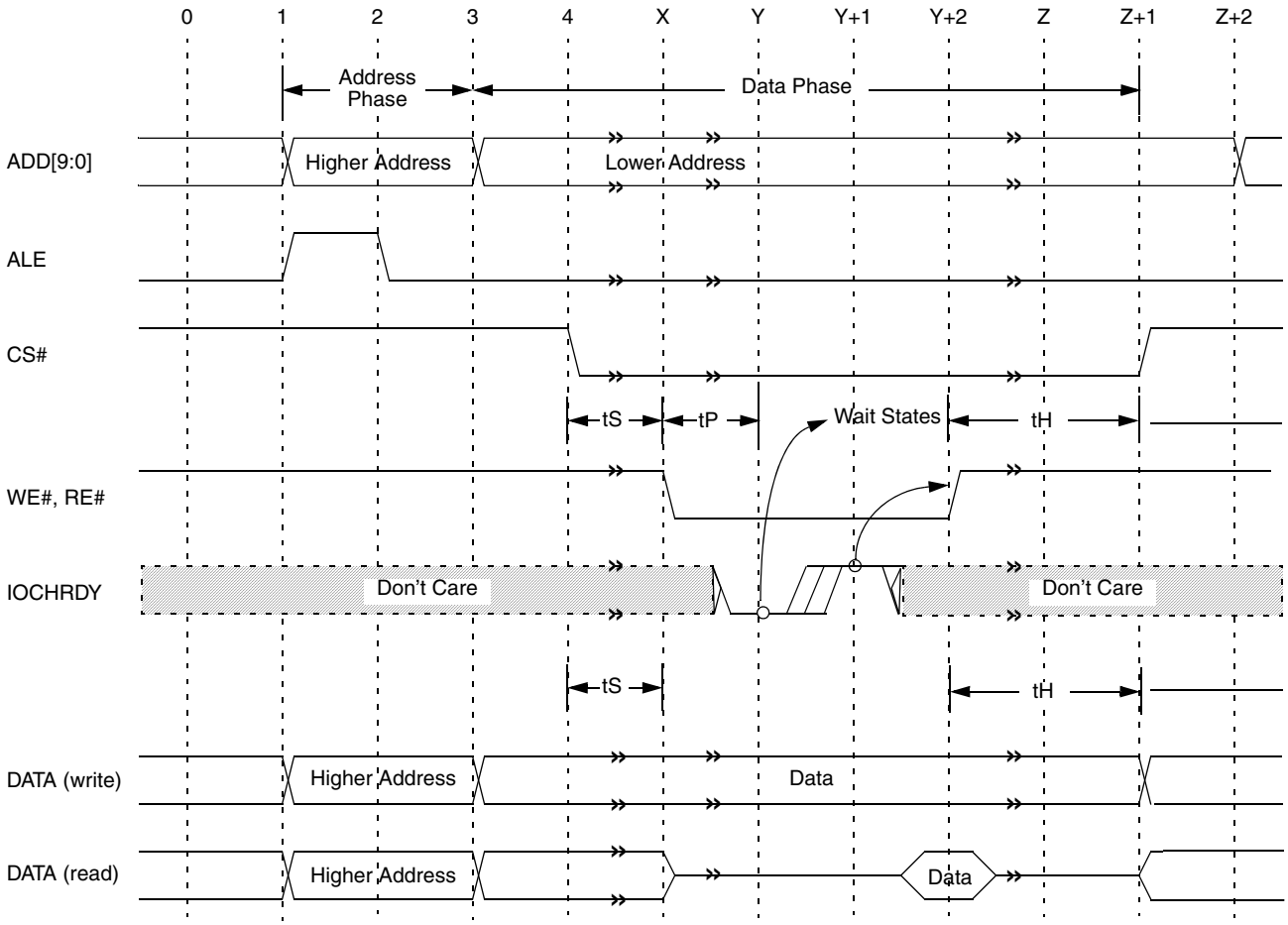

Figure 5-57. NOR Flash with Wait States Timing

Downloaded from Arrow.com.

5.18.3.2 NAND

The NAND Flash interface has three external timings that are controlled by nine timing registers. The timing parameters are described in Table 5-37 and illustrated in Figures 5-58 through 5-60.

Table 5-37. NAND Flash External Timing Parameters

Symbol	Description
tCS	**Control Setup Time.** The setup time from the toggle of the control signals to the falling edge of WE#.
tCP	**Control Pulse Width.** The WE# active pulse width in the Command/Address phase. Note that the command/address byte is put on the I/O bus at the same time that the WE# is asserted.
tCH	**Control Hold Time.** The hold time from the rising edge of WE# to the toggle of the control signals. Note that the I/O bus is turned off when the tCH expires.
tWS	**Data Write Setup Time.** This timing is just for the internal state machine; no external reference point. Can be set to 0 if the setup time is not needed.
tWP	**Data Write Pulse Width.** The WE# active pulse width in the data write phase. Note that the data byte is put on the I/O bus at the same time that WE# is asserted; no external reference point. Can be set to 0 if the hold time is not needed.
tRP	**Data Read Pulse Width.** The RE# active pulse width in the data read phase.
tRH	**Data Read Hold Time.** This timing is just for the internal state machine; no external reference point. Can be set to 0 if the hold time is not needed.
tRS	**Data Read Setup Time.** This timing is just for the internal state machine; no external reference point. Can be set to 0 if the setup time is not needed.

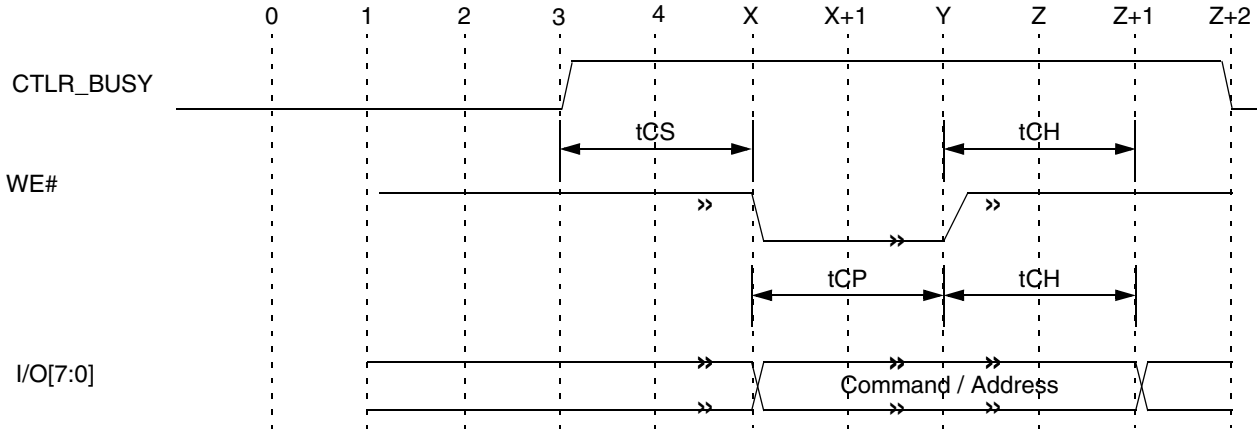

Note: CTLR_BUSY is bit 2 of the NAND Status register (Flash Memory Offset 810h or Flash I/O Offset 06h).

Figure 5-58. NAND Flash Command/Address Timing

Downloaded from Arrow.com.

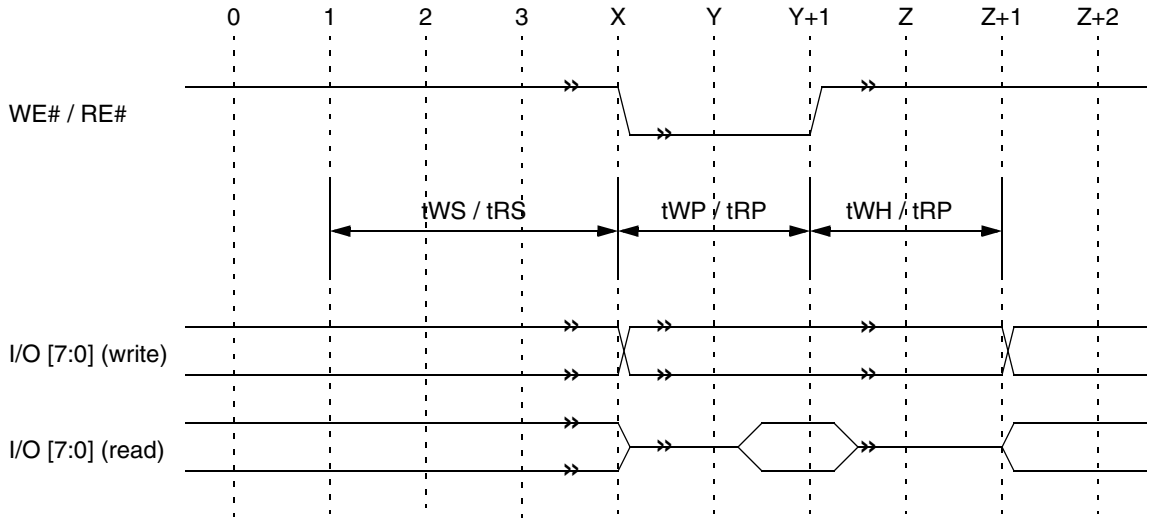

Figure 5-59. NAND Data Timing with No Wait States and No Prefetch (for the first data read)

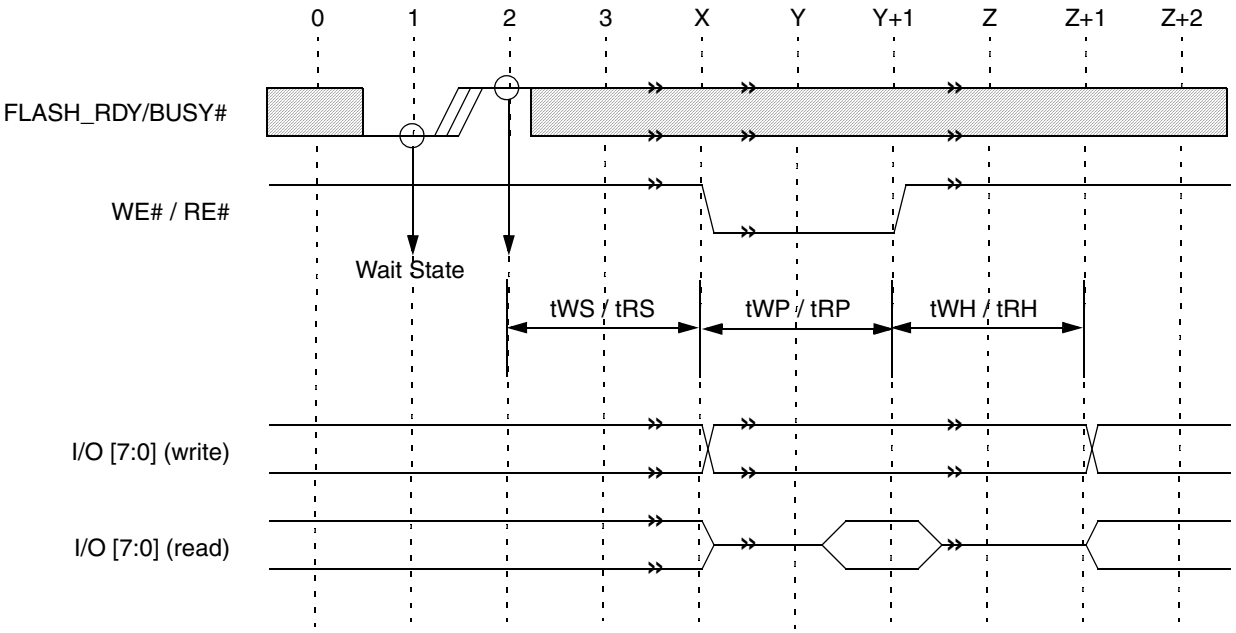

Figure 5-60. NAND Data Timing with Wait States

Downloaded from Arrow.com.

5.19 GeodeLink™ Control Processor

The GeodeLink™ Control Processor (GLCP) functionality is illustrated in Figure 5-61 and is summarized as:

- Serial to GeodeLink conversion to facilitate JTAG accesses to GeodeLink Devices
- Power management support (reset and clock control)
- MSRs

Together with a JTAG controller, the GLCP provides complete visibility of the register state that the chip is in. All registers are accessible via the JTAG interface.

How the JTAG controller interfaces with the GLCP is beyond the scope of this document and is not explained here.

The GLCP also works with the CCU (Clock Control Unit) blocks of other GeodeLink Devices to provide clock control via its relevant MSRs. The GLCP supplies the clock enable signals to all the CCUs, which allows clocks to be shut off if the power management logic generates a Sleep request or if a debug event triggers a clock disable situation.

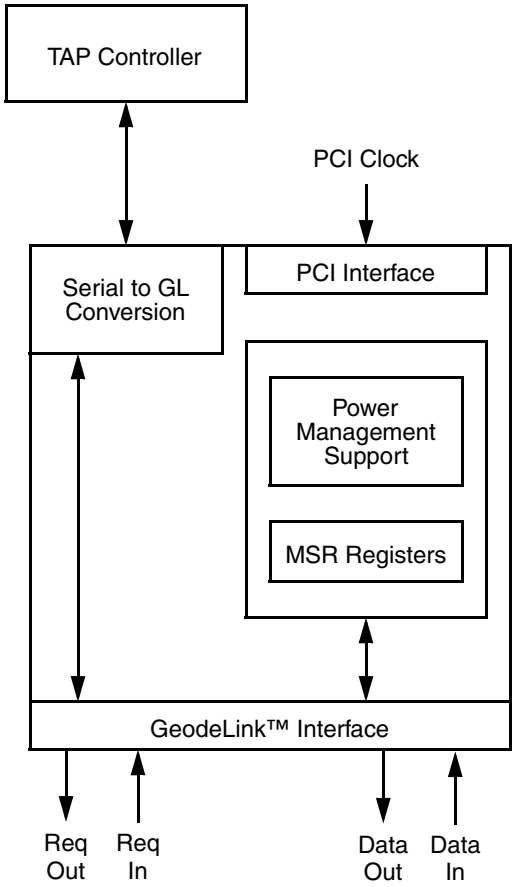

Figure 5-61. GLCP Block Diagram

5.19.1 GeodeLink Power Management Support

The main power management functions are performed by the Power Management Logic, with the GLCP playing a supporting role. (See Section 5.17 "Power Management Control" on page 169 for a complete understanding of power management.)

5.19.1.1 Soft Reset

This is one of the active high soft reset sources going to the Power Management Logic. It resides in the GLCP_SYS_RST register (MSR 51700014h). When active, all circuitry in the CS5536 companion device is reset (including the GLCP_SYS_RST register itself).

5.19.1.2 Clock Control

The GLCP provides a mechanism to shut off clocks. The busy signal from a module can control the clock gating in its CCU, however, clocks can also be enabled or disabled by the functional clock enable signals coming from the GLCP. These enable signals are asynchronous to the modules and need to be synchronized in the CCU blocks before being used to enable or disable the functional clocks.

The clocks can be disabled in one or a combination of the three ways below. All the MSRs mentioned can be found in Section 6.18 "Power Management Controller Register Descriptions" on page 524 and Section 6.20 "GeodeLink™ Control Processor Register Descriptions" on page 561.

1) The power management circuitry disables the clocks when going into Sleep. The Sleep sequence is started by the assertion of Sleep Request from the Power Management Logic. The GLCP asserts Sleep Request and waits for the assertion of Sleep Acknowledge, which indicates that the clocks should be disabled. There are two ways to do this:

   A) If Sleep Acknowledge is asserted and the clock disable delay period has expired, disable the clocks specified in GLCP_PMCLKDISABLE (MSR 51700009h). Each bit in GLCP_PMCLKDISABLE corresponds to a CCU, and when set, indicates that the clock going to that CCU should be disabled during a Sleep sequence. The clock disable delay period is specified by the CLK_DELAY bits in GLCP_CLK_DIS_DELAY (MSR 51700008h), and is enabled by the CLK_DLY_EN bit in GLCP_GLB_PM (MSR 5170000Bh). It is clocked by the PCI functional clock.

Downloaded from Arrow.com.

B) If Sleep Acknowledge is asserted and the clock disable delay period is not enabled, check to see if all clocks specified by GLCP_CLK4ACK (MSR 51700013h) have become inactive. If GLCP_CLKACTIVE (MSR 51700011h) shows that those clocks are indeed inactive, disable the clocks specified in GLCP_PMCLKDISABLE (MSR 51700009h).

Sleep Acknowledge is asserted after the clocks have been disabled. The wakeup sequence is triggered by the de-assertion of the Sleep Request, which turns on all the clocks.

2) If a debug event in the debug circuitry triggers a clock disable, disable all the clocks specified in GLCP_CLKDISABLE. Each GLCP_CLKDISABLE bit corresponds to a CCU, and when set, indicates that the clock going to that CCU should be disabled.

3) Each bit in GLCP_CLKOFF (MSR 51700010h) corresponds to a CCU. When set, the bit indicates that the clock going to that CCU should be disabled. This is the simplest case.

5.19.2 GLCP Clocks

The GLCP has multiple clock domains, namely the GeodeLink clock and PCI clock. The GeodeLink clock is the clock source for the MSRs, the serial interface, and the GeodeLink interface. The PCI clock is used in the power management support for the clock disable delay timer. Both the GeodeLink and PCI functional clocks come from primary inputs. All these clocks are handled by a CCU. Even though the PCI clock is always running in functional mode, a CCU is needed to be able to perform reset synchronization and to turn off the internal clock to support TAPSCAN. The CCUs used by the GLCP are the asynchronous versions, since the GLCP outputs asynchronous busy signals.

Downloaded from Arrow.com.

5.20 Test Controller

The TAP controller is IEEE 1149.1 specification compliant. A block diagram of the TAP controller and the boundary scan implementation are shown in Figure 5-62. The TAP is programmable by means of TAP control instructions, shown in Table 5-38 on page 191. All data registers shift in and out data, LSB first. The instruction register and all data registers are shift registers, so if more bits are shifted in than the register can hold, only the last bits shifted in, the MSBs, are used. This can be useful on systems that always shift in a multiple of 8 bits to the data or instruction registers.

The TAP controller can be initialized synchronously or asynchronously. For a synchronous reset, holding TMS high and clocking TCK_C a minimum of five times puts the TAP state machine into the Test-Logic-Reset state. Asynchronous reset is available by asserting TRST_N (Tap Controller Reset). From TRST_N, the TAP state machine immediately enters the Test-Logic-Reset state. On this device TRST_N is connected to RESET_WORK#.

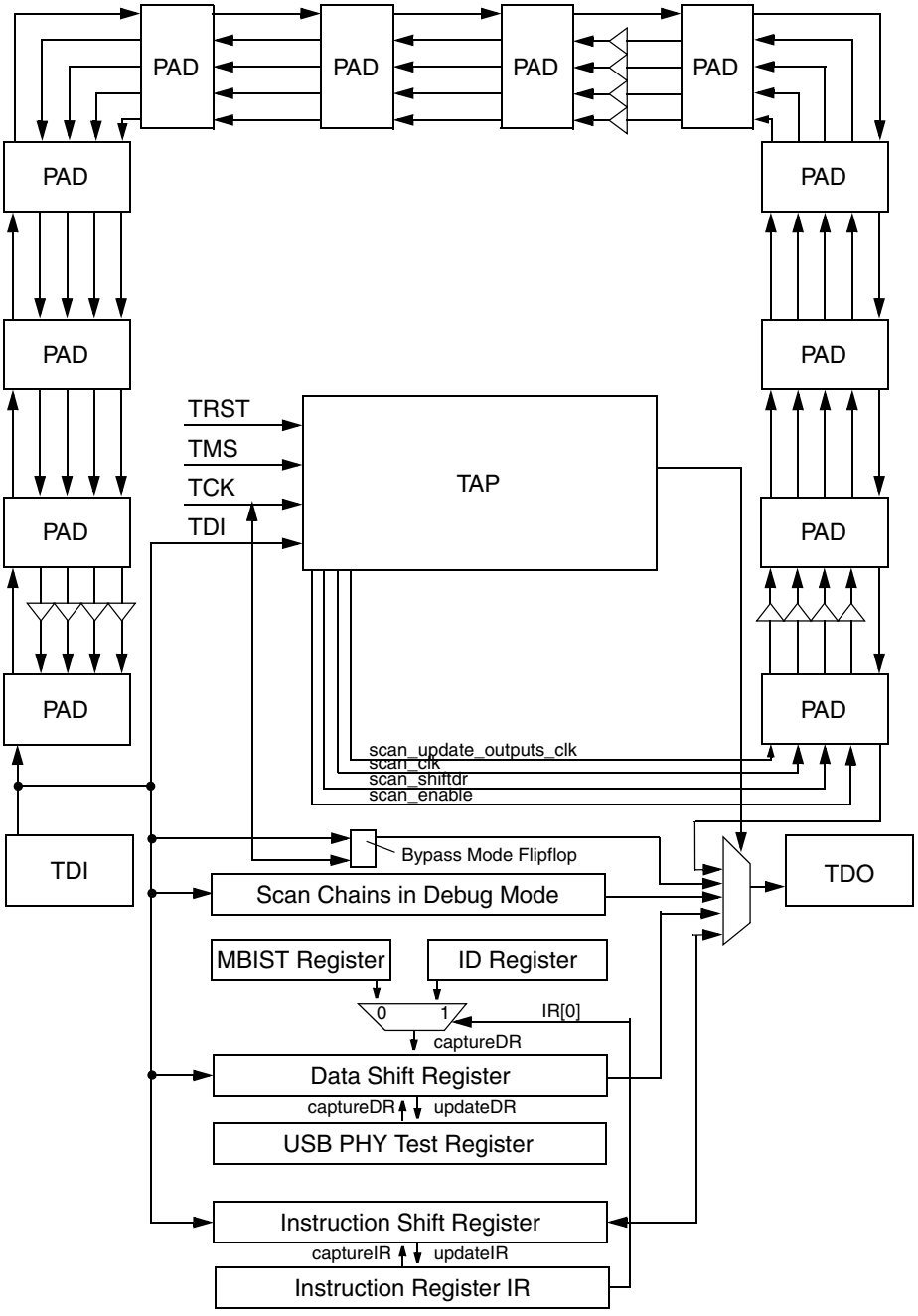

Figure 5-62. TAP Controller Boundary Scan Block Diagram

Downloaded from Arrow.com.

5.20.1 Instruction Register

The TAP controller has specific pre-assigned meanings to the bits in the 24-bit IR register. Note that the bits only affect the processor once the Update-IR JTAG state occurs in the JTAG controller. Shifting through these bits will not change the state of internal signals (for example test_mode). The details on JTAG controller states are covered in the IEEE 1149.1 standard.

Table 5-38. TAP Controller Instructions

Instruction	IR Name	Brief Description
000000h and FFFFE8h	EXTEST[241:0]	**Boundary Scan Register.** IEEE 1149.1 specification compliant. (Mapped twice in IR address space.)
01EFFAh, 03EFFAh,..., 45EFFAh	TAPSCAN0, TAPSCAN1,.., TAPSCAN34	**TAP Scan Chain 0 Through 34.** These are parts of the internal scan chain subdivided according to a common CCU clock. TAP scan chains 5-9 are unused.
01EFFFh, 03EFFFh,..., 45EFFFh	TAPFUNC0, TAPFUNC1,.., TAPFUNC34	**TAP Function Chain 0 Through 34.** One capture cycle applied to the individual CCU scan chain clocked by the functional clock. TAP scan chains 5-9 are unused.
81FFFAh	GL_ADDR[69:0]	**GeodeLink™ Address.** Access GeodeLink request packet and data packet control bits.
83FFFAh	GL_DATA[65:0]	**GeodeLink Data.** Access GeodeLink data.
85FFFAh	PADACC[3:0]	N/A.
87FFFAh	PROGMISR[23:0]	N/A.
8BFFFAh	GL_ADDR_ACT[69:0]	**GeodeLink Address Action.** Same data register as MB_ADDR, but no GeodeLink transactions are triggered by the access - only by GLCP debug action.
8DFFFAh	TST_IDDQ	**Test IDDQ.** Put the device in a mode for running IDDQ tests.
8FFFFAh	REVID[7:0]	**Revision ID.** Access device revision code.
FFFFDFh	TRISTATE[0]	**TRI-STATE.** Put device I/Os in TRI-STATE mode.
FFEFFDh	BISTDR[20:0]	**Parallel RAM BIST.** Internal one hot coded BIST Data register.
FFFFFEh	IDCODE[31:0]	**ID Code.** Boundary scan ID code - IEEE 1149.1 specification compliant. ID code = 0x1E001003 for CS5536 companion device revision A0 ID code = 0x2E001003 for CS5536 companion device revision B0 ID code = 0x3E001003 for CS5536 companion device revision B1 ID31...ID28, ID27...ID12, ID11...ID1, ID0 Version, Part Number, Manuf. ID, 1
FFFFFFh	BYPASS[0]	**Bypass.** Boundary scan Bypass - IEEE 1149.1 spec compliant.

Downloaded from Arrow.com.

EXTEST

The EXTEST instruction accesses the boundary scan chain around the processor and controls the pad logic such that the boundary scan data will control the data and enable signals for the pads. IEEE 1149.1 requires that an all-zero instructions access the boundary scan chain. The TAP controller catches the all-zero condition during the Update-IR state and loads 0xFFFFE8 into the internal instruction register.

GL_ADDR

This register contains 53 bits for a GeodeLink control packet and the 17 bits for a GeodeLink data packet. The 17 bits for the data packet are updated if a GeodeLink read is requested and is available for shifting out. The GL_DATA description discusses the various conditions under which a valid request packet is posted to the internal GeodeLink. Note that since only one GL_ADDR request packet can be sequenced in with JTAG, the special "read with byte enable" 2-packet requests that GeodeLink supports cannot be triggered. 8, 16, 32, and 64-bit reads can still be performed and reads of less than 64-bit sizes generate the appropriate byte enables at the device. As with GeodeLink traffic, reads of less than 64 bits must be to an aligned address, but the data will return in the GL_DATA adjusted to 64-bit alignment (i.e., a 16-bit read to address 102h should have address bit 1 set and data will return in bits [31:16] of the 64-bit response). Writes of less than 64 bits must always have 64-bit aligned addresses and should use the byte enables in the data packet (part of the GL_ADDR data register) to identify which specific bytes are to be written.

GL_DATA

The data transfer rate in and out of the JTAG port is limited to about 90% of the TCK frequency by the GLCP design. The GLCP is designed for up to 50 MHz TCKs, but typical TCK rates for industry interfaces are about 15 MHz. As such, the GLCP JTAG data rate is 14 Mbits/sec or 1.6 Mbytes/sec. However, industry interface boxes will limit this rate to about 500 kbytes/sec.

GeodeLink requests packets are triggered at these specific moments:

- If GL_ADDR has been accessed more recently than GL_ADDR_ACT and:
  - — The TYPE of the request is a read and the Update-DR JTAG state is entered after loading the GL_ADDR register.
  - — The TYPE of the request is a write and the Update-DR JTAG state is entered after loading the GL_DATA register.
  - — The TYPE of the request is a read, the second TCK in the Shift-DR state for shifting out the GL_DATA register is received, and the first two bits shifted in (GL_DATA DR bits 1 and 0) are non-zero and the first bit shifted out was non-zero.
- If the GL_ADDR_ACT register has been accessed more recently than GL_ADDR and:
  - — The GLCP debug logic triggers the GeodeLink_action due to a debug event occurring.

Note that if both MSR accesses from the GLIU and JTAG are interfacing to these registers, the results will be non-deterministic.

GL_ADDR_ACT

This is the same data register as GL_ADDR, but it disables any GeodeLink transaction from occurring either on this access or a following access to the GL_DATA register. Only the GLCP debug action that triggers a GeodeLink cycle will cause these bits to be used.

TST_IDDQ

TST_IDDQ places the chip in a mode for running IDDQ tests (i.e., generates an internal signal to disable pull-ups and pull downs). Also the USB transceiver is powered off.

REVID

REVID is the TAP instruction used to access the current 8-bit revision code of the chip.

TRI-STATE

This instruction will TRI-STATE all of the tri-statable primary outputs. The DR accessed is the BYPASS register.

IDCODE

This instruction accesses the 32-bit IDCODE register during DR access.

BYPASS

In the IEEE 1149.1 specification, shifting all 1s into the IR must connect the 1-bit BYPASS register. The register has no function except as a storage flip-flop. This instruction can also allow relatively easy connection of multiple GLCP JTAG interface chips. On a board with two GLCP chips, TMS and TCK of each chip should be wired together and TDO of one chip should connect to TDI of the other chip.

Note: In parallel scan mode, "input" pads provide data into the boundary scan cells (the boundary scan cells provide data into the core). "Cowrie" pads will behave as dictated by the internal core flops that normally control the pad; the output data and enable state will be latched into the boundary scan cells. "Cheroot" pads will drive out data as dictated by the internal core flop associated with the pad.

Downloaded from Arrow.com.

6 Register Descriptions

This chapter provides detailed information regarding the registers of the AMD Geode™ CS5536 companion device. The register descriptions are documented at the module-level and briefly summarized below.

GeodeLink™ Interface Unit (GLIU)
- Standard GeodeLink™ Device (GLD) MSRs: Accessed via RDMSR and WRMSR instructions.
- P2D Descriptor MSRs: Accessed via RDMSR and WRMSR instructions. (Memory base descriptor.)
- GLIU Specific MSRs: Accessed via RDMSR and WRMSR instructions.
- IOD Descriptor MSRs: Accessed via RDMSR and WRMSR instructions. (I/O base descriptor.)

GeodeLink PCI South Bridge (GLPCI_SB)
- Standard GeodeLink™ Device (GLD) MSRs: Accessed via RDMSR and WRMSR instructions.
- GLPCI_SB Specific MSRs: Accessed via RDMSR and WRMSR instructions.
- PCI Configuration Registers: Index accessed via PCI configuration cycle.

Audio Codec 97 Controller (ACC)
- Standard GeodeLink Device (GLD) MSRs: Accessed via RDMSR and WRMSR instructions.
- ACC Native Registers: Accessed as I/O offsets from a GLIU IOD descriptor.

IDE Controller (IDE)
- Standard GeodeLink™ Device (GLD) MSRs: Accessed via RDMSR and WRMSR instructions.
- IDE Controller Specific MSRs: Accessed via RDMSR and WRMSR instructions.
- IDE Controller Native Registers: Accessed as I/O offsets from a GLIU IOD descriptor.

Universal Serial Bus Controllers
- Standard GeodeLink™ Device (GLD) MSRs: Accessed via RDMSR and WRMSR instructions.
- This register is reserved for internal use by AMD and should not be written to. USB Specific MSRs: Accessed via RDMSR and WRMSR instructions.
- **USB OHC Native Registers:** Accessed via base address register MSR51200008, as memory offsets.
- USB EHC Native Registers via base address register MSR51200009, as memory offsets.
- USB Device Controller Native Registers via base address register MSR5120000A, as memory offsets.
- USB Option Controller Native Registers via base address register MSR5120000B, as memory offsets.

Diverse Integration Logic (DIVIL)
- Standard GeodeLink™ Device (GLD) MSRs: Accessed via RDMSR and WRMSR instructions.
- DIVIL Specific MSRs: Accessed via RDMSR and WRMSR instructions.

Floppy Port
- Standard GeodeLink Device (GLD) MSRs: Accessed via RDMSR and WRMSR instructions. (Shared with DIVIL.)
- Floppy Port Specific MSRs: Accessed via RDMSR and WRMSR instructions.

Programmable Interval Timer (PIT)
- Standard GeodeLink Device (GLD) MSRs: Accessed via RDMSR and WRMSR instructions. (Shared with DIVIL.)
- PIT Specific MSRs: Accessed via RDMSR and WRMSR instructions.
- PIT Native Registers: Accessed as I/O addresses.

Programmable Interrupt Controller (PIC)
- Standard GeodeLink Device (GLD) MSRs: Accessed via RDMSR and WRMSR instructions. (Shared with DIVIL.)
- PIC Specific MSRs: Accessed via RDMSR and WRMSR instructions.
- PIC Native Registers: Accessed as I/O addresses.

System Management Bus (SMB)
- Standard GeodeLink Device (GLD) MSRs: Accessed via RDMSR and WRMSR instructions. (Shared with DIVIL.)
- SMB Native Registers: Accessed via a base address register, MSR_LBAR_SMB (MSR 5140000Bh), as I/O offsets.

Downloaded from Arrow.com.

Keyboard Emulation Logic (KEL)
- Standard GeodeLink Device (GLD) MSRs: Accessed via RDMSR and WRMSR instructions. (Shared with DIVIL.)
- KEL Specific MSRs: Accessed via RDMSR and WRMSR instructions.
- KEL Native Registers: Accessed via a base address register, MSR_LBAR_KEL (MSR 51400009h), as memory offsets.

Universal Asynchronous Receiver-Transmitter (UART)
- Standard GeodeLink Device (GLD) MSRs: Accessed via RDMSR and WRMSR instructions. (Shared with DIVIL.)
- UART/IR Controller Specific MSRs: Accessed via RDMSR and WRMSR instructions.
- UART/IR Controller Native Registers: Accessed via Banks 0 through 7 as I/O offsets. See MSR_LEG_IO (MSR 51400014h) bits [22:20] and bits [18:16] for setting base address.

Direct Memory Access (DMA)
- Standard GeodeLink Device (GLD) MSRs: Accessed via RDMSR and WRMSR instructions. (Shared with DIVIL.)
- DMA Specific MSRs: Accessed via RDMSR and WRMSR instructions.
- DMA Native Registers: Accessed as I/O Addresses.

Low Pin Count (LPC)
- Standard GeodeLink Device (GLD) MSRs: Accessed via RDMSR and WRMSR instructions. (Shared with DIVIL.)
- LPC Specific MSRs: Accessed via RDMSR and WRMSR instructions.

Real-Time Clock (RTC)
- Standard GeodeLink Device (GLD) MSRs: Accessed via RDMSR and WRMSR instructions. (Shared with DIVIL.)
- RTC Specific MSRs: Accessed via RDMSR and WRMSR instructions.
- RTC Native Registers: Accessed as I/O addresses.

General Purpose Input Output (GPIO)
- Standard GeodeLink Device (GLD) MSRs: Accessed via RDMSR and WRMSR instructions. (Shared with DIVIL.)
- GPIO Native Registers: Accessed via a base address register, MSR_LBAR_GPIO (MSR 5140000Ch), as I/O offsets.
  - GPIO Low/High Bank Feature Bit Registers
  - GPIO Input Conditioning Function Registers
  - GPIO Interrupt and PME Registers

Multi-Function General Purpose Timer (MFGPT)
- Standard GeodeLink Device (GLD) MSRs: Accessed via RDMSR and WRMSR instructions. (Shared with DIVIL.)
- MFGPT Specific MSRs: Accessed via RDMSR and WRMSR instructions.
- MFGPT Native Registers: Accessed via a base address register, MSR_LBAR_MFGPT (MSR 5140000Dh), as I/O offsets.

Power Management Controller (PMC)
- Standard GeodeLink Device (GLD) MSRs: Accessed via RDMSR and WRMSR instructions. (Shared with DIVIL.)
- PMC Specific MSRs: Accessed via RDMSR and WRMSR instructions.
- ACPI Registers: Accessed via a base address register, MSR_LBAR_ACPI (MSR 5140000Eh), as I/O offsets.
- PM Support Registers: Accessed via a base address register, MSR_LBAR_PMS (MSR 5140000Fh), as I/O offsets.

Flash Controller
- Standard GeodeLink Device (GLD) MSRs: Accessed via RDMSR and WRMSR instructions. (Shared with DIVIL.)
- Flash Controller Specific MSRs: Accessed via RDMSR and WRMSR instructions.
- Flash Controller Native Registers: Accessed via a base address register as either memory or I/O offsets:
  - MSR_LBAR_FLSH0 (MSR 51400010h) for use with FLASH_CS0#.
  - MSR_LBAR_FLSH1 (MSR 51400011h) for use with FLASH_CS1#.
  - MSR_LBAR_FLSH2 (MSR 51400012h) for use with FLASH_CS2#.
  - MSR_LBAR_FLSH3 (MSR 51400013h) for use with FLASH_CS3#.

GeodeLink Control Processor (GLCP)
- Standard GeodeLink™ Device (GLD) MSRs: Accessed via RDMSR and WRMSR instructions.
- GLCP Specific MSRs: Accessed via RDMSR and WRMSR instructions.

Note that MSRs for the Floppy Port, PIT, PIC, KEL, SMB, UART, DMA, LPC, RTC, GPIO, MFGPT, and Flash Controller devices are part of the DIVIL module (i.e., MSR 51400000h-514000FFh). Hence, the Standard GeodeLink Device MSRs (MSR 51400000h-51400007h) are documented in the DIVIL register description and the device Specific MSRs are documented in their appropriate register description chapter.

The tables in this chapter use the following abbreviations:

Type	Description
R/W	Read/Write.
R	Read from a specific address returns the value of a specific register. Write to the same address is to a different register.
W	Write.
RO	Read Only.
WO	Write Only.
R/W1C	Read/Write 1 to clear. Writing 1 to a bit clears it to 0. Writing 0 has no effect.

Downloaded from Arrow.com.

6.1 GeodeLink™ Interface Unit Register Descriptions

The GeodeLink™ Interface Unit (GLIU) registers are Model Specific Registers (MSRs) and are accessed through the RDMSR and WRMSR instructions. The MSR address is derived from the perspective of the CPU Core. See Section 4.2 "MSR Addressing" on page 60 for details.

The GLIU MSRs are split into the following groups:

- Standard GeodeLink Device (GLD) MSRs
- P2D Descriptor MSRs
- GLIU Specific MSRs
- IOD Descriptor MSRs

Tables 6-1 through 6-4 are GLIU register summary tables that include reset values and page references where the bit descriptions are provided.

Reserved (RSVD) fields do not have any meaningful storage elements. They always return 0.

Table 6-1. Standard GeodeLink™ Device MSRs Summary

MSR Address	Type	Register Name	Reset Value	Reference
51010000h	RO	GLD Capabilities MSR (GLIU_GLD_MSR_CAP)	00000000_005015xxh	Page 198
51010001h	R/W	GLD Master Configuration MSR (GLIU_GLD_MSR_CONFIG)	0000000_00000004h	Page 198
51010002h	R/W	GLD SMI MSR (GLIU_GLD_MSR_SMI)	00000000_00000001h	Page 199
51010003h	R/W	GLD Error MSR (GLIU_GLD_MSR_ERROR)	00000000_00000001h	Page 200
51010004h	R/W	GLD Power Management MSR (GLIU_GLD_MSR_PM)	00000000_00000000h	Page 202
51010005h	R/W	GLD Diagnostic MSR (GLIU_GLD_MSR_DIAG)	00000000_00000000h	Page 202
51010006h-5101000Fh	R/W	GLIU Reserved MSRs (GLD_MSRs_RSVD)	00000000_00000000h	---

Table 6-2. P2D Descriptor MSRs Summary

MSR Address	Type	Register Name	Reset Value	Reference
51010020h	R/W	P2D Base Mask Descriptor 0 (GLIU_P2D_BM0)	000000FF_FFF00000h	Page 203
51010021h	R/W	P2D Base Mask Descriptor 1 (GLIU_P2D_BM1)	000000FF_FFF00000h	Page 203
51010022h	R/W	P2D Base Mask Descriptor 2 (GLIU_P2D_BM2)	000000FF_FFF00000h	Page 203
51010023h	R/W	P2D Base Mask KEL Descriptor 0 (GLIU_P2D_BMK0)	000000FF_FFF00000h	Page 204
51010024h	R/W	P2D Base Mask KEL Descriptor 1 (GLIU_P2D_BMK1)	000000FF_FFF00000h	Page 204
51010025h	R/W	P2D Base Mask Descriptor 3 (GLIU_P2D_BM3)	000000FF_FFF00000h	Page 203
51010026h	R/W	P2D Base Mask Descriptor 4 (GLIU_P2D_BM4)	000000FF_FFF00000h	Page 203
51010027h-5101003Fh	R/W	P2D Reserved Descriptors (P2D_RSVD)	00000000_00000000h	---

Downloaded from Arrow.com.

Table 6-3. GLIU Specific MSRs Summary

MSR Address	Type	Register Name	Reset Value	Reference
51010080h	R/W	Coherency (GLIU_COH)	00000000_00000000h	Page 205
51010081h	R/W	Port Active Enable (GLIU_PAE)	00000000_0000FFFFh	Page 205
51010082h	R/W	Arbitration (GLIU_ARB)	00000000_00000000h	Page 206
51010083h	R/W	Asynchronous SMI (GLIU_ASMI)	00000000_00000000h	Page 207
51010084h	R/W	Asynchronous Error (GLIU_AERR)	00000000_00000000h	Page 208
51010085h	R/W	Debug (GLIU_DEBUG)	00000000_00000004h	Page 209
51010086h	RO	Physical Capabilities (GLIU_PHY_CAP)	327920A0_80000005h	Page 209
51010087h	RO	N Outstanding Response (GLIU_NOUT_RESP)	00000000_00000000h ()	Page 210
51010088h	RO	Number of Outstanding Write Data (GLIU_NOUT_WDATA)	00000000_00000000h	Page 211
51010089h-5101008Ah	R/W	Reserved (RSVD)	00000000_00000000h	---
5101008Bh	RO	WHO AM I (GLIU_WHOAMI)	Configuration Dependent	Page 211
5101008Ch	R/W	Slave Disable (GLIU_SLV_DIS)	00000000_00000040h	Page 211
5101008Dh-5101008Fh	R/W	Reserved (RSVD)	00000000_00000000h	---
510100A0h	WO	Descriptor Statistic Counter 0 (GLIU_STATISTIC_CNT0)	00000000_00000000h	Page 212
510100A1h	R/W	Descriptor Statistic Mask 0 (GLIU_STATISTIC_MASK0)	00000000_00000000h	Page 213
510100A2h	R/W	Descriptor Statistic Action 0 (GLIU_STATISTIC_ACTION0)	00000000_00000000h	Page 214
510100A3h	R/W	Reserved (RSVD)	00000000_00000000h	---
510100A4h	WO	Descriptor Statistic Counter 1 (GLIU_STATISTIC_CNT1)	00000000_00000000h	Page 212
510100A5h	R/W	Descriptor Statistic Mask 1 (GLIU_STATISTIC_MASK1)	00000000_00000000h	Page 213
510100A6h	R/W	Descriptor Statistic Action 1 (GLIU_STATISTIC_ACTION1)	00000000_00000000h	Page 214
510100A7h	R/W	Reserved (RSVD)	00000000_00000000h	---
510100A8h	WO	Descriptor Statistic Counter 2 (GLIU_STATISTIC_CNT2)	00000000_00000000h	Page 212
510100A9h	R/W	Descriptor Statistic Mask 2 (GLIU_STATISTIC_MASK2)	00000000_00000000h	Page 213
510100AAh	R/W	Descriptor Statistic Action 2 (GLIU_STATISTIC_ACTION2)	00000000_00000000h	Page 214
510100ABh-510100BFh	R/W	Reserved (RSVD)	00000000_00000000h	---
510100C0h	R/W	Request Compare Value (GLIU_RQ_COMP_VAL)	001FFFFF_FFFFFFFFh	Page 215
510100C1h	R/W	Request Compare Mask (GLIU_RQ_COMP_MASK)	00000000_00000000h	Page 216

Downloaded from Arrow.com.

Table 6-3. GLIU Specific MSRs Summary (Continued)

MSR Address	Type	Register Name	Reset Value	Reference
510100C2h-510100CFh	R/W	Reserved (RSVD)	00000000_00000000h	---
510100D0h	R/W	Data Compare Value Low (GLIU_DA_COMP_VAL_LO)	00001FFF_FFFFFFFFh	Page 216
510100D1h	R/W	Data Compare Value High (GLIU_DA_COMP_VAL_HI)	0000000F_FFFFFFFFh	Page 217
510100D2h	R/W	Data Compare Mask Low (GLIU_DA_COMP_MASK_LO)	00000000_00000000h	Page 218
510100D3h	R/W	Data Compare Mask High (GLIU_DA_COMP_MASK_HI)	00000000_00000000h	Page 218
510100D4h-510100DFh	R/W	Reserved (RSVD)	00000000_00000000h	---

Table 6-4. IOD Descriptor MSRs Summary

MSR Address	Type	Register Name	Reset Value	Reference
510100E0h	R/W	IOD Base Mask 0 (GLIU_IOD_BM0); Reserved for ATA; Defaults to $1Fx_{16}$.	60000000_1F0FFFF0h	Page 219
510100E1h	R/W	IOD Base Mask 1 (GLIU_IOD_BM1)	000000FF_FFF00000h	Page 219
510100E2h	R/W	IOD Base Mask 2 (GLIU_IOD_BM2)	000000FF_FFF00000h	Page 219
510100E3h	R/W	IOD Base Mask 3 (GLIU_IOD_BM3)	000000FF_FFF00000h	Page 219
510100E4h	R/W	IOD Base Mask 4 (GLIU_IOD_BM4)	000000FF_FFF00000h	Page 219
510100E5h	R/W	IOD Base Mask 5 (GLIU_IOD_BM5)	000000FF_FFF00000h	Page 219
510100E6h	R/W	IOD Base Mask 6 (GLIU_IOD_BM6)	000000FF_FFF00000h	Page 219
510100E7h	R/W	IOD Base Mask 7 (GLIU_IOD_BM7)	000000FF_FFF00000h	Page 219
510100E8h	R/W	IOD Base Mask 8 (GLIU_IOD_BM8)	000000FF_FFF00000h	Page 219
510100E9h	R/W	IOD Base Mask 9 (GLIU_IOD_BM9)	000000FF_FFF00000h	Page 219
510100EAh	R/W	IOD Swiss Cheese 0 (GLIU_IOD_SC0)	60000000_403003F0h	Page 220
510100EBh	R/W	IOD Swiss Cheese 1 (GLIU_IOD_SC1)	00000000_00000000h	Page 220
510100ECh	R/W	IOD Swiss Cheese 2 (GLIU_IOD_SC2)	00000000_00000000h	Page 220
510100EDh	R/W	IOD Swiss Cheese 3 (GLIU_IOD_SC3)	00000000_00000000h	Page 220
510100EEh	R/W	IOD Swiss Cheese 4 (GLIU_IOD_SC4)	00000000_00000000h	Page 220
510100EFh	R/W	IOD Swiss Cheese 5 (GLIU_IOD_SC5)	00000000_00000000h	Page 220
510100F0h	R/W	IOD Swiss Cheese 6 (GLIU_IOD_SC6)	00000000_00000000h	Page 220
510100F1h	R/W	IOD Swiss Cheese 7 (GLIU_IOD_SC7)	00000000_00000000h	Page 220
510100F2h-510100FFh	R/W	Reserved (RSVD)	00000000_00000000h	---

Downloaded from Arrow.com.

6.1.1 Standard GeodeLink™ Device (GLD) MSRs

6.1.1.1 GLD Capabilities MSR (GLIU_GLD_MSR_CAP)

MSR Address 51010000h
Type RO
Reset Value 00000000_005015xxh

GLIU_GLD_MSR_CAP Register Map

63	62	61	60	59	58	57	56	55	54	53	52	51	50	49	48	47	46	45	44	43	42	41	40	39	38	37	36	35	34	33	32
RSVD																															
31	30	29	28	27	26	25	24	23	22	21	20	19	18	17	16	15	14	13	12	11	10	9	8	7	6	5	4	3	2	1	0
RSVD								DEV_ID																REV_ID							

GLIU_GLD_MSR_CAP Bit Descriptions

Bit	Name	Description
63:24	RSVD	**Reserved.** Reads return 0.
23:8	DEV_ID	**Device ID.** Identifies module.
7:0	REV_ID	**Revision ID.** Identifies module revision. See *AMD Geode™ CS5536 Companion Device Specification Update* for value.

6.1.1.2 GLD Master Configuration MSR (GLIU_GLD_MSR_CONFIG)

MSR Address 51010001h
Type R/W
Reset Value 0000000_00000004h

GLIU_GLD_MSR_CONFIG Register Map

63	62	61	60	59	58	57	56	55	54	53	52	51	50	49	48	47	46	45	44	43	42	41	40	39	38	37	36	35	34	33	32
RSVD																															
31	30	29	28	27	26	25	24	23	22	21	20	19	18	17	16	15	14	13	12	11	10	9	8	7	6	5	4	3	2	1	0
RSVD																													SUBP		

GLD_MSR_CONFIG Bit Descriptions

Bit	Name	Description
63:3	RSVD	**Reserved.** Write as read.
2:0	SUBP	**Subtractive Port.** For all negative decode requests. 000: Port 0 (GLIU) 100: Port 4 (DD) 001: Port 1 (GLPCI_SB) 101: Port 5 (ACC) 010: Port 2 (USB) 110: Port 6 (Not Used) 011: Port 3 (IDE) 111: Port 7 (GLCP) **Note:** The reset value of this register should not be changed.

Downloaded from Arrow.com.

6.1.1.3 GLD SMI MSR (GLIU_GLD_MSR_SMI)

MSR Address 51010002h
Type R/W
Reset Value 00000000_00000001h

The flags are set by internal conditions. The internal conditions are enabled if the EN bit is 0. Reading the FLAG bit returns the value; writing 1 clears the flag; writing 0 has no effect. (See Section 4.7.3 "MSR Address 2: SMI Control" on page 74 for further SMI and ASMI generation details.)

GLIU_GLD_MSR_SMI Register Map

63	62	61	60	59	58	57	56	55	54	53	52	51	50	49	48	47	46	45	44	43	42	41	40	39	38	37	36	35	34	33	32
RSVD																												STATCNT2_ASMI_FLAG	STATCNT1_ASMI_FLAG	STATCNT0_ASMI_FLAG	SSMI_FLAG
31	30	29	28	27	26	25	24	23	22	21	20	19	18	17	16	15	14	13	12	11	10	9	8	7	6	5	4	3	2	1	0
RSVD																												STATCNT2_ASMI_EN	STATCNT1_ASMI_EN	STATCNT0_ASMI_EN	SSMI_EN

GLIU_GLD_MSR_SMI Bit Descriptions

Bit	Name	Description
63:36	RSVD	**Reserved.** Write as read.
35	STATCNT2_ ASMI_FLAG	**Statistic Counter 2 ASMI Flag.** If high, records that an ASMI was generated due to a Statistic Counter 2 (MSR 510100A8h) event. Write 1 to clear; writing 0 has no effect. STATCNT2_ASMI_EN (bit 3) must be low to generate ASMI and set flag.
34	STATCNT1_ ASMI_FLAG	**Statistic Counter 1 ASMI Flag.** If high, records that an ASMI was generated due to a Statistic Counter 1 (MSR 510100A4h) event. Write 1 to clear; writing 0 has no effect. STATCNT1_ASMI_EN (bit 2) must be low to generate ASMI and set flag.
33	STATCNT0_ ASMI_FLAG	**Statistic Counter 0 SMI Flag.** If high, records that an ASMI was generated due to a Statistic Counter 0 (MSR 510100A0h) event. Write 1 to clear; writing 0 has no effect. STATCNT0_ASMI_EN (bit 1) must be low to generate ASMI and set flag.
32	SSMI_FLAG	**SSMI Flag.** If high, records that an SSMI was generated due to a received event. Event sources are: • Illegal request type to GLIU (Port 0), meaning anything other than MSR read/write, debug request, and null. • A self-referencing packet (i.e., a packet sent to the GLIU that finds its destination port is the source port). • The destination of the packet is to a port where the GLIU slave for that port has been disabled. • Trap on a descriptor with device port set to 0. This is the typical operational use of this bit. The data returned with such a trap is the value 0. Write 1 to clear; writing 0 has no effect. SSMI_EN (bit 0) must be low to generate SSMI and set flag.

Downloaded from Arrow.com.

GLIU_GLD_MSR_SMI Bit Descriptions (Continued)

Bit	Name	Description
31:4	RSVD	**Reserved.** Write as read.
3	STATCNT2_ ASMI_EN	**Statistic Counter 2 ASMI Enable.** Write 0 to enable STATCNT2_ASMI_FLAG (bit 35) and to allow a Statistic Counter 2 (MSR 510100A8h) event to generate an ASMI.
2	STATCNT1_ ASMI_EN	**Statistic Counter 1 ASMI Enable.** Write 0 to enable STATCNT1_ASMI_FLAG (bit 34) and to allow a Statistic Counter 1 (MSR 510100A4h) event to generate an ASMI.
1	STATCNT0_ ASMI_EN	**Statistic Counter 0 ASMI Enable.** Write 0 to enable STATCNT0_ASMI_FLAG (bit 33) and to allow a Statistic Counter 0 (MSR 510100A0h) event to generate an ASMI.
0	SSMI_EN	**SSMI Enable.** Write 0 to enable SSMI_FLAG (bit 32) and to allow a received SSMI event to generate an SSMI. (See bit 32 description for SSMI event sources.)

6.1.1.4 GLD Error MSR (GLIU_GLD_MSR_ERROR)

MSR Address 51010003h
Type R/W
Reset Value 00000000_00000001h

The flags are set by internal conditions. The internal conditions are enabled if the EN bit is 0. Reading the FLAG bit returns the value; writing 1 clears the flag; writing 0 has no effect. (See Section 4.7.4 "MSR Address 3: Error Control" on page 78 for further details.)

GLIU_GLD_MSR_ERROR Register Map

63	62	61	60	59	58	57	56	55	54	53	52	51	50	49	48	47	46	45	44	43	42	41	40	39	38	37	36	35	34	33	32
RSVD																				DACMP_ERR_FLAG	RSVD			RQCOMP_ERR_FLAG	RSVD	STATCNT2_ERR_FLAG	STATCNT1_ERR_FLAG	STATCNT0_ERR_FLAG	SSMI_ERR_FLAG	UNEXP_ADD_ERR_FLAG	UNEXP_TYPE_ERR_FLAG
31	30	29	28	27	26	25	24	23	22	21	20	19	18	17	16	15	14	13	12	11	10	9	8	7	6	5	4	3	2	1	0
RSVD																				DACMP_ERR_EN	RSVD			RQCOMP_ERR_EN	RSVD	STATCNT2_ERR_EN	STATCNT1_ERR_EN	STATCNT0_ERR_EN	SSMI_ERR_EN	UNEXP_ADD_ERR_EN	UNEXP_TYPE_ERR_EN

GLIU_GLD_MSR_ERROR Bit Descriptions

Bit	Name	Description
63:44	RSVD	**Reserved.** Write as read.
43	DACOMP_ ERR_FLAG	**Data Comparator Error Flag.** If high, records that an ERR was generated due to a Data Comparator (DA_COMP_VAL_LO / DA_COMP_VAL_HI, MSR 510100D0h / 510100D1h) event. Write 1 to clear; writing 0 has no effect. DACOMP_ERR_EN (bit 11) must be low to generate ERR and set flag.
42:40	RSVD	**Reserved.** Write as read.

Downloaded from Arrow.com.

GLIU_GLD_MSR_ERROR Bit Descriptions (Continued)

Bit	Name	Description
39	RQCOMP_ ERR_FLAG	**Request Comparator Error Flag.** If high, records that an ERR was generated due to a Request Comparator 0 (RQ_COMP_VAL, MSR 510100C0h) event. Write 1 to clear; writing 0 has no effect. RQCOMP_ERR_EN (bit 7) must be low to generate ERR and set flag.
38	RSVD	**Reserved.** Write as read.
37	STATCNT2_ ERR_FLAG	**Statistic Counter 2 Error Flag.** If high, records that an ERR was generated due to a Statistic Counter 2 (MSR 510100A8h) event. Write 1 to clear; writing 0 has no effect. STATCNT2_ERR_EN (bit 5) must be low to generate ERR and set flag.
36	STATCNT1_ ERR_FLAG	**Statistic Counter 1 Error Flag.** If high, records that an ERR was generated due to a Statistic Counter 1 (MSR 510100A4h) event. Write 1 to clear; writing 0 has no effect. STATCNT2_ERR_EN (bit 4) must be low to generate ERR and set flag.
35	STATCNT0_ ERR_FLAG	**Statistic Counter 0 Error Flag.** If high, records that an ERR was generated due to a Statistic Counter 0 (MSR 510100A4h) event. Write 1 to clear; writing 0 has no effect. STATCNT0_ERR_EN (bit 3) must be low to generate ERR and set flag.
34	SSMI_ERR_ FLAG	**SSMI Error Flag.** If high, records that an ERR was generated due an unhandled SSMI (synchronous error). Write 1 to clear; writing 0 has no effect. SSMI_ERR_EN (bit 2) must be low to generate ERR and set flag. (Note 1)
33	UNEXP_ADD_ ERR_FLAG	**Unexpected Address Error Flag.** If high, records that an ERR was generated due an unexpected address (synchronous error). Write 1 to clear; writing 0 has no effect. UNEXP_ADD_ERR_EN (bit 1) must be low to generate ERR and set flag. (Note 1)
32	UNEXP_TYPE _ERR_FLAG	**Unexpected Type Error Flag.** If high, records that an ERR was generated due an unexpected type (synchronous error). Write 1 to clear; writing 0 has no effect. UNEXP_TYPE_ERR_EN (bit 0) must be low to generate ERR and set flag. (Note 1)
31:12	RSVD	**Reserved.** Write as read.
11	DACOMP_ ERR_EN	**Data Comparator Error Enable.** Write 0 to enable DACOMP_ERR_FLAG (bit 43) and to allow a Data Comparator (DA_COMP_VAL_LO / DA_COMP_VAL_HI, MSR 510100D0h / 510100D1h) event to generate an ERR and set flag.
10:8	RSVD	**Reserved.** Write as read.
7	RQCOMP_ ERR_EN	**Request Comparator Error Enable.** Write 0 to enable RQCOMP_ERR_FLAG (bit 39) and to allow a Request Comparator (RQ_COMP_VAL, MSR 510100C0h) event to generate an ERR.
6	RSVD	**Reserved.** Write as read.
5	STATCNT2_ ERR_EN	**Statistic Counter 2 Error Enable.** Write 0 to enable STATCNT2_ERR_FLAG (bit 37) and to allow a Statistic Counter 2 (MSR 510100A8h) event to generate an ERR.
4	STATCNT1_ ERR_EN	**Statistic Counter 1 Error Enable.** Write 0 to enable STATCNT1_ERR_FLAG (bit 36) and to allow a Statistic Counter 1 (MSR 510100A4h) event to generate an ERR.
3	STATCNT0_ ERR_EN	**Statistic Counter 0 Error Enable.** Write 0 to enable STATCNT0_ERR_FLAG (bit 35) and to allow a Statistic Counter 0 (MSR 510100A0h) event to generate an ERR.
2	SSMI_ERR_ EN	**SSMI Error Enable.** Write 0 to enable SSMI_ERR_FLAG (bit 34) and to allow the unhandled SSMI (synchronous error) event to generate an ERR.
1	UNEXP_ADD_ ERR_EN	**Unexpected Address Error Enable.** Write 0 to enable UNEXP_ADD_ERR_FLAG (bit 33) and to allow the unexpected address (synchronous error) event to generate an ERR.
0	UNEXP_TYPE _ERR_EN	**Unexpected Type Error Enable.** Write 0 to enable UNEXP_TYPE_ERR_FLAG (bit 32) and to allow the unexpected type (synchronous error) event to generate an ERR.

Note 1. These are synchronous errors, that is, they do not result in the assertion of the GeodeLink ERR signal but instead set the Exception bit in the response packet.

Downloaded from Arrow.com.

6.1.1.5 GLD Power Management MSR (GLIU_GLD_MSR_PM)

MSR Address 51010004h
Type R/W
Reset Value 00000000_00000000h

GLIU_GLD_MSR_PM Register Map

63	62	61	60	59	58	57	56	55	54	53	52	51	50	49	48	47	46	45	44	43	42	41	40	39	38	37	36	35	34	33	32
RSVD																															
31	30	29	28	27	26	25	24	23	22	21	20	19	18	17	16	15	14	13	12	11	10	9	8	7	6	5	4	3	2	1	0
RSVD																												PMODE1		PMODE0	

GLIU_GLD_MSR_PM Bit Descriptions

Bit	Name	Description
63:4	RSVD	**Reserved.** Write as read.
3:2	PMODE1	**Power Mode 1.** Statistics and Time Slice Counters. 00: Disable clock gating. Clocks are always on. 01: Enable active hardware clock gating. Clock goes off whenever this module's circuits are not busy. 10: Reserved. 11: Reserved.
1:0	PMODE0	**Power Mode 0.** Online GLIU logic. 00: Disable clock gating. Clocks are always on. 01: Enable active hardware clock gating. Clock goes off whenever this module's circuits are not busy. 10: Reserved. 11: Reserved.

6.1.1.6 GLD Diagnostic MSR (GLIU_GLD_MSR_DIAG)

MSR Address 51010005h
Type R/W
Reset Value 00000000_00000000h

This register is reserved for internal use by AMD and should not be written to.

Downloaded from Arrow.com.

6.1.2 P2D Descriptor MSRs

6.1.2.1 P2D Base Mask Descriptors (GLIU_P2D_BM[x])

P2D Base Mask Descriptor 0 (GLIU_P2D_BM0)
MSR Address 51010020h
Type R/W
Reset Value 000000FF_FFF00000h

P2D Base Mask Descriptor 1 (GLIU_P2D_BM1)
MSR Address 51010021h
Type R/W
Reset Value 000000FF_FFF00000h

P2D Base Mask Descriptor 2 (GLIU_P2D_BM2)
MSR Address 51010022h
Type R/W
Reset Value 000000FF_FFF00000h

P2D Base Mask Descriptor 3 (GLIU_P2D_BM3)
MSR Address 51010025h
Type R/W
Reset Value 000000FF_FFF00000h

P2D Base Mask Descriptor 4 (GLIU_P2D_BM4)
MSR Address 51010026h
Type R/W
Reset Value 000000FF_FFF00000h

These registers set up the Physical To Device Base Mask descriptors for determining an address hit.

GLIU_P2D_BM[x] Register Map

63	62	61	60	59	58	57	56	55	54	53	52	51	50	49	48	47	46	45	44	43	42	41	40	39	38	37	36	35	34	33	32
PDID1_BM			PCMP_BIZ_BM	RSVD																				PBASE_BM							
31	30	29	28	27	26	25	24	23	22	21	20	19	18	17	16	15	14	13	12	11	10	9	8	7	6	5	4	3	2	1	0
PBASE_BM												PMASK_BM																			

GLIU_P2D_BM[x] Bit Descriptions

Bit	Name	Description
63:61	PDID_BM	**Physical Descriptor Destination ID.** These bits define which port to route the request to if it is a hit based on the other settings in this register. 000: Port 0 (GLIU) 001: Port 1 (GLPCI_SB) 010: Port 2 (USB) 011: Port 3 (IDE) 100: Port 4 (DD) 101: Port 5 (ACC) 110: Port 6 (Not Used) 111: Port 7 (GLCP)
60	PCMP_BIZ_BM	**Physical Compare BIZZARO Flag.** 0: Consider only transactions whose BIZZARO flag is low as a potentially valid address hit. A low BIZZARO flag indicates a normal transaction cycle such as a memory or I/O. 1: Consider only transactions whose BIZZARO flag is high as a potentially valid address hit. A high BIZZARO flag indicates a 'special' transaction, such as a PCI Shutdown or Halt cycle
59:40	RSVD	**Reserved.** Write as read.
39:20	PBASE_BM	**Physical Memory Address Base.** These bits form the matching value against which the masked value of the physical address bits [31:12] are directly compared. If a match is found, then a hit is declared, depending on the setting of the BIZZARO flag comparator.
19:0	PMASK_BM	**Physical Memory Address Mask.** These bits are used to mask physical address bits [31:12] for the purposes of this hit detection.

Downloaded from Arrow.com.

6.1.2.2 P2D Base Mask KEL Descriptors (GLIU_P2D_BMK[x])

P2D Base Mask KEL Descriptor 0 (GLIU_P2D_BMK0)

MSR Address	51010023h
Type	R/W
Reset Value	000000FF_FFF00000h

P2D Base Mask KEL Descriptor 1 (GLIU_P2D_BMK1)

MSR Address	51010024h
Type	R/W
Reset Value	000000FF_FFF00000h

This is a special version of a P2D_BM descriptor to support routing the USB Keyboard Emulation Logic (KEL) native registers to the default port. The default port device on the CS5536 companion device contains the KEL.

GLIU_P2D_BMK[x] Register Map

63	62	61	60	59	58	57	56	55	54	53	52	51	50	49	48	47	46	45	44	43	42	41	40	39	38	37	36	35	34	33	32
PDID1_BMK			PCMP_BIZ_BMK	RSVD																				PBASE_BMK							
31	30	29	28	27	26	25	24	23	22	21	20	19	18	17	16	15	14	13	12	11	10	9	8	7	6	5	4	3	2	1	0
PBASE_BMK												PMASK_BMK																			

GLIU_P2D_BMK[x] Bit Descriptions

Bit	Name	Description
63:61	PDID1_BMK	**Physical Descriptor Destination ID. Descriptor Destination ID.** These bits define which port to route the request to if it is a hit based on the other settings in this register. 000: Port 0 (GLIU) 001: Port 1 (GLPCI_SB) 010: Port 2 (USB) 011: Port 3 (IDE) 100: Port 4 (DD) 101: Port 5 (ACC) 110: Port 6 (Not Used) 111: Port 7 (GLCP)
60	PCMP_BIZ_BMK	**Physical Compare BIZZARO Flag.** If set, bit 8 of the address must be low for a hit on this descriptor.
59:40	RSVD	**Reserved.** Write as read.
39:20	PBASE_BMK	**Physical Memory Address Base.**These bits form the matching value against which the masked value of the physical address bits [31:12] are directly compared. If a match is found, then a hit is declared, depending on the setting of the BIZZARO flag comparator.
19:0	PMASK_BMK	**Physical Memory Address Mask.**These bits are used to mask physical address bits [31:12] for the purposes of this hit detection.

Downloaded from Arrow.com.

6.1.3 GLIU Specific MSRs

6.1.3.1 Coherency (GLIU_COH)

MSR Address 51010080h
Type R/W
Reset Value 00000000_00000000h

GLIU_COH Register Map

63	62	61	60	59	58	57	56	55	54	53	52	51	50	49	48	47	46	45	44	43	42	41	40	39	38	37	36	35	34	33	32
RSVD																															
31	30	29	28	27	26	25	24	23	22	21	20	19	18	17	16	15	14	13	12	11	10	9	8	7	6	5	4	3	2	1	0
RSVD																													COHP		

GLIU_COH Bit Descriptions

Bit	Name	Description
63:3	RSVD	**Reserved.** Write as read.
2:0	COHP	**Coherent Device Port.** The port that coherent snoops are routed to. If the coherent device is on the other side of a bridge, the COHP points to the bridge. 000: Port 0 (GLIU) 001: Port 1 (GLPCI_SB) 010: Port 2 (USB) 011: Port 3 (IDE) 100: Port 4 (DD) 101: Port 5 (ACC) 110: Port 6 (Not Used) 111: Port 7 (GLCP)

6.1.3.2 Port Active Enable (GLIU_PAE)

MSR Address 51010081h
Type R/W
Reset Value 00000000_0000FFFFh

GLIU_PAE Register Map

63	62	61	60	59	58	57	56	55	54	53	52	51	50	49	48	47	46	45	44	43	42	41	40	39	38	37	36	35	34	33	32
RSVD																															
31	30	29	28	27	26	25	24	23	22	21	20	19	18	17	16	15	14	13	12	11	10	9	8	7	6	5	4	3	2	1	0
RSVD																PAE0		PAE7		PAE6		PAE5		PAE4		PAE3		PAE2		PAE1	

GLIU_PAE Bit Descriptions

Bit	Name	Description
63:16	RSVD	**Reserved.** Write as read.
15:14	PAE0	**Port Active Enable for Port 0 (GLIU).** 00: OFF - Master transactions are disabled. 01: LOW - Master transactions limited to one outstanding transaction. 10: Reserved. 11: ON - Master transactions enabled with no limitations.
13:12	PAE7	**Port Active Enable for Port 7 (GLCP).** See bits [15:14] for decode.
11:10	PAE6	**Reserved.** Write as read.
9:8	PAE5	**Port Active Enable for Port 5 (ACC).** See bits [15:14] for decode.
7:6	PAE4	**Port Active Enable for Port 4 (DD).** See bits [15:14] for decode.

Downloaded from Arrow.com.

GLIU_PAE Bit Descriptions (Continued)

Bit	Name	Description
5:4	PAE3	**Port Active Enable for Port 3 (IDE).** See bits [15:14] for decode.
3:2	PAE2	**Port Active Enable for Port 2 (USB).** See bits [15:14] for decode.
1:0	PAE1	**Port Active Enable for Port 1 (GLPCI_SB).**

6.1.3.3 Arbitration (GLIU_ARB)

MSR Address 51010082h
Type R/W
Reset Value 00000000_00000000h

GLIU_ARB Register

63	62	61	60	59	58	57	56	55	54	53	52	51	50	49	48	47	46	45	44	43	42	41	40	39	38	37	36	35	34	33	32
RSVD	PIPE_DIS	RSVD																													
31	30	29	28	27	26	25	24	23	22	21	20	19	18	17	16	15	14	13	12	11	10	9	8	7	6	5	4	3	2	1	0
RSVD																															

GLIU_ARB Bit Descriptions

Bit	Name	Description
63	RSVD	**Reserved**. Write as read.
62	PIPE_DIS	**Pipelined Arbitration Disabled.** 0: Pipelined arbitration enabled and the GLIU is not limited to one outstanding transaction. 1: Limit the entire GLIU to one outstanding transaction.
61:0	RSVD	**Reserved**. Write as read.

Downloaded from Arrow.com.

6.1.3.4 Asynchronous SMI (GLIU_ASMI)

MSR Address 51010083h
Type R/W
Reset Value 00000000_00000000h

ASMI is a condensed version of the Port ASMI signals. The EN bits ([15:8]) can be used to prevent a device from issuing an ASMI. A write of 1 to the EN bit disables the device's ASMI. The FLAG bits ([7:0]) are status bits. If high, an ASMI was generated due to the associated device. (See Section 4.1.4 "ASMI and Error" on page 57 for further details.)

GLIU_ASMI Register Map

63	62	61	60	59	58	57	56	55	54	53	52	51	50	49	48	47	46	45	44	43	42	41	40	39	38	37	36	35	34	33	32
RSVD																															
31	30	29	28	27	26	25	24	23	22	21	20	19	18	17	16	15	14	13	12	11	10	9	8	7	6	5	4	3	2	1	0
RSVD																P7_ASMI_EN	RSVD	P5_ASMI_EN	P4_ASMI_EN	P3_ASMI_EN	P2_ASMI_EN	P1_ASMI_EN	P0_ASMI_EN	P7_ASMI_FLAG	RSVD	P5_ASMI_FLAG	P4_ASMI_FLAG	P3_ASMI_FLAG	P2_ASMI_FLAG	P1_ASMI_FLAG	P0_ASMI_FLAG

GLIU_ASMI Bit Descriptions

Bit	Name	Description
63:16	RSVD	**Reserved.**
15	P7_ASMI_EN	**Port 7 (GLCP) Asynchronous SMI Enable.**
14	RSVD	**Reserved.**
13	P5_ASMI_EN	**Port 5 (ACC) Asynchronous SMI Enable.**
12	P4_ASMI_EN	**Port 4 (DD) Asynchronous SMI Enable.**
11	P3_ASMI_EN	**Port 3 (IDE) Asynchronous SMI Enable.**
10	P2_ASMI_EN	**Port 2 (USB) Asynchronous SMI Enable.**
9	P1_ASMI_EN	**Port 1 (GLPCI_SB) Asynchronous SMI Enable.**
8	P0_ASMI_EN	**Port 0 (GLIU) Asynchronous SMI Enable.**
7	P7_ASMI_FLAG (RO)	**Port 7 (GLCP) Asynchronous SMI Flag (Read Only).**
6	RSVD	**Reserved.**
5	P5_ASMI_FLAG (RO)	**Port 5 (ACC) Asynchronous SMI Flag (Read Only).**
4	P4_ASMI_FLAG (RO)	**Port 4 (DD) Asynchronous SMI Flag (Read Only).**
3	P3_ASMI_FLAG (RO)	**Port 3 (IDE) Asynchronous SMI Flag (Read Only).**
2	P2_ASMI_FLAG (RO)	**Port 2 (USB) Asynchronous SMI Flag (Read Only).**
1	P1_ASMI_FLAG (RO)	**Port 1 (GLPCI_SB) Asynchronous SMI Flag (Read Only).**
0	P0_ASMI_FLAG (RO)	**Port 0 (GLIU) Asynchronous SMI Flag (Read Only).**

Downloaded from Arrow.com.

6.1.3.5 Asynchronous Error (GLIU_AERR)

MSR Address 51010084h
Type R/W
Reset Value 00000000_00000000h

ERR is a condensed version of the port (asynchronous) ERR signals. The EN bits ([15:8]) can be used to prevent a device from issuing an ERR. A write of 1 to the EN bit disables the device's ERR. The FLAG bits ([7:0]) are status bits. If high, an ERR was generated due to the associated device. (See Section 4.1.4 "ASMI and Error" on page 57 for further details.)

GLIU_AERR Register Map

63	62	61	60	59	58	57	56	55	54	53	52	51	50	49	48	47	46	45	44	43	42	41	40	39	38	37	36	35	34	33	32
RSVD																															
31	30	29	28	27	26	25	24	23	22	21	20	19	18	17	16	15	14	13	12	11	10	9	8	7	6	5	4	3	2	1	0
RSVD																P7_AERR_EN	RSVD	P5_AERR_EN	P4_AERR_EN	P3_AERR_EN	P2_AERR_EN	P1_AERR_EN	P0_AERR_EN	P7_AERR_FLAG	RSVD	P5_AERR_FLAG	P4_AERR_FLAG	P3_AERR_FLAG	P2_AERR_FLAG	P1_AERR_FLAG	P0_AERR_FLAG

GLIU_AERR Bit Descriptions

Bit	Name	Description
63:16	RSVD	**Reserved.**
15	P7_AERR_EN	**Port 7 (GLCP) Asynchronous Error Enable.**
14	RSVD	**Reserved.**
13	P5_AERR_EN	**Port 5 (ACC) Asynchronous Error Enable.**
12	P4_AERR_EN	**Port 4 (DD) Asynchronous Error Enable.**
11	P3_AERR_EN	**Port 3 (IDE) Asynchronous Error Enable.**
10	P2_AERR_EN	**Port 2 (USB) Asynchronous Error Enable.**
9	P1_AERR_EN	**Port 1 (GLPCI_SB) Asynchronous Error Enable.**
8	P0_AERR_EN	**Port 0 (GLIU) Asynchronous Error Enable.**
7	P7_AERR_FLAG (RO)	**Port 7 (GLCP) Asynchronous Error Flag (Read Only).**
6	RSVD	**Reserved.**
5	P5_AERR_FLAG (RO)	**Port 5 (ACC) Asynchronous Error Flag (Read Only).**
4	P4_AERR_FLAG (RO)	**Port 4 (DD) Asynchronous Error Flag (Read Only).**
3	P3_AERR_FLAG (RO)	**Port 3 (IDE) Asynchronous Error Flag (Read Only).**
2	P2_AERR_FLAG (RO)	**Port 2 (USB) Asynchronous Error Flag (Read Only).**
1	P1_AERR_FLAG (RO)	**Port 1 (GLPCI_SB) Asynchronous Error Flag (Read Only).**
0	P0_AERR_FLAG (RO)	**Port 0 (GLIU) Asynchronous Error Flag (Read Only).**

Downloaded from Arrow.com.

6.1.3.6 Debug (GLIU_DEBUG)

MSR Address 51010085h
Type R/W
Reset Value 00000000_00000004h

GLIU_DEBUG Register Map

63	62	61	60	59	58	57	56	55	54	53	52	51	50	49	48	47	46	45	44	43	42	41	40	39	38	37	36	35	34	33	32
RSVD																															
31	30	29	28	27	26	25	24	23	22	21	20	19	18	17	16	15	14	13	12	11	10	9	8	7	6	5	4	3	2	1	0
RSVD																															

GLIU_DEBUG Bit Descriptions

Bit	Name	Description
63:0	RSVD	**Reserved.** Write as read.

6.1.3.7 Physical Capabilities (GLIU_PHY_CAP)

MSR Address 51010086h
Type RO
Reset Value 327920A0_80000005h

This register provides the resources available in the CS5536 companion device.

GLIU_PHY_CAP Register Map

63	62	61	60	59	58	57	56	55	54	53	52	51	50	49	48	47	46	45	44	43	42	41	40	39	38	37	36	35	34	33	32
RSVD	NSTAT_CNT			NDBG_DA_CMP			NDBG_RQ_CMP			NPORTS			NCOH			NIOD_SC						NIOD_BM						NP2D_BMK			
31	30	29	28	27	26	25	24	23	22	21	20	19	18	17	16	15	14	13	12	11	10	9	8	7	6	5	4	3	2	1	0
NP2D_BMK	NP2D_SC							NP2D_RO						NP2D_R						NP2D_BMO						NP2D_BM					

Downloaded from Arrow.com.

GLIU_PHY_CAP Bit Descriptions

Bit	Name	Description
63	RSVD	**Reserved.** Returns 0.
62:60	NSTAT_CNT	**Number Of Statistic Counters.** Provides the number of available Statistic Counters.
59:57	NDBG_DA_CMP	**Number Of Data Comparators.** Provides the number of available Data Comparators**.**
56:54	NDBG_RQ_CMP	**Number Of Request Comparators.** Provides the number of available Request Comparators.
53:51	NPORTS	**Number of Ports on the GLIU.** Provides the number of available ports on the GLIU.
50:48	NCOH	**Number of Coherent Devices.** Provides the number of available Coherent Devices.
47:42	NIOD_SC	**Number of IOD_SC Descriptors.** Provides the number of available **I**OD_SC Descriptors.
41:36	NIOD_BM	**Number of IOD_BM Descriptors.** Provides the number of available IOD_BM Descriptors.
35:30	NP2D_BMK	**Number of P2D_BMK Descriptors.** Provides the number of available P2D_BMK Descriptors.
29:24	NP2D_SC	**Number of P2D_SC Descriptors.** Provides the number of available P2D_SC Descriptors
23:18	NP2D_RO	**Number of P2D_RO Descriptors.** Provides the number of available P2D_RO Descriptors.
17:12	NP2D_R	**Number of P2D_R Descriptors.** Provides the number of available P2D_R 'Descriptors.
11:6	NP2D_BMO	**Number of P2D_BMO Descriptors.** Provides the number of available P2D_BMO Descriptors.
5:0	NP2D_BM	**Number of P2D_BM Descriptors.** Provides the number of available P2D_BM Descriptors.

6.1.3.8 N Outstanding Response (GLIU_NOUT_RESP)

MSR Address 51010087h
Type RO
Reset Value 00000000_00000000h (Note 1)

Note 1. Even if the reset value of this register is 0, read it back 00000000_00000100h.

GLIU_NOUT_RESP Register Map

63	62	61	60	59	58	57	56	55	54	53	52	51	50	49	48	47	46	45	44	43	42	41	40	39	38	37	36	35	34	33	32
RSVD																															
31	30	29	28	27	26	25	24	23	22	21	20	19	18	17	16	15	14	13	12	11	10	9	8	7	6	5	4	3	2	1	0
RSVD																															

GLIU_NOUT_RESP Bit Descriptions

Bit	Name	Description
63:0	RSVD	**Reserved.** Returns 0.

Downloaded from Arrow.com.

6.1.3.9 Number of Outstanding Write Data (GLIU_NOUT_WDATA)

MSR Address 51010088h
Type RO
Reset Value 00000000_00000000h

GLIU_NOUT_WDATA Register Map

63	62	61	60	59	58	57	56	55	54	53	52	51	50	49	48	47	46	45	44	43	42	41	40	39	38	37	36	35	34	33	32
RSVD																															
31	30	29	28	27	26	25	24	23	22	21	20	19	18	17	16	15	14	13	12	11	10	9	8	7	6	5	4	3	2	1	0
RSVD																															

GLIU_NOUT_WDATA Bit Descriptions

Bit	Name	Description
63:0	RSVD	**Reserved.** Returns 0.

6.1.3.10 WHO AM I (GLIU_WHOAMI)

MSR Address 5101008Bh
Type RO
Reset Value Configuration Dependent

GLIU_WHOAMI Register Map

63	62	61	60	59	58	57	56	55	54	53	52	51	50	49	48	47	46	45	44	43	42	41	40	39	38	37	36	35	34	33	32
RSVD																															
31	30	29	28	27	26	25	24	23	22	21	20	19	18	17	16	15	14	13	12	11	10	9	8	7	6	5	4	3	2	1	0
RSVD																															

GLIU_WHOAMI Bit Descriptions

Bit	Name	Description
63:0	RSVD	**Reserved.** Returns 0.

6.1.3.11 Slave Disable (GLIU_SLV_DIS)

MSR Address 5101008Ch
Type R/W
Reset Value 00000000_00000040h

GLIU_SLV_DIS Register Map

63	62	61	60	59	58	57	56	55	54	53	52	51	50	49	48	47	46	45	44	43	42	41	40	39	38	37	36	35	34	33	32
RSVD																															
31	30	29	28	27	26	25	24	23	22	21	20	19	18	17	16	15	14	13	12	11	10	9	8	7	6	5	4	3	2	1	0
RSVD																															

GLIU_SLV_DIS Bit Descriptions

Bit	Name	Description
63:0	RSVD	**Reserved.** Write as read.

Downloaded from Arrow.com.

6.1.3.12 Descriptor Statistic Counters (GLIU_STATISTIC_CNT[x])

Descriptor Statistic Counter 0 (GLIU_STATISTIC_CNT0)

MSR Address 510100A0h
Type WO
Reset Value 00000000_00000000h

Descriptor Statistic Counter 1 (GLIU_STATISTIC_CNT1)

MSR Address 510100A4h
Type WO
Reset Value 00000000_00000000h

Descriptor Statistic Counter 2 (GLIU_STATISTIC_CNT2)

MSR Address 510100A8h
Type WO
Reset Value 00000000_00000000h

These registers work in conjunction with the GLIU_STATISTIC_MASK[x] and the GLIU_STATISTIC_ACTION[x] registers. The counters count 'hits' on the P2D and IOD descriptors. The counter behaves as setup in the GLIU_STATISTIC_ACTION[x] register.

GLIU_STATISTIC_CNT[x] Register Map

63	62	61	60	59	58	57	56	55	54	53	52	51	50	49	48	47	46	45	44	43	42	41	40	39	38	37	36	35	34	33	32
LOAD_VAL																															
31	30	29	28	27	26	25	24	23	22	21	20	19	18	17	16	15	14	13	12	11	10	9	8	7	6	5	4	3	2	1	0
CNT																															

GLIU_STATISTIC_CNT[x] Bit Descriptions

Bit	Name	Description
63:32	LOAD_VAL	**Counter Load Value.** A value loaded here is used as the initial Statistics Counter value when a LOAD action occurs or is commanded.
31:0	CNT	**Counter Value.** These bits provide the current counter value when read.

Downloaded from Arrow.com.

6.1.3.13 Descriptor Statistic Mask (GLIU_STATISTIC_MASK[x])

Descriptor Statistic Mask 0 (GLIU_STATISTIC_MASK0)

MSR Address 510100A1h
Type R/W
Reset Value 00000000_00000000h

Descriptor Statistic Mask 1 (GLIU_STATISTIC_MASK1)

MSR Address 510100A5h
Type R/W
Reset Value 00000000_00000000h

Descriptor Statistic Mask 2 (GLIU_STATISTIC_MASK2)

MSR Address 510100A9h
Type R/W
Reset Value 00000000_00000000h

GLIU_STATISTIC_MASK[x] Register Map

63	62	61	60	59	58	57	56	55	54	53	52	51	50	49	48	47	46	45	44	43	42	41	40	39	38	37	36	35	34	33	32
IOD_MASK																															
31	30	29	28	27	26	25	24	23	22	21	20	19	18	17	16	15	14	13	12	11	10	9	8	7	6	5	4	3	2	1	0
P2D_MASK																															

GLIU_STATISTIC_MASK[x] Bit Descriptions

Bit	Name	Description
63:32	IOD_MASK	**Mask for Hits to each IOD.** Hits are determined after the request is arbitrated. A hit is determined by the following logical equation: hit = |(IOD_MASK[n-1:0] & RQ_DESC_HIT[n-1:0] && is_io) | |(P2D_MASK[n-1:0] & RQ_DESC_HIT[n-1:0] && is_mem)
31:0	P2D_MASK	**Mask for Hits to each P2D.** A hit is determined by the following logical equation: hit = |(IOD_MASK[n-1:0] & RQ_DESC_HIT[n-1:0] && is_io) | |(P2D_MASK[n-1:0] & RQ_DESC_HIT[n-1:0] && is_mem)

Downloaded from Arrow.com.

6.1.3.14 Descriptor Statistic Action (GLIU_STATISTIC_ACTION[x])

Descriptor Statistic Action 0 (GLIU_STATISTIC_ACTION0)
MSR Address 510100A2h
Type R/W
Reset Value 00000000_00000000h

Descriptor Statistic Action 1 (GLIU_STATISTIC_ACTION1)
MSR Address 510100A6h
Type R/W
Reset Value 00000000_00000000h

Descriptor Statistic Action 2 (GLIU_STATISTIC_ACTION2)
MSR Address 510100AAh
Type R/W
Reset Value 00000000_00000000h

GLIU_STATISTIC_ACTION[x] Register Map

63	62	61	60	59	58	57	56	55	54	53	52	51	50	49	48	47	46	45	44	43	42	41	40	39	38	37	36	35	34	33	32
RSVD																															
31	30	29	28	27	26	25	24	23	22	21	20	19	18	17	16	15	14	13	12	11	10	9	8	7	6	5	4	3	2	1	0
RSVD								PREDIV																WRAP	ZERO_ERR	ZERO_SMI	ALWAYS_DEC	HIT_ERR	HIT_SMI	HIT_DEC	HIT_LDEN

GLIU_STATISTIC_ACTION[x] Bit Descriptions

Bit	Name	Description
63:24	RSVD	**Reserved.** Write as read.
23:8	PREDIV	**Pre-divider used for ALWAYS_DEC.** The pre-divider is free running and extends the depth of the counter.
7	WRAP	**Decrement Counter Beyond Zero and Wrap.** 0: Disable wrap; counter stops when it reaches zero. 1: Enable wrap; counter decrements through 0 to all ones.
6	ZERO_ERR	**Assert AERR on Cnt = 0.** Assert AERR when STATISTIC_CNT[x] = 0. 0: Disable. 1: Enable.
5	ZERO_SMI	**Assert ASMI on Cnt = 0.** Assert ASMI when STATISTIC_CNT[x] = 0. 0: Disable. 1: Enable.
4	ALWAYS_DEC	**Always Decrement Counter.** If enabled, the counter decrements on every memory clock subject to the prescaler value PREDIV (bits [23:8]). Decrementing continues unless loading is occurring due to another action, or if the counter reaches zero and WRAP (bit 7) is disabled. 0: Disable. 1: Enable.
3	HIT_ERR	**Assert AERR on Descriptor Hit.** This bit causes an asynchronous error to be generated when a matching descriptor hit occurs, or not. The descriptor hits are ANDed with the masks and then all ORed together. 0: Disable. 1: Enable.

Downloaded from Arrow.com.

GLIU_STATISTIC_ACTION[x] Bit Descriptions (Continued)

Bit	Name	Description
2	HIT_SMI	**Assert ASMI on Descriptor Hit.** This bit causes an ASMI to be generated when a matching descriptor hit occurs, or not. The descriptor hits are ANDed with the masks and then all ORed together. 0: Disable. 1: Enable.
1	HIT_DEC	**Decrement Counter on Descriptor Hit.** This bit causes the associated counter to decrement when a matching descriptor hit occurs, or not.The descriptor hits are ANDed with the masks and then all ORed together. 0: Disable. 1: Enable.
0	HIT_LDEN	**Load Counter on Descriptor Hit.** This bit causes the associated counter to reload its LOAD_VAL when a matching descriptor hit occurs, or not.The descriptor hits are ANDed with the masks and then all ORed together. 0: Disable. 1: Enable.

6.1.3.15 Request Compare Value (GLIU_RQ_COMP_VAL)

MSR Address 510100C0h
Type R/W
Reset Value 001FFFFF_FFFFFFFFh

The RQ Compare Value and the RQ Compare Mask enable traps on specific transactions. A hit to the RQ Compare is determined by hit = (RQ_IN & RQ_COMP_MASK) == RQ_COMP_VAL). A hit can trigger the RQ_COMP error sources when they are enabled. The value is compared only after the packet is arbitrated.

GLIU_RQ_COMP_VAL Register Map

63	62	61	60	59	58	57	56	55	54	53	52	51	50	49	48	47	46	45	44	43	42	41	40	39	38	37	36	35	34	33	32
RSVD											RQ_COMPVAL																					
31	30	29	28	27	26	25	24	23	22	21	20	19	18	17	16	15	14	13	12	11	10	9	8	7	6	5	4	3	2	1	0
RQ_COMPVAL																															

GLIU_RQ_COMP_VAL Bit Descriptions

Bit	Name	Description
63:53	RSVD	**Reserved.** Write as read.
52:0	RQ_COMPVAL	**Request Packet Value.** This is the value compared against the logical bit-wise AND of the incoming request packet and the RQ_COMP_MASK in order to determine a hit.

Downloaded from Arrow.com.

6.1.3.16 Request Compare Mask (GLIU_RQ_COMP_MASK)

MSR Address 510100C1h
Type R/W
Reset Value 00000000_00000000h

The RQ Compare Value and the RQ Compare Mask enable traps on specific transactions. A hit to the RQ Compare is determined by hit = (RQ_IN & RQ_COMP_MASK) == RQ_COMP_VAL). A hit can trigger the RQ_COMP error sources when they are enabled. The value is compared only after the packet is arbitrated.

GLIU_RQ_COMP_MASK Register Map

63	62	61	60	59	58	57	56	55	54	53	52	51	50	49	48	47	46	45	44	43	42	41	40	39	38	37	36	35	34	33	32
RSVD											RQ_COMPMASK																				
31	30	29	28	27	26	25	24	23	22	21	20	19	18	17	16	15	14	13	12	11	10	9	8	7	6	5	4	3	2	1	0
RQ_COMPMASK																															

GLIU_RQ_COMP_MASK Bit Descriptions

Bit	Name	Description
63:53	RSVD	**Reserved.** Write as read.
52:0	RQ_COMPMASK	**Request Packet Mask.** This field is bit-wise logically ANDed with the incoming Request Packet before it is compared to the RQ_COMPVAL.

6.1.3.17 Data Compare Value Low (GLIU_DA_COMP_VAL_LO)

MSR Address 510100D0h
Type R/W
Reset Value 00001FFF_FFFFFFFFh

The DA Compare Value and the DA Compare Mask enable traps on specific transactions. A hit to the DA Compare is determined by hit = (DA_IN & DA_COMP_MASK) == DA_COMP_VAL). A hit can trigger the DA_CMP error sources when they are enabled. The value is compared only after the packet is arbitrated.

GLIU_DA_COMP_VAL_LO Register Map

63	62	61	60	59	58	57	56	55	54	53	52	51	50	49	48	47	46	45	44	43	42	41	40	39	38	37	36	35	34	33	32
RSVD																			DALO_COMPVAL												
31	30	29	28	27	26	25	24	23	22	21	20	19	18	17	16	15	14	13	12	11	10	9	8	7	6	5	4	3	2	1	0
DALO_COMPVAL																															

GLIU_DA_COMP_VAL_LO Bit Descriptions

Bit	Name	Description
63:45	RSVD	**Reserved.** Write as read.
44:0	DALO_COMPVAL	**Data Packet Compare Value [44:0].** This field forms the lower portion of the data value that is compared to the logical bit-wise AND of the incoming data value and the data value compare mask in order to determine a hit. The “HI” and “LO” portions of the incoming data, the compare value, and the compare mask, are assembled into complete bit patterns before these operations occur.

Downloaded from Arrow.com.

6.1.3.18 Data Compare Value High (GLIU_DA_COMP_VAL_HI)

MSR Address 510100D1h
Type R/W
Reset Value 0000000F_FFFFFFFFh

The DA Compare Value and the DA Compare Mask enable traps on specific transactions. A hit to the DA Compare is determined by hit = (DA_IN & DA_COMP_MASK) == DA_COMP_VAL). A hit can trigger the DA_CMP error sources when they are enabled. The value is compared only after the packet is arbitrated.

GLIU_DA_COMP_VAL_HI Register Map

63	62	61	60	59	58	57	56	55	54	53	52	51	50	49	48	47	46	45	44	43	42	41	40	39	38	37	36	35	34	33	32
RSVD																												DAHI_COMPVAL			
31	30	29	28	27	26	25	24	23	22	21	20	19	18	17	16	15	14	13	12	11	10	9	8	7	6	5	4	3	2	1	0
DAHI_COMPVAL																															

GLIU_DA_COMP_VAL_HI Bit Descriptions

Bit	Name	Description
63:36	RSVD	**Reserved.** Write as read.
35:0	DAHI_ COMPVAL	**DA Packet Compare Value [80:45].** This field forms the upper portion of the data value that is compared to the logical bit-wise AND of the incoming data value and the data value compare mask in order to determine a hit. The “HI” and “LO” portions of the incoming data, the compare value, and the compare mask, are assembled into complete bit patterns before these operations occur.

Downloaded from Arrow.com.

6.1.3.19 Data Compare Mask Low (GLIU_DA_COMP_MASK_LO)

MSR Address 510100D2h
Type R/W
Reset Value 00000000_00000000h

The DA Compare Value and the DA Compare Mask enable traps on specific transactions. A hit to the DA Compare is determined by hit = (DA_IN & DA_COMP_MASK) == DA_COMP_VAL). A hit can trigger the DA_COMP error sources when they are enabled. The value is compared only after the packet is arbitrated.

GLIU_DA_COMP_MASK_LO Register Map

63	62	61	60	59	58	57	56	55	54	53	52	51	50	49	48	47	46	45	44	43	42	41	40	39	38	37	36	35	34	33	32
RSVD																			DALO_COMPMASK												
31	30	29	28	27	26	25	24	23	22	21	20	19	18	17	16	15	14	13	12	11	10	9	8	7	6	5	4	3	2	1	0
DALO_COMPMASK																															

GLIU_DA_COMP_MASK_LO Bit Descriptions

Bit	Name	Description
63:45	RSVD	**Reserved.** Write as read.
44:0	DALO_COMPMASK	**Data Packet Compare Mask [44:0].** This field forms the lower portion of the data COMPMASK value, that is then bit-wise logically ANDed with the incoming data value before it is compared to the DA_COMPVAL. The “HI” and “LO” portions of the incoming data, the compare value, and the compare mask, are assembled into complete bit patterns before these operations occur.

6.1.3.20 Data Compare Mask High (GLIU_DA_COMP_MASK_HI)

MSR Address 510100D3h
Type R/W
Reset Value 00000000_00000000h

GLIU_DA_COMP_MASK_HI Register

63	62	61	60	59	58	57	56	55	54	53	52	51	50	49	48	47	46	45	44	43	42	41	40	39	38	37	36	35	34	33	32
RSVD																												DAHI_COMPMASK			
31	30	29	28	27	26	25	24	23	22	21	20	19	18	17	16	15	14	13	12	11	10	9	8	7	6	5	4	3	2	1	0
DAHI_COMPMASK																															

GLIU_DA_COMP_MASK_HI Bit Descriptions

Bit	Name	Description
63:36	RSVD	**Reserved.** Write as read.
35:0	DAHI_COMPMASK	**DA Packet Compare Mask [80:45].** This field forms the upper portion of the data COMPMASK value that is then bit-wise logically ANDed with the incoming data value before it is compared to the DA_COMP_VAL. The “HI” and “LO” portions of the incoming data (the compare value and compare mask) are assembled into complete bit patterns before these operations occur.

Downloaded from Arrow.com.

6.1.4 IOD Descriptor MSRs

6.1.4.1 IOD Base Mask Descriptors (GLIU_IOD_BM[x])

IOD Base Mask 0 (GLIU_IOD_BM0)
MSR Address 510100E0h
Type R/W
Reset Value 60000000_1F0FFFF0h

IOD Base Mask 1 (GLIU_IOD_BM1)
MSR Address 510100E1h
Type R/W
Reset Value 000000FF_FFF00000h

IOD Base Mask 2 (GLIU_IOD_BM2)
MSR Address 510100E2h
Type R/W
Reset Value 000000FF_FFF00000h

IOD Base Mask 3 (GLIU_IOD_BM3)
MSR Address 510100E3h
Type R/W
Reset Value 000000FF_FFF00000h

IOD Base Mask 4 (GLIU_IOD_BM4)
MSR Address 510100E4h
Type R/W
Reset Value 000000FF_FFF00000h

IOD Base Mask 5 (GLIU_IOD_BM5)
MSR Address 510100E5h
Type R/W
Reset Value 000000FF_FFF00000h

IOD Base Mask 6 (GLIU_IOD_BM6)
MSR Address 510100E6h
Type R/W
Reset Value 000000FF_FFF00000h

IOD Base Mask 7 (GLIU_IOD_BM7)
MSR Address 510100E7h
Type R/W
Reset Value 000000FF_FFF00000h

IOD Base Mask 8 (GLIU_IOD_BM8)
MSR Address 510100E8h
Type R/W
Reset Value 000000FF_FFF00000h

IOD Base Mask 9 (GLIU_IOD_BM9)
MSR Address 510100E9h
Type R/W
Reset Value 000000FF_FFF00000h

GLIU_IOD_BM[x] Register Map

63	62	61	60	59	58	57	56	55	54	53	52	51	50	49	48	47	46	45	44	43	42	41	40	39	38	37	36	35	34	33	32
IDID_BM			ICMP_BIZ_BM	RSVD																				IBASE_BM							
31	30	29	28	27	26	25	24	23	22	21	20	19	18	17	16	15	14	13	12	11	10	9	8	7	6	5	4	3	2	1	0
IBASE_BM												IMASK_BM																			

GLIU_IOD_BM[x] Bit Descriptions

Bit	Name	Description
63:61	IDID_BM	**I/O Descriptor Destination ID.** These bits define which port to route the request to if it is a hit based on the other settings in this register. 000: Port 0 (GLIU) 001: Port 1 (GLPCI_SB) 010: Port 2 (USB) 011: Port 3 (IDE) 100: Port 4 (DD) 101: Port 5 (ACC) 110: Port 6 (Not Used) 111: Port 7 (GLCP)
60	ICMP_BIZ_BM	**Compare BIZZARO Flag.** 0: Consider only transactions whose BIZZARO flag is low as a potentially valid address hit. A low BIZZARO flag indicates a normal transaction cycle such as a memory or I/O. 1: Consider only transactions whose BIZZARO flag is high as a potentially valid address hit. A high BIZZARO flag indicates a 'special' transaction, such as a PCI Shutdown or Halt cycle.

Downloaded from Arrow.com.

GLIU_IOD_BM[x] Bit Descriptions (Continued)

Bit	Name	Description
59:40	RSVD	**Reserved.** Write as read.
39:20	IBASE_BM	**Physical I/O Address Base.**These bits form the matching value against which the masked value of the physical address, bits [19:0] are directly compared. If a match is found, then a hit is declared, depending on the setting of the BIZZARO flag comparator.
19:0	IMASK_BM	**Physical I/O Address Mask.** These bits are used to mask address bits [39:20] for the purposes of this hit detection.

6.1.4.2 IOD Swiss Cheese Descriptors (GLIU_IOD_SC[x])

IOD Swiss Cheese 0 (GLIU_IOD_SC0)
MSR Address 510100EAh
Type R/W
Reset Value 60000000_403003F0h

IOD Swiss Cheese 1 (GLIU_IOD_SC1)
MSR Address 510100EBh
Type R/W
Reset Value 00000000_00000000h

IOD Swiss Cheese 2 (GLIU_IOD_SC2)
MSR Address 510100ECh
Type R/W
Reset Value 00000000_00000000h

IOD Swiss Cheese 3 (GLIU_IOD_SC3)
MSR Address 510100EDh
Type R/W
Reset Value 00000000_00000000h

IOD Swiss Cheese 4 (GLIU_IOD_SC4)
MSR Address 510100EEh
Type R/W
Reset Value 00000000_00000000h

IOD Swiss Cheese 5 (GLIU_IOD_SC5)
MSR Address 510100EFh
Type R/W
Reset Value 00000000_00000000h

IOD Swiss Cheese 6 (GLIU_IOD_SC6)
MSR Address 510100F0h
Type R/W
Reset Value 00000000_00000000h

IOD Swiss Cheese 7 (GLIU_IOD_SC7)
MSR Address 510100F1h
Type R/W
Reset Value 00000000_00000000h

Each of these eight descriptors checks that the physical address supplied by the device's request on the address bits is equal to the IBASE_SC field of descriptor register bits and that the enable write or read conditions given by the descriptor register fields WEN and REN respectively match the request type and enable fields given on the physical address bits of the device's request. If the above matches, then the descriptor has a hit condition and routes the received address to the programmed destination ID, IDID1_SC field of the descriptor register bits.

GLIU_IOD_SC[x] Register

63	62	61	60	59	58	57	56	55	54	53	52	51	50	49	48	47	46	45	44	43	42	41	40	39	38	37	36	35	34	33	32
IDID_SC			ICMP_BIZ_SC	RSVD																											
31	30	29	28	27	26	25	24	23	22	21	20	19	18	17	16	15	14	13	12	11	10	9	8	7	6	5	4	3	2	1	0
EN_SC								RSVD		WEN_SC	REN_SC	IBASE_SC																	RSVD		

Downloaded from Arrow.com.

GLIU_IOD_SC Bit Descriptions

Bit	Name	Description
63:61	IDID_SC	**I/O Descriptor Destination ID.** Encoded port number of the destination of addresses that produce a hit based on the other fields in this descriptor. 000: Port 0 (GLIU) 001: Port 1 (GLPCI_SB) 010: Port 2 (USB) 011: Port 3 (IDE) 100: Port 4 (DD) 101: Port 5 (ACC) 110: Port 6 (Not Used) 111: Port 7 (GLCP)
60	ICMP_BIZ_SC	**Compare BIZZARO Flag.** Used to check that the BIZZARO flag of the request is equal to the ICMP_BIZ_SC bit. If a match does not occur, then the incoming request cannot generate a hit. The BIZZARO flag, if set in the incoming request, signifies a “special’ cycle such as a PCI Shutdown or Halt.
59:32	RSVD	**Reserved.** Write as read.
31:24	EN_SC	**Enable for Hits to IDID_SC else SUBP.** bit 0, if set, hit on I/O Address Base plus 0. bit 1, if set, hit on I/O Address Base plus 1. : bit 7, if set, hit on I/O Address Base plus 7.
23:22	RSVD	**Reserved.**
21	WEN_SC	**Descriptor Hits IDID_SC on Write Request Types else SUBP.** If set, causes the incoming request to be routed to the port specified in IDID_SC (bits [63:61]) if the incoming request is a WRITE type.
20	REN_SC	**Descriptors Hit IDID_SC on Read Request Types else SUBP.** If set, causes the incoming request to be routed to the port specified in IDID_SC (bits [63:61]) if the incoming request is a READ type.
19:0	IBASE_SC	**I/O Address Base.** This field forms the basis of comparison with the incoming checks that the physical address supplied by the device’s request on address bits [31:18] are equal to the PBASE field of descriptor register bits [13:0]
2:0	RSVD	**Reserved.** Write as read.

Downloaded from Arrow.com.

6.2 GeodeLink™ PCI South Bridge Register Descriptions

The GeodeLink™ PCI South Bridge (GLPCI_SB) register set consists of:

- Standard GeodeLink™ Device (GLD) MSRs
- GLPCI_SB Specific MSRs
- PCI Configuration Registers

The MSRs (both Standard and GLPCI_SB Specific) are accessed via the RDMSR and WRMSR processor instructions. The MSR address is derived from the perspective of the CPU Core. See Section 4.2 "MSR Addressing" on page 60 for more details on MSR addressing.

Additionally, all GLPCI_SB Specific MSRs can be accessed through both the PCI and GLIU interfaces. See Section 6.2.3 "PCI Configuration Registers" on page 234 for details.

The PCI configuration registers can only be accessed through the PCI interface and include:

- The first 16 bytes of standard PCI configuration registers.
- MSR access registers:
  — PMCTRL
  — PMADDR
  — PMDATA0
  — PMDATA1

Tables 6-5 through 6-7 are register summary tables that include reset values and page references where the bit descriptions are provided.

Table 6-5. Standard GeodeLink™ Device MSRs Summary

MSR Address	Type	Register	Reset Value	Reference
51000000h	RO	GLD Capabilities MSR (GLPCI_GLD_MSR_CAP)	00000000_005055xxh	Page 224
51000001h	R/W	GLD Master Configuration MSR (GLPCI_GLD_MSR_CONFIG)	00000000_00000000h	Page 224
51000002h	R/W	GLD SMI MSR (GLPCI_GLD_MSR_SMI)	00000000_00000000h	Page 225
51000003h	R/W	GLD Error MSR (GLPCI_GLD_MSR_ERROR)	00000000_00000000h	Page 226
51000004h	R/W	GLD Power Management MSR (GLPCI_GLD_MSR_PM)	00000000_00000000h	Page 227
51000005h	R/W	GLD Diagnostic MSR (GLPCI_GLD_MSR_DIAG)	00000000_00000000h	Page 228

Table 6-6. GLPCI_SB Specific MSRs Summary

MSR Address	Type	Register	Reset Value	Reference
51000010h	R/W	Global Control (GLPCI_CTRL)	44000030_00000003h	Page 229
51000020h	R/W	Region 0 Configuration (GLPCI_R0)	00000000_00000000h	Page 232
51000021h	R/W	Region 1 Configuration (GLPCI_R1)	00000000_00000000h	Page 232
51000022h	R/W	Region 2 Configuration (GLPCI_R2)	00000000_00000000h	Page 232
51000023h	R/W	Region 3 Configuration (GLPCI_R3)	00000000_00000000h	Page 232
51000024h	R/W	Region 4 Configuration (GLPCI_R4)	00000000_00000000h	Page 232
51000025h	R/W	Region 5 Configuration (GLPCI_R5)	00000000_00000000h	Page 232
51000026h	R/W	Region 6 Configuration (GLPCI_R6)	00000000_00000000h	Page 232
51000027h	R/W	Region 7 Configuration (GLPCI_R7)	00000000_00000000h	Page 232
51000028h	R/W	Region 8 Configuration (GLPCI_R8)	00000000_00000000h	Page 232
51000029h	R/W	Region 9 Configuration (GLPCI_R9)	00000000_00000000h	Page 232
5100002Ah	R/W	Region 10 Configuration (GLPCI_R10)	00000000_00000000h	Page 232
5100002Bh	R/W	Region 11 Configuration (GLPCI_R11)	00000000_00000000h	Page 232

Downloaded from Arrow.com.

Table 6-6. GLPCI_SB Specific MSRs Summary

MSR Address	Type	Register	Reset Value	Reference
5100002Ch	R/W	Region 12 Configuration (GLPCI_R12)	00000000_00000000h	Page 232
5100002Dh	R/W	Region 13 Configuration (GLPCI_R13)	00000000_00000000h	Page 232
5100002Eh	R/W	Region 14 Configuration (GLPCI_R14)	00000000_00000000h	Page 232
5100002Fh	R/W	Region 15 Configuration (GLPCI_R15)	00000000_00000000h	Page 232
51000030h	RO	PCI Configuration Space Header Byte 0-3 (GLPCI_PCIHEAD_BYTE0-3)	00000000_208F1022h	Page 233
51000031h	RO	PCI Configuration Space Header Byte 4-7 (GLPCI_PCIHEAD_BYTE4-7)	00000000_00000000h	Page 233
51000032h	RO	PCI Configuration Space Header Byte 8-B (GLPCI_PCIHEAD_BYTE8-B)	00000000_FF0000xxh	Page 233
51000033h	RO	PCI Configuration Space Header Byte C-F (GLPCI_PCIHEAD_BYTEC-F)	00000000_00000000h	Page 234

Table 6-7. PCI Configuration Registers

Index	Type	Width (Bits)	Name	Reset Value	Reference
00h	RO	32 (Note 1)	PCI Configuration Space Header Byte 0-3 (GLPCI_PCI_HEAD_BYTE0-3)	208F1022h	Page 234
04h	RO	32 (Note 1)	PCI Configuration Space Header Byte 4-7 (GLPCI_PCI_HEAD_BYTE4-7)	00000000h	Page 235
08h	RO	32 (Note 1)	PCI Configuration Space Header Byte 8-B (GLPCI_PCI_HEAD_BYTE8-B)	FF0000xxh	Page 235
0Ch	RO	32 (Note 1)	PCI Configuration Space Header Byte C-F (GLPCI_PCI_HEAD_BYTEC-F)	00000000h	Page 236
F0h	R/W	32	PCI MSR Control (GLPCI_PMCTRL)	00000001h	Page 236
F4h	R/W	32	PCI MSR Address (GLPCI_PMADDR)	00000000h	Page 237
F8h	R/W	32	PCI MSR Data 0 (GLPCI_PMDATA0)	00000000h	Page 237
FCh	R/W	32	PCI MSR Data 1 (GLPCI_PMDATA1)	00000000h	Page 238

Note 1. Read address bits [1:0] are ignored and taken as 00.

Downloaded from Arrow.com.

6.2.1 Standard GeodeLink™ Device (GLD) MSRs

6.2.1.1 GLD Capabilities MSR (GLPCI_GLD_MSR_CAP)

MSR Address 51000000h
Type RO
Reset Value 00000000_005055xxh

GLPCI_GLD_MSR_CAP Register Map

63	62	61	60	59	58	57	56	55	54	53	52	51	50	49	48	47	46	45	44	43	42	41	40	39	38	37	36	35	34	33	32
RSVD																															
31	30	29	28	27	26	25	24	23	22	21	20	19	18	17	16	15	14	13	12	11	10	9	8	7	6	5	4	3	2	1	0
RSVD								DEV_ID																REV_ID							

GLPCI_GLD_MSR_CAP Bit Descriptions

Bit	Name	Description
63:24	RSVD	**Reserved.** Reads as 0.
23:8	DEV_ID	**Device ID.** Identifies module (2051h).
7:0	REV_ID	**Revision ID.** Identifies module revision. See *AMD Geode™ CS5536 Companion Device Specification Update* document for value.

6.2.1.2 GLD Master Configuration MSR (GLPCI_GLD_MSR_CONFIG)

MSR Address 51000001h
Type R/W
Reset Value 00000000_00000000h

GLCPI_GLD_MSR_CONFIG Register Map

63	62	61	60	59	58	57	56	55	54	53	52	51	50	49	48	47	46	45	44	43	42	41	40	39	38	37	36	35	34	33	32
RSVD																															
31	30	29	28	27	26	25	24	23	22	21	20	19	18	17	16	15	14	13	12	11	10	9	8	7	6	5	4	3	2	1	0
RSVD																									PRI			RSVD	PID		

GLPCI_GLD_MSR_CONFIG Bit Descriptions

Bit	Name	Description
63:7	RSVD (RO)	**Reserved (Read Only).** Returns 0.
6:4	PRI	**Priority Level.** Always write 0.
3	RSVD (RO)	**Reserved (Read Only).** Returns 0.
2:0	PID	**Priority ID.** Always write 0.

Downloaded from Arrow.com.

6.2.1.3 GLD SMI MSR (GLPCI_GLD_MSR_SMI)

MSR Address 51000002h
Type R/W
Reset Value 00000000_00000000h

The flags are set by internal conditions. The internal conditions are enabled if the EN bit is 1. Reading the FLAG bit returns the value; writing 1 clears the flag; writing 0 has no effect. (See Section 4.7.3 "MSR Address 2: SMI Control" on page 74 for further SMI/ASMI generation details.)

GLPCI_GLD_MSR_SMI Register Map

63	62	61	60	59	58	57	56	55	54	53	52	51	50	49	48	47	46	45	44	43	42	41	40	39	38	37	36	35	34	33	32
RSVD																															
31	30	29	28	27	26	25	24	23	22	21	20	19	18	17	16	15	14	13	12	11	10	9	8	7	6	5	4	3	2	1	0
RSVD									TAS_ASMI_FLAG	PAR_ASMI_FLAG	SYSE_ASMI_FLAG	EXCEP_ASMI_FLAG	SSMI_ASMI_FLAG	TAR_ASMI_FLAG	MAR_ASMI_FLAG	RSVD									TAS_ASMI_EN	PAR_ASMI_EN	SYSE_ASMI_EN	EXCEP_ASMI_EN	SSMI_ASMI_EN	TAR_ASMI_EN	MAR_ASMI_EN		

GLPCI_GLD_MSR_SMI Bit Descriptions

Bit	Name	Description
63:23	RSVD (RO)	**Reserved (Read Only).** Returns 0.
22	TAS_ASMI_ FLAG	**Target Abort Signaled ASMI Flag.** If high, records that an ASMI was generated due to the signaling of a target abort on the PCI bus. Write 1 to clear; writing 0 has no effect. TA_ASMI_EN (bit 6) must be high to generate ASMI and set flag.
21	PAR_ASMI_ FLAG	**Parity Error ASMI Flag.** If high, records that an ASMI was generated due to the detection of a PCI bus parity error. Write 1 to clear; writing 0 has no effect. PAR_ASMI_EN (bit 5) must be high to generate ASMI and set flag.
20	SYSE_ASMI_ FLAG	**System Error ASMI Flag.** If high, records that an ASMI was generated due to the detection of a PCI bus system error. Write 1 to clear; writing 0 has no effect. SYSE_ASMI_EN (bit 4) must be high to generate ASMI and set flag.
19	EXCEP_ASMI_ FLAG	**Exception Bit Flag.** If high, records that an ASMI was generated due to the EXCEP bit being set in the received GLIU read response packet. Write 1 to clear; writing 0 has no effect. EXCEP_ASMI_EN (bit 3) must be set to enable this flag.
18	SSMI_ASMI_ FLAG	**SSMI ASMI Flag.** If high, records that an ASMI was generated due to the SSMI bit being set in the received GLIU read or write response packet. Write 1 to clear; writing 0 has no effect. SSMI_ASMI_EN (bit 2) must be set to enable this flag.
17	TAR_ASMI_ FLAG	**Target Abort Received ASMI Flag.** If high, records that an ASMI was generated due to the reception of a target abort on the PCI bus. Write 1 to clear; writing 0 has no effect. TAR_ASMI_EN (bit 1) must be high to generate ASMI and set flag.
16	MAR_ASMI_ FLAG	**Master Abort Received ASMI Flag.** If high, records that an ASMI was generated due to the reception of a master abort on the PCI bus. Write 1 to clear; writing 0 has no effect. MAR_ASMI_EN (bit 0) be high to generate ASMI and set flag.
15:7	RSVD (RO)	**Reserved (Read Only).** Returns 0.
6	TAS_ASMI_EN	**Target Abort Signaled ASMI Enable.** Write 1 to enable TAS_ASMI_FLAG (bit 22) and to allow the event to generate an ASMI.
5	PAR_ASMI_EN	**Parity Error ASMI Enable.** Write 1 to enable PAR_ASMI_FLAG (bit 21) and to allow the event to generate an ASMI.
4	SYSE_ASMI_ EN	**System Error SMI Enable.** Write 1 to enable SYSE_ASMI_FLAG (bit 20) and to allow the event to generate an ASMI.

Downloaded from Arrow.com.

GLPCI_GLD_MSR_SMI Bit Descriptions (Continued)

Bit	Name	Description
3	EXCEP_ASMI_EN	**Exception Bit Enable.** Write 1 to enable EXCEP_ASMI_FLAG (bit 19) and to allow the event.
2	SSMI_EN	**SSMI Enable.** Write 1 to enable SSMI_ASMI_FLAG bit (bit 18) and to allow the event.
1	TAR_ASMI_EN	**Target Abort Received ASMI Enable.** Write 1 to enable TAR_ASMI_FLAG (bit 17) and to allow the event to generate an ASMI.
0	MAR_ASMI_EN	**Master Abort Received ASMI Enable.** Write 1 to enable MAR_ASMI_FLAG (bit 16) and to allow the event to generate an ASMI.

6.2.1.4 GLD Error MSR (GLPCI_GLD_MSR_ERROR)

MSR Address 51000003h
Type R/W
Reset Value 00000000_00000000h

The flags are set by internal conditions. The internal conditions are enabled if the EN bit is 1. Reading the FLAG bit returns the value; writing 1 clears the flag; writing 0 has no effect. (See Section 4.7.4 "MSR Address 3: Error Control" on page 78 for further details.)

GLPCI_GLD_MSR_ERROR Register Map

63	62	61	60	59	58	57	56	55	54	53	52	51	50	49	48	47	46	45	44	43	42	41	40	39	38	37	36	35	34	33	32
RSVD																															
31	30	29	28	27	26	25	24	23	22	21	20	19	18	17	16	15	14	13	12	11	10	9	8	7	6	5	4	3	2	1	0
RSVD									TAS_ERR_FLAG	PARE_ERR_FLAG	SYSE_ERR_FLAG	EXCEP_ERR_FLAG	RSVD	TAR_ERR_FLAG	MAR_ERR_FLAG	RSVD										TAS_ERR_EN	PARE_ERR_EN	SYSE_ERR_EN	EXCEP_ERR_EN	RSVD	TAR_ERR_EN	MAR_ERR_EN

GLPCI_GLD_MSR_ERROR Bit Descriptions

Bit	Name	Description
63:23	RSVD (RO)	**Reserved (Read Only).** Returns 0.
22	TAS_ERR_FLAG	**Target Abort Signaled Error Flag.** If high, records that an ERR was generated due to signaling of a target abort on the PCI bus. Write 1 to clear; writing 0 has no effect. TAS_ERR_EN (bit 6) must be set to enable this event and set flag.
21	PARE_ERR_FLAG	**Parity Error Flag.** If high, records that an ERR was generated due to the detection of a PCI bus parity error. Write 1 to clear; writing 0 has no effect. PARE_ERR_EN (bit 5) must be set to enable this event and set flag.
20	SYSE_ERR_FLAG	**System Error Flag.** If high, records that an ERR was generated due to the detection of a PCI bus system error. Write 1 to clear; writing 0 has no effect. SYSE_ERR_EN (bit 4) must be set to enable this event and set flag.
19	EXCEP_ERR_FLAG	**Exception Bit Error Flag.** If high, records that the EXCP bit in the received GLIU read or write response packet is set. Write 1 to clear. EXCEP_ERR_EN (bit 3) must be set to enable this event and set flag.
18	RSVD (RO)	**Reserved (Read Only).** Returns 0.
17	TAR_ERR_FLAG	**Target Abort Received Error Flag.** If high, records that an ERR was generated due to the reception of a target abort on the PCI bus. Write 1 to clear; writing 0 has no effect. TAR_ERR_EN (bit 1) must be set to enable this event and set flag.

Downloaded from Arrow.com.

GLPCI_GLD_MSR_ERROR Bit Descriptions (Continued)

Bit	Name	Description
16	MAR_ERR_ FLAG	**Master Abort Received Error Flag.** If high, records that an ERR was generated due to the reception of a master abort on the PCI bus. Write 1 to clear; writing 0 has no effect. MAR_ERR_EN (bit 0) must be set to enable this event and set flag.
15:7	RSVD (RO)	**Reserved (Read Only).** Returns 0.
6	TAS_ERR_EN	**Target Abort Signaled Error Enable.** Write 1 to enable TAS_ERR_FLAG (bit 22) and to allow the event to generate an ERR.
5	PARE_ERR_EN	**Parity Error Enable.** Write 1 to enable PAR_ERR_FLAG (bit 21) and to allow the event to generate an ERR.
4	SYSE_ERR_EN	**System Error Enable.** Write 1 to enable SYSE_ERR_FLAG (bit 20) and to allow the event to generate an ERR.
3	EXCEP_ERR_ EN	**Exception Bit Error Enable.** Write 1 to enable EXCEP_ERR_FLAG (bit 19) and to allow the event to generate an ERR.
2	RSVD (RO)	**Reserved (Read Only).** Returns 0.
1	TAR_ERR_EN	**Target Abort Received Error Enable.** Write 1 to enable TAR_ERR_FLAG (bit 17) and to allow the event to generate an ERR.
0	MAR_ERR_EN	**Master Abort Received Enable.** Write 1 to enable MAR_ERR_FLAG (bit 16) and to allow the event to generate an ERR.

6.2.1.5 GLD Power Management MSR (GLPCI_GLD_MSR_PM)

MSR Address 51000004h
Type R/W
Reset Value 00000000_00000000h

CLPCI_GLD_MSR_PM Register Map

63	62	61	60	59	58	57	56	55	54	53	52	51	50	49	48	47	46	45	44	43	42	41	40	39	38	37	36	35	34	33	32
RSVD														IO MODEA		RSVD															
31	30	29	28	27	26	25	24	23	22	21	20	19	18	17	16	15	14	13	12	11	10	9	8	7	6	5	4	3	2	1	0
RSVD																										P MODE2		P MODE1		P MODE0	

GLPCI_GLD_MSR_PM Bit Descriptions

Bit	Name	Description
63:50	RSVD (RO)	**Reserved (Read Only).** Returns 0.
49:48	IOMODEA	**I/O Mode A Control.** These bits determine how the associated PCI inputs and outputs will behave when the PMC asserts two internal signals that are controlled by PMS I/O Offset 20h and 0Ch. The list of affected signals is given in Table 4-11 "Sleep Driven PCI Signals" on page 79. 00: No gating of I/O cells during a Sleep sequence. (Default) 01: During a power management Sleep sequence, force inputs to their non-asserted state when PM_IN_SLPCTL is enabled. 10: During a power management Sleep sequence, force inputs to their non-asserted state when PM_IN_SLPCTL is enabled, and park (force) outputs low when PM_OUT_SLPCTL is enabled. 11: Immediately and unconditionally, force inputs to their not asserted state, and park (force) outputs low.

Downloaded from Arrow.com.

GLPCI_GLD_MSR_PM Bit Descriptions (Continued)

Bit	Name	Description
47:35	RSVD (RO)	**Reserved (Read Only).** Returns 0.
34:32	RSVD	**Reserved.** Write as read.
31:6	RSVD (RO)	**Reserved (Read Only).** Returns 0.
5:4	PMODE2	**Power Mode 2.** Power mode for PCI-fast clock domain. 00: Disable clock gating. Clocks are always on. 01: Enable active hardware clock gating. Clock goes off whenever this module's circuits are not busy. 10: Reserved. 11: Reserved.
3:2	PMODE1	**Power Mode 1.** Power mode for PCI clock domain. 00: Disable clock gating. Clocks are always on. 01: Enable active hardware clock gating. Clock goes off whenever this module's circuits are not busy. 10: Reserved. 11: Reserved.
1:0	PMODE0	**Power Mode 0.** Power mode for GLIU clock domain. 00: Disable clock gating. Clocks are always on. 01: Enable active hardware clock gating. Clock goes off whenever this module's circuits are not busy. 10: Reserved. 11: Reserved.

6.2.1.6 GLD Diagnostic MSR (GLPCI_GLD_MSR_DIAG)

MSR Address 51000005h
Type R/W
Reset Value 00000000_00000000h

This register is reserved for internal use by AMD and should not be written to.

Downloaded from Arrow.com.

6.2.2 GLPCI_SB Specific MSRs

6.2.2.1 Global Control (GLPCI_CTRL)

MSR Address 51000010h
Type R/W
Reset Value 44000030_00000003h

GLPCI_CTRL Register Map

63	62	61	60	59	58	57	56	55	54	53	52	51	50	49	48	47	46	45	44	43	42	41	40	39	38	37	36	35	34	33	32
FTH				RTH				RSVD				RTL			RSVD						SLTO	ILTO		LAT					0	0	0
31	30	29	28	27	26	25	24	23	22	21	20	19	18	17	16	15	14	13	12	11	10	9	8	7	6	5	4	3	2	1	0
SECSIZE								SUS			RSVD	FPIDE		PPIDE	LRH	RDHP	RSIDE	RPIDE	LEGACT		SDOFF	HCD	IOED	RSVD			CISM		OD	IE	ME

GLPCI_CTRL Bit Descriptions

Bit	Name	IB/OB	Description
63:60	FTH	IB	**In-Bound Flush Threshold.** Controls the timing for requesting new read data while concurrently flushing previously prefetched stale read data. While flushing stale data, if the number of prefetched 64-bit WORDs reaches this level, then a new read request is made.
59:56	RTH	IB	**In-Bound Read Threshold.** Controls the timing for prefetching read data. If the number of prefetched 32-bit WORDs is decremented and reaches this threshold, a subsequent GLIU request is generated to fetch the next cache-line of read data.
55:52	RSVD (RO)	---	**Reserved (Read Only).** Returns 0.
51:49	RTL	OB	**Retry Transaction Limit.** Limits the number of out-bound retries. If a target signals retry indefinitely the PCI interface may be configured to abort the failing out-bound request. 000: No limit. 001: 8 retries. 010: 16 retries. 011: 32 retries. 100: 64 retries. 101: 128 retries. 110: 256 retries. 111: 512 retries.
48:43	RSVD (RO)	---	**Reserved (Read Only).** Returns 0.
42	SLTO	IB	**Subsequent Latency Time-Out Select.** Specifies the subsequent target latency time-out limit. If within a burst, the GLPCI_SB module does not respond with the configured number of clock edges, the PCI interface terminates the PCI bus cycle. 0: 8 PCI clock edges. 1: 4 PCI clock edges.
41:40	ILTO	IB	**Initial Latency Time-Out Select.** Specifies the initial target latency time-out limit for the PCI interface. If the GLPCI_SB module does not respond with the first data phase within the configured number of clock edges, the PCI interface terminates the PCI bus cycle. 00: 32 PCI clock edges. 01: 16 PCI clock edges. 10: 8 PCI clock edges. 11: 4 PCI clock edges.
39:35	LAT	IB/OB	**PCI Usage Timer.** Usage time-out value for limiting bus tenure.
34:32	0 (RO)	IB/OB	**Constant 0 (Read Only).** The three least significant bits of the PCI latency timer field are fixed as zeros. These bits are not used as part of the PCI latency timer comparison.

Downloaded from Arrow.com.

GLPCI_CTRL Bit Descriptions (Continued)

Bit	Name	IB/OB	Description
31:24	SECSIZE	---	**Sectorsize.** The Primary IDE prefetch is stopped one DWORD before the end of the sector to prevent interrupt assertion because of prefetch. After starting read from the next sector, prefetch is automatically continued. The value represents the sector size divided by 16. Programming examples: Value Sector Size 128: 8 KB 64: 4 KB 32: 2 KB 16: 1 KB 8: 512 Byte 4: 256 Byte 2: 128 Byte 1: 64 Byte 0: No Prefetch
23:21	SUS	IB/OB	**Busy Sustain.** Controls the sustain time for keeping the clocks running after the internal busy signals indicate that the clocks may be gated. 000: No sustain. 001: 4 clock cycles. 010: 8 clock cycles. 011: 16 clock cycles. 100: 32 clock cycles. 101: 64 clock cycles. 110: 128 clock cycles. 111: 256 clock cycles.
20	RSVD (RO)	---	**Reserved (Read Only).** Returns 0.
19:18	FPIDE	IB	**Prefetch Primary IDE.** If these bits are set, I/O reads to address 1F0h conform to a prefetching behavior. Under this mode, the GLPCI_SB issues GLIU Read Request Packets for this specific address before receiving a request on the PCI bus for it. 00: Off. (Default) 01: At “beginning” initialize pipeline with two read requests. 10: At “beginning” initialize pipeline with three read requests. 11: Reserved. The prefetch only applies if the current command is “read”. The current command is assumed from the last write to the IDE Command Register at 1F7h. The following commands are considered “reads”: Read sectors - 20h Read multiple - C4h Read buffer - E4h All reads from the same sector must be of the same size (16 or 32 bits) - software must not mix 16-bit and 32-bit reads. Prefetch does not cross sector boundaries that are programmed in the SECSIZE field (bit [31:24]). Prefetch is stopped before the boundary and automatically restarted after the boundary is crossed. Any prefetched data is discarded on any write to 1F7h.
17	PPIDE	IB	**Post Primary IDE.** Defaults to 0. If this bit is set, I/O writes to address 1F0h are posted; that is, the “send response” flag is not set in the GLIU Write Request Packet. Effectively, an I/O write to this specific address is posted just like memory writes are posted. When IDE posting is enabled, single and DWORD writes may be mixed without restriction.
16	LRH	IB	**Legacy I/O Retry/Hold.** 0: Legacy I/O retry. 1: Legacy I/O hold. Regardless of the above settings, an I/O read or write to 1F0h always causes a retry if data can not be immediately transferred.

Downloaded from Arrow.com.

GLPCI_CTRL Bit Descriptions (Continued)

Bit	Name	IB/OB	Description
15	RDHP	IB	**Reject DMA High Page.** Controls the decoding of I/O range associated with the DMA High Page registers (480h-48Fh). 0: Considered part of legacy I/O. 1: Subtractive decode.
14	RSIDE	IB	**Reject Secondary IDE.** Controls the decoding of I/O range associated with Secondary IDE address of 170h-177h and 376h. 0: Considered part of legacy I/O. 1: Subtractive decode.
13	RPIDE	IB	**Reject Primary IDE.** Controls the decoding of I/O range associated with Primary IDE address of 1F0h-1F7h and 3F6h. 0: Considered part of legacy I/O. 1: Subtractive decode.
12:11	LEGACT	IB	**Legacy I/O Space Active Decode.** 00: Subtractive decode (claim on fourth clock). 01: Slow decode (claim on third clock). 10: Medium decode (Claim on second clock). 11: Reserved (implemented as medium decode and returned 10 when read).
10	SDOFF	OB	**Non Legacy Subtractive Decode Off.** 0: Subtractive decode enabled. 1: Subtractive decode disabled.
9	HCD	IB	**Hold for CIS Transfer Disable.** 0: Hold for CIS transfer enabled. 1: Hold for CIS transfer disabled.
8	IOED	IB	**I/O Addressing Error Checking Disable.** 0: I/O addressing error checking enabled. 1: I/O addressing error checking disabled.
7:5	RSVD (RO)	---	**Reserved (Read Only).** Returns 0.
4:3	CISM	IB/OB	**CIS Mode.** 00: Mode A. Not used in normal operation. (Default) 01: Mode B. Not used in normal operation. 10: Mode C. Used in normal operation. 11: Reserved. See Section 5.2.14 "CPU Interface Serial (CIS)" on page 86 for details regarding operation modes.
2	OD	OB	**Out-Bound Request Disable.** 0: Out-bound request enabled. 1: Out-bound request disabled. When an out-bound request is disabled, all outstanding out-bound requests are serviced before a read response packet with SSMI bit and all data bits cleared and EXCEP bit set is returned.
1	IE	IB	**I/O Enable.** Enable handling of in-bound I/O transactions from PCI. When set to 1 the PCI interface accepts all in-bound I/O transactions from PCI. This mode is only intended for design verification purposes. When cleared to 0 no in-bound I/O transactions are accepted.
0	ME	IB	**Memory Enable.** Enable handling of in-bound memory access transaction from PCI. When cleared to 0, the PCI interface does not accept any in-bound memory transactions from the PCI bus.

Downloaded from Arrow.com.

6.2.2.2 Region 0-15 Configuration MSRs (GLPCI_R[x])

Region 0 Configuration (GLPCI_R0)
MSR Address 51000020h
Type R/W
Reset Value 00000000_00000000h

Region 1 Configuration (GLPCI_R1)
MSR Address 51000021h
Type R/W
Reset Value 00000000_00000000h

Region 2 Configuration (GLPCI_R2)
MSR Address 51000022h
Type R/W
Reset Value 00000000_00000000h

Region 3 Configuration (GLPCI_R3)
MSR Address 51000023h
Type R/W
Reset Value 00000000_00000000h

Region 4 Configuration (GLPCI_R4)
MSR Address 51000024h
Type R/W
Reset Value 00000000_00000000h

Region 5 Configuration (GLPCI_R5)
MSR Address 51000025h
Type R/W
Reset Value 00000000_00000000h

Region 6 Configuration (GLPCI_R6)
MSR Address 51000026h
Type R/W
Reset Value 00000000_00000000h

Region 7 Configuration (GLPCI_R7)
MSR Address 51000027h
Type R/W
Reset Value 00000000_00000000h

Region 8 Configuration (GLPCI_R8)
MSR Address 51000028h
Type R/W
Reset Value 00000000_00000000h

Region 9 Configuration (GLPCI_R9)
MSR Address 51000029h
Type R/W
Reset Value 00000000_00000000h

Region 10 Configuration (GLPCI_R10)
MSR Address 5100002Ah
Type R/W
Reset Value 00000000_00000000h

Region 11 Configuration (GLPCI_R11)
MSR Address 5100002Bh
Type R/W
Reset Value 00000000_00000000h

Region 12 Configuration (GLPCI_R12)
MSR Address 5100002Ch
Type R/W
Reset Value 00000000_00000000h

Region 13 Configuration (GLPCI_R13)
MSR Address 5100002Dh
Type R/W
Reset Value 00000000_00000000h

Region 14 Configuration (GLPCI_R14)
MSR Address 5100002Eh
Type R/W
Reset Value 00000000_00000000h

Region 15 Configuration (GLPCI_R15)
MSR Address 5100002Fh
Type R/W
Reset Value 00000000_00000000h

GLPCI_R[x] Register Map

63	62	61	60	59	58	57	56	55	54	53	52	51	50	49	48	47	46	45	44	43	42	41	40	39	38	37	36	35	34	33	32
TOP																				RSVD											SPACE
31	30	29	28	27	26	25	24	23	22	21	20	19	18	17	16	15	14	13	12	11	10	9	8	7	6	5	4	3	2	1	0
BASE																				RSVD								PF	RSVD	RH	EN

Downloaded from Arrow.com.

GLPCI_REGCONF[x] Bit Descriptions

Bit	Name	Description
63:44	TOP	**Top of Region.** For memory use [63:44] as top of address bits [31:12]. For I/O use [63:46] as top of address bits [19:2]. (Note 1)
43:33	RSVD (RO)	**Reserved (Read Only):** Returns 0.
32	SPACE	**Region Space Indicator.** 0: Memory space. 1: I/O space.
31:12	BASE	**Base of Region.** For memory use [31:12] as base of address bits [31:12]. For I/O use [31:14] as base of address bits [19:2]. (Note 1)
11:4	RSVD (RO)	**Reserved (Read Only).** Returns 0.
3	PF	**Prefetchable.** If region is memory and this bit is set, it indicates a prefetechable memory region. Reads to this region have no side-effects. If region is I/O and this bit is set, post all I/O writes to this region.
2	RSVD (RO)	**Reserved (Read Only).** Returns 0.
1	RH	**Retry/Hold.** Defines whether GLPCI_SB PCI slave generates a retry condition or holds the PCI bus until cycle completion. Note that even if hold is selected, the cycle is terminated if initial latency time-out is reached. 0: Retry. 1: Hold.
0	EN	**Region Enable.** Set to 1 to enable access to this region.

Note 1. For memory, 4 KB granularity, inclusive: [63:44] <= address[31:12] <= [31:12].
For I/O, 4B granularity, inclusive: [63:46] <= address[19:2] <= [31:14].

6.2.2.3 PCI Configuration Space Header Byte 0-3 (GLPCI_PCIHEAD_BYTE0-3)

MSR Address 51000030h
Type RO
Reset Value 00000000_208F1022h

Reads back the value of PCI Configuration Space Header Byte 0-3 (GLPCI_PCI_HEAD_BYTE0-3). See Section 6.2.3.1 on page 234 for register map and bit definitions.

6.2.2.4 PCI Configuration Space Header Byte 4-7 (GLPCI_PCIHEAD_BYTE4-7)

MSR Address 51000031h
Type RO
Reset Value 00000000_00000000h

Reads back the value of PCI Configuration Space Header Byte 4-7 (GLPCI_PCI_HEAD_BYTE4-7). See Section 6.2.3.2 on page 235 for register map and bit definitions.

6.2.2.5 PCI Configuration Space Header Byte 8-B (GLPCI_PCIHEAD_BYTE8-B)

MSR Address 51000032h
Type RO
Reset Value 00000000_FF0000xxh

Reads back the value of PCI Configuration Space Header Byte 8-B (GLPCI_PCI_HEAD_BYTE8-B). See Section 6.2.3.3 on page 235 for register map and bit definitions.

Downloaded from Arrow.com.

6.2.2.6 PCI Configuration Space Header Byte C-F (GLPCI_PCIHEAD_BYTEC-F)

MSR Address 51000033h
Type RO
Reset Value 00000000_00000000h

Reads back the value of PCI Configuration Space Header Byte C-F (GLPCI_PCI_HEAD_BYTEC-F). See Section 6.2.3.4 on page 236 for register map and bit definitions.

6.2.3 PCI Configuration Registers

The first 16 bytes of the PCI configuration register space consist of standard PCI header registers. An additional 32 bytes are used to implement a mailbox for giving access from the PCI bus to the internal MSRs of the CS5536 companion device.

MSR Access Mailbox

Upon reset, MSR access is enabled. That is, the PMCTRL.EN bit is set. A PCI configuration (config) write to register F0h clearing the EN bit is required to disable MSR access.

An MSR read is accomplished by:

- A PCI configuration write to register F4h (PMADDR) with the appropriate address value. If the appropriate address value was previously written to register F4h, then this step is unnecessary.
- A PCI configuration read of register F8h (PMDATA0). This starts the GLIU MSR read. The PCI bus is held (i.e., no retry unless time-out) until the transaction completes.
- A PCI configuration read of register FCh (PMDATA1). The PCI bus is held (i.e., no retry unless time-out) until the transaction completes.

An MSR write is accomplished by:

- A PCI configuration write to register F4h (PMADDR) with the appropriate address value. If the appropriate address value was previously written to register F4h, then this step is unnecessary.
- A PCI configuration write to register F8h (PMDATA0).
- A PCI configuration write to register FCh (PMDATA1). This starts the GLIU MSR write. The PCI bus is held (i.e., no retry unless time-out) until the transaction completes.

Any PCI transaction interrupting an MSR read/write transaction is retried until the MSR transaction is complete.

The external MSR write request always has the SEND_RESPONSE bit set. The returned MSR read or write response packet is checked for the SSMI and EXCEP bits.

6.2.3.1 PCI Configuration Space Header Byte 0-3 (GLPCI_PCI_HEAD_BYTE0-3)

PCI Index 00h
Type RO
Reset Value 208F1022h

GLPCI_PCI_HEAD_BYTE0-3 Register Map

31	30	29	28	27	26	25	24	23	22	21	20	19	18	17	16	15	14	13	12	11	10	9	8	7	6	5	4	3	2	1	0
DEV_ID																VEN_ID															

GLPCI_PCI_HEAD_BYTE0-3 Bit Descriptions

Bit	Name	Description
31:16	DEV_ID (RO)	**Device Identification Register (Read Only).** Identifies AMD Geode™ CS5536 companion device as the device. Reads as 208Fh.
15:0	VEN_ID (RO)	**Vendor Identification Register (Read Only).** Identifies AMD as the vendor. Reads as 1022h.

Downloaded from Arrow.com.

6.2.3.2 PCI Configuration Space Header Byte 4-7 (GLPCI_PCI_HEAD_BYTE4-7)

PCI Index 04h
Type RO
Reset Value 00000000h

GLPCI_PCI_HEAD_BYTE4-7 Register Map

31	30	29	28	27	26	25	24	23	22	21	20	19	18	17	16	15	14	13	12	11	10	9	8	7	6	5	4	3	2	1	0
PCI_STS																PCI_CMD															

GLPCI_PCI_HEAD_BYTE4-7 Bit Descriptions

Bit	Name	Description
31:16	PCI_STS (RO)	**PCI Status Register (Read Only).** Not implemented.
15:0	PCI_CMD (RO)	**PCI Command Register (Read Only).** Not implemented.

6.2.3.3 PCI Configuration Space Header Byte 8-B (GLPCI_PCI_HEAD_BYTE8-B)

PCI Index 08h
Type RO
Reset Value FF0000xxh

GLPCI_PCI_HEAD_BYTE8-B Register Map

31	30	29	28	27	26	25	24	23	22	21	20	19	18	17	16	15	14	13	12	11	10	9	8	7	6	5	4	3	2	1	0
PCI_CLASS																								DEV_REV_ID							

GLPCI_PCI_HEAD_BYTE8-B Bit Descriptions

Bit	Name	Description
31:16	PCI_CLASS (RO)	**PCI Class Code (Read Only).**
15:0	DEV_REV_ID (RO)	**Device Revision ID (Read Only).** Identifies the major and minor silicon revision of the CS5536 companion device. Can also be read at MSR 51700017h[7:0]. See Section 6.20.2.12 "Chip Revision ID (GLCP_CHIP_REV_ID)" on page 574.

Downloaded from Arrow.com.

6.2.3.4 PCI Configuration Space Header Byte C-F (GLPCI_PCI_HEAD_BYTEC-F)

PCI Index 0Ch
Type RO
Reset Value 00000000h

GLPCI_PCI_HEAD_BYTC-F Register Map

31	30	29	28	27	26	25	24	23	22	21	20	19	18	17	16	15	14	13	12	11	10	9	8	7	6	5	4	3	2	1	0
PCI_BIST								PCI_HEADER								PCI_LTNCY_TMR								PCI_CACHE							

GLPCI_PCI_HEAD_BYTEC-F Bit Descriptions

Bit	Name	Description
31:24	PCI_BIST (RO)	**PCI BIST Register (Read Only).** Not implemented.
23:16	PCI_HEADER (RO)	**PCI Header Type Byte (Read Only).** This register defines the format of this header. This header is of type format 0, that is, this byte contains all zeroes.
16:8	PCI_LTNCY_TMR (RO)	**PCI Latency Timer Register (Read Only).** Not implemented. Writing these bits has no effect.
7:0	PCI_CACHE (RO)	**PCI Cache Line Size Register (Read Only).** Not implemented. Writing these bits has no effect.

6.2.3.5 PCI MSR Control (GLPCI_PMCTRL)

PCI Index F0h
Type R/W
Reset Value 00000001h

GLPCI_PMCTRL Register Map

31	30	29	28	27	26	25	24	23	22	21	20	19	18	17	16	15	14	13	12	11	10	9	8	7	6	5	4	3	2	1	0
RSVD																															MSR_EN

GLPCI_PMCTRL Bit Descriptions

Bit	Name	Description
31:1	RSVD (RO)	**Reserved (Read Only).** Returns 0.
0	MSR_EN	**MSR Enable.** Set to 1 to enable access to Model Specific Registers (MSRs).

Downloaded from Arrow.com.

6.2.3.6 PCI MSR Address (GLPCI_PMADDR)

PCI Index F4h
Type R/W
Reset Value 00000000h

GLPCI_PMADDR Register Map

31	30	29	28	27	26	25	24	23	22	21	20	19	18	17	16	15	14	13	12	11	10	9	8	7	6	5	4	3	2	1	0
ADDRESS																															

GLPCI_PMADDR Bit Descriptions

Bit	Name	Description
31:0	ADDRESS	**MSR Address.** Address field to use in GLIU MSR accessing. Addresses with the most significant 18 bits set to zero address the model specific registers of the GLPCI_SB module itself. If any of the 18 most significant bits are set to one, the GLPCI_SB forwards the MSR access to the GLIU without performing any address translation.

6.2.3.7 PCI MSR Data 0 (GLPCI_PMDATA0)

PCI Index F8h
Type R/W
Reset Value 00000000h

GLPCI_PMDATA0 Register Map

31	30	29	28	27	26	25	24	23	22	21	20	19	18	17	16	15	14	13	12	11	10	9	8	7	6	5	4	3	2	1	0
DATA0																															

GLPCI_PMDATA0 Bit Descriptions

Bit	Name	Description
31:0	DATA0	**MSR Data 0.** Least significant 32-bits of MSR data. DATA0 and DATA1 (PCI Index FCh[31:0]) are atomic in nature (i.e., if DATA0 access is made in GLPCI_SB then it must followed by DATA1 access). Until the DATA1 access, the GLPCI_SB retries all other transactions on the PCI bus for 2^{15} cycles. After the timeout expires, atomic nature of DATA0 and DATA1 expires and other transactions are accepted.

Downloaded from Arrow.com.

6.2.3.8 PCI MSR Data 1 (GLPCI_PMDATA1)

PCI Index FCh
Type R/W
Reset Value 00000000h

GLPCI_PMDATA1 Register Map

31	30	29	28	27	26	25	24	23	22	21	20	19	18	17	16	15	14	13	12	11	10	9	8	7	6	5	4	3	2	1	0
DATA1																															

GLPCI_PMDATA1 Bit Descriptions

Bit	Name	Description
31:0	DATA1	**MSR Data 1.** Most significant 32-bits of MSR data. DATA0 and DATA1 R/W are atomic in nature (i.e., if DATA0 access is made in GLPCI_SB then it must followed by DATA1 access). Until the DATA1 access, GLPCI_SB retries all other transactions on PCI bus for 2^{15} cycles. After this timeout, atomic nature for DATA0 and DATA1 expires and other transactions are accepted.

Downloaded from Arrow.com.

6.3 AC97 Audio Codec Controller Register Descriptions

The control registers for the AC97 Audio Codec Controller (ACC) are divided into two register sets:

- Standard GeodeLink™ Device (GLD) MSRs
- ACC Native Registers

The MSRs are accessed via the RDMSR and WRMSR processor instructions. The MSR address is derived from the perspective of the CPU Core. See Section 4.2 "MSR Addressing" on page 60 for more details on MSR addressing.

The ACC Native registers begin at ACC Offset 00h. The system automatically maps the ACC registers to a location in memory space or I/O space, but this is hidden from the module's point of view. At the audio block level, it does not matter if these registers are in memory or I/O space but at the system level, there are significant operational differences (see Section "Eliminating Race Conditions"). Hereafter, the ACC Addresses are called out as I/O Offsets, since I/O mapping is recommended.

For Native register access, only the lower seven bits of the address are decoded, so the register space is aliased. Accesses beyond 7Fh alias below 7Fh. Accesses to addresses that are not implemented or reserved are "don't cares" (i.e., writes do nothing, reads return 0s).

Tables 6-8 and 6-9 are ACC register summary tables that include reset values and page references where the bit descriptions are provided.

Eliminating Race Conditions

All I/O writes are sequence locked, that is, completion of the write at the target is confirmed before the executing processor proceeds to the next instruction. All memory writes are posted, that is, the executing processor proceeds to the next instruction immediately after the write whether or not the write has completed. Write posting can lead to out of order execution. Reading the register to which a write has been posted forces any pending posted write to execute if it has not already done so.

Consider this example. Assume an audio master is performing an access to system memory and register access is temporarily blocked. If the processor was servicing an interrupt, a write to clear the interrupt posts to a memory mapped register but not execute immediately, that is, the interrupt would not immediately clear. If the processor then enabled the Programmable Interrupt Controller (PIC) for new interrupts, then the "not immediately cleared" interrupt causes a false new interrupt, a form of a race condition.

This type of race condition can be eliminated by placing the audio registers in I/O space, or, by performing a register read to any register having a pending posted write that is capable of creating a race condition.

Table 6-8. Standard GeodeLink™ Device MSRs Summary

MSR Address	Type	Register Name	Reset Value	Reference
51500000h	RO	GLD Capabilities MSR (ACC_GLD_MSR_CAP)	00000000_005335xxh	Page 242
51500001h	R/W	GLD Master Configuration MSR (ACC_GLD_MSR_CONFIG)	00000000_0000F000h	Page 242
51500002h	R/W	GLD SMI MSR (ACC_GLD_MSR_SMI)	00000000_00000000h	Page 243
51500003h	R/W	GLD Error MSR (ACC_GLD_MSR_ERROR)	00000000_00000000h	Page 244
51500004h	R/W	GLD Power Management MSR (ACC_GLD_MSR_PM)	00000000_00000000h	Page 245
51500005h	R/W	GLD Diagnostic MSR (ACC_GLD_MSR_DIAG)	00000000_00000000h	Page 245

Downloaded from Arrow.com.

Table 6-9. ACC Native Registers Summary

ACC I/O Offset	Type	Name	Reset Value	Reference
00h	R/W	Codec GPIO Status Register (ACC_GPIO_STATUS)	00000000h	Page 246
04h	R/W	Codec GPIO Control Register (ACC_GPIO_CNTL)	00000000h	Page 247
08h	R/W	Codec Status Register (ACC_CODEC_STATUS)	00000000h	Page 247
0Ch	R/W	Codec Control Register (ACC_CODEC_CNTL)	00000000h	Page 249
10h-11h	---	Not Used	---	---
12h	RO	Second Level Audio IRQ Status Register (ACC_IRQ_STATUS)	00000000h	Page 251
14h	R/W	Bus Master Engine Control Register (ACC_ENGINE_CNTL)	00000000h	Page 252
18h-1Fh	---	Not Used	---	---
20h	R/W	Bus Master 0 Command (ACC_BM0_CMD)	00h	Page 253
21h	RC	Bus Master 0 IRQ Status (ACC_BM0_STATUS)	00h	Page 254
22h-23h	---	Not Used	---	---
24h	R/W	Bus Master 0 PRD Table Address (ACC_BM0_PRD)	00000000h	Page 255
28h	R/W	Bus Master 1 Command (ACC_BM1_CMD)	08h	Page 253
29h	RC	Bus Master 1 IRQ Status (ACC_BM1_STATUS)	00h	Page 254
2Ah-2Bh	---	Not Used	---	---
2Ch	R/W	Bus Master 1 PRD Table Address (ACC_BM1_PRD)	00000000h	Page 255
30h	R/W	Bus Master 2 Command (ACC_BM2_CMD)	00h	Page 253
31h	RC	Bus Master 2 IRQ Status (ACC_BM2_STATUS)	00h	Page 254
32h-33h	---	Not Used	---	---
34h	R/W	Bus Master 2 PRD Table Address (ACC_BM2_PRD)	00000000h	Page 255
38h	R/W	Bus Master 3 Command (ACC_BM3_CMD)	08h	Page 253
39h	RC	Bus Master 3 IRQ Status (ACC_BM3_STATUS)	00h	Page 254
3Ah-3Bh	---	Not Used	---	---
3Ch	R/W	Bus Master 3 PRD Table Address (ACC_BM3_PRD)	00000000h	Page 255
40h	R/W	Bus Master 4 Command (ACC_BM4_CMD)	00h	Page 253
41h	RC	Bus Master 4 IRQ Status (ACC_BM4_STATUS)	00h	Page 254
42h-43h	---	Not Used	---	---
44h	R/W	Bus Master 4 PRD Table Address (ACC_BM4_PRD)	00000000h	Page 255

Downloaded from Arrow.com.

Table 6-9. ACC Native Registers Summary

ACC I/O Offset	Type	Name	Reset Value	Reference
48h	R/W	Bus Master 5 Command (ACC_BM5_CMD)	08h	Page 253
49h	RC	Bus Master 5 IRQ Status (ACC_BM5_STATUS)	00h	Page 254
4Ah-4Bh	---	Not Used	---	---
4Ch	R/W	Bus Master 5 PRD Table Address (ACC_BM5_PRD)	00000000h	Page 255
50h	R/W	Bus Master 6 Command (ACC_BM6_CMD)	00h	Page 253
51h	RC	Bus Master 6 IRQ Status (ACC_BM6_STATUS)	00h	Page 254
52h-53h	---	Not Used	---	---
54h	R/W	Bus Master 6 PRD Table Address (ACC_BM6_PRD)	00000000h	Page 255
58h	R/W	Bus Master 7 Command (ACC_BM7_CMD)	00h	Page 253
59h	RC	Bus Master 7 IRQ Status (ACC_BM7_STATUS)	00h	Page 254
5Ah-5Bh	---	Not Used	---	---
5Ch	R/W	Bus Master 7 PRD Table Address (ACC_BM7_PRD)	00000000h	Page 255
60h	RO	Bus Master 0 DMA Pointer (ACC_BM0_PNTR)	00000000h	Page 256
64h	RO	Bus Master 1 DMA Pointer (ACC_BM1_PNTR)	00000000h	Page 256
68h	RO	Bus Master 2 DMA Pointer (ACC_BM2_PNTR)	00000000h	Page 256
6Ch	RO	Bus Master 3 DMA Pointer (ACC_BM3_PNTR)	00000000h	Page 256
70h	RO	Bus Master 4 DMA Pointer (ACC_BM4_PNTR)	00000000h	Page 256
74h	RO	Bus Master 5 DMA Pointer (ACC_BM5_PNTR)	00000000h	Page 256
78h	RO	Bus Master 6 DMA Pointer (ACC_BM6_PNTR)	00000000h	Page 256
7Ch	RO	Bus Master 7 DMA Pointer (ACC_BM7_PNTR)	00000000h	Page 256

Downloaded from Arrow.com.

6.3.1 Standard GeodeLink Device (GLD) MSRs

6.3.1.1 GLD Capabilities MSR (ACC_GLD_MSR_CAP)

MSR Address 51500000h
Type RO
Reset Value 00000000_005335xxh

ACC_GLD_MSR_CAP Register Map

63	62	61	60	59	58	57	56	55	54	53	52	51	50	49	48	47	46	45	44	43	42	41	40	39	38	37	36	35	34	33	32
RSVD																															
31	30	29	28	27	26	25	24	23	22	21	20	19	18	17	16	15	14	13	12	11	10	9	8	7	6	5	4	3	2	1	0
RSVD								DEV_ID																REV_ID							

ACC_GLD_MSR_CAP Bit Descriptions

Bit	Name	Description
63:24	RSVD	**Reserved.** Reads return 0.
23:8	DEV_ID	**Device ID.** Identifies module.
7:0	REV_ID	**Revision ID.** Identifies module revision. See *AMD Geode™ CS5536 Companion Device Specification Update* document for value.

6.3.1.2 GLD Master Configuration MSR (ACC_GLD_MSR_CONFIG)

MSR Address 51500001h
Type R/W
Reset Value 00000000_0000F000h

ACC_GLD_MSR_CONFIG Register Map

63	62	61	60	59	58	57	56	55	54	53	52	51	50	49	48	47	46	45	44	43	42	41	40	39	38	37	36	35	34	33	32
RSVD																															
31	30	29	28	27	26	25	24	23	22	21	20	19	18	17	16	15	14	13	12	11	10	9	8	7	6	5	4	3	2	1	0
RSVD												PREFETCH_SEL	FIX_PREFETCH			DISCARD		NON_COH_WR	NON_COH_RD	RSVD					PRI			RSVD	PID		

ACC_GLD_MSR_CONFIG Bit Descriptions

Bit	Name	Description
63:20	RSVD	**Reserved.** Reads return 0.
19	PREFETCH_SEL	**Select Flexible Prefetch Policy.** 0: Fixed read prefetch policy is selected. (Default) 1: The ACC establishes prefetch policy.
18:16	FIX_PREFETCH	**Fixed Read Prefetch Policy.** 000: None. Each read takes a complete trip to memory. 001: Initial read 08 bytes. Read next 8 only when requested. 010: Initial read 16 bytes. Read next 16 only when requested. 011: Initial read 32 bytes. Read next 32 only when requested. 100: Initial read 32 bytes. Read next 32 when 16 bytes left. 101, 110, and 111: Reserved.

Downloaded from Arrow.com.

ACC_GLD_MSR_CONFIG Bit Descriptions (Continued)

Bit	Name	Description
15:14	DISCARD	**Read Prefetch Discard Policy.** 00: Reserved. 01: Discard all data not taken under current local bus grant. 10: Discard all data on any local bus transaction. 11: Discard all data on any local bus write transaction. Always use this value.
13	NON_COH_WR	**Non-Coherent Write.** 0: Write requests are coherent. 1: Write requests are non-coherent. Always use this value.
12	NON_COH_RD	**Non-Coherent Read.** 0: Read requests are coherent. 1: Read requests are non-coherent. Always use this value.
11:7	RSVD	**Reserved.** Reads as 0.
6:4	PRI	**Priority Level.** Always write 0.
3	RSVD (RO)	**Reserved (Read Only).** Returns 0.
2:0	PID	**Priority ID.** Always write 0.

6.3.1.3 GLD SMI MSR (ACC_GLD_MSR_SMI)

MSR Address 51500002h
Type R/W
Reset Value 00000000_00000000h

The flags are set by internal conditions. The internal conditions are enabled if the EN bit is 1. Reading the FLAG bit returns the value; writing 1 clears the flag; writing 0 has no effect. (See Section 4.7.3 "MSR Address 2: SMI Control" on page 74 for further SMI/ASMI generation details.)

ACC_GLD_MSR_SMI Register Map

63	62	61	60	59	58	57	56	55	54	53	52	51	50	49	48	47	46	45	44	43	42	41	40	39	38	37	36	35	34	33	32
RSVD																															IRQ_SSMI_FLAG
31	30	29	28	27	26	25	24	23	22	21	20	19	18	17	16	15	14	13	12	11	10	9	8	7	6	5	4	3	2	1	0
RSVD																															IRQ_SSMI_EN

Downloaded from Arrow.com.

ACC_GLD_MSR_SMI Bit Descriptions

Bit	Name	Description
63:33	RSVD	**Reserved.** Reads return 0.
32	IRQ_SSMI_FLAG	**IRQ SSMI Flag.** If high, records that an SSMI was generated because the ACC interrupt signal transitioned from 0 to 1. This bit is unaffected when the interrupt transitions from 1 to 0. Write 1 to clear; writing 0 has no effect. IRQ_SSMI_EN (bit 1) must be set to enable this event and set flag.
31:1	RSVD	**Reserved.** Reads return 0.
0	IRQ_SSMI_EN	**IRQ SSMI Enable.** Write 1 to enable IRQ_SSMI_FLAG (bit 32) and to allow the event to generate an SSMI.

6.3.1.4 GLD Error MSR (ACC_GLD_MSR_ERROR)

MSR Address 51500003h
Type R/W
Reset Value 00000000_00000000h

The flags are set by internal conditions. The internal conditions are enabled if the EN bit is 1. Reading the FLAG bit returns the value; writing 1 clears the flag; writing 0 has no effect. (See Section 4.7.3 "MSR Address 2: SMI Control" on page 74 for further details.)

ACC_GLD_MSR_ERROR Register Map

63	62	61	60	59	58	57	56	55	54	53	52	51	50	49	48	47	46	45	44	43	42	41	40	39	38	37	36	35	34	33	32
RSVD																															UNEXP_TYPE_ERR_FLAG
31	30	29	28	27	26	25	24	23	22	21	20	19	18	17	16	15	14	13	12	11	10	9	8	7	6	5	4	3	2	1	0
RSVD																															UNEXP_TYPE_ERR_EN

Downloaded from Arrow.com.

ACC_GLD_MSR_ERROR Bit Descriptions

Bit	Name	Description
63:33	RSVD	**Reserved.** Reads return 0.
32	UNEXP_TYPE_ ERR_FLAG	**Unexpected Type Error Flag.** If high, records that an ERR was generated due to either an unexpected type event or a master response packet with the EXCEP bit set has been received. Write 1 to clear; writing 0 has no effect. UNEXP_TYPE_ERR_EN (bit 1) must be set to enable this event and set flag.
31:1	RSVD	**Reserved.** Reads return 0.
0	UNEXP_TYPE_ ERR_EN	**Unexpected Type Error Enable.** Write 1 to enable UNEXP_TYPE_ERR_FLAG (bit 32) and to allow the event to generate an ERR.

6.3.1.5 GLD Power Management MSR (ACC_GLD_MSR_PM)

MSR Address 51500004h
Type R/W
Reset Value 00000000_00000000h

ACC_GLD_MSR_PM Register Map

63	62	61	60	59	58	57	56	55	54	53	52	51	50	49	48	47	46	45	44	43	42	41	40	39	38	37	36	35	34	33	32
RSVD																															
31	30	29	28	27	26	25	24	23	22	21	20	19	18	17	16	15	14	13	12	11	10	9	8	7	6	5	4	3	2	1	0
RSVD																												PMODE1		PMODE0	

ACC_GLD_MSR_PM Bit Descriptions

Bit	Name	Description
63:62	RSVD	**Reserved.** Reads return value written.
61:4	RSVD	**Reserved.** Reads return 0.
3:2	PMODE1	**Power Mode 1.** Power mode for LBus clock. 00: Disable clock gating. Clocks are always on. 01: Enable active hardware clock gating. Clock goes off whenever the LBus circuits are not busy. 10: Reserved. 11: Reserved.
1:0	PMODE0	**Power Mode 0.** Power mode for GLIU clock 00: Disable clock gating. Clocks are always on. 01: Enable active hardware clock gating. Clock goes off whenever the GLIU circuits are not busy. 10: Reserved. 11: Reserved.

6.3.1.6 GLD Diagnostic MSR (ACC_GLD_MSR_DIAG)

MSR Address 51500005h
Type R/W
Reset Value 00000000_00000000h

This register is reserved for internal use by AMD and should not be written to.

Downloaded from Arrow.com.

6.3.2 ACC Native Registers

6.3.2.1 Codec GPIO Status Register (ACC_GPIO_STATUS)

ACC I/O Offset 00h
Type R/W
Reset Value 00000000h

ACC_GPIO_STATUS Register Map

31	30	29	28	27	26	25	24	23	22	21	20	19	18	17	16	15	14	13	12	11	10	9	8	7	6	5	4	3	2	1	0
GPIO_EN	INT_EN	WU_INT_EN	RSVD							INT_FLAG	WU_INT_FLAG	PIN_STS																			

ACC_GPIO_STATUS Bit Descriptions

Bit	Name	Description
31	GPIO_EN	**GPIO Enable.** This bit determines if the codec GPIO pin data is sent out in slot 12 of the serial output stream. 0: Send 0s and tag slot 12 as invalid. 1: Send GPIO pin data and tag slot valid.
30	INT_EN	**Codec GPIO Interrupt Enable.** Allow a codec GPIO interrupt to set the codec GPIO interrupt flag and generate an IRQ. 0: Disable. 1: Enable. A GPIO interrupt is defined by serial data in slot 12, bit 0
29	WU_INT_EN	**Codec GPIO Wakeup Interrupt Enable.** Allow a codec GPIO wakeup interrupt to set the codec GPIO wakeup interrupt flag and generate an IRQ. 0: Disable. 1: Enable. A codec GPIO wakeup interrupt is defined as a 0-to-1 transition of AC_S_IN or AC_S_IN2 while the codec is powered down. This bit can only be set after the codec(s) are powered down (See Audio Driver Power-up/down Programming Model on page 97).
28:22	RSVD	**Reserved.** Reads return 0.
21	INT_FLAG	**Codec GPIO Interrupt Flag (Read to Clear).** If the GPIO interrupt is enabled (bit 30 = 1) then this flag is set upon a codec GPIO interrupt event (serial data in slot 12, bit 0 = 1), and an IRQ is generated.
20	WU_INT_FLAG	**Codec GPIO Wakeup Interrupt Flag (Read to Clear).** If the GPIO wakeup interrupt is enabled (bit 29 = 1), then this flag is set when a GPIO wakeup interrupt occurs, and an IRQ is generated.
19:0	PIN_STS (RO)	**Codec GPIO Pin Status (Read Only).** This is the GPIO pin status that is received from the codec in slot 12 of the serial input stream. This is updated every time slot 12 of the input stream is tagged valid. **Note:** All 20 bits of input slot 12 are visible in this register, including reserved bits within slot 12.

Downloaded from Arrow.com.

6.3.2.2 Codec GPIO Control Register (ACC_GPIO_CNTL)

ACC I/O Offset 04h
Type R/W
Reset Value 00000000h

ACC_GPIO_CNTL Register Map

31	30	29	28	27	26	25	24	23	22	21	20	19	18	17	16	15	14	13	12	11	10	9	8	7	6	5	4	3	2	1	0
RSVD												PIN_DATA																			

ACC_GPIO_CNTL Bit Descriptions

Bit	Name	Description
31:20	RSVD	**Reserved.** Reads return 0.
19:0	PIN_DATA	**Codec GPIO Pin Data.** This is the GPIO pin data that is sent to the codec in slot 12 of the serial output stream. **Note:** All 20 bits of the output slot 12 are controllable through this register, even though some are reserved per the AC97 spec and should be set to zero.

6.3.2.3 Codec Status Register (ACC_CODEC_STATUS)

ACC I/O Offset 08h
Type R/W
Reset Value 00000000h

ACC_CODEC_STATUS Register Map

31	30	29	28	27	26	25	24	23	22	21	20	19	18	17	16	15	14	13	12	11	10	9	8	7	6	5	4	3	2	1	0
STS_ADD								PRM_RDY_STS	SEC_RDY_STS	SDATAIN2_EN	BM5_SEL	BM4_SEL	RSVD	STS_NEW	RSVD	STS_DATA																	

ACC_CODEC_STATUS Bit Descriptions

Bit	Name	Description
31:24	STS_ADD (RO)	**Codec Status Address (Read Only).** Address of the register for which status is being returned. This address comes from slot 1 bits [19:12] of the serial input stream. **Note:** Bit 19 of slot 1 is reserved, but still observable by software.
23	PRM_RDY_STS (RO)	**Primary Codec Ready (Read Only).** Indicates the ready status of the primary codec (slot 0, bit 15). Software should not access the codec or enable any bus masters until this bit is set. This bit is cleared when the AC Link Shutdown bit is set in the Codec Control register (ACC I/O Offset 0Ch[18]).
22	SEC_RDY_STS (RO)	**Secondary Codec Ready (Read Only).** Indicates the ready status of the secondary codec (slot 0, bit 15). Software should not access the codec or enable any bus masters until this bit is set. This bit is cleared when the AC Link Shutdown bit is set in the Codec Control register (ACC I/O Offset 0Ch[18]).

Downloaded from Arrow.com.

ACC_CODEC_STATUS Bit Descriptions (Continued)

Bit	Name	Description
21	SDATAIN2_EN	**Enable Second Serial Data Input (AC_S_IN2).** 0: Disable. 1: Enable. For the second serial input to function, this bit must be set. This is functionally ANDed with the AC_S_IN2 port of the ACC. Often, it may be necessary to configure a corresponding I/O pin as an input on the chip containing the ACC.
20	BM5_SEL	**Audio Bus Master 5 AC97 Slot Select.** Selects the serial input slot for Audio Bus Master 5 to receive data. 0: Slot 6. 1: Slot 11.
19	BM4_SEL	**Audio Bus Master 4 AC97 Slot Select.** Selects slot for Audio Bus Master 4 to transmit data. 0: Slot 6. 1: Slot 11.
18	RSVD	**Reserved.** Reads return 0
17	STS_NEW	**Codec Status New (Read to Clear).** Indicates if the status data in bits [15:0] is new: 0: Not new. 1: New. This bit is set by hardware after receiving valid codec status data in slot 2 of the input stream. Upon issuing a read to the codec registers, software should wait for this flag to indicate that the corresponding data has been returned.
16	RSVD	**Reserved**. Reads return 0.
15:0	STS_DATA (RO)	**Codec Status Data (Read Only).** This is the codec status data that is received from the codec in slot 2, bits [19:4] of the serial input stream. This is used for reading the contents of registers inside the AC97 codec.

Downloaded from Arrow.com.

6.3.2.4 Codec Control Register (ACC_CODEC_CNTL)

ACC I/O Offset 0Ch
Type R/W
Reset Value 00000000h

Since this register could potentially be accessed by both an audio driver and a modem driver running at the same time, it is expected that all writes occur as atomic read-modify-write accesses.

ACC_CODEC_CNTL Register Map

31	30	29	28	27	26	25	24	23	22	21	20	19	18	17	16	15	14	13	12	11	10	9	8	7	6	5	4	3	2	1	0
RW_CMD	CMD_ADD							COMM_SEL		PD_PRIM	PD_SEC	RSVD	LNK_SHTDWN	LNK_WRM_RST	CMD_NEW	CMD_DATA															

ACC_CODEC_CNTL Bit Descriptions

Bit	Name	Description
31	RW_CMD	**Codec Read/Write Command.** This bit specifies a read or write operation targeting the AC97 codec's registers. 0: Write. 1: Read. This bit determines whether slot 1, bit 19 of the serial output stream will be high or low.
30:24	CMD_ADD	**Codec Command Address.** Address of the codec control register for which the command is being sent. This address goes in slot 1, bits [18:12] of the serial output stream. This is used for specifying the address of a register in the AC97 codec (for reading or writing).
23:22	COMM_SEL	**Audio Codec Communication.** Selects which codec to communicate with (for register reads/writes): 00: Codec 1 (Primary) 01: Codec 2 (Secondary) 10: Codec 3 11: Codec 4 These bits determine output slot 0, bits [1:0]. When these bits are non-zero, bits [14:13] of output slot 0 must be set to zeros regardless of the validity of slot 1 and slot 2.
21	PD_PRIM	**Power-down Semaphore for Primary Codec.** This bit is used by software in conjunction with bit 20 to coordinate the power-down of the two codecs. This bit is intended to be set by the audio driver to indicate to the modem driver that the audio codec has been prepared for power-down. Internally it does not control anything, and is simply a memory bit.
20	PD_SEC	**Power-down Semaphore for Secondary Codec.** This bit is used by software in conjunction with bit 21 to coordinate the power-down of the two codecs. This bit is intended to be set by the modem driver to indicate to the audio driver that the modem codec has been prepared for power-down. Internally it does not control anything, and is simply a memory bit.
19	RSVD	**Reserved.** Reads return 0.

Downloaded from Arrow.com.

ACC_CODEC_CNTL Bit Descriptions (Continued)

Bit	Name	Description
18	LNK_SHTDWN	**AC Link Shutdown.** Informs the Controller that the AC Link is being shutdown. This bit should be set at the same time that the codec power-down command is issued to the codec. Setting this bit also clears both Codec Ready bits in the Codec Status register (ACC I/O Offset 08h[23:22]). Issuing a warm reset via bit 17 clears this bit. If the codec has been powered off and back on, a warm reset is unnecessary, this bit should be cleared manually.
17	LNK_WRM_RST	**AC Link Warm Reset.** Setting this bit initiates the AC Link/codec warm reset process. It is automatically cleared by hardware once the serial bit clock resumes. This should only be set when the codec(s) are powered down. Once set, software should then wait for "Codec Ready" before accessing the codec.
16	CMD_NEW	**Codec Command New.** Indicates if the codec command in bits [31:22] (and [15:0] for writes) is new. 0: Not new. 1: New. This bit is to be set by software when a new command is loaded. It is cleared by hardware when the command is sent to the codec. Software must wait for this bit to clear before loading another command. This bit can not be cleared by software. When the CODEC_CNTL register is written by software with bit 16 cleared, then bits [31:22] and [15:0] are unaffected. Thus, bit 16 is an "enable" allowing bits [31:22] and [15:0] to be changed.
15:0	CMD_DATA	**Codec Command Data.** This is the command data being sent to the codec in slot 2, bits [19:12] of the serial output stream. This is used for writing data into one of the registers in the AC97 codec. The contents are only sent to the codec for write commands (bit [31] = 0). For reads slot 2, bits[19:12] are stuffed with 0s.

Downloaded from Arrow.com.

6.3.2.5 Second Level Audio IRQ Status Register (ACC_IRQ_STATUS)

ACC I/O Offset 12h
Type RO
Reset Value 00000000h

ACC_IRQ_STATUS Register Map

15	14	13	12	11	10	9	8	7	6	5	4	3	2	1	0
RSVD						BM7_IRQ_STS	BM6_IRQ_STS	BM5_IRQ_STS	BM4_IRQ_STS	BM3_IRQ_STS	BM2_IRQ_STS	BM1_IRQ_STS	BM0_IRQ_STS	WU_IRQ_STS	IRQ_STS

ACC_IRQ_STATUS Bit Descriptions

Bit	Name	Description
15:10	RSVD	**Reserved.** Reads return 0.
9	BM7_IRQ_STS	**Audio Bus Master 7 IRQ Status.** If this bit is set, it indicates that an IRQ was caused by an event occurring on Audio Bus Master 7. Reading the Bus Master 7 IRQ Status Register clears this bit.
8	BM6_IRQ_STS	**Audio Bus Master 6 IRQ Status.** If this bit is set, it indicates that an IRQ was caused by an event occurring on Audio Bus Master 6. Reading the Bus Master 6 IRQ Status Register clears this bit.
7	BM5_IRQ_STS	**Audio Bus Master 5 IRQ Status.** If this bit is set, it indicates that an IRQ was caused by an event occurring on Audio Bus Master 5. Reading the Bus Master 5 IRQ Status Register clears this bit.
6	BM4_IRQ_STS	**Audio Bus Master 4 IRQ Status.** If this bit is set, it indicates that an IRQ was caused by an event occurring on Audio Bus Master 4. Reading the Bus Master 4 IRQ Status Register clears this bit.
5	BM3_IRQ_STS	**Audio Bus Master 3 IRQ Status.** If this bit is set, it indicates that an IRQ was caused by an event occurring on Audio Bus Master 3. Reading the Bus Master 3 IRQ Status Register clears this bit.
4	BM2_IRQ_STS	**Audio Bus Master 2 IRQ Status.** If this bit is set, it indicates that an IRQ was caused by an event occurring on Audio Bus Master 2. Reading the Bus Master 2 IRQ Status Register clears this bit.
3	BM1_IRQ_STS	**Audio Bus Master 1 IRQ Status.** If this bit is set, it indicates that an IRQ was caused by an event occurring on Audio Bus Master 1. Reading the Bus Master 1 IRQ Status Register clears this bit.
2	BM0_IRQ_STS	**Audio Bus Master 0 IRQ Status.** If this bit is set, it indicates that an IRQ was caused by an event occurring on Audio Bus Master 0. Reading the Bus Master 0 IRQ Status Register clears this bit.
1	WU_IRQ_STS	**Codec GPIO Wakeup IRQ Status.** If this bit is set, it indicates that an IRQ was caused by a GPIO Wakeup Interrupt event (serial data in going high during power-down). Reading the Codec GPIO Status Register clears this bit.
0	IRQ_STS	**Codec GPIO IRQ Status.** If this bit is set, it indicates that an IRQ was caused by a GPIO event in the AC97 Codec (slot 12, bit 0). Reading the Codec GPIO Status Register clears this bit.

Downloaded from Arrow.com.

6.3.2.6 Bus Master Engine Control Register (ACC_ENGINE_CNTL)

ACC I/O Offset 14h
Type R/W
Reset Value 00000000h

ACC_ENGINE_CNTL Register Map

31	30	29	28	27	26	25	24	23	22	21	20	19	18	17	16	15	14	13	12	11	10	9	8	7	6	5	4	3	2	1	0
RSVD																															SSND_MODE

ACC_ENGINE_CNTL Bit Descriptions

Bit	Name	Description
31:1	RSVD	**Reserved.** Reads return 0.
0	SSND_MODE	**Surround Sound (5.1) Synchronization Mode.** Enables synchronization of Bus Masters 0, 4, 6, and 7. This bit should be set whenever playing back multi-channel surround sound. It ensures that the four bus masters stay synchronized and do not introduce any temporal skew between the separate channels.

Downloaded from Arrow.com.

6.3.2.7 Audio Bus Master 0-7 Command Registers (ACC_BM[x]_CMD)

Bus Master 0 Command (ACC_BM0_CMD)
ACC I/O Offset 20h
Type R/W
Reset Value 00h

Bus Master 1 Command (ACC_BM1_CMD)
ACC I/O Offset 28h
Type R/W
Reset Value 08h

Bus Master 2 Command (ACC_BM2_CMD)
ACC I/O Offset 30h
Type R/W
Reset Value 00h

Bus Master 3 Command (ACC_BM3_CMD)
ACC I/O Offset 38h
Type R/W
Reset Value 08h

Bus Master 4 Command (ACC_BM4_CMD)
ACC I/O Offset 40h
Type R/W
Reset Value 00h

Bus Master 5 Command (ACC_BM5_CMD)
ACC I/O Offset 48h
Type R/W
Reset Value 08h

Bus Master 6 Command (ACC_BM6_CMD)
ACC I/O Offset 50h
Type R/W
Reset Value 00h

Bus Master 7 Command (ACC_BM7_CMD)
ACC I/O Offset 58h
Type R/W
Reset Value 00h

ACC_BM[x]_CMD Register Map

7	6	5	4	3	2	1	0
RSVD				RW	BYTE_ORD	BM_CTL	

ACC_BM[x]_CMD Bit Descriptions

Bit	Name	Description
7:4	RSVD	**Reserved.** Reads return 0
3	RW (RO)	**Read or Write (Read Only).** Indicates the transfer direction of the audio bus master. This bit always reads 0 for BM [0,2,4,6,7]. This bit always reads 1 for BM[1,3,5]. 0: Memory to codec. 1: Codec to memory.
2	BYTE_ORD	**Byte-Order.** Sets the byte order for 16-bit samples that this bus master uses. 0: Little Endian (Intel) byte-order (LSBs at lower address). 1: Big Endian (Motorola) byte-order (MSBs at lower address).
1:0	BM_CTL	**Bus Master Pause/Enable Control.** Enables, disables, or pauses the bus master. 00: Disable bus master. 01: Enable bus master. 10: Reserved. 11: Pause bus master (if currently enabled) or do nothing (if currently disabled). When the bus master is enabled by writing 01, the bus master starts up by using the address in its associated PRD Table Address Register. Writing 00 while the bus master is enabled causes the bus master to stop immediately. Upon resuming, the bus master uses the address in its PRD Table Address Register. The PRD Table Address Register must be re-initialized by software before enabling the bus master, or there is a risk that the bus master may overstep the bounds of the PRD Table. **Note:** When the bus master reaches a PRD with the EOT bit set, these bits are set to 00.

Downloaded from Arrow.com.

6.3.2.8 Audio Bus Master 0-7 IRQ Status Registers (ACC_BM[x]_STATUS)

Bus Master 0 IRQ Status (ACC_BM0_STATUS)
ACC I/O Offset 21h
Type RC
Reset Value 00h

Bus Master 1 IRQ Status (ACC_BM1_STATUS)
ACC I/O Offset 29h
Type RC
Reset Value 00h

Bus Master 2 IRQ Status (ACC_BM2_STATUS)
ACC I/O Offset 31h
Type RC
Reset Value 00h

Bus Master 3 IRQ Status (ACC_BM3_STATUS)
ACC I/O Offset 39h
Type RC
Reset Value 00h

Bus Master 4 IRQ Status (ACC_BM4_STATUS)
ACC I/O Offset 41h
Type RC
Reset Value 00h

Bus Master 5 IRQ Status (ACC_BM5_STATUS)
ACC I/O Offset 49h
Type RC
Reset Value 00h

Bus Master 6 IRQ Status (ACC_BM6_STATUS)
ACC I/O Offset 51h
Type RC
Reset Value 00h

Bus Master 7 IRQ Status (ACC_BM7_STATUS)
ACC I/O Offset 59h
Type RC
Reset Value 00h

ACC_BM[x]_STATUS Register Map

7	6	5	4	3	2	1	0
RSVD						BM_EOP_ERR	EOP

ACC_BM[x]_STATUS Bit Descriptions

Bit	Name	Description
7:2	RSVD	**Reserved.** Reads return 0
1	BM_EOP_ERR	**Bus Master Error.** If this bit is set, it indicates that hardware encountered a second EOP before software cleared the first EOP. If hardware encounters a second EOP (end of page) before software clears the first EOP, it causes the bus master to pause until this register is read to clear the error. Read to clear.
0	EOP	**End of Page.** If this bit is set, it indicates the bus master transferred data that is marked by the EOP bit in the PRD table (bit 30). Read to clear.

Downloaded from Arrow.com.

6.3.2.9 Audio Bus Master 7-0 PRD Table Address Registers (ACC_BM[x]_PRD)

Bus Master 0 PRD Table Address (ACC_BM0_PRD)
ACC I/O Offset 24h
Type R/W
Reset Value 00000000h

Bus Master 1 PRD Table Address (ACC_BM1_PRD)
ACC I/O Offset 2Ch
Type R/W
Reset Value 00000000h

Bus Master 2 PRD Table Address (ACC_BM2_PRD)
ACC I/O Offset 34h
Type R/W
Reset Value 00000000h

Bus Master 3 PRD Table Address (ACC_BM3_PRD)
ACC I/O Offset 3Ch
Type R/W
Reset Value 00000000h

Bus Master 4 PRD Table Address (ACC_BM4_PRD)
ACC I/O Offset 44h
Type R/W
Reset Value 00000000h

Bus Master 5 PRD Table Address (ACC_BM5_PRD)
ACC I/O Offset 4Ch
Type R/W
Reset Value 00000000h

Bus Master 6 PRD Table Address (ACC_BM6_PRD)
ACC I/O Offset 54h
Type R/W
Reset Value 00000000h

Bus Master 7 PRD Table Address (ACC_BM7_PRD)
ACC I/O Offset 5Ch
Type R/W
Reset Value 00000000h

ACC_BM[x]_PRD Register Map

31	30	29	28	27	26	25	24	23	22	21	20	19	18	17	16	15	14	13	12	11	10	9	8	7	6	5	4	3	2	1	0
PRD_PNTR																														RSVD	

ACC_BM[x]_PRD Bit Descriptions

Bit	Name	Description
31:2	PRD_PNTR	**Pointer to the Physical Region Descriptor Table.** This register is a PRD table pointer for Audio Bus Master [x]. When written, this register points to the first entry in a PRD table. Once Audio Bus Master [x] is enabled (Command Register bit 0 = 1), it loads the pointer and updates this register to the next PRD by adding 08h. When read, this register points to the next PRD.
1:0	RSVD	**Reserved.** Reads return 0.

Downloaded from Arrow.com.

6.3.2.10 Bus Master 0-7 DMA Pointer Registers (ACC_BM[x]_PNTR)

Bus Master 0 DMA Pointer (ACC_BM0_PNTR)
ACC I/O Offset 60h
Type RO
Reset Value 00000000h

Bus Master 1 DMA Pointer (ACC_BM1_PNTR)
ACC I/O Offset 64h
Type RO
Reset Value 00000000h

Bus Master 2 DMA Pointer (ACC_BM2_PNTR)
ACC I/O Offset 68h
Type RO
Reset Value 00000000h

Bus Master 3 DMA Pointer (ACC_BM3_PNTR)
ACC I/O Offset 6Ch
Type RO
Reset Value 00000000h

Bus Master 4 DMA Pointer (ACC_BM4_PNTR)
ACC I/O Offset 70h
Type RO
Reset Value 00000000h

Bus Master 5 DMA Pointer (ACC_BM5_PNTR)
ACC I/O Offset 74h
Type RO
Reset Value 00000000h

Bus Master 6 DMA Pointer (ACC_BM6_PNTR)
ACC I/O Offset 78h
Type RO
Reset Value 00000000h

Bus Master 7 DMA Pointer (ACC_BM7_PNTR)
ACC I/O Offset 7Ch
Type RO
Reset Value 00000000h

ACC_BM[x]_PNTR Register Map

31	30	29	28	27	26	25	24	23	22	21	20	19	18	17	16	15	14	13	12	11	10	9	8	7	6	5	4	3	2	1	0
DMA_PNTR																															

ACC_BM[x]_PNTR Bit Descriptions

Bit	Name	Description
31:0	DMA_PNTR	**DMA Buffer Pointer.** Address of current sample being fetched (BM [0,2,4,6,7]) or written (BM [1,3,5]) by the DMA Bus Master [x].

Downloaded from Arrow.com.

6.4 USB Controller Register Descriptions

The control registers allow software to communicate with the USB Controller. These control registers are broadly divided into six register sets:

- Standard GeodeLink™ Device (GLD) MSRs
- This register is reserved for internal use by AMD and should not be written to. USB Specific MSRs
- USB Open Host Controller Interface Native Registers
- USB Enhanced Host Controller Native Registers
- This register is for AMD internal debug purposes. Software should never write this register. USB Device Controller Native Registers
- USB Option Controller Native Registers

The MSRs (both Standard and Specific) are accessed via the RDMSR and WRMSR processor instructions. The MSR address is derived from the perspective of the CPU Core. See Section 4.2 "MSR Addressing" on page 60 for more details on MSR addressing. The USB Transceiver PLL can be disabled by software for power management purposes with the GLCP_CLKOFF register (MSR 51700010h[46:0]).

Tables 6-10 through 6-12 are register summary tables that include reset values and page references where the register maps and bit descriptions are provided.

Table 6-10. Standard GeodeLink™ Device MSRs Summary

MSR Address	Type	Register Name	Reset Value	Reference
51200000h	RO	GLD Capabilities MSR (USB_GLD_MSR_CAP)	00000000_005435xxh	Page 262
51200001h	R/W	GLD Master Configuration MSR (USB_GLD_MSR_CONFIG)	00000000_000BF000h	Page 262
51200002h	R/W	GLD SMI MSR (USB_GLD_MSR_SMI)	00000000_0000002Fh	Page 263
51200003h	R/W	GLD Error MSR (USB_GLD_MSR_ERROR)	00000000_00000000h	Page 265
51200005h	R/W	GLD Diagnostic MSR (USB_GLD_MSR_DIAG)	00000000_00000000h	Page 265

Table 6-11. USB Specific MSRs Summary

MSR Address	Type	Register Name	Reset Value	Reference
51200008h	R/W	USB OHC Base Address (USBMSROHCB)	00000000_00000000h	Page 266
51200009h	R/W	USB EHC Base Address (USBMSREHCB)	00000000_00000000h	Page 266
5120000Ah	R/W	USB Device Controller Base Address (USBMSRUDCB)	00000000_00000000h	Page 268
5120000Bh	R/W	USB Option Controller Base Address (USBMSRUOCB)	00000000_00000000h	Page 268

Downloaded from Arrow.com.

Table 6-12. USB Open Host Controller Interface Native Registers Summary

OHC Memory Offset	Type	Register Name	Reset Value	Reference
00h	RO	Host Controller Interface Revision (USB_HcRevision)	00000110h	Page 269
04h	R/W	Host Controller Control (USB_HcControl)	00001414h	Page 270
08h	R/W	Host Controller Command Status (USB_HcCommandStatus)	00000000h	Page 271
0Ch	R/W	Host Controller Interrupt Status (USB_HcInterruptStatus)	00000000h	Page 273
10h	R/W	Host Controller Interrupt Enable (USB_HcInterruptEnable)	00000000h	Page 274
14h	R/W	Host Controller Interrupt Disable (USB_HcInterruptDisable)	00000000h	Page 275
18h	R/W	Host Controller HCCA (USB_HcHCCA)	00000000h	Page 276
1Ch	RO	Host Controller Current Period List ED (USB_HcPeriodCurrentED)	00000000h	Page 276
20h	R/W	Host Controller Control List Head ED (USB_HcControlHeadED)	00000000h	Page 276
24h	R/W	Host Controller Current Control List ED (USB_HcControlCurrentED)	00000000h	Page 277
28h	R/W	Host Controller Bulk List Head ED (USB_HcBulkHeadED)	00000000h	Page 277
2Ch	R/W	Host Controller Current Bulk List ED (USB_HcBulkCurrentED)	00000000h	Page 278
30h	RO	Host Controller Current Done List Head ED (USB_HcDoneHead)	00000000h	Page 278
34h	R/W	Host Controller Frame Interval (USB_HcFmInterval)	00002EDFh	Page 279
38h	RW	Host Controller Frame Remaining (USB_HcFrameRemaining)	00000000h	Page 279
3Ch	R/W	Host Controller Frame Number (USB_HcFmNumber)	00000000h	Page 280
40h	R/W	Host Controller Periodic Start (USB_HcPeriodicStart)	00000000h	Page 280
44h	R/W	Host Controller Low Speed Threshold (USB_HcLSThreshold)	00000628h	Page 281
48h	R/W	Host Controller Root Hub Descriptor A (USB_HcRhDescriptorA)	10000904h	Page 281
4Ch	R/W	Host Controller Root Hub Descriptor B (USB_HcRhDescriptorB)	00000000h	Page 282
50h	R/W	Host Controller Root Hub Status (USB_HcRhStatus)	00000000h	Page 283
54h	R/W	Host Controller Root Hub Port Status 1 (USB_HcRhPortStatus[1])	00000000h	Page 284
58h	R/W	Host Controller Root Hub Port Status 2 (USB_HcRhPortStatus[2])	00000000h	Page 289
5Ch	R/W	Host Controller Root Hub Port Status 3 (USB_HcRhPortStatus[3])	00000000h	Page 289
60h	R/W	Host Controller Root Hub Port Status 4 (USB_HcRhPortStatus[4])	00000000h	Page 292

Downloaded from Arrow.com.

Table 6-13. USB Enhanced Host Controller Interface Native Registers Summary

EHC Memory Offset	Type	Register Name	Reset Value	Reference
00h	RO	Host Controller Capability Register (USB_HCCAPBASE)	01000010h	Page 295
04h	RO	Structural Parameters Register (USB_HCSPARAMS)	00001414h	Page 295
08h	RO	Capability Parameters Register (USB_HCCPARAMS)	00000012h	Page 296
10h	R/W	Command Register (USBCMD)	00008000h	Page 297
14h	R/W	Status Register (USBSTS)	00001000h	Page 298
18h	R/W	Interrupt Enable Register (USBINTR)	00000000h	Page 299
1Ch	R/W	Frame Index Register (FRINDEX)	00000000h	Page 300
20h	RO	Control Data Structure Segment Register (CTRLDSSEGMEN)	00000000h	Page 301
24h	R/W	Periodic Frame List Base Address Register (PERIODICLISTBASE)	00000000h	Page 301
28h	R/W	Current Asynchronous List Address Register (ASYNCLISTADDR)	00000000h	Page 302
50h	R/W	Configure Flag Register (CONFIGFLAG)	00000000h	Page 302
54h	R/W	Port 1 Status and Control Register (PORTSC_1)	00000000h	Page 302
58h	R/W	Port 2 Status and Control Register (PORTSC_2)	00000000h	Page 305
5Ch	R/W	Port 3 Status and Control Register (PORTSC_3)	00000000h	Page 307
60h	R/W	Port 4 Status and Control Register (PORTSC_4)	00000000h	Page 309
90h	R/W	Vendor Specific Register 0 (IPREG00)	00000000h	Page 312
94h	R/W	Vendor Specific Register 1 (IPREG01)	00F80010h	Page 312
98h	R/W	Vendor Specific Register 2 (IPREG02)Vendor Specific Register 2 (IPREG02)	00000020h	Page 312
9Ch	R/W	Vendor Specific Register 3 (IPREG03)	00000001h	Page 312
A0h	R/W	Vendor Specific Register 4 (IPREG04)	00000000h	Page 312
A4h	R/W	Vendor Specific Register 5 (IPREG05)	00000000h	Page 312

Table 6-14. USB Device Controller Native Registers Summary

UDC Memory Offset	Type	Register Name	Reset Value	Reference
EPINCTRL_0: 0000h EPINCTRL_1: 0020h EPINCTRL_2: 0040h EPINCTRL_3: 0060h EPINCTRL_4: 0080h	R/W	Endpoint In Control Register (EPINCTRL)	00000000h	Page 313
EPINSTS_0: 0004h EPINSTS_1: 0024h EPINSTS_2: 0044h EPINSTS_3: 0064h EPINSTS_4: 0084h	R/WC	Endpoint In Status Register (EPINSTS)	00000000h	Page 314

Downloaded from Arrow.com.

Table 6-14. USB Device Controller Native Registers Summary

UDC Memory Offset	Type	Register Name	Reset Value	Reference
EPINBS_0: 0008h EPINBS_1: 0028h EPINBS_2: 0048h EPINBS_3: 0068h EPINBS_4: 0088h	R/W	Endpoint In Buffer Size Register (EPINBS)	00000000h	Page 315
EPINMAXP_0: 000Ch EPINMAXP_1: 002Ch EPINMAXP_2: 004Ch EPINMAXP_3: 006Ch EPINMAXP_4: 008Ch	R/W	Endpoint In Max Packet Size Register (EPIN-MAXP)	00000000h	Page 315
EPINDDP_0: 0014h EPINDDP_1: 0034h EPINDDP_2: 0054h EPINDDP_3: 0074h EPINDDP_4: 0094h	R/W	Endpoint In Data Descriptor Register (EPINDDP)	00000000h	Page 316
EPINWRC_0: 001Ch EPINWRC_1: 003Ch EPINWRC_2: 005Ch EPINWRC_3: 007Ch EPINWRC_4: 009Ch	W	Endpoint In Write Confirmation Register (EPIN-WRC)	00000000h	Page 316
EPOUTCTRL_0: 0200h EPOUTCTRL_1: 0220h EPOUTCTRL_2: 0240h EPOUTCTRL_3: 0260h EPOUTCTRL_4: 0280h	R/W	Endpoint Out Control Register (EPOUTCTRL)	00000000h	Page 317
EPOUTSTS_0: 0204h EPOUTSTS_1: 0224h EPOUTSTS_2: 0244h EPOUTSTS_3: 0264h EPOUTSTS_4: 0284h	R/W	Endpoint Out Status Register (EPOUTSTS)	00000000h	Page 318
EPOUTFRN_0: 0208h EPOUTFRN_1: 0228h EPOUTFRN_2: 0248h EPOUTFRN_3: 0268h EPOUTFRN_4: 0288h	RO	Endpoint Out Frame Number Register (EPOUT-FRN)	00000000h	Page 319
EPOUTMAXP_0: 020Ch EPOUTMAXP_1: 022Ch EPOUTMAXP_2: 024Ch EPOUTMAXP_3: 026Ch EPOUTMAXP_4: 028Ch	R/W	Endpoint Out Max Packet Size Register (EPOUT-MAXP)	00000000h	Page 319
EPOUTSUBP_0: 0210h EPOUTSUBP_1: 0230h EPOUTSUBP_2: 0250h EPOUTSUBP_3: 0270h EPOUTSUBP_4: 0290h	R/W	Endpoint Out Setup Register (EPOUTSUBP)	00000000h	Page 320
EPOUTDDP_0: 0214h EPOUTDDP_1: 0234h EPOUTDDP_2: 0254h EPOUTDDP_3: 0274h EPOUTDDP_4: 0294h	R/W	Endpoint Out Data Descriptor Register (EPOUT-DDP)	00000000h	Page 320

Downloaded from Arrow.com.

Table 6-14. USB Device Controller Native Registers Summary

UDC Memory Offset	Type	Register Name	Reset Value	Reference
EPOUTRDC_0: 021Ch EPOUTRDC_1: 023Ch EPOUTRDC_2: 025Ch EPOUTRDC_3: 027Ch EPOUTRDC_4: 029Ch	WC	Endpoint Out Read Confirmation Register (EPOUTRDC)	00000000h	Page 321
0400h	R/W	Device Configuration Register (DEVCFG)	00000020h	Page 321
0404h	R/W	Device Control Register (DEVCTRL)	00000000h	Page 323
0408h	RO	Device Status Register (DEVSTS)	000x0000h	Page 324
040Ch	R/WC	Device Interrupt Register (DEVINTR)	00000000h	Page 325
0410h	R/W	Device Interrupt Mask Register (DEVINTRMSK)	0000003Eh	Page 325
0414h	R/WC	Endpoint Interrupt Register (EPINTR)	00000000h	Page 326
0418h	R/W	Endpoint Interrupt Mask Register (EPINTRMSK)	001F001Fh	Page 326
EP0REG: 0504h EP1REG: 0508h EP2REG: 050Ch EP3REG: 0510h EP4REG: 0514h EP5REG: 0518h EP6REG: 051Ch EP7REG: 0520h EP8REG: 0524h	R/W	Endpoint Register (EPREG)	00000000h	Page 327
0800h-BFCh	R/W	Receive FIFO (RXFIFOMEM)	xxxxxxxxh	Page 328
0C00h-11FCh	R/W	Transmit FIFO (TXFIFOMEM)	xxxxxxxxh	Page 328

Table 6-15. USB Option Controller Native Registers Summary

UOC Memory Offset	Type	Register Name	Reset Value	Reference
00h	R/W	USB Option Capability Register (UOCCAP)	000003EAh	Page 328
04h	R/W	USB Option Multiplex Register (UOCMUX)	00000000h	Page 329
08h	RO	USB Reserved 0 (USB_RSVD0)	000008xxh	Page 330
0Ch	R/W	USB Option Control Register (UOCCTL)	00000200h	Page 330
10h	R/W	USB Reserved 1 (USB_RSVD1)	00000000h	Page 330
14h	R/WC	USB Reserved 2 (USB_RSVD2)	00000000h	Page 330
18h	R/W	USB Reserved 3 (USB_RSVD3)	00000000h	Page 330

Downloaded from Arrow.com.

6.4.1 Standard GeodeLink™ Device (GLD) MSRs

6.4.1.1 GLD Capabilities MSR (USB_GLD_MSR_CAP)

MSR Address 51200000h
Type RO
Reset Value 00000000_005435xxh

USB_GLD_MSR_CAP Register Map

63	62	61	60	59	58	57	56	55	54	53	52	51	50	49	48	47	46	45	44	43	42	41	40	39	38	37	36	35	34	33	32
RSVD																															
31	30	29	28	27	26	25	24	23	22	21	20	19	18	17	16	15	14	13	12	11	10	9	8	7	6	5	4	3	2	1	0
RSVD								DEV_ID																REV_ID							

USB_GLD_MSR_CAP Bit Descriptions

Bit	Name	Description
63:24	RSVD	**Reserved.** Reads as 0.
23:8	DEV_ID	**Device ID.** Identifies module.
7:0	REV_ID	**Revision ID.** Identifies module revision. See *AMD Geode™ CS5536 Companion Device Specification Update* document for value.

6.4.1.2 GLD Master Configuration MSR (USB_GLD_MSR_CONFIG)

MSR Address 51200001h
Type R/W
Reset Value 00000000_000BF000h

USB_GLD_MSR_CONFIG Register Map

63	62	61	60	59	58	57	56	55	54	53	52	51	50	49	48	47	46	45	44	43	42	41	40	39	38	37	36	35	34	33	32
RSVD																												SSDEN	ENPW	OHCPD	PFEN
31	30	29	28	27	26	25	24	23	22	21	20	19	18	17	16	15	14	13	12	11	10	9	8	7	6	5	4	3	2	1	0
RSVD																					SPARE			RSVD	PRIO0			RSVD	PID		

Downloaded from Arrow.com.

USB_GLD_MSR_CONFIG Bit Descriptions

Bit	Name	Description
63:36	RSVD	**Reserved.** Reads return 0.
35	SSDEN	**Serial Short Detect Enable.** When set, this bit enables the short detection circuit for the serial PHY interface.
34	ENPW	**Emulate Non-Posted Writes.** When set, this bit enforces strict ordering by finishing every GeodeLink™ write burst with a read request on the burst's start address, thus ensuring that data has reached the memory before downstream read requests are accepted.
33	OHCPD	**OHC Prefetch Disable.** When set, the GLIU to AHB bridge does not use prefetching for OHC bus master accesses.
32	PFEN	**Prefetch enable.** When set, bus master read performance is improved.
31:11	RSVD	**Reserved.** Reads return 0.
10:8	SPARE	**Reserved.** These bits are R/W but control no hardware.
7	RSVD	**Reserved.** Reads return 0.
6:4	PRIO0	**Primary Priority Level.**
3	RSVD	**Reserved.** Reads return 0.
2:0	PID	**Priority Domain.**

6.4.1.3 GLD SMI MSR (USB_GLD_MSR_SMI)

MSR Address 51200002h
Type R/W
Reset Value 00000000_0000002Fh

USB_GLD_MSR_SMI Register Map

63	62	61	60	59	58	57	56	55	54	53	52	51	50	49	48	47	46	45	44	43	42	41	40	39	38	37	36	35	34	33	32
RSVD																										EHCSSTAT	OHCSSTAT	UOCISTAT	UDCISTAT	EHCISTAT	OHCISTAT
31	30	29	28	27	26	25	24	23	22	21	20	19	18	17	16	15	14	13	12	11	10	9	8	7	6	5	4	3	2	1	0
RSVD																										EHCSMIIMSK	OHCSMIMSK	UOCI2SMIMSK	UDCI2SMIMSK	EHCI2SMIMSK	OHCI2SMIMSK

Downloaded from Arrow.com.

USB_GLD_MSR_SMI Bit Descriptions

Bit	Name	Description
63:38	RSVD	**Reserved.** Reads return 0.
37	EHCSSTAT	**EHC Controller SMI Status Register.** This register is set when the controller generates an SMI. The interrupt condition is cleared inside the controller. Writing a 1 clears this bit. Writing 0 has no effect.
36	OHCSSTAT (Note 1)	**OHC Controller SMI Status Register.** This register is set when the controller generates an SMI. The interrupt condition is cleared inside the controller. Writing a 1 clears this bit. Writing 0 has no effect.
35	UOCISTAT	**USB Option Controller Interrupt Status Register.** This register is set when the controller generates an interrupt. The interrupt condition is cleared inside the controller. Writing a 1 clears this bit. Writing 0 has no effect.
34	UDCISTAT	**UDC Interrupt Status Register.** This register is set when the controller generates an interrupt. The interrupt condition is cleared inside the controller. Writing a 1 clears this bit. Writing 0 has no effect.
33	EHCISTAT	**EHC Interrupt Status Register.** This register is set when the controller generates an interrupt. The interrupt condition is cleared inside the controller. Writing a 1 clears this bit. Writing 0 has no effect.
32	OHCISTAT	**OHC Interrupt Status Register.** This register is set when the controller generates an interrupt. The interrupt condition is cleared inside the controller. Writing a 1 clears this bit. Writing 0 has no effect.
31:6	RSVD	**Reserved.** Reads return 0.
5	EHCSMIMSK	**EHC SMI to ASMI Mask.**
4	OHCSMIMSK	**OHC SMI to ASMI Mask.**
3	UOCI2SMIMSK	**USB Option Controller Interrupt to ASMI Route Mask.**
2	UDCI2SMIMSK	**UDC Interrupt to ASMI Route Mask.**
1	EHCI2SMIMSK	**EHC Interrupt to ASMI Route Mask.**
0	OHCI2SMIMSK	**OHC Interrupt to ASMI Route Mask.**

Note 1. The status bits [36:32] are set with the rising edge of an event. This happens under two conditions:

1. When the corresponding mask bit is already set, then the status bit gets set with the rising edge of the interrupt event.

2. When the corresponding mask bit is reset and an interrupt event is pending, then the status bit gets set when the mask bit is set (set on mask toggle).

Downloaded from Arrow.com.

6.4.1.4 GLD Error MSR (USB_GLD_MSR_ERROR)

MSR Address 51200003h
Type R/W
Reset Value 00000000_00000000h

USB_GLD_MSR_ERROR Register Map

63	62	61	60	59	58	57	56	55	54	53	52	51	50	49	48	47	46	45	44	43	42	41	40	39	38	37	36	35	34	33	32
RSVD																														UADDRSTS	UTYPESTS
31	30	29	28	27	26	25	24	23	22	21	20	19	18	17	16	15	14	13	12	11	10	9	8	7	6	5	4	3	2	1	0
RSVD																														UADDRMSK	UTYPEMSK

USB_GLD_MSR_ERROR Bit Descriptions

Bit	Name	Description
63:34	RSVD	**Reserved.** Reads return 0.
33	UADDRSTS	**Unexpected Address.** This bit is set by hardware when an unexpected type is received on a GeodeLink™ request. Software must write a 1 to clear.
32	UTYPESTS	**Unexpected Type.** This bit is set by hardware when an unexpected type is received on a GeodeLink request. Software must write a 1 to clear.
31:2	RSVD	**Reserved.** Reads return 0.
1	UADDRMSK	**Unexpected Address Mask.** When this bit is set, an unexpected address received with a GeodeLink request asserts the GeodeLink error flag.
0	UTYPEMSK	**Unexpected Type Mask.** When this bit is set, an unexpected type received with a GeodeLink request asserts the GeodeLink error flag.

6.4.1.5 GLD Diagnostic MSR (USB_GLD_MSR_DIAG)

MSR Address 51200005h
Type R/W
Reset Value 00000000_00000000h

Downloaded from Arrow.com.

6.4.2 USB Specific MSRs

This register is reserved for internal use by AMD and should not be written to.

6.4.2.1 USB OHC Base Address (USBMSROHCB)

MSR Address 51200008h
Type R/W
Reset Value 00000000_00000000h

USBMSROHCB Register Map

63	62	61	60	59	58	57	56	55	54	53	52	51	50	49	48	47	46	45	44	43	42	41	40	39	38	37	36	35	34	33	32
RSVD																											PMESTS	PMEEN	BMEN	MEMEN	SPARE
31	30	29	28	27	26	25	24	23	22	21	20	19	18	17	16	15	14	13	12	11	10	9	8	7	6	5	4	3	2	1	0
OHCB																								RSVD							

USBMSROHCB Bit Descriptions

Bit	Name	Description
63:37	RSVD	**Reserved.** Read as 0.
36	PMESTS	**PME Status.** This bit is set when the controller asserts PME independent of the state of PMEEN (bit 35).
35	PMEEN	**PME Enable.** If set, the controller is allowed to generate PMEs.
34	BMEN	**OHC Bus Master Enable.** If set, the arbiter is allowed to arbitrate the OHC bus master.
33	MEMEN	**OHC Memory Enable.** If set, memory space is enabled. If cleared, accesses to the memory space are blocked.
32	SPARE	**Reserved.** This bit does not control any hardware.
31:8	OHCB	**OHC Base Address.** Base address providing for a memory space of 256 bytes.
7:0	RSVD	**Reserved.** Read as 0.

6.4.2.2 USB EHC Base Address (USBMSREHCB)

MSR Address 51200009h
Type R/W
Reset Value 00000000_00000000h

USBMSREHCB Register Map

63	62	61	60	59	58	57	56	55	54	53	52	51	50	49	48	47	46	45	44	43	42	41	40	39	38	37	36	35	34	33	32
RSVD		LEGSMISTS						RSVD		LECSMIEN						RSVD		FLADJ						RSVD			PMESTS	PMEEN	BMEN	MEMEN	SPARE
31	30	29	28	27	26	25	24	23	22	21	20	19	18	17	16	15	14	13	12	11	10	9	8	7	6	5	4	3	2	1	0
EHCB																								RSVD							

Downloaded from Arrow.com.

USBMSROHCB Bit Descriptions

Bit	Name	Description
63:62	RSVD	**Reserved.** Read as 0.
61:56	LEGSMISTS	**Legacy SMI Status.** Shadow bits from USBSTS (EHC Memory Offset 14h[5:0]) are used for legacy SMI support. 61: Async Advance 60: Host System Error 59: Frame List Rollover 58: Port Change Detect 57: USD Error 56: USB Complete
55:54	RSVD	**Reserved.** Read as 0.
53:48	LECSMIEN	**Legacy SMI Enable.** These bits control whether the corresponding status bit in LEGSMISTS (bit [61:56]) can cause an SMI. 53: SMI on Async Advance 52: SMI on Host System Error 51: SMI on Frame List Rollover 50: SMI on Port Change Detect 49: SMI on USD Error 48: SMI on USB Complete
47:46	RSVD	**Reserved.** Read as 0.
45:40	FLADJ	**Frame Length Adjustment.** The Start of Frame (SOF) cycle time is equal to 59488 + (16*this value). The default of 20h gives a SOF cycle time of 60000. FrameLength (HS bit times) — FLADJ value 59488 — 00h 59504 — 01h 59520 — 02h … — … 59984 — 1Fh 60000 — 20h … — … 60480 — 3Eh 60496 — 3Fh
39:37	RSVD	**Reserved.** Read as 0.
36	PMESTS	**PME Status.** This bit is set when the controller asserts PME independent of the state of PMEEN (bit 35).
35	PMEEN	**PME Enable.** If set, the controller is allowed to generate PMEs.
34	BMEN	**EHC Bus Master Enable.** If set, the arbiter is allowed to arbitrate the EHC bus master.
33	MEMEN	**EHC Memory Enable.** If set, memory space is enabled. If cleared, accesses to the memory space are blocked.
32	SPARE	**Reserved.** This bit does not control any hardware.
31:8	EHCB	**EHC Base Address.** Base address providing for a memory space of 256 bytes.
7:0	RSVD	**Reserved.** Read as 0.

Downloaded from Arrow.com.

6.4.2.3 USB Device Controller Base Address (USBMSRUDCB)

MSR Address 5120000Ah
Type R/W
Reset Value 00000000_00000000h

USBMSRUDCB Register Map

63	62	61	60	59	58	57	56	55	54	53	52	51	50	49	48	47	46	45	44	43	42	41	40	39	38	37	36	35	34	33	32
RSVD																											PMESTS	PMEEN	BMEN	MEMEN	SPARE
31	30	29	28	27	26	25	24	23	22	21	20	19	18	17	16	15	14	13	12	11	10	9	8	7	6	5	4	3	2	1	0
UDCB																			RSVD												

USBMSRUDCB Bit Descriptions

Bit	Name	Description
63:37	RSVD	**Reserved.** Read as 0.
36	PMESTS	**PME Status.** This bit is set when the controller asserts PME independent of the state of PMEEN (bit 35).
35	PMEEN	**PME Enable.** If set, the controller is allowed to generate PMEs.
34	BMEN	**USB Device Controller Bus Master Enable.** If set, the arbiter is allowed to arbitrate the OHC bus master.
33	MEMEN	**USB Device Controller Memory Enable.** If set, memory space is enabled. If cleared, accesses to the memory space are blocked.
32	SPARE	**Reserved.** This bit does not control any hardware.
31:13	UDCB	**USB Device Controller Base Address.** Base address providing for a memory space of 8 KB.
12:0	RSVD	**Reserved.** Read as 0.

6.4.2.4 USB Option Controller Base Address (USBMSRUOCB)

MSR Address 5120000Bh
Type R/W
Reset Value 00000000_00000000h

USBMSRUOCB Register Map

63	62	61	60	59	58	57	56	55	54	53	52	51	50	49	48	47	46	45	44	43	42	41	40	39	38	37	36	35	34	33	32
RSVD																											PMESTS	PMEEN	RSVD	MEMEN	SPARE
31	30	29	28	27	26	25	24	23	22	21	20	19	18	17	16	15	14	13	12	11	10	9	8	7	6	5	4	3	2	1	0
UOCB																								RSVD							

Downloaded from Arrow.com.

USBMSRUOCB Bit Descriptions

Bit	Name	Description
63:37	RSVD	**Reserved.** Read as 0.
36	PMESTS	**PME Status.** This bit is set when the controller asserts PME independent of the state of PMEEN (bit 35).
35	PMEEN	**PME Enable.** If set, the controller is allowed to generate PMEs.
34	RSVD	**Reserved.**
33	MEMEN	**USB Option Controller Memory Enable.** If set, memory space is enabled. If cleared, accesses to the memory space are blocked.
32	SPARE	**Reserved.** This bit does not control any hardware
31:8	UOCB	**USB Option Controller Base Address.** Base address providing for a memory space of 256 bytes.
7:0	RSVD	**Reserved.** Read as 0.

6.4.3 USB Open Host Controller Interface Native Registers

6.4.3.1 Host Controller Interface Revision (USB_HcRevision)

OHC Memory Offset 00h
Type RO
Reset Value 00000110h

USB_HcRevision Register Map

31	30	29	28	27	26	25	24	23	22	21	20	19	18	17	16	15	14	13	12	11	10	9	8	7	6	5	4	3	2	1	0
RSVD																							LGCYSUP	REV							

USB_HcRevision Bit Descriptions

Bit	Name	Description
31:8	RSVD	**Reserved.** Read as 0.
8	LGCYSUP	**Legacy Support.** This field is set to 1 to indicate that the legacy support registers are present in this host controller (HC).
7:0	REV	**Revision.** Indicates the Open HCI Specification revision number implemented by the hardware.

Downloaded from Arrow.com.

6.4.3.2 Host Controller Control (USB_HcControl)

OHC Memory Offset 04h
Type R/W
Reset Value 00000000h

USB_HcControl Register Map

31	30	29	28	27	26	25	24	23	22	21	20	19	18	17	16	15	14	13	12	11	10	9	8	7	6	5	4	3	2	1	0
RSVD																					RWE	RWC	IR	HCFS		BLE	CLE	IE	PLE	CSBR	

USB_HcControl Bit Descriptions

Bit	Name	Description
31:11	RSVD	**Reserved.** Read as 0.
10	RWE	**Remote Wakeup Connected Enable.** This bit is used by the host controller driver (HCD) to enable or disable the remote wakeup feature upon the detection of upstream resume signaling. When this bit is set, and the ResumeDetected bit (Memory Offset 0Ch[3]) is set, a remote wakeup is signaled to the host system. Setting this bit has no impact on the generation of hardware interrupts.
9	RWC	**Remote Wakeup Connected.** This bit indicates whether the HC supports remote wakeup signaling. If remote wakeup is supported and used by the system, it is the responsibility of system firmware to set this bit during POST. The HC clears the bit upon a hardware reset but does not alter it upon a software reset. Remote wakeup signaling of the host system is host-bus specific and is not described in this specification.
8	IR	**Interrupt Routing.** This bit is used for interrupt routing. 0: Interrupts routed to normal interrupt mechanism (INT). 1: Interrupts routed to SMI.
7:6	HCFS	**Host Controller Functional State.** A transition to UsbOperational from another state causes SOF generation to begin 1 ms later. The HCD may determine whether the HC has begun sending SOFs by reading the SOF field (OHC Memory Offset 0Ch[2]). This field may be changed by the HC only when in the UsbSuspend state. The HC may move from the UsbSuspend state to the UsbResume state after detecting the resume signaling from a downstream port. The HC enters UsbSuspend after a software reset, whereas it enters UsbReset after a hardware reset. The latter also resets the Root Hub and asserts subsequent reset signaling to downstream ports. 00: UsbReset. 01: UsbResume. 10: UsbOperational. 11: UsbSuspend.
5	BLE	**Bulk List Enable.** This bit is set to enable the processing of the Bulk List in the next frame. If cleared by the HCD, processing of the Bulk List does not occur after the next SOF. The HC checks this bit whenever it determines to process the list. When disabled, the HCD may modify the list. If USB_HcBulkCurrentED (Memory Offset 2Ch) is pointing to an endpoint direction to be removed, the HCD must advance the pointer by updating USB_HcBulkCurrentED before re-enabling processing of the list.
4	CLE	**Control List Enable.** This bit is set to enable the processing of the Control List in the next frame. If cleared by the HCD, processing of the Control List does not occur after the next SOF. The HC must check this bit whenever it determines to process the list. When disabled, the HCD may modify the list. If USB_HcControlCurrentED (Memory Offset 24h) is pointing to an endpoint direction to be removed, the HCD must advance the pointer by updating USB_HcControlCurrentED before re-enabling processing of the list.

Downloaded from Arrow.com.

USB_HcControl Bit Descriptions (Continued)

Bit	Name	Description
3	IE	**Isochronous Enable.** This bit is used by the HCD to enable/disable processing of isochronous endpoint directions. While processing the Periodic List in a frame, the HC checks the status of this bit when it finds an Isochronous endpoint direction (F=1). If set (enabled), the HC continues processing the endpoint directions. If cleared (disabled), the HC halts processing of the Periodic List (which now contains only isochronous endpoint directions) and begins processing the Bulk/Control lists. Setting this bit is guaranteed to take effect in the next frame (not the current frame).
2	PLE	**Periodic List Enable.** This bit is set to enable the processing of the Periodic List in the next frame. If cleared by the HCD, processing of the Periodic List does not occur after the next SOF. The HC must check this bit before it starts processing the list.
1:0	CBSR	**Control Bulk Service Ratio.** This specifies the service ratio between control and bulk endpoint directions. Before processing any of the Nonperiodic Lists, the HC must compare the ratio specified with its internal count of how many nonempty control endpoint directions have been processed, in determining whether to continue serving another control endpoint direction or switching to bulk endpoint directions. The internal count is retained when crossing the frame boundary. In case of reset, the HCD is responsible for restoring this value. CBSR No. of Control EDs Over Bulk EDs Served 00 1: 1 01 2: 1 10 3: 1 00 4: 1

6.4.3.3 Host Controller Command Status (USB_HcCommandStatus)

OHC Memory Offset 08h
Type R/W
Reset Value 00000000h

USB_HcCommandStatus Register Map

31	30	29	28	27	26	25	24	23	22	21	20	19	18	17	16	15	14	13	12	11	10	9	8	7	6	5	4	3	2	1	0
RSVD														SOC		RSVD												OCR	BLF	CLF	HCR

Downloaded from Arrow.com.

USB_HcCommandStatus Bit Descriptions

Bit	Name	Description
31:18	RSVD	**Reserved.** Read as 0.
17:16	SOC	**Schedule Overrun Count.** These bits are incremented on each scheduling overrun error. They are initialized to 00 and wrap around at 11. They are incremented when a scheduling overrun is detected even if SchedulingOverrun (OHC Memory Offset 0Ch[0]) has already been set. This is used by the HCD to monitor any persistent scheduling problems.
15:4	RSVD	**Reserved.** Read as 0.
3	OCR	**Ownership Change Request.** This bit is set by an OS HCD to request a change of control of the HC. When set, the HC sets the OwnershipChange field (OHC Memory Offset 0Ch[30]). After the changeover, this bit is cleared and remains so until the next request from the OS HCD.
2	BLF	**Bulk List Filled.** This bit is used to indicate whether there are any transfer descriptors on the Bulk List. It is set by the HCD whenever it adds a transfer descriptor to an endpoint direction in the Bulk List. When the HC begins to process the head of the Bulk List, it checks BLF. As long as BLF is 0, the HC does not start processing the Bulk List. If BLF is 1, the HC starts processing the Bulk List and sets BLF to 0. If the HC finds a transfer descriptor on the list, then the HC sets BLF to 1 causing the Bulk List processing to continue. If no transfer descriptor is found on the Bulk List, and if the HCD does not set BLF, then BLF is still 0 when the HC completes processing the Bulk List and Bulk List processing stops.
1	CLF	**Control List Filled.** This bit is used to indicate whether there are any transfer descriptors on the Control List. It is set by the HCD whenever it adds a transfer descriptor to an endpoint direction in the Control List. When the HC begins to process the head of the Control List, it checks CLF. As long as CLF is 0, the HC does not start processing the Control List. If CLF is 1, the HC starts processing the Control List and sets CLF to 0. If the HC finds a transfer descriptor on the list, then the HC sets CLF to 1 causing the Control List processing to continue. If no transfer descriptor is found on the Control List, and if the HCD does not set CLF, then CLF is still 0 when the HC completes processing the Control List and Control List processing stops.
0	HCR	**Host Controller Reset.** This bit is set by the HCD to initiate a software reset of the HC. Regardless of the functional state of the HC, it moves to the UsbSUSPEND state in which most of the operational registers are reset except those stated otherwise (e.g., the InterruptRouting field of USB_HcControl (Memory Offset 04h[8])) and no Host bus accesses are allowed. This bit is cleared by the HC upon completion of the reset operation. The reset operation must be completed within 10 ms. This bit, when set, should not cause a reset to the Root Hub and no subsequent reset signaling should be asserted to its downstream ports.

Downloaded from Arrow.com.

6.4.3.4 Host Controller Interrupt Status (USB_HcInterruptStatus)

OHC Memory Offset 0Ch
Type R/W
Reset Value 00000000h

All bits are set by the hardware and cleared by software.

USB_HcInterruptStatus Register Map

31	30	29	28	27	26	25	24	23	22	21	20	19	18	17	16	15	14	13	12	11	10	9	8	7	6	5	4	3	2	1	0
RSVD	OC	RSVD																							RHSC	FNO	UE	RD	SOF	WDH	SO

USB_HcInterruptStatus Bit Descriptions

Bit	Name	Description
31	RSVD	**Reserved.** Read as 0.
30	OC	**Ownership Change.** This bit is set when the OwnershipChangeRequest bit (OHC Memory Offet 08h[3]) is set.
29:7	RSVD	**Reserved.** Read as 0.
6	RHSC	**Root Hub Status Change.** This bit is set when the content of HcRhStatus (Memory Offset 50h) or the content of any USBHcRhPortStatus[x] (OHC Memory Offset 54h, 58h, 5Ch, 60h) register has changed.
5	FNO	**Frame Number Overflow.** This bit is set when bit 15 of FrameNumber changes value (OHC Memory Offset 3Ch[15]).
4	UE (RO)	**Unrecoverable Error (Read Only).** This event is not implemented and is hard coded to 0. HCD clears this bit.
3	RD	**Resume Detected.** This bit is set when the HC detects resume signaling on a down-stream port.
2	SOF	**Start Of Frame.** This bit is set when the Frame Management block signals a Start Of Frame event.
1	WDH	**Writeback Done Head.** This bit is set after the HC has written HcDoneHead (OHC Memory Offset 30h[31:4]).
0	SO	**Scheduling Overrun.** This bit is set when the List Processor determines a Schedule Overrun has occurred.

Downloaded from Arrow.com.

6.4.3.5 Host Controller Interrupt Enable (USB_HcInterruptEnable)

OHC Memory Offset 10h
Type R/W
Reset Value 00000000h

Each enable bit corresponds to an associated interrupt bit in USB_HcInterruptStatus (OHC Memory Offset 0Ch). This register is used to control which events generate a hardware interrupt. When a bit is set in USB_HcInterruptStatus and the corresponding bit in the USB_HcInterruptEnable is set and the MasterInterruptEnable bit (bit 31) is set, then a hardware interrupt is requested on the host bus. Writing a 1 to a bit in this register sets the corresponding bit, while writing 0 leaves the bit unchanged.

USB_HcInterruptEnable Register Map

31	30	29	28	27	26	25	24	23	22	21	20	19	18	17	16	15	14	13	12	11	10	9	8	7	6	5	4	3	2	1	0
MIE	OC	RSVD																							RHSC	FNO	UE	RD	SF	WDH	SO

USB_HcInterruptEnable Bit Descriptions

Bit	Name	Description
31	MIE	**Master Interrupt Enable.** This bit is a global interrupt enable. Writing a 1 allows interrupts to be enabled.
30	OC	**Ownership Change Enable.** 0: Ignore. 1: Enable interrupt generation due to Ownership Change.
29:7	RSVD	**Reserved.** Read as 0.
6	RHSC	**RootHub Status Change Enable.** 0: Ignore. 1: Enable interrupt generation due to Root Hub Status Change.
5	FNO	**Frame Number Overflow Enable.** 0: Ignore. 1: Enable interrupt generation due to Frame Number Overflow.
4	UE	**Unrecoverable Error Enable.** This event is not implemented. All writes to this bit are ignored.
3	RD	**Resume Detected Enable.** 0: Ignore. 1: Enable interrupt generation due to Resume Detected.
2	SF	**Start Of Frame Enable.** 0: Ignore. 1: Enable interrupt generation due to Start Of Frame.
1	WDH	**Writeback Done Head Enable.** 0: Ignore. 1: Enable interrupt generation due to Writeback Done Head.
0	SO	**Scheduling Overrun Enable.** 0: Ignore. 1: Enable interrupt generation due to Scheduling Overrun.

Downloaded from Arrow.com.

6.4.3.6 Host Controller Interrupt Disable (USB_HcInterruptDisable)

OHC Memory Offset 14h
Type R/W
Reset Value 00000000h

Each disable bit corresponds to an associated interrupt bit in USB_HcInterruptStatus (OHC Memory Offset 0Ch). This register is coupled with USB_HcInterruptEnable (OHC Memory Offset 10h). Thus, writing a 1 to a bit in this register clears the corresponding bit in the USB_HcInterruptEnable register, whereas writing 0 to a bit in this register leaves the corresponding bit in the USB_HcInterruptEnable register unchanged.

USB_HcInterruptDisable Register Map

31	30	29	28	27	26	25	24	23	22	21	20	19	18	17	16	15	14	13	12	11	10	9	8	7	6	5	4	3	2	1	0
MIE	OC	RSVD																							RHSC	FNO	UE	RD	SF	WDH	SO

USB_HcInterruptDisable Bit Descriptions

Bit	Name	Description
31	MIE	**Master Interrupt Disable.** Global interrupt disable. A write of 1 disables all interrupts.
30	OC	**Ownership Change Disable.** 0: Ignore. 1: Disable interrupt generation due to Ownership Change.
29:7	RSVD	**Reserved.** Read as 0.
6	RHSC	**Root Hub Status Change Disable.** 0: Ignore. 1: Disable interrupt generation due to Root Hub Status Change.
5	FNO	**Frame Number Overflow Disable.** 0: Ignore. 1: Disable interrupt generation due to Frame Number Overflow.
4	UE	**Unrecoverable Error Disable.** This event is not implemented. All writes to this bit will be ignored.
3	RD	**Resume Detected Disable.** 0: Ignore. 1: Disable interrupt generation due to Resume Detected.
2	SF	**Start Of Frame Disable.** 0: Ignore. 1: Disable interrupt generation due to Start of Frame.
1	WDH	**Writeback Done Head Disable.** 0: Ignore. 1: Disable interrupt generation due to Writeback Done Head.
0	SO	**Scheduling Overrun Disable.** 0: Ignore. 1: Disable interrupt generation due to Scheduling Overrun.

Downloaded from Arrow.com.

6.4.3.7 Host Controller HCCA (USB_HcHCCA)

OHC Memory Offset 18h
Type R/W
Reset Value 00000000h

USB_HcHCCA Register Map

31	30	29	28	27	26	25	24	23	22	21	20	19	18	17	16	15	14	13	12	11	10	9	8	7	6	5	4	3	2	1	0
HCCA																								RSVD							

USB_HcHCCA Bit Descriptions

Bit	Name	Description
31:8	HCCA	**HCCA.** This is the base address of the HC communication area.
7:0	RSVD	**Reserved.** Read as 0.

6.4.3.8 Host Controller Current Period List ED (USB_HcPeriodCurrentED)

OHC Memory Offset 1Ch
Type RO
Reset Value 00000000h

USB_HcPeriodCurrentED Register Map

31	30	29	28	27	26	25	24	23	22	21	20	19	18	17	16	15	14	13	12	11	10	9	8	7	6	5	4	3	2	1	0
PCED																												RSVD			

USB_HcPeriodCurrentED Bit Descriptions

Bit	Name	Description
31:4	PCED	**Period Current ED.** This is used by the HC to point to the head of one of the Periodic Lists, which will be processed in the current frame. The content of this register is updated by the HC after a periodic endpoint direction has been processed.The HCD may read the content in determining which endpoint direction is currently being processed at the time of reading.
3:0	RSVD	**Reserved.** Read as 0.

6.4.3.9 Host Controller Control List Head ED (USB_HcControlHeadED)

OHC Memory Offset 20h
Type R/W
Reset Value 00000000h

USB_HcControlHeadED Register Map

31	30	29	28	27	26	25	24	23	22	21	20	19	18	17	16	15	14	13	12	11	10	9	8	7	6	5	4	3	2	1	0
CHED																												RSVD			

Downloaded from Arrow.com.

USB_HcControlHeadED Bit Descriptions

Bit	Name	Description
31:4	CHED	**Control Head ED.** The HC traverses the Control List starting with the Control Head ED pointer. The content is loaded from HCCA (OHC Memory Offset 18h) during the initialization of the HC.
3:0	RSVD	**Reserved.** Read as 0.

6.4.3.10 Host Controller Current Control List ED (USB_HcControlCurrentED)

OHC Memory Offset 24h
Type R/W
Reset Value 00000000h

USB_HcControlCurrentED Register Map

31	30	29	28	27	26	25	24	23	22	21	20	19	18	17	16	15	14	13	12	11	10	9	8	7	6	5	4	3	2	1	0
CCED																												RSVD			

USB_HcControlCurrentED Bit Descriptions

Bit	Name	Description
31:4	CCED	**Control Current ED.** This pointer is advanced to the next endpoint direction after serving the present one. The HC continues processing the list from where it left off in the last frame. When it reaches the end of the Control List, the HC checks OHC Memory Offset 08h[1]. If set, it copies the content of USB_HcControlHeadED (OHC Memory Offset 20h) to USB_HcControlCurrentED and clears the bit. If not set, it does nothing. The HCD is allowed to modify this register only when OHC Memory Offset 04h[4] is cleared. When set, the HCD only reads the instantaneous value of this register. Initially, this is set to zero to indicate the end of the Control List.
3:0	RSVD	**Reserved.** Read as 0.

6.4.3.11 Host Controller Bulk List Head ED (USB_HcBulkHeadED)

OHC Memory Offset 28h
Type R/W
Reset Value 00000000h

USB_HcBulkHeadED Register Map

31	30	29	28	27	26	25	24	23	22	21	20	19	18	17	16	15	14	13	12	11	10	9	8	7	6	5	4	3	2	1	0
BHED																												RSVD			

USB_HcBulkHeadED Bit Descriptions

Bit	Name	Description
31:4	BHED	**Bulk Head ED.** The HC traverses the Bulk List starting with the USB_HcBulkHeadED pointer. The content is loaded from HCCA (OHC Memory Offset 18h[31:8]) during the initialization of the HC.
3:0	RSVD	**Reserved.** Read as 0.

Downloaded from Arrow.com.

6.4.3.12 Host Controller Current Bulk List ED (USB_HcBulkCurrentED)

OHC Memory Offset 2Ch
Type R/W
Reset Value 00000000h

USB_HcBulkCurrentED Register Map

31	30	29	28	27	26	25	24	23	22	21	20	19	18	17	16	15	14	13	12	11	10	9	8	7	6	5	4	3	2	1	0
BCED																												RSVD			

USB_HcBulkCurrentED Bit Descriptions

Bit	Name	Description
31:4	BCED	**Bulk Current ED.** This is advanced to the next endpoint direction after the HC has served the present one. The HC continues processing the list from where it left off in the last frame. When it reaches the end of the Bulk List, the HC checks OHC Memory Offset 08h[1]. If set, it copies the content of USB_HcBulkHeadED (OHC Memory Offset 28h) to USB_HcBulkCurrentED and clears the bit. If not set, it does nothing. The HCD is only allowed to modify this register when OHC Memory Offset 04h[5] is cleared. When set, the HCD only reads the instantaneous value of this register. This is initially set to zero to indicate the end of the Bulk List.
3:0	RSVD	**Reserved.** Read as 0.

6.4.3.13 Host Controller Current Done List Head ED (USB_HcDoneHead)

OHC Memory Offset 30h
Type RO
Reset Value 00000000h

USB_HcDoneHead Register Map

31	30	29	28	27	26	25	24	23	22	21	20	19	18	17	16	15	14	13	12	11	10	9	8	7	6	5	4	3	2	1	0
DH																												RSVD			

USB_HcDoneHead Bit Descriptions

Bit	Name	Description
31:4	DH	**Done Head.** When a transfer descriptor is completed, the HC writes the content of USB_HcDoneHead to the NextTD field of the transfer descriptor. The HC then over-writes the content of USB_HcDoneHead with the address of this transfer descriptor. This is set to zero whenever the HC writes the content of this register to HCCA (OHC Memory Offset 18h[31:8]). It also sets WDH (OHC Memory Offset 0Ch[1]).
3:0	RSVD	**Reserved.** Read as 0.

Downloaded from Arrow.com.

6.4.3.14 Host Controller Frame Interval (USB_HcFmInterval)

OHC Memory Offset 34h
Type R/W
Reset Value 00002EDFh

USB_HcFmInterval Register Map

31	30	29	28	27	26	25	24	23	22	21	20	19	18	17	16	15	14	13	12	11	10	9	8	7	6	5	4	3	2	1	0
FIT	FSMPS															RSVD		FI													

USB_HcFmInterval Bit Descriptions

Bit	Name	Description
31	FIT	**Frame Interval Toggle.** The HCD toggles this bit whenever it loads a new value to Frame Interval (bit [13:0]).
30:16	FSMPS	**FS Largest Data Packet.** This field specifies a value that is loaded into the Largest Data Packet Counter at the beginning of each frame. The counter value represents the largest amount of data in bits that can be sent or received by the HC in a single transaction at any given time without causing scheduling overrun. The field value is calculated by the HCD.
15:14	RSVD	**Reserved.** Read as 0.
13:0	FI	**Frame Interval.** This specifies the interval between two consecutive SOFs in bit times. The nominal value is set to be 11,999. The HCD should store the current value of this field before resetting the HC by setting the Host Controller Reset field (OHC Memory Offset 08h[0]) as this causes the HC to reset this field to its nominal value. The HCD may choose to restore the stored value upon the completion of the Reset sequence.

6.4.3.15 Host Controller Frame Remaining (USB_HcFrameRemaining)

OHC Memory Offset 38h
Type RW
Reset Value 00000000h

USB_HcFrameRemaining Register Map

31	30	29	28	27	26	25	24	23	22	21	20	19	18	17	16	15	14	13	12	11	10	9	8	7	6	5	4	3	2	1	0
FRT	RSVD																	FR													

USB_HcFrameRemaining Bit Descriptions

Bit	Name	Description
31	FRT	**Frame Remaining Toggle.** This bit is loaded from the Frame Interval Toggle field (OHC Memory Offset 34h[31]) whenever Frame Remaining (bits [13:0]) reaches 0. This bit is used by the HCD for the synchronization between Frame Interval (OHC Memory Offset 34h[13:0]) and Frame Remaining (bits [13:0]).
30:14	RSVD	**Reserved.** Read as 0.
13:0	FR	**Frame Remaining.** This counter is decremented at each bit time. When it reaches zero, it is reset by loading the Frame Interval (OHC Memory Offset 34h[13:0]) value at the next bit time boundary. When entering the UsbOperational state, the HC reloads the content with the Frame Interval (OHC Memory Offset 34h[13:0]) and uses the updated value from the next SOF.

Downloaded from Arrow.com.

6.4.3.16 Host Controller Frame Number (USB_HcFmNumber)

OHC Memory Offset 3Ch
Type R/W
Reset Value 00000000h

USB_HcFmNumber Register Map

31	30	29	28	27	26	25	24	23	22	21	20	19	18	17	16	15	14	13	12	11	10	9	8	7	6	5	4	3	2	1	0
RSVD																FN															

USB_HcFmNumber Bit Descriptions

Bit	Name	Description
31:16	RSVD	**Reserved.** Read as 0.
15:0	FN	**Frame Number.** This bit is incremented when USB_HcFmRemaining (OHC Memory Offset 38h) is reloaded. It is rolled over to 0h after FFFFh. When entering the UsbOperational state, this is incremented automatically. The content is written to HCCA (OHC Memory Offset 18h[31:8]) after the HC has incremented the Frame Number at each frame boundary and sent a SOF, but before the HC reads the first endpoint direction in that frame. After writing to HCCA, the HC sets the SOF bit (OHC Memory Offset 0Ch[2]).

6.4.3.17 Host Controller Periodic Start (USB_HcPeriodicStart)

OHC Memory Offset 40h
Type R/W
Reset Value 00000000h

USB_HcPeriodicStart Register Map

31	30	29	28	27	26	25	24	23	22	21	20	19	18	17	16	15	14	13	12	11	10	9	8	7	6	5	4	3	2	1	0
RSVD																		PS													

USB_HcPeriodicStart Bit Descriptions

Bit	Name	Description
31:14	RSVD	**Reserved.** Read as 0.
13:0	PS	**Periodic Start.** After a hardware reset, this field is cleared. Periodic Start is then set by the HCD during the HC initialization. The value is calculated roughly as 10% off from USB_HcFmInterval (Memory Offset 34h). A typical value is 3E67h. When USB_HcFmRemaining (Memory Offset 38h) reaches the value specified, processing of the Periodic Lists has priority over Control/Bulk processing. The HC therefore starts processing the Interrupt list after completing the current control or bulk transaction that is in progress.

Downloaded from Arrow.com.

6.4.3.18 Host Controller Low Speed Threshold (USB_HcLSThreshold)

OHC Memory Offset 44h
Type R/W
Reset Value 00000628h

USB_HcLSThreshold Register Map

31	30	29	28	27	26	25	24	23	22	21	20	19	18	17	16	15	14	13	12	11	10	9	8	7	6	5	4	3	2	1	0
RSVD																				LST											

USB_HcLSThreshold Bit Descriptions

Bit	Name	Description
31:12	RSVD	**Reserved.** Read as 0.
11:0	LST	**LS Threshold.** This field contains a value that is compared to the Frame Remaining field (OHC Memory Offset 38h[13:0])prior to initiating a low speed transaction. The transaction is started only if Frame Remaining is greater or equal to this field. The value is calculated by the HCD with the consideration of transmission and setup overhead.

6.4.3.19 Host Controller Root Hub Descriptor A (USB_HcRhDescriptorA)

OHC Memory Offset 48h
Type R/W
Reset Value 10000904h

USB_HcRhDescriptorA Register Map

31	30	29	28	27	26	25	24	23	22	21	20	19	18	17	16	15	14	13	12	11	10	9	8	7	6	5	4	3	2	1	0
POTPGT								RSVD											NOCP	OCPM	DT	NPS	PSM	NDP							

USB_HcRhDescriptorA Bit Descriptions

Bit	Name	Description
31:24	POTPGT	**PowerOn To PowerGood Time.** This byte specifies the duration the HCD waits before accessing a powered-on port of the Root Hub.The unit of time is 2 ms. The duration is calculated as POTPGT * 2 ms.
23:13	RSVD	**Reserved.** Read as 0.
12	NOCP	**No Over Current Protection.** This bit describes how the over current status for the Root Hub ports are reported. When this bit is cleared, the Over Current Protection Mode field (bit 11) specifies global or per-port reporting. 0: Over current status is reported collectively for all downstream ports. 1: No over current protection supported.
11	OCPM	**Over Current Protection Mode.** This bit describes how the over current status for the Root Hub ports are reported. This field is valid only if the NoOverCurrent Protection field (bit 12) is cleared. 0: Over current status is reported collectively for all downstream ports. 1: Over current status is reported on a per-port basis.
10	DT	**Device Type (Read Only).** This bit specifies that the Root Hub is not a compound device. The Root Hub is not permitted to be a compound device.

Downloaded from Arrow.com.

USB_HcRhDescriptorA Bit Descriptions (Continued)

Bit	Name	Description
9	NPS	**No Power Switching.** These bits are used to specify whether power switching is supported or ports are always powered. When this bit is cleared, Power Switching Mode (bit 8) specifies global or per-port switching. 0: Ports are power switched. 1: Ports are always powered on when the HC is powered on.
8	PSM	**Power Switching Mode.** This bit is used to specify how the power switching of the Root Hub ports is controlled.This field is only valid if No Power Switching (bit 9) is cleared. 0: All ports are powered at the same time. 1: Each port is powered individually.This mode allows port power to be controlled by either the global switch or per-port switching. If Port Power Control Mask (OHC Memory Offset 4Ch[20:17]) is set, the port responds only to port power commands (Set/ClearPortPower). If the port mask is cleared, then the port is controlled only by the global power switch (Set/ClearGlobalPower).
7:0	NDP (RO)	**Number Downstream Ports (Read Only).** These bits specify the number of downstream ports supported by the Root Hub.

6.4.3.20 Host Controller Root Hub Descriptor B (USB_HcRhDescriptorB)

OHC Memory Offset 4Ch
Type R/W
Reset Value 00000000h

This register is only reset by a power-on reset. It is written during system initialization to configure the Root Hub. These bits should not be written during normal operation.

USB_HcRhDescriptorB Register Map

31	30	29	28	27	26	25	24	23	22	21	20	19	18	17	16	15	14	13	12	11	10	9	8	7	6	5	4	3	2	1	0
RSVD											PPCM				RSVD												DR				RSVD

USB_HcRhDescriptorB Bit Descriptions

Bit	Name	Description
31:21	RSVD	**Reserved.** Read as 0.
20:17	PPCM	**Port Power Control Mask.** Each bit indicates if a port is affected by a global power control command when Power Switching Mode is set (OHC Memory Offset 48h[8] = 1). When set, the port's power state is only affected by per-port power control (Set/ClearPortPower). When cleared, the port is controlled by the global power switch (Set/ClearGlobalPower). If the device is configured to global switching mode (PowerSwitchingMode = 0), this field is not valid. Bit 17: Ganged-power mask on Port #1 Bit 18: Ganged-power mask on Port #2 Bit 19: Ganged-power mask on Port #3 Bit 20: Ganged-power mask on Port #4
16:5	RSVD	**Reserved.** Read as 0.

Downloaded from Arrow.com.

USB_HcRhDescriptorB Bit Descriptions (Continued)

Bit	Name	Description
4:1	DR	**Device Removeable.** Each bit is dedicated to a port of the Root Hub. When cleared, the attached device is removable. When set, the attached device is not removable. Bit 1: Device attached to Port #1 Bit 2: Device attached to Port #2 Bit 3: Device attached to Port #3 Bit 4: Device attached to Port #4
0	RSVD	**Reserved.** Read as 0.

6.4.3.21 Host Controller Root Hub Status (USB_HcRhStatus)

OHC Memory Offset 50h
Type R/W
Reset Value 00000000h

This register is reset by the UsbReset state.

Note: Read back are 0s.

USB_HcRhStatus Register Map

31	30	29	28	27	26	25	24	23	22	21	20	19	18	17	16	15	14	13	12	11	10	9	8	7	6	5	4	3	2	1	0
CRWE	RSVD													CCIC	LPSC	DRWE	RSVD													OCI	LPS

USB_HcRhStatus Bit Descriptions

Bit	Name	Description
31	CRWE	**Clear Remote Wakeup Enable.** Writing a 1 to this bit clears Device Remote Wakeup Enable (bit 15). Writing 0 has no effect.
30:18	RSVD	**Reserved.** Read as 0.
17	CCIC	**Over Current Indicator Change.** This bit is set by hardware when a change has occurred to the OCI field (bit 1). The HCD clears this bit by writing a 1. Writing 0 has no effect.
16	LPSC	**Read: Local Power Status Change.** The Root Hub does not support the local power status feature; thus, this bit is always read as 0. **Write: Set Global Power.** In global power mode (Power Switching Mode = 0) (OHC Memory Offset 48h[8] = 0), this bit is written to 1 to turn on power to all ports (clear PortPowerStatus). In per-port power mode, it sets Port Power Status (OHC Memory Offset 58h[8]) only on ports whose PortPowerControlMask bit (OHC Memory Offset 4Ch[20:17]) is not set. Writing 0 has no effect.
15	DRWE	**Read: Device Remote Wakeup Enable.** This bit enables a Connect Status Change bit (OHC Memory Offset 54h[16]) as a resume event, causing a UsbSuspend to UsbResume state transition and setting the Resume Detected interrupt. 0: ConnectStatusChange is not a remote wakeup event. 1: ConnectStatusChange is a remote wakeup event. **Write: Set Remote Wakeup Enable.** Writing a 1 sets Device Remote Wakeup Enable. Writing 0 has no effect.
14:2	RSVD	**Reserved.** Read as 0.
1	OCI	**Over Current Indicator.** This bit reports over current conditions when the global reporting is implemented. When set, an over current condition exists. When cleared, all power operations are normal. If per-port over current protection is implemented this bit is always 0.

Downloaded from Arrow.com.

USB_HcRhStatus Bit Descriptions (Continued)

Bit	Name	Description
0	LPS	**Read: Local Power Status.** The Root Hub does not support the local power status feature; thus, this bit is always read as 0. **Write: Clear Global Power.** In global power mode (Power Switching Mode = 0) (OHC Memory Offset 48h[8] = 0), this bit is written to 1 to turn off power to all ports (clear Port Power Status (Memory Offset 54h[8])). In per-port power mode, it clears Port Power Status only on ports whose Port Power Control Mask (Memory Offset 4Ch[20:17] bit is not set. Writing 0 has no effect.

6.4.3.22 Host Controller Root Hub Port Status 1 (USB_HcRhPortStatus[1])

OHC Memory Offset 54h
Type R/W
Reset Value 00000000h

USB_HcRhPortStatus[1] Register Map

31	30	29	28	27	26	25	24	23	22	21	20	19	18	17	16	15	14	13	12	11	10	9	8	7	6	5	4	3	2	1	0
RSVD											PRSC	OCIC	PSSC	PESC	CSC	RSVD						LSDA	PPS	RSVD			PRS	POCI	PSS	PES	CCS

USB_HcRhPortStatus[1] Bit Descriptions

Bit	Name	Description
31:21	RSVD	**Reserved.** Read as 0.
20	PRSC	**Port Reset Status Change.** This bit is set at the end of the 10 ms port reset signal. The HCD writes a 1 to clear this bit. Writing 0 has no effect. 0: Port reset is not complete. 1: Port reset is complete.
19	OCIC	**Port Over Current Indicator Change.** This bit is valid only if over current conditions are reported on a per-port basis. This bit is set when Root Hub changes the Port Over Current Indicator bit (bit 3). The HCD writes a 1 to clear this bit. Writing 0 has no effect. 0: No change in Port Over Current Indicator. 1: Port Over Current Indicator has changed.
18	PSSC	**Port Suspend Status Change.** This bit is set when the full resume sequence has been completed. This sequence includes the 20 ms resume pulse, LS EOP, and 3 ms resychronization delay. The HCD writes a 1 to clear this bit. Writing 0 has no effect. This bit is also cleared when Port Reset Status Change (bit 20) is set. 0: Port is not resumed. 1: Port resume is complete.
17	PESC	**Port Enable Status Change.** This bit is set when hardware events cause the Port Enable Status bit (bit 1) to be cleared. Changes from the HCD writes do not set this bit. The HCD writes a 1 to clear this bit. Writing 0 has no effect. 0: No change in Port Enable Status. 1: Change in Port Enable Status.

Downloaded from Arrow.com.

USB_HcRhPortStatus[1] Bit Descriptions (Continued)

Bit	Name	Description
16	CSC	**Connect Status Change.** This bit is set whenever a connect or disconnect event occurs. The HCD writes a 1 to clear this bit. Writing 0 has no effect. If Current Connect Status (bit 0) is cleared when a Set Port Reset, Set Port Enable, or Set Port Suspend (bits [4, 1, 2]) write occurs, this bit is set to force the driver to re-evaluate the connection status since these writes should not occur if the port is disconnected. 0: No change in Current Connect Status. 1: Change in Current Connect Status.
15:10	RSVD	**Reserved.** Read as 0.
9	LSDA	**Read: Low Speed Device Attached.** This bit indicates the speed of the device attached to this port. When set, a low speed device is attached to this port. When clear, a full speed device is attached to this port. This field is valid only when the Current Connect Status (bit 0) is set. 0: Full speed device attached. 1: Low speed device attached. **Write: Clear Port Power.** The HCD clears the Port Power Status bit (bit 8) by writing a 1 to this bit. Writing 0 has no effect.
8	PPS	**Read: Port Power Status.** This bit reflects the ports power status, regardless of the type of power switching implemented. This bit is cleared if an over current condition is detected. The HCD sets this bit by writing Set Port Power (bit 8) or Set Global Power (OHC Memory Offset 50h[16]). The HCD clears this bit by writing Clear Port Power (bit 9) or ClearGlobalPower (OHC Memory Offset 50h[0]). Which power control switches are enabled is determined by Power Switching Mode and Port Control Mask (OHC Memory Offset 48h[8] and OHC Memory Offset [20:17]). In global switching mode (Power Switching Mode = 0), only Set/ClearGlobalPower controls this bit. In per-port power switching (Power Switching Mode = 1), if the Port Power Control Mask bit for the port is set, only Set/ClearPortPower commands are enabled. If the mask is not set, only Set/ClearGlobalPower commands are enabled. When port power is disabled, Current Connect Status, Port Enable Status, Port Suspend Status, and Port Reset Status (bits [0,1,2,4]) should be reset. 0: Port power is off. 1: Port power is on. **Write: Set Port Power.** The HCD writes a 1 to set the Port Power Status bit. Writing 0 has no effect.
7:5	RSVD	**Reserved.** Read as 0.
4	PRS	**Read: Port Reset Status.** When this bit is set by a write to Set Port Reset (bit 4), port reset signaling is asserted. When reset is completed, this bit is cleared when Port Reset Status Change (bit 20) is set. This bit cannot be set if Current Connect Status (bit 0) is cleared. 0: Port reset signal is not active. 1: Port reset signal is active. **Write: Set Port Reset.** The HCD sets the port reset signaling by writing a 1 to this bit. Writing 0 has no effect. If Current Connect Status (bit 0) is cleared, this write does not set Port Reset Status (bit 4), but instead sets Connect Status Change (bit 16). This informs the driver that it attempted to reset a disconnected port.

Downloaded from Arrow.com.

USB_HcRhPortStatus[1] Bit Descriptions (Continued)

Bit	Name	Description
3	POCI	**Read: Port Over Current Indicator.** This bit is only valid when the Root Hub is configured in such a way that over current conditions are reported on a per-port basis. If per-port over current reporting is not supported, this bit is set to 0. If cleared, all power operations are normal for this port. If set, an over current condition exists on this port. This bit always reflects the over current input signal. 0: No over current condition. 1: Over current condition detected. **Write: Clear Port Suspend.** The HCD writes a 1 to initiate a resume. Writing 0 has no effect. A resume is initiated only if Port Suspend Status (bit 2) is set.
2	PSS	**Read: Port Suspend Status.** This bit indicates that the port is suspended or in the resume sequence. It is set by a Set Port Suspend (bit 3) write and cleared when Port Suspend Status Change (bit 18) is set at the end of the resume interval. This bit cannot be set if Current Connect Status (bit 0) is cleared. This bit is also cleared when Port Reset Status Change (bit 20) is set at the end of the port reset or when the HC is placed in the UsbResume state. If an upstream resume is in progress, it should propagate to the HC. 0: Port is not suspended. 1: Port is suspended. **Write: Set Port Suspend.** The HCD sets Port Suspend Status (bit 2) by writing a 1 to this bit. Writing 0 has no effect. If Current Connect Status (bit 0) is cleared, this write does not set Port Suspend Status; instead it sets Connect Status Change (bit 16). This informs the driver that it attempted to suspend a disconnected port.
1	PES	**Read: Port Enable Status.** This bit indicates whether the port is enabled or disabled. The Root Hub may clear this bit when an over current condition, disconnect event, switched-off power, or operational bus error such as babble is detected. This change also causes Port Enabled Status Change (bit 17) to be set. HCD sets this bit by writing Set Port Enable (bit 1) and clears it by writing Clear Port Enable (bit 0). This bit cannot be set when Current Connect Status (bit 0) is cleared. This bit is also set, if not already, at the completion of a port reset when Port Reset Status Change (bit 20) is set or port suspend when Port Suspend Status Change (bit 18) is set. 0: Port is disabled. 1: Port is enabled. **Write: Set PortEnable.** The HCD sets Port Enable Status (bit 1) by writing a 1. Writing 0 has no effect. If Current Connect Status (bit 0) is cleared, this write does not set Port Enable Status (bit 1), but instead sets Connect Status Change (bit 16). This informs the driver that it attempted to enable a disconnected port.
0	CCS	**Read: Current Connect Status.** This bit reflects the current state of the downstream port. 0: No device connected. 1: Device connected. **Write: Clear Port Enable.** The HCD writes a 1 to this bit to clear Port Enable Status (bit 1). Writing 0 has no effect. The Current Connect Status (bit 0) is not affected by any write.

Downloaded from Arrow.com.

6.4.3.23 Host Controller Root Hub Port Status 2 (USB_HcRhPortStatus[2])

OHC Memory Offset 58h
Type R/W
Reset Value 00000000h

USB_HcRhPortStatus[2] Register Map

31	30	29	28	27	26	25	24	23	22	21	20	19	18	17	16	15	14	13	12	11	10	9	8	7	6	5	4	3	2	1	0
RSVD											PRSC	OCIC	PSSC	PESC	CSC	RSVD						LSDA	PPS	RSVD			PRS	POCI	PSS	PES	CCS

USB_HcRhPortStatus[2] Bit Descriptions

Bit	Name	Description
31:21	RSVD	**Reserved.** Read as 0.
20	PRSC	**Port Reset Status Change.** This bit is set at the end of the 10 ms port reset signal. The HCD writes a 1 to clear this bit. Writing 0 has no effect. 0: Port reset is not complete. 1: Port reset is complete.
19	OCIC	**Port Over Current Indicator Change.** This bit is valid only if over current conditions are reported on a per-port basis. This bit is set when Root Hub changes the Port Over Current Indicator bit (bit 3). The HCD writes a 1 to clear this bit. Writing 0 has no effect. 0: No change in Port Over Current Indicator. 1: Port Over Current Indicator has changed.
18	PSSC	**Port Suspend Status Change.** This bit is set when the full resume sequence has been completed. This sequence includes the 20 ms resume pulse, LS EOP, and 3 ms resychronization delay. The HCD writes a 1 to clear this bit. Writing 0 has no effect. This bit is also cleared when Port Reset Status Change (bit 20) is set. 0: Port is not resumed. 1: Port resume is complete.
17	PESC	**Port Enable Status Change.** This bit is set when hardware events cause Port Enable Status (bit 1) to be cleared. Changes from the HCD writes do not set this bit. The HCD writes a 1 to clear this bit. Writing 0 has no effect. 0: No change in Port Enable Status. 1: Change in Port Enable Status.
16	CSC	**Connect Status Change.** This bit is set whenever a connect or disconnect event occurs. The HCD writes a 1 to clear this bit. Writing 0 has no effect. If Current Connect Status (bit 0) is cleared when a Set Port Enable, Set Port Suspend, or Set Port Reset (bits [1,2,4]) write occurs, this bit is set to force the driver to re-evaluate the connection status since these writes should not occur if the port is disconnected. 0: No change in Current Connect Status. 1: Change in Current Connect Status.
15:10	RSVD	**Reserved.** Read as 0.
9	LSDA	**Read: Low Speed Device Attached.** This bit indicates the speed of the device attached to this port. When set, a low speed device is attached to this port. When clear, a full speed device is attached to this port. This field is valid only when Current Connect Status (bit 0) is set. 0: Full speed device attached. 1: Low speed device attached. **Write: Clear Port Power.** The HCD clears the Port Power Status bit (bit 8) by writing a 1 to this bit. Writing 0 has no effect.

Downloaded from Arrow.com.

USB_HcRhPortStatus[2] Bit Descriptions (Continued)

Bit	Name	Description
8	PPS	**Read: Port Power Status.** This bit reflects the ports power status, regardless of the type of power switching implemented. This bit is cleared if an over current condition is detected. HCD sets this bit by writing Set Port Power (bit 8) or Set Global Power (OHC Memory Offset 50h[16]). HCD clears this bit by writing Clear Port Power (bit 9) or Clear Global Power (OHC Memory Offset 50h[0]). Which power control switches are enabled is determined by Power Switching Mode (OHC Memory Offset 48h[8]) and Port Power Control Mask (OHC Memory Offset 4Ch[20:17]). In global switching mode (Power Switching Mode = 0), only Set/ClearGlobalPower controls this bit. In per-port power switching (Power Switching Mode = 1), if the Port Power Control Mask bit for the port is set, only Set/ClearPortPower commands are enabled. If the mask is not set, only Set/ClearGlobalPower commands are enabled. When port power is disabled, Current Connect Status, Port Enable Status, Port Suspend Status, and Port Reset Status (bits [0,1,2,4]) should be reset. 0: Port power is off. 1: Port power is on. **Write: Set Port Power.** The HCD writes a 1 to set Port Power Status (bit 8). Writing 0 has no effect.
7:5	RSVD	**Reserved.** Read as 0.
4	PRS	**Read: Port Reset Status.** When this bit is set by a write to Set Port Reset (bit 4), port reset signaling is asserted. When reset is completed, this bit is cleared when Port Reset Status Change (bit 20) is set. This bit cannot be set if Current Connect Status (bit 0) is cleared. 0: Port reset signal is not active. 1: Port reset signal is active. **Write: Set Port Reset.** The HCD sets the port reset signaling by writing a 1 to this bit. Writing 0 has no effect. If Current Connect Status (bit 0) is cleared, this write does not set Port Reset Status (bit 4), but instead sets Connect Status Change (bit 16). This informs the driver that it attempted to reset a disconnected port.
3	POCI	**Read: Port Over Current Indicator.** This bit is only valid when the Root Hub is configured in such a way that over current conditions are reported on a per-port basis. If per-port over current reporting is not supported, this bit is set to 0. If cleared, all power operations are normal for this port. If set, an over current condition exists on this port. This bit always reflects the over current input signal. 0: No over current condition. 1: Over current condition detected. **Write: Clear Port Suspend.** The HCD writes a 1 to initiate a resume. Writing 0 has no effect. A resume is initiated only if Port Suspend Status (bit 2) is set.
2	PSS	**Read: Port Suspend Status.** This bit indicates the port is suspended or in the resume sequence. It is set by a Set Port Suspend (bit 2) write and cleared when Port Suspend Status Change (bit 18) is set at the end of the resume interval. This bit cannot be set if Current Connect Status (bit 0) is cleared. This bit is also cleared when Port Reset Status Change (bit 20) is set at the end of the port reset or when the HC is placed in the UsbResume state. If an upstream resume is in progress, it should propagate to the HC. 0: Port is not suspended. 1: Port is suspended. **Write: Set Port Suspend.** The HCD sets the Port Suspend Status (bit 2) bit by writing a 1 to this bit. Writing 0 has no effect. If Current Connect Status (bit 0) is cleared, this write does not set Port Suspend Status (bit 2); instead it sets Connect Status Change (bit 16). This informs the driver that it attempted to suspend a disconnected port.

Downloaded from Arrow.com.

USB_HcRhPortStatus[2] Bit Descriptions (Continued)

Bit	Name	Description
1	PES	**Read: Port Enable Status.** This bit indicates whether the port is enabled or disabled. The Root Hub may clear this bit when an over current condition, disconnect event, switched-off power, or operational bus error such as babble is detected. This change also causes Port Enable Status Change (bit 17) to be set. The HCD sets this bit by writing Set Port Enable (bit 1) and clears it by writing Clear Port Enable (bit 0). This bit cannot be set when Current Connect Status (bit 0) is cleared. This bit is also set, if not already, at the completion of a port reset when Port Reset Status Change (bit 20) is set or port suspend when Port Suspend Status Change (bit 18) is set. 0: Port is disabled. 1: Port is enabled. **Write: Set PortEnable.** The HCD sets PortEnableStatus by writing a 1. Writing 0 has no effect. If Current Connect Status is cleared, this write does not set Port Enable Status, but instead sets Connect Status Change. This informs the driver that it attempted to enable a disconnected port.
0	CCS	**Read: Current Connect Status.** This bit reflects the current state of the downstream port. 0: No device connected. 1: Device connected. **Write: Clear Port Enable.** The HCD writes a 1 to this bit to clear Port Enable Status (bit 1). Writing 0 has no effect. The Current Connect Status (bit 0) is not affected by any write.

6.4.3.24 Host Controller Root Hub Port Status 3 (USB_HcRhPortStatus[3])

OHC Memory Offset 5Ch
Type R/W
Reset Value 00000000h

USB_HcRhPortStatus[3] Register Map

31	30	29	28	27	26	25	24	23	22	21	20	19	18	17	16	15	14	13	12	11	10	9	8	7	6	5	4	3	2	1	0
RSVD											PRSC	OCIC	PSSC	PESC	CSC	RSVD						LSDA	PPS	RSVD			PRS	POCI	PSS	PES	CCS

USB_HcRhPortStatus[3] Bit Descriptions

Bit	Name	Description
31:21	RSVD	**Reserved.** Read as 0.
20	PRSC	**Port Reset Status Change.** This bit is set at the end of the 10 ms port reset signal. The HCD writes a 1 to clear this bit. Writing 0 has no effect. 0: Port reset is not complete. 1: Port reset is complete.
19	OCIC	**Port Over Current Indicator Change.** This bit is valid only if over current conditions are reported on a per-port basis. This bit is set when Root Hub changes Port Over Current Indicator (bit 3). The HCD writes a 1 to clear this bit. Writing 0 has no effect. 0: No change in Port Over Current Indicator. 1: Port Over Current Indicator has changed.

Downloaded from Arrow.com.

USB_HcRhPortStatus[3] Bit Descriptions (Continued)

Bit	Name	Description
18	PSSC	**Port Suspend Status Change.** This bit is set when the full resume sequence has been completed. This sequence includes the 20 ms resume pulse, LS EOP, and 3 ms resychronization delay. The HCD writes a 1 to clear this bit. Writing 0 has no effect. This bit is also cleared when Port Reset Status Change (bit 20) is set. 0: Port is not resumed. 1: Port resume is complete.
17	PESC	**Port Enable Status Change.** This bit is set when hardware events cause Port Enable Status (bit 1) to be cleared. Changes from HCD writes do not set this bit. The HCD writes a 1 to clear this bit. Writing 0 has no effect. 0: No change in Port Enable Status. 1: Change in Port Enable Status.
16	CSC	**Connect Status Change.** This bit is set whenever a connect or disconnect event occurs. The HCD writes a 1 to clear this bit. Writing 0 has no effect. If Current Connect Status (bit 0) is cleared when a Set Port Enable, Set Port Suspend, or Set Port Reset (bits [1,2,4]) write occurs, this bit is set to force the driver to re-evaluate the connection status since these writes should not occur if the port is disconnected. 0: No change in Current Connect Status. 1: Change in Current Connect Status.
15:10	RSVD	**Reserved.** Read as 0.
9	LSDA	**Read: Low Speed Device Attached.** This bit indicates the speed of the device attached to this port. When set, a low speed device is attached to this port. When clear, a full speed device is attached to this port. This field is valid only when Current Connect Status (bit 0) is set. 0: Full speed device attached. 1: Low speed device attached. **Write: Clear Port Power.** The HCD clears Port Power Status (bit 8) by writing a 1 to this bit. Writing 0 has no effect.
8	PPS	**Read: Port Power Status.** This bit reflects the ports power status, regardless of the type of power switching implemented. This bit is cleared if an over current condition is detected. HCD sets this bit by writing Set Port Power (bit 8) or Set Global Power (OHC Memory Offset 50h[16]). The HCD clears this bit by writing Clear Port Power (bit 9) or Clear Global Power OHC Memory Offset 50h[0]). Which power control switches are enabled is determined by Power Switching Mode (OHC Memory Offset 48h[8]) and Port Power Control Mask (OHC Memory Offset 4Ch[20:17]). In global switching mode (Power Switching Mode = 0), only Set/ClearGlobalPower controls this bit. In per-port power switching (Power Switching Mode = 1), if the Port Power Control Mask bit for the port is set, only Set/ClearPortPower commands are enabled. If the mask is not set, only Set/ClearGlobalPower commands are enabled. When port power is disabled, Current Connect Status, Port Enable Status, Port Suspend Status, and Port Reset Status (bits [0,1,2,4]) should be reset. 0: Port power is off. 1: Port power is on. **Write: Set Port Power.** The HCD writes a 1 to set Port Power Status (bit 8). Writing 0 has no effect.
7:5	RSVD	**Reserved.** Read as 0.

Downloaded from Arrow.com.

USB_HcRhPortStatus[3] Bit Descriptions (Continued)

Bit	Name	Description
4	PRS	**Read: Port Reset Status.** When this bit is set by a write to Set Port Reset (bit 4) port reset signaling is asserted. When reset is completed, this bit is cleared when Port Reset Status Change (bit 20) is set. This bit cannot be set if Current Connect Status (bit 0) is cleared. 0: Port reset signal is not active. 1: Port reset signal is active. **Write: Set Port Reset.** The HCD sets the port reset signaling by writing a 1 to this bit. Writing 0 has no effect. If Current Connect Status (bit 0) is cleared, this write does not set Port Reset Status (bit 4), but instead sets Connect Status Change (bit 16). This informs the driver that it attempted to reset a disconnected port.
3	POCI	**Read: Port Over Current Indicator.** This bit is only valid when the Root Hub is configured in such a way that over current conditions are reported on a per-port basis. If per-port over current reporting is not supported, this bit is set to 0. If cleared, all power operations are normal for this port. If set, an over current condition exists on this port. This bit always reflects the over current input signal. 0: No over current condition. 1: Over current condition detected. **Write: Clear Port Suspend.** The HCD writes a 1 to initiate a resume. Writing 0 has no effect. A resume is initiated only if Port Suspend Status (bit 2) is set.
2	PSS	**Read: Port Suspend Status.** This bit indicates the port is suspended or in the resume sequence. It is set by a Set Port Suspend (bit 2) write and cleared when Port Suspend Status Change (bit 18) is set at the end of the resume interval. This bit cannot be set if Current Connect Status (bit 0) is cleared. This bit is also cleared when Port Reset Status Change (bit 20) is set at the end of the port reset or when the HC is placed in the UsbResume state. If an upstream resume is in progress, it should propagate to the HC. 0: Port is not suspended. 1: Port is suspended. **Write: Set Port Suspend.** The HCD sets Port Suspend Status (bit 2) by writing a 1 to this bit. Writing 0 has no effect. If Current Connect Status (bit 0) is cleared, this write does not set Port Suspend Status; instead it sets ConnectStatusChange. This informs the driver that it attempted to suspend a disconnected port.
1	PES	**Read: Port Enable Status.** This bit indicates whether the port is enabled or disabled. The Root Hub may clear this bit when an over current condition, disconnect event, switched-off power, or operational bus error such as babble is detected. This change also causes Port Enable Status Change (bit 17) to be set. HCD sets this bit by writing Set Port Enable (bit 1) and clears it by writing Clear Port Enable (bit 0). This bit cannot be set when Current Connect Status (bit 0) is cleared. This bit is also set, if not already, at the completion of a port reset when Port Reset Status Change (bit 20) is set or port suspend when Port Suspend Status Change (bit 18) is set. 0: Port is disabled. 1: Port is enabled. **Write: Set PortEnable.** The HCD sets Port Enable Status (bit 1) by writing a 1. Writing 0 has no effect. If Current Connect Status (bit 0) is cleared, this write does not set Port Enable Status, but instead sets Connect Status Change. This informs the driver that it attempted to enable a disconnected port.
0	CCS	**Read: Current Connect Status.** This bit reflects the current state of the downstream port. 0: No device connected. 1: Device connected. **Write: Clear Port Enable.** The HCD writes a 1 to this bit to clear Port Enable Status (bit 1). Writing 0 has no effect. The Current Connect Status (bit 0) is not affected by any write.

Downloaded from Arrow.com.

6.4.3.25 Host Controller Root Hub Port Status 4 (USB_HcRhPortStatus[4])

OHC Memory Offset 60h
Type R/W
Reset Value 00000000h

USB_HcRhPortStatus[4] Register Map

31	30	29	28	27	26	25	24	23	22	21	20	19	18	17	16	15	14	13	12	11	10	9	8	7	6	5	4	3	2	1	0
RSVD											PRSC	OCIC	PSSC	PESC	CSC	RSVD						LSDA	PPS	RSVD			PRS	POCI	PSS	PES	CCS

USB_HcRhPortStatus[4] Bit Descriptions

Bit	Name	Description
31:21	RSVD	**Reserved.** Read as 0.
20	PRSC	**Port Reset Status Change.** This bit is set at the end of the 10 ms port reset signal. The HCD writes a 1 to clear this bit. Writing 0 has no effect. 0: Port reset is not complete. 1: Port reset is complete.
19	OCIC	**Port Over Current Indicator Change.** This bit is valid only if over current conditions are reported on a per-port basis. This bit is set when Root Hub changes Port OverCurrent Indicator (bit 3). The HCD writes a 1 to clear this bit. Writing 0 has no effect. 0: No change in Port Over Current Indicator. 1: Port Over Current Indicator has changed.
18	PSSC	**Port Suspend Status Change.** This bit is set when the full resume sequence has been completed. This sequence includes the 20 ms resume pulse, LS EOP, and 3 ms resychronization delay. The HCD writes a 1 to clear this bit. Writing 0 has no effect. This bit is also cleared when Port Reset Status Change (bit 20) is set. 0: Port is not resumed. 1: Port resume is complete.
17	PESC	**Port Enable Status Change.** This bit is set when hardware events cause Port Enable Status (bit 1) to be cleared. Changes from HCD writes do not set this bit. The HCD writes a 1 to clear this bit. Writing 0 has no effect. 0: No change in Port Enable Status. 1: Change in Port Enable Status.
16	CSC	**Connect Status Change.** This bit is set whenever a connect or disconnect event occurs. The HCD writes a 1 to clear this bit. Writing 0 has no effect. If Current Connect Status (bit 0) is cleared when a Set Port Enable, Set Port Suspend, or Set Port Reset (bits [1,2,4]) write occurs, this bit is set to force the driver to re-evaluate the connection status since these writes should not occur if the port is disconnected. 0: No change in Current Connect Status. 1: Change in Current Connect Status.
15:10	RSVD	**Reserved.** Read as 0.
9	LSDA	**Read: Low Speed Device Attached.** This bit indicates the speed of the device attached to this port. When set, a low speed device is attached to this port. When clear, a full speed device is attached to this port. This field is valid only when Current Connect Status (bit 0) is set. 0: Full speed device attached. 1: Low speed device attached. **Write: Clear Port Power.** The HCD clears Port Power Status (bit 8) by writing a 1 to this bit. Writing 0 has no effect.

Downloaded from Arrow.com.

USB_HcRhPortStatus[4] Bit Descriptions (Continued)

Bit	Name	Description
8	PPS	**Port Power Status.** This bit reflects the ports power status, regardless of the type of power switching implemented. This bit is cleared if an over current condition is detected. HCD sets this bit by writing Set Port Power (bit 8) or Set Global Power (OHC Memory Offset 50h[16]). The HCD clears this bit by writing Clear Port Power (bit 9) or Clear Global Power OHC Memory Offset 50h[0]). Which power control switches are enabled is determined by Power Switching Mode (OHC Memory Offset 48h[8]) and Port Power Control Mask (OHC Memory Offset 4Ch[20:17]). In global switching mode (Power Switching Mode = 0), only Set/ClearGlobalPower controls this bit. In per-port power switching (Power Switching Mode = 1), if the Port Power Control Mask bit for the port is set, only Set/ClearPortPower commands are enabled. If the mask is not set, only Set/ClearGlobalPower commands are enabled. When port power is disabled, Current Connect Status, Port Enable Status, Port Suspend Status, and Port Reset Status (bits [0,1,2,4]) should be reset. 0: Port power is off. 1: Port power is on. **Write: Set Port Power.** The HCD writes a 1 to set Port Power Status (bit 8). Writing 0 has no effect.
7:5	RSVD	**Reserved.** Read as 0.
4	PRS	**Read: Port Reset Status.** When this bit is set by a write to Set Port Reset (bit 4), port reset signaling is asserted. When reset is completed, this bit is cleared when Port Reset Status Change (bit 20) is set. This bit cannot be set if Current Connect Status (bit 0) is cleared. 0: Port reset signal is not active. 1: Port reset signal is active. **Write: Set Port Reset.** The HCD sets the port reset signaling by writing a 1 to this bit. Writing 0 has no effect. If Current Connect Status is cleared (bit 0), this write does not set Port Reset Status (bit 4), but instead sets Connect Status Change (bit 16). This informs the driver that it attempted to reset a disconnected port.
3	POCI	**Read: Port Over Current Indicator.** This bit is only valid when the Root Hub is configured in such a way that over current conditions are reported on a per-port basis. If per-port over current reporting is not supported, this bit is set to 0. If cleared, all power operations are normal for this port. If set, an over current condition exists on this port. This bit always reflects the over current input signal. 0: No over current condition. 1: Over current condition detected. **Write: Clear Port Suspend.** The HCD writes a 1 to initiate a resume. Writing 0 has no effect. A resume is initiated only if Port Suspend Status (bit 2) is set.
2	PSS	**Read: Port Suspend Status.** This bit indicates the port is suspended or in the resume sequence. It is set by a Set Port Suspend (bit 2) write and cleared when Port Suspend Status Change (bit 18) is set at the end of the resume interval. This bit cannot be set if Current Connect Status (bit 0) is cleared. This bit is also cleared when Port Reset Status Change (bit 20) is set at the end of the port reset or when the HC is placed in the UsbResume state. If an upstream resume is in progress, it should propagate to the HC. 0: Port is not suspended. 1: Port is suspended. **Write: Set Port Suspend.** The HCD sets Port Suspend Status (bit 18) by writing a 1 to this bit. Writing 0 has no effect. If Current Connect Status (bit 0) is cleared, this write does not set Port Suspend Status; instead it sets Connect Status Change (bit 16). This informs the driver that it attempted to suspend a disconnected port.

Downloaded from Arrow.com.

USB_HcRhPortStatus[4] Bit Descriptions (Continued)

Bit	Name	Description
1	PES	**Read: Port Enable Status.** This bit indicates whether the port is enabled or disabled. The Root Hub may clear this bit when an over current condition, disconnect event, switched-off power, or operational bus error such as babble is detected. This change also causes Port Enable Status Change (bit 17) to be set. HCD sets this bit by writing Set Port Enable (bit 1) and clears it by writing Clear Port Enable (bit 0). This bit cannot be set when Current Connect Status (bit 0) is cleared. This bit is also set, if not already, at the completion of a port reset when Port Reset Status Change (bit 20) is set or port suspend when Port Suspend Status Change (bit 18) is set. 0: Port is disabled. 1: Port is enabled. **Write: Set PortEnable.** The HCD sets Port Enable Status (bit 1) by writing a 1. Writing 0 has no effect. If Current Connect Status (bit 0) is cleared, this write does not set Port Enable Status, but instead sets Connect Status Change (bit 16). This informs the driver that it attempted to enable a disconnected port.
0	CCS	**Read: Current Connect Status.** This bit reflects the current state of the downstream port. 0: No device connected. 1: Device connected. **Write: Clear Port Enable.** The HCD writes a 1 to this bit to clear Port Enable Status (bit 1). Writing 0 has no effect. The Current Connect Status (bit 0) is not affected by any write.

Downloaded from Arrow.com.

6.4.4 USB Enhanced Host Controller Native Registers

Software must write to all EHC operational registers in full DWORD width. Smaller write accesses can result in corrupted register contents. Reads may be of arbitrary size without any negative effect.

6.4.4.1 Host Controller Capability Register (USB_HCCAPBASE)

EHC Memory Offset 00h
Type: RO
Reset Value 01000010h

USB_HCCAPBASE Register Map

31	30	29	28	27	26	25	24	23	22	21	20	19	18	17	16	15	14	13	12	11	10	9	8	7	6	5	4	3	2	1	0
HCIVERSION																RSVD								CAPLENGTH							

USB_HCCAPBASE Bit Descriptions

Bit	Name	Description
31:16	HCIVERSION	**Host Controller Interface Version Number.** This is a two-byte register containing a BCD encoding of the version number of the interface to which this HC interface conforms.
15:8	RSVD	**Reserved.** Read as 0.
7:0	CAPLENGTH	**Capability Registers Length.** Offset to add to USBBASE to find operational registers.

6.4.4.2 Structural Parameters Register (USB_HCSPARAMS)

EHC Memory Offset 04h
Type: RO
Reset Value 00001414h

USB_HCSPARAMS Register Map

31	30	29	28	27	26	25	24	23	22	21	20	19	18	17	16	15	14	13	12	11	10	9	8	7	6	5	4	3	2	1	0
RSVD								DPN				RSVD			P_INDICATOR	N_CC				N_PCC				PRR	RSVD			PPC	N_PORTS			

USB_HCSPARAMS Bit Descriptions

Bit	Name	Description
31:24	RSVD	**Reserved.** Read as 0.
23:20	DPN	**Debug Port Number.** Optional. This EHC does not implement a debug port.
19:17	RSVD	**Reserved.** Read as 0.
16	P_INDICATOR	**Port Indicators.** This bit indicates whether the ports support port indicator control. When this bit is a one, the Port Status and Control registers include a read/writable field for controlling the state of the port indicator.
15:12	N_CC	**Number of Companion Controller.** This field indicates the number of companion controllers associated with this USB 2.0 HC. Port ownership hand-offs are supported. High, full, and low speed devices are supported on the HC root ports.
11:8	N_PCC	**Number of Ports per Companion Controller.** This field indicates the number of ports supported per companion HC. It is used to indicate the port routing configuration to system software.

Downloaded from Arrow.com.

USB_HCSPARAMS Bit Descriptions

Bit	Name	Description
7	PRR	**Port Routing Rules.** This field indicates the method used by this implementation for mapping all ports to companion controllers. 0: The first N_PCC ports are routed to the lowest numbered function companion HC, the next N_PCC port are routed to the next lowest function companion controller, and so on. 1: The port routing is explicitly enumerated by the first N_PORTS elements of the HCSP-PORTROUTE array.
6:5	RSVD	**Reserved.** Read as 0.
4	PPC	**Port Power Control.** This field indicates whether the HC implementation includes port power control. A one in this bit indicates the ports have port power switches. A zero in this bit indicates the ports do not have port power switches. The value of this field affects the functionality of the Port Power field in each Port Status and Control register.
3:0	N_PORTS	**Number of Ports.** This field specifies the number of physical downstream ports implemented on this HC. The value of this field determines how many port registers are addressable in the Operational Register Space.

6.4.4.3 Capability Parameters Register (USB_HCCPARAMS)

EHC Memory Offset 08h
Type: RO
Reset Value 00000012h

USB_HCCPARAMS Register Map

31	30	29	28	27	26	25	24	23	22	21	20	19	18	17	16	15	14	13	12	11	10	9	8	7	6	5	4	3	2	1	0
RSVD																EECP								IST				RSVD	ASPC	PFLF	64AC

USB_HCCPARAMS Bit Descriptions

Bit	Name	Description
31:16	RSVD	**Reserved.** Read as 0.
15:8	EECP	**EHCI Extended Capabilities Pointer.** This optional field indicates the existence of a capabilities list. A non-zero value in this register indicates the offset in PCI configuration space of the first EHCI extended capability.
7:4	IST	**Isochronous Scheduling Threshold.** This field indicates, relative to the current position of the executing HC, where software can reliably update the isochronous schedule. When bit [7] is zero, the value of the least significant 3 bits indicates the number of micro-frames a HC can hold a set of isochronous data structures (one or more) before flushing the state. When bit [7] is a one, then host software assumes the HC may cache an isochronous data structure for an entire frame.
3	RSVD	**Reserved.** Read as 0.
2	ASPC	**Asynchronous Schedule Park Capability.** If this bit is set to a one, then the HC supports the park feature for high speed queue heads in the Asynchronous Schedule.
1	PFLF	**Programmable Frame List Flag.** If this bit is set to a zero, then system software must use a frame list length of 1024 elements with this HC. If set to a one, then system software can specify and use a smaller frame list and configure the HC via the USBCMD register Frame List Size field.

Downloaded from Arrow.com.

USB_HCCPARAMS Bit Descriptions (Continued)

Bit	Name	Description
0	64AC	**64-bit Addressing Capability.** This field documents the addressing range capability of this implementation. 0: Data structures using 32-bit address memory pointers. 1: Data structures using 64-bit address memory pointers.

6.4.4.4 Command Register (USBCMD)

EHC Memory Offset 10h
Type: R/W
Reset Value 00008000h

USBCMD Register Map

31	30	29	28	27	26	25	24	23	22	21	20	19	18	17	16	15	14	13	12	11	10	9	8	7	6	5	4	3	2	1	0
RSVD								ITC								RSVD				ASPME	RSVD	ASPMC		LHCR	IAAD	ASE	PSE	FLS		HCRESET	RS

USBCMD Bit Descriptions

Bit	Name	Description
31:24	RSVD	**Reserved.** Read as 0.
23:16	ITC	**EHCI Extended Capabilities Pointer.** This optional field indicates the existence of a capabilities list. A non-zero value in this register indicates the offset in PCI configuration space of the first EHCI extended capability.
15:12	RSVD	**Reserved.** Read as 0.
11	ASPME	**Asynchronous Schedule Park Mode Enable (Optional).** Not supported in this EHCI implementation.
10	RSVD	**Reserved.** Read as 0.
9:8	ASPMC	**Asynchronous Schedule Park Mode Count (Optional).** Not supported in this EHCI implementation.
7	LHCR	**Light Host Controller Reset (Optional).** This bit allows the driver to reset the EHCI controller without affecting the state of the ports or the relationship to the companion HCs. A host software read of this bit as 0 indicates the Light Host Controller Reset has completed and it is safe for host software to reinitialize the HC. A host software read of this bit as a 1 indicates the Light Host Controller Reset has not yet completed.
6	IAAD	**Interrupt on Async Advance Doorbell.** This bit is used as a doorbell by software to tell the HC to issue an interrupt the next time it advances the Asynchronous Schedule. Software must write a 1 to this bit to ring the doorbell.
5	ASE	**Asynchronous Schedule Enable.** This bit controls whether the HC skips processing the Asynchronous Schedule. 0: Do not process the Asynchronous Schedule. 1: Use the ASYNCLISTADDR register (EHC Memory Offset 28h) to access the Asynchronous Schedule.
4	PSE	**Periodic Schedule Enable.** This bit controls whether the HC skips processing the Periodic Schedule. 0: Do not process the Periodic Schedule. 1: Use the PERIODICLISTBASE register (EHC Memory Offset 24h) to access the Periodic Schedule.

Downloaded from Arrow.com.

USBCMD Bit Descriptions (Continued)

Bit	Name	Description
3:2	FLS	**Frame List Size.** This field specifies the size of the frame list. The size of the frame list controls which bits in the Frame Index Register (EHC Memory Offset 1Ch) should be used for the Frame List current index. 00: 1024 elements (4096 bytes) Default value. 01: 512 elements (2048 bytes). 10: 256 elements (1024 bytes) for resource-constrained environments. 11: Reserved.
1	HCRESET	**Host Controller Reset.** This control bit is used by software to reset the HC. The effects of this on Root Hub registers are similar to a Chip Hardware Reset. When software writes a 1 to this bit, the HC resets its internal pipelines, timers, counters, state machines, etc. to their initial value. Any transaction currently in progress on USB is immediately terminated. A USB reset is not driven on downstream ports.
0	RS	**Run/Stop. R/WC.** When set to 1, the HC proceeds with execution of the schedule. The HC continues execution as long as this bit is set to 1. When this bit is set to 0, the HC completes the current and any actively pipelined transactions on the USB and then halts. The HC must halt within 16 micro-frames after software clears the Run bit. The HCHalted bit (EHC Memory Offset 14h[12]) indicates when the HC has finished its pending pipelined transactions and has entered the stopped state. Software must not write a 1 to this field unless the HC is in the Halted state (i.e., EHC Memory Offset 14h[12] = 1). Doing so will yield undefined results.

6.4.4.5 Status Register (USBSTS)

EHC Memory Offset 14h
Type: R/W
Reset Value 00001000h

USBSTS Register Map

31	30	29	28	27	26	25	24	23	22	21	20	19	18	17	16	15	14	13	12	11	10	9	8	7	6	5	4	3	2	1	0
RSVD																ASS	PSS	REC	HCHALTED	RSVD						IAA	HSE	FLRO	PCD	USBERRINT	USBINT

USBSTS Bit Descriptions

Bit	Name	Description
31:16	RSVD	**Reserved.** Read as 0.
15	ASS	**Asynchronous Schedule Status.** This bit reports the current real status of the Asynchronous Schedule. If this bit is 0, then the status of the Asynchronous Schedule is disabled. If this bit is 1, then the status of the Asynchronous Schedule is enabled.
14	PSS	**Periodic Schedule Status.** This bit reports the current real status of the Periodic Schedule. If this bit is 0, then the status of the Periodic Schedule is disabled.
13	REC (RO)	**Reclamation (Read Only).** This is a read only status bit, which is used to detect an empty Asynchronous Schedule.
12	HCHALTED	**Host Controller Halted.** This bit is 0 whenever the Run/Stop bit (EHC Memory Offset 10h[0]) is set to 1. The HC sets this bit to 1 after it has stopped executing as a result of the Run/Stop bit being set to 0, either by software or by the HC hardware (e.g., internal error).
11:6	RSVD	**Reserved.** Read as 0.

Downloaded from Arrow.com.

USBSTS Bit Descriptions (Continued)

Bit	Name	Description
5	IAA	**Interrupt on Async Advance (R/WC).** System software can force the HC to issue an interrupt the next time the HC advances the Asynchronous Schedule by writing a 1 to the IAADI bit (EHC Memory Offset 10h[6]). This status bit indicates the assertion of that interrupt source.
4	HSE	**Host System Error (R/WC).** The HC sets this bit to 1 when a serious error occurs during a host system access involving the HC module.
3	FLRO	**Frame List Rollover (R/WC).** The HC sets this bit to 1 when the Frame List Index rolls over from its maximum value to 0.
2	PCD	**Port Change Detect (R/WC).** The HC sets this bit to 1 when any port for which the Port Owner bit is set to 0 has a change bit transition from a 0 to a 1 or a Force Port Resume bit transition from a 0 to a 1 as a result of a J-K transition detected on a suspended port. This bit is also set as a result of the Connect Status Change being set to 1 after system software has relinquished ownership of a connected port by writing a 0 to a port's Port Owner bit.
1	USBERRINT	**USB Error Interrupt (R/WC).** The HC sets this bit to 1 when completion of a USB transaction results in an error condition (e.g., error counter underflow). If the transfer descriptor on which the error interrupt occurred also had its IOC bit set, both this bit and USBINT (bit 0) are set.
0	USBINT	**USB Interrupt (R/WC).** The HC sets this bit to 1 on the completion of a USB transaction that results in the retirement of a transfer descriptor that had its IOC bit set. The HC also sets this bit to 1 when a short packet is detected (actual number of bytes received was less than the expected number of bytes).

6.4.4.6 Interrupt Enable Register (USBINTR)

EHC Memory Offset 18h
Type: R/W
Reset Value 00000000h

USBINTR Register Map

31	30	29	28	27	26	25	24	23	22	21	20	19	18	17	16	15	14	13	12	11	10	9	8	7	6	5	4	3	2	1	0
RSVD																ASS	PSS	REC	HCHALTED	RSVD						IAA	HSE	FLRO	PCD	USBERRINT	USBINT

Downloaded from Arrow.com.

USBINTR Bit Descriptions

Bit	Name	Description
31:16	RSVD	**Reserved.** Read as 0.
15	ASS	**Asynchronous Schedule Status.** This bit reports the current real status of the Asynchronous Schedule. If this bit is 0, the status of the Asynchronous Schedule is disabled. If this bit is 1, the status of the Asynchronous Schedule is enabled.
14	PSS	**Periodic Schedule Status.** This bit reports the current real status of the Periodic Schedule. If this bit is 0, the status of the Periodic Schedule is disabled.
13	REC (RO)	**Reclamation (Read Only).** This bit is used to detect an empty Asynchronous Schedule.
12	HCHALTED	**Host Controller Halted.** This bit is a 0 whenever the Run/Stop bit (EHC Memory Offset 10h[0]) is a 1. The HC sets this bit to 1 after it has stopped executing as a result of the Run/Stop bit being set to 0, either by software or by the HC hardware (e.g., internal error).
11:6	RSVD	**Reserved.** Read as 0.
5	IAA	**Interrupt on Async Advance.** System software can force the HC to issue an interrupt the next time the HC advances the Asynchronous Schedule by writing a 1 to the IAAD bit (EHC Memory Offset 10h[6]). This status bit indicates the assertion of that interrupt source.
4	HSE	**Host System Error.** The HC sets this bit to 1 when a serious error occurs during a host system access involving the HC module.
3	FLRO	**Frame List Rollover.** The HC sets this bit to 1 when the Frame List Index rolls over from its maximum value to zero.
2	PCD	**Port Change Detect.** The HC sets this bit to 1 when any port for which the Port Owner bit is set to 0 has a change bit transition from a 0 to a 1 or a Force Port Resume bit transition from a 0 to a 1 as a result of a J-K transition detected on a suspended port. This bit is also set as a result of the Connect Status Change being set to a 1 after system software has relinquished ownership of a connected port by writing a 0 to a port's Port Owner bit.
1	USBERRINT	**USB Error Interrupt.** The HC sets this bit to 1 when completion of a USB transaction results in an error condition (e.g., error counter underflow). If the transfer descriptor on which the error interrupt occurred also had its IOC bit set, both this bit and USBINT (bit 0) are set.
0	USBINT	**USB Interrupt.** The HC sets this bit to 1 on the completion of a USB transaction, which results in the retirement of a transfer descriptor that had its IOC bit set. The HC also sets this bit to 1 when a short packet is detected (actual number of bytes received was less than the expected number of bytes).

6.4.4.7 Frame Index Register (FRINDEX)

EHC Memory Offset 1Ch
Type: R/W
Reset Value 00000000h

Writes must be DWORD writes.

FRINDEX Register Map

31	30	29	28	27	26	25	24	23	22	21	20	19	18	17	16	15	14	13	12	11	10	9	8	7	6	5	4	3	2	1	0
RSVD																FIND															

Downloaded from Arrow.com.

FRINDEX Bit Descriptions

Bit	Name	Description
31:16	RSVD	**Reserved.** Read as 0.
15:0	FIND	**Frame Index.** The value in this register increments at the end of each time frame (e.g., micro-frame). Bits [N:3] are used for the Frame List current index. This means that each location of the frame list is accessed eight times (frames or micro-frames) before moving to the next index.

6.4.4.8 Control Data Structure Segment Register (CTRLDSSEGMEN)

EHC Memory Offset 20h
Type: RO
Reset Value 00000000h

CTRLDSSEGMEN Register Map

31	30	29	28	27	26	25	24	23	22	21	20	19	18	17	16	15	14	13	12	11	10	9	8	7	6	5	4	3	2	1	0
CS																															

CTRLDSSEGMEN Bit Descriptions

Bit	Name	Description
31:0	CS	**CTRLDSSEGMENT.** This 32-bit register corresponds to the most significant address bits [63:32] for all EHCI data structures. This register is not used.

6.4.4.9 Periodic Frame List Base Address Register (PERIODICLISTBASE)

EHC Memory Offset 24h
Type: R/W
Reset Value 00000000h

Writes must be DWORD writes.

PERIODICLISTBASE Register Map

31	30	29	28	27	26	25	24	23	22	21	20	19	18	17	16	15	14	13	12	11	10	9	8	7	6	5	4	3	2	1	0
BAL																				RSVD											

PERIODICLISTBASE Bit Descriptions

Bit	Name	Description
31:12	BAL	**Base Address (Low).** These bits correspond to memory address signals [31:12], respectively.
11:0	RSVD	**Reserved.** Read as 0.

Downloaded from Arrow.com.

6.4.4.10 Current Asynchronous List Address Register (ASYNCLISTADDR)

EHC Memory Offset 28h
Type: R/W
Reset Value 00000000h

Writes must be DWORD Writes.

ASYNCLISTADDR Register Map

31	30	29	28	27	26	25	24	23	22	21	20	19	18	17	16	15	14	13	12	11	10	9	8	7	6	5	4	3	2	1	0
LPL																											RSVD				

ASYNCLISTADDR Bit Descriptions

Bit	Name	Description
31:5	LPL	**Link Pointer (Low).** These bits correspond to memory address signals [31:5], respectively. This field may only reference a Queue Head (QH).
4:0	RSVD	**Reserved.** Read as 0.

6.4.4.11 Configure Flag Register (CONFIGFLAG)

EHC Memory Offset 50h
Type: R/W
Reset Value 00000000h

CONFIGFLAG Register Map

31	30	29	28	27	26	25	24	23	22	21	20	19	18	17	16	15	14	13	12	11	10	9	8	7	6	5	4	3	2	1	0
RSVD																															CF

CONFIGFLAG Bit Descriptions

Bit	Name	Description
31:1	RSVD	**Reserved.** Read as 0.
4:0	CF	**Configure Flag.** Host software sets this bit as the last action in its process of configuring the HC. This bit controls the default port-routing control logic. 0: Port routing control logic default-routes each port to an implementation dependent classic HC. 1: Port routing control logic default-routes all ports to this HC.

6.4.4.12 Port 1 Status and Control Register (PORTSC_1)

EHC Memory Offset 54h
Type: R/W
Reset Value 00000000h

PORTSC_1 Register Map

31	30	29	28	27	26	25	24	23	22	21	20	19	18	17	16	15	14	13	12	11	10	9	8	7	6	5	4	3	2	1	0
RSVD									WKOC_E	WKDSCNNT_E	WKCNNT_E	PTC				PIC		PO	PP	LS		RSVD	PR	SUS	FPR	OCC	OC	PEC	PE	CSC	CC

Downloaded from Arrow.com.

PORTSC_1 Bit Descriptions

Bit	Name	Description
31:23	RSVD	**Reserved.** Read as 0.
22	WKOC_E	**Wake on Over Current Enable.** Writing this bit to a 1 enables the port to be sensitive to over current conditions as wakeup events. This field is 0 if PP (bit 12) is 0.
21	WKDSCNNT_E	**Wake on Disconnect Enable.** Writing this bit to a 1 enables the port to be sensitive to device disconnects as wakeup events.This field is 0 if PP (bit 12) is 0.
20	WKCNNT_E	**Wake on Connect Enable.** Writing this bit to a one enables the port to be sensitive to device connects as wakeup events.This field is zero if PP (bit 12) is zero.
19:16	PTC	**Port Test Control.** When this field is 0, the port is NOT operating in a test mode. A non-zero value indicates that it is operating in test mode and the specific test mode is indicated by the specific value. The encoding of the test mode bits are (0110 - 1111 are reserved): 0000: Test mode not enabled 0001: Test J_state 0010: Test K_state 0011: Test SE0_NAK 0100: Test Packet 0101: Test FORCE_ENABLE
15:14	PIC	**Port Indicator Control.** Writing to this bit has no effect since EHC Memory Offset 04h[16] is 0.
13	PO	**Port Owner.** This bit unconditionally goes to a 0 when the CF bit (EHC Memory Offset 50h[4:0]) makes a 0 to 1 transition. This bit unconditionally goes to 1 whenever the CF bit is 0. System software uses this field to release ownership of the port to a selected HC (in the event that the attached device is not a high speed device). Software writes a 1 to this bit when the attached device is not a high speed device. A 1 in this bit means that a companion HC owns and controls the port.
12	PP	**Port Power.** The function of this bit depends on the value of the PPC bit (EHC Memory Offset 04h[4]). The behavior is as follows: PPC PP Operation. 0 1 RO. HC does not have port power control switches. Each port is hard-wired to power. 1 1/0 R/W. HC has port power control switches. This bit represents the current setting of the switch (0 = off, 1 = on). When power is not available on a port (i.e., PP equals a 0), the port is nonfunctional and does not report attaches, detaches, etc. When an over current condition is detected on a powered port and PPC (EHC Memory Offset 04h[4]) is a 1, the PP bit in each affected port may be transitioned by the host controller from a 1 to 0 (removing power from the port).
11:10	LS	**Line Status.** These bits reflect the current logical levels of the D+ (bit 11) and D- (bit 10) signal lines. These bits are used for detection of low speed USB devices prior to the port reset and enable sequence. This field is valid only when PE (bit 2) is 0 and CC (bit 0) are set to a 1. The encoding of the bits are: Bits [11:10]: USB State Interpretation 00: SE0 not low speed device, perform EHCI reset. 10: J_state not low speed device, perform EHCI reset. 01: K_state low speed device, release ownership of port. 11: Undefined not low speed device, perform EHCI reset. This value of this field is undefined if PP (bit 12) is zero.
9	RSVD	**Reserved.** Read as 0.

Downloaded from Arrow.com.

PORTSC_1 Bit Descriptions

Bit	Name	Description
8	PR	**Port Reset.** When software writes a 1 to this bit (from a 0), the bus reset sequence as defined in the USB Specification v2.0 is started. Software writes a 0 to this bit to terminate the bus reset sequence. 1: Port is in Reset. 0: Port is not in Reset. (Default = 0)
7	SUS	**Suspend.** 1: Port in Suspend state. 0: Port not in Suspend state. PE bit (bit 2) and SUS bit (bit 7) define the port states as follows: 0x: Disable. 10: Enable. 11: Suspend. When in Suspend state, downstream propagation of data is blocked on this port, except for port reset. The blocking occurs at the end of the current transaction, if a transaction was in progress when this bit was written to 1. In the Suspend state, the port is sensitive to resume detection.
6	FPR	**Force Port Resume.** The functionality defined for manipulating this bit depends on the value of SUS (bit 7). For example, if the port is not suspended (SUS and PE (bit 2) bits are a 1) and software transitions this bit to a 1, then the effects on the bus are undefined. 1: Resume detected/driven on port. 0: No resume (K_state) detected/driven on port.
5	OCC	**Over Current Change (R/WC).** This bit gets set to a 1 when there is a change to Over Current Active (bit 4). Software clears this bit by writing a 1.
4	OC	**Over Current Active.** This bit automatically transitions from 1 to 0 when the over current condition is removed. 1: This port currently has an over current condition. 0: This port does not have an over current condition.
3	PEC	**Port Enable/Disable Change (R/WC).** For the root hub, this bit gets set to a 1 only when a port is disabled due to the appropriate conditions existing at the EOF2 point. Software clears this bit by writing a 1 to it. This field is 0 if PP (bit 12) is 0. 1: Port enabled/disabled status has changed. 0: No change.
2	PE	**Port Enabled/Disabled.** Ports can only be enabled by the HC as a part of reset and enable. Software cannot enable a port by writing a 1 to this field. The HC only sets this bit to a 1 when the reset sequence determines that the attached device is a high speed device. This field is 0 if PP (bit 12) is 0. 1: Enable. 0: Disable.
1	CSC	**Connect Status Change (R/WC).** Indicates a change has occurred in the ports Current Connect Status. The HC sets this bit for all changes to the port device connect status, even if system software has not cleared an existing connect status change. Software sets this bit to 0 by writing a 1 to it. This field is 0 if PP (bit 12) is 0**.** 1: Change in Current Connect Status. 0: No change.
0	CC	**Current Connect Status.** This value reflects the current state of the port, and may not correspond directly to the event that caused CSC (bit 1) to be set. This field is 0 if PP (bit 12) is 0. 1: Device is present on port 0: No device is present

Downloaded from Arrow.com.

6.4.4.13 Port 2 Status and Control Register (PORTSC_2)

EHC Memory Offset 58h
Type: R/W
Reset Value 00000000h

PORTSC_2 Register Map

31	30	29	28	27	26	25	24	23	22	21	20	19	18	17	16	15	14	13	12	11	10	9	8	7	6	5	4	3	2	1	0
RSVD									WKOC_E	WKDSCNNT_E	WKCNNT_E	PTC				PIC		PO	PP	LS		RSVD	PR	SUS	FPR	OCC	OC	PEC	PE	CSC	CC

PORTSC_2 Bit Descriptions

Bit	Name	Description
31:23	RSVD	**Reserved.** Read as 0.
22	WKOC_E	**Wake on Over Current Enable.** Writing this bit to a 1 enables the port to be sensitive to over current conditions as wakeup events. This field is 0 if PP (bit 12) is 0.
21	WKDSCNNT_E	**Wake on Disconnect Enable.** Writing this bit to a 1 enables the port to be sensitive to device disconnects as wakeup events.This field is 0 if PP (bit 12) is 0.
20	WKCNNT_E	**Wake on Connect Enable.** Writing this bit to a 1 enables the port to be sensitive to device connects as wakeup events.This field is 0 if PP (bit 12) is 0.
19:16	PTC	**Port Test Control.** When this field is 0, the port is NOT operating in a test mode. A non-zero value indicates that it is operating in test mode and the specific test mode is indicated by the specific value. The encoding of the test mode bits are (0110 - 1111 are reserved): 0000: Test mode not enabled 0001: Test J_state 0010: Test K_state 0011: Test SE0_NAK 0100: Test Packet 0101: Test FORCE_ENABLE
15:14	PIC	**Port Indicator Control.** Writing to this bit has no effect since EHC Memory Offset 04h[16] is 0.
13	PO	**Port Owner.** This bit unconditionally goes to a 0 when the CF bit (EHC Memory Offset 50h[4:0]) makes a 0 to 1 transition. This bit unconditionally goes to 1 whenever the CF bit is 0. System software uses this field to release ownership of the port to a selected HC (in the event that the attached device is not a high speed device). Software writes a 1 to this bit when the attached device is not a high speed device. A 1 in this bit means that a companion HC owns and controls the port.
12	PP	**Port Power.** The function of this bit depends on the value of EHC Memory Offset 04h[4]. The behavior is as follows: PPC — PP — Operation 0 — 1 — RO. HC does not have port power control switches. Each port is hard-wired to power. 1 — 1/0 — R/W. HC has port power control switches. This bit represents the current setting of the switch (0 = off, 1 = on). When power is not available on a port (i.e., PP equals a 0), the port is nonfunctional and does not report attaches, detaches, etc. When an over current condition is detected on a powered port and PPC (EHC Memory Offset 04h[4]) is a 1, the PP bit in each affected port may be transitioned by the host controller from a 1 to 0 (removing power from the port).

Downloaded from Arrow.com.

PORTSC_2 Bit Descriptions

Bit	Name	Description
11:10	LS	**Line Status.** These bits reflect the current logical levels of the D+ (bit 11) and D- (bit 10) signal lines. These bits are used for detection of low speed USB devices prior to the port reset and enable sequence. This field is valid only when PE (bit 2) is 0 and CC (bit 0) is set to 1. The encoding of the bits are: 00: SE0 not low speed device, perform EHCI reset. 10: J_state not low speed device, perform EHCI reset. 01: K_state low speed device, release ownership of port. 11: Undefined not low speed device, perform EHCI reset. This value of this field is undefined if PP (bit 12) is 0.
9	RSVD	**Reserved.** Read as 0.
8	PR	**Port Reset.** When software writes a 1 to this bit (from a 0), the bus reset sequence as defined in the USB Specification v2.0 is started. Software writes a 0 to this bit to terminate the bus reset sequence. 1: Port is in Reset. 0: Port is not in Reset. (Default = 0)
7	SUS	**Suspend.** When in Suspend state, downstream propagation of data is blocked on this port, except for port reset. The blocking occurs at the end of the current transaction, if a transaction was in progress when this bit was written to 1. In the Suspend state, the port is sensitive to resume detection. 1: Port in Suspend state. 0: Port not in Suspend state. PE (bit 2) and SUS define the port states as follows: 0x: Disable. 10: Enable. 11: Suspend.
6	FPR	**Force Port Resume.** The functionality defined for manipulating this bit depends on the value of SUS (bit 7). For example, if the port is not suspended (SUS and PE (bits 7,2]) are a 0 and software transitions this bit to a 1, then the effects on the bus are undefined. 1: Resume detected/driven on port. 0: No resume (K_state) detected/driven on port.
5	OCC	**Over Current Change (R/WC).** This bit gets set to a 1 when there is a change to Over Current Active (bit 4). Software clears this bit by writing a 1.
4	OC	**Over Current Active.** This bit automatically transitions from 1 to 0 when the over current condition is removed. 1: This port currently has an over current condition. 0: This port does not have an over current condition.
3	PEC	**Port Enable/Disable Change (R/WC).** For the root hub, this bit gets set to a 1 only when a port is disabled due to the appropriate conditions existing at the EOF2 point. Software clears this bit by writing a 1. This field is 0 if PP (bit 12) is 0. 1: Port enabled/disabled status has changed. 0: No change.
2	PE	**Port Enabled/Disabled.** Ports can only be enabled by the HC as a part of reset and enable. Software cannot enable a port by writing a 1 to this field. The HC only sets this bit to 1 when the reset sequence determines that the attached device is a high speed device. This field is 0 if PP (bit 12) is 0. 1: Enable. 0: Disable.

Downloaded from Arrow.com.

PORTSC_2 Bit Descriptions

Bit	Name	Description
1	CSC	**Connect Status Change (R/WC).** Indicates a change has occurred in the ports Current Connect Status (bit 0). The HC sets this bit for all changes to the port device connect status, even if system software has not cleared an existing connect status change. Software sets this bit to 0 by writing a 1. This field is 0 if PP (bit 12) is 0. 1: Change in Current Connect Status. 0: No change.
0	CC	**Current Connect Status.** This value reflects the current state of the port, and may not correspond directly to the event that caused the Connect Status Change bit (bit 1) to be set. This field is 0 if PP (bit 12) is 0. 1: Device is present on port. 0: No device is present.

6.4.4.14 Port 3 Status and Control Register (PORTSC_3)

EHC Memory Offset 5Ch
Type: R/W
Reset Value 00000000h

PORTSC_3 Register Map

31	30	29	28	27	26	25	24	23	22	21	20	19	18	17	16	15	14	13	12	11	10	9	8	7	6	5	4	3	2	1	0
RSVD									WKOC_E	WKDSCNNT_E	WKCNNT_E	PTC				PIC		PO	PP	LS		RSVD	PR	SUS	FPR	OCC	OC	PEC	PE	CSC	CC

PORTSC_3 Bit Descriptions

Bit	Name	Description
31:23	RSVD	**Reserved.** Read as 0.
22	WKOC_E	**Wake on Over Current Enable.** Writing this bit to a 1 enables the port to be sensitive to over current conditions as wakeup events. This field is 0 if PP (bit 12) is 0.
21	WKDSCNNT_E	**Wake on Disconnect Enable.** Writing this bit to a 1 enables the port to be sensitive to device disconnects as wakeup events.This field is 0 if PP (bit 12) is 0.
20	WKCNNT_E	**Wake on Connect Enable.** Writing this bit to a 1 enables the port to be sensitive to device connects as wakeup events.This field is 0 if PP (bit 12) is 0.
19:16	PTC	**Port Test Control.** When this field is 0, the port is NOT operating in a test mode. A non-zero value indicates that it is operating in test mode and the specific test mode is indicated by the specific value. The encoding of the test mode bits are: 0000: Test mode not enabled 0001: Test J_state 0010: Test K_state 0011: Test SE0_NAK 0100: Test Packet 0101: Test FORCE_ENABLE 0110-1111: Reserved
15:14	PIC	**Port Indicator Control.** Writing to this bit has no effect since EHC Memory Offset 04h[16] is 0.

Downloaded from Arrow.com.

PORTSC_3 Bit Descriptions

Bit	Name	Description
13	PO	**Port Owner.** This bit unconditionally goes to a 0 when the CF bit (EHC Memory Offset 50h[4:0]) makes a 0 to 1 transition. This bit unconditionally goes to 1 whenever the CF bit is 0. System software uses this field to release ownership of the port to a selected HC (in the event that the attached device is not a high speed device). Software writes a 1 to this bit when the attached device is not a high speed device. A 1 in this field means that a companion HC owns and controls the port.
12	PP	**Port Power.** The function of this bit depends on the value of the EHC Memory Offset 04h[4]. The behavior is as follows: PPC PP Operation 0 1 RO. HC does not have port power control switches. Each port is hard-wired to power. 1 1/0 R/W. HC has port power control switches. This bit represents the current setting of the switch (0 = off, 1 = on). When power is not available on a port (i.e., PP equals a 0), the port is nonfunctional and does not report attaches, detaches, etc. When an over current condition is detected on a powered port and PPC (EHC Memory Offset 04h[4]) is a 1, the PP bit in each affected port may be transitioned by the host controller from a 1 to 0 (removing power from the port).
11:10	LS	**Line Status.** These bits reflect the current logical levels of the D+ (bit 11) and D- (bit 10) signal lines. These bits are used for detection of low speed USB devices prior to the port reset and enable sequence. This field is valid only when PE (bit 2) is 0 and CC (bit 0) is set to a 1. The encoding of the bits are: 00: SE0 not low speed device, perform EHCI reset 10: J_state not low speed device, perform EHCI reset 01: K_state low speed device, release ownership of port 11: Undefined not low speed device, perform EHCI reset. This value of this field is undefined if PP (bit 12) is 0.
9	RSVD	**Reserved.** Read as 0.
8	PR	**Port Reset.** When software writes a 1 to this bit (from a 0), the bus reset sequence as defined in the USB Specification v2.0 is started. Software writes a 0 to this bit to terminate the bus reset sequence. 1: Port is in Reset. 0: Port is not in Reset. (Default = 0)
7	SUS	**Suspend.** When in Suspend state, downstream propagation of data is blocked on this port, except for port reset. The blocking occurs at the end of the current transaction, if a transaction was in progress when this bit was written to 1. In the Suspend state, the port is sensitive to resume detection. 1: Port in Suspend state. 0: Port not in Suspend state. PE (bit 2) and SUS define the port states as follows: 0x: Disable. 10: Enable. 11: Suspend.
6	FPR	**Force Port Resume.** This functionality defined for manipulating this bit depends on the value of SUS (bit 7). For example, if the port is not suspended (SUS (bit 7) and PE (bit 2) bits are a 0) and software transitions this bit to a 1, then the effects on the bus are undefined. 1: Resume detected/driven on port. 0: No resume (K_state) detected/driven on port.
5	OCC	**Over Current Change (R/WC).** This bit gets set to a 1 when there is a change to Over Current Active (bit 4). Software clears this bit by writing a 1.

Downloaded from Arrow.com.

PORTSC_3 Bit Descriptions

Bit	Name	Description
4	OC	**Over Current Active.** This bit automatically transitions from 1 to 0 when the over current condition is removed. 1: This port currently has an over current condition. 0: This port does not have an over current condition.
3	PEC	**Port Enable/Disable Change (R/WC).** For the root hub, this bit gets set to a 1 only when a port is disabled due to the appropriate conditions existing at the EOF2 point. Software clears this bit by writing a 1. This field is 0 if PP (bit 12) is 0. 1: Port enabled/disabled status has changed. 0: No change.
2	PE	**Port Enabled/Disabled.** Ports can only be enabled by the HC as a part of port reset and enable. Software cannot enable a port by writing a 1 to this field. The HC only sets this bit to a 1 when the reset sequence determines that the attached device is a high speed device. This field is 0 if PP (bit 12) is 0. 1: Enable. 0: Disable.
1	CSC	**Connect Status Change (R/WC).** 1: Change in Current Connect Status (bit 0). 0: No change
0	CC	**Current Connect Status.** Indicates a change has occurred in the ports Current Connect Status. The HC sets this bit for all changes to the port device connect status, even if system software has not cleared an existing connect status change. Software sets this bit to 0 by writing a 1. This field is 0 if PP (bit 12) is 0. 1: Device is present on port. 0: No device is present. This value reflects the current state of the port, and may not correspond directly to the event that caused CSC (bit 1) to be set. This field is 0 if PP (bit 12) is 0.

6.4.4.15 Port 4 Status and Control Register (PORTSC_4)

EHC Memory Offset 60h
Type: R/W
Reset Value 00000000h

PORTSC_4 Register Map

31	30	29	28	27	26	25	24	23	22	21	20	19	18	17	16	15	14	13	12	11	10	9	8	7	6	5	4	3	2	1	0
RSVD									WKOC_E	WKDSCNNT_E	WKCNNT_E	PTC				PIC		PO	PP	LS		RSVD	PR	SUS	FPR	OCC	OC	PEC	PE	CSC	CC

PORTSC_4 Bit Descriptions

Bit	Name	Description
31:23	RSVD	**Reserved.** Read as 0.
22	WKOC_E	**Wake on Over Current Enable.** Writing this bit to a 1 enables the port to be sensitive to over current conditions as wakeup events. This field is 0 if PP (bit 12) is 0.
21	WKDSCNNT_E	**Wake on Disconnect Enable.** Writing this bit to a 1 enables the port to be sensitive to device disconnects as wakeup events.This field is 0 if PP (bit 12) is 0.

Downloaded from Arrow.com.

PORTSC_4 Bit Descriptions

Bit	Name	Description
20	WKCNNT_E	**Wake on Connect Enable.** Writing this bit to a 1 enables the port to be sensitive to device connects as wakeup events.This field is 0 if PP (bit 12) is 0.
19:16	PTC	**Port Test Control.** When this field is 0, the port is NOT operating in a test mode. A non-zero value indicates that it is operating in test mode and the specific test mode is indicated by the specific value. 0000: Test mode not enabled 0001: Test J_state 0010: Test K_state 0011: Test SE0_NAK 0100: Test Packet 0101: Test FORCE_ENABLE 0110-1111: Reserved
15:14	PIC	**Port Indicator Control.** Writing to this bit has no effect since the EHC Memory Offset 04h[16] register is 0.
13	PO	**Port Owner.** This bit unconditionally goes to a 0 when CF (EHC Memory Offset 50h[4:0]) makes a 0 to 1 transition. This bit unconditionally goes to 1 whenever the CF bit is 0. System software uses this field to release ownership of the port to a selected HC (in the event that the attached device is not a high speed device). Software writes a 1 to this bit when the attached device is not a high speed device. A 1 in this field means that a companion HC owns and controls the port.
12	PP	**Port Power.** The function of this bit depends on the value of the EHC Memory Offset 04h[4]. The behavior is as follows: PPC PP Operation 0 1 RO. HC does not have port power control switches. Each port is hard-wired to power. 1 1/0 R/W. HC has port power control switches. This bit represents the current setting of the switch (0 = off, 1 = on). When power is not available on a port (i.e., PP equals a 0), the port is nonfunctional and does not report attaches, detaches, etc. When an over current condition is detected on a powered port and PPC (EHC Memory Offset 04h[4]) is a 0, the PP bit in each affected port may be transitioned by the HC from a 1 to 0 (removing power from the port).
11:10	LS	**Line Status.** These bits reflect the current logical levels of the D+ (bit 11) and D- (bit 10) signal lines. These bits are used for detection of low speed USB devices prior to the port reset and enable sequence. This field is valid only when PE (bit 2) is 0 and CC (bit 0) is set to a 1. 00: SE0 not low speed device, perform EHCI reset 10: J_state not low speed device, perform EHCI reset 01: K_state low speed device, release ownership of port 11: Undefined not low speed device, perform EHCI reset. This value of this field is undefined if PP (bit 12) is 0.
9	RSVD	**Reserved.** Read as 0.
8	PR	**Port Reset.** When software writes a 1 to this bit (from a 0), the bus reset sequence as defined in the USB Specification v2.0 is started. Software writes a 0 to this bit to terminate the bus reset sequence. 1: Port is in Reset. 0: Port is not in Reset. (Default = 0)

Downloaded from Arrow.com.

PORTSC_4 Bit Descriptions

Bit	Name	Description
7	SUS	**Suspend.** When in Suspend state, downstream propagation of data is blocked on this port, except for port reset. The blocking occurs at the end of the current transaction, if a transaction was in progress when this bit was written to 1. In the Suspend state, the port is sensitive to resume detection. 1: Port in Suspend state. 0: Port not in Suspend state. PE (bit 2) and SUS define the port states as follows: 0x: Disable. 10: Enable. 11: Suspend.
6	FPR	**Force Port Resume.** This functionality, defined for manipulating this bit, depends on the value of the SUS (bit 7). For example, if the port is not suspended (SUS (bit 7) and PE (bit 2) are a 0) and software transitions this bit to a 1, then the effects on the bus are undefined. 1: Resume detected/driven on port. 0: No resume (K_state) detected/driven on port.
5	OCC	**Over Current Change (R/WC).** This bit gets set to 1 when there is a change to Over Current Active (bit 4). Software clears this bit by writing a 1 to this bit position.
4	OC	**Over Current Active.** This bit automatically transitions from 1 to 0 when the over current condition is removed. 1: This port currently has an over current condition. 0: This port does not have an over current condition.
3	PEC	**Port Enable/Disable Change (R/WC).** For the root hub, this bit gets set to 1 only when a port is disabled due to the appropriate conditions existing at the EOF2 point. Software clears this bit by writing a 1 to it. This field is 0 if PP (bit 12) is 0. 1: Port enabled/disabled status has changed. 0: No change.
2	PE	**Port Enabled/Disabled.** Ports can only be enabled by the HC as a part of the reset and enable. Software cannot enable a port by writing a 1 to this field. The HC only sets this bit to a 1 when the reset sequence determines that the attached device is a high speed device. This field is 0 if PP (bit 12) is 0. 1: Enable. 0: Disable.
1	CSC	**Connect Status Change (R/WC).** Indicates a change has occurred in the ports Current Connect Status (bit 0). The HC sets this bit for all changes to the port device connect status, even if system software has not cleared an existing connect status change. Software sets this bit to 0 by writing a 1 to it. This field is 0 if PP (bit 12) is 0. 1: Change in Current Connect Status. 0: No change.
0	CC	**Current Connect Status.** This value reflects the current state of the port, and may not correspond directly to the event that caused the Connect Status Change bit (bit 1) to be set. This field is 0 if PP (bit 12) is 0. 1: Device is present on port. 0: No device is present.

Downloaded from Arrow.com.

6.4.4.16 Vendor Specific Register 0 (IPREG00)

EHC Memory Offset 90h
Type: R/W
Reset Value 00000000h

This register is for AMD internal debug purposes. Software should never write this register.

6.4.4.17 Vendor Specific Register 1 (IPREG01)

EHC Memory Offset 94h
Type: R/W
Reset Value 00F80010h

This register is for AMD internal debug purposes. Software should never write this register.

6.4.4.18 Vendor Specific Register 2 (IPREG02)

EHC Memory Offset 98h
Type: R/W
Reset Value 00000020h

This register is for AMD internal debug purposes. Software should never write this register.

6.4.4.19 Vendor Specific Register 3 (IPREG03)

EHC Memory Offset 9Ch
Type: R/W
Reset Value 00000001h

This register is for AMD internal debug purposes. Software should never write this register.

6.4.4.20 Vendor Specific Register 4 (IPREG04)

EHC Memory Offset A0h
Type: R/W
Reset Value 00000000h

This register is for AMD internal debug purposes. Software should never write this register.

6.4.4.21 Vendor Specific Register 5 (IPREG05)

EHC Memory Offset A4h
Type: R/W
Reset Value 00000000h

Downloaded from Arrow.com.

6.4.5 USB Device Controller Native Registers

6.4.5.1 Endpoint In Control Register (EPINCTRL)

UDC Memory Offset EPINCTRL_0: 0000h
EPINCTRL_1: 0020h
EPINCTRL_2: 0040h
EPINCTRL_3: 0060h
EPINCTRL_4: 0080h
Type: R/W
Reset Value 00000000h

EPINCTRL Register Map

31	30	29	28	27	26	25	24	23	22	21	20	19	18	17	16	15	14	13	12	11	10	9	8	7	6	5	4	3	2	1	0
RSVD																						RRDY	CNAK	SNAK	NAK	ET		P	RSVD	F	S

EPINCTRL Bit Descriptions

Bit	Name	Description
31:10	RSVD (RO)	**Reserved (Read Only).** Read as 0.
9	RRDY (RO)	**Receive Ready (Read Only).** Multiple RxFIFOs are not implemented, so this bit is reserved.
8	CNAK (WO)	**Clear NAK (Write Only).** Used by the application to clear NAK (bit 6). After the Subsystem sets NAK, the application must clear it by writing a 1 to CNAK after it has decoded the setup packet and determined it is not an invalid command. The application must clear the CNAK bit whenever the subsystem sets it. The subsystem sets the CNAK bit due to the application setting the S bit (bit 0).
7	SNAK (WO)	**Set NAK (Read Only).** Used by the application to set the NAK bit (bit 6). If the NAK bit is already set, a setup packet is still sent to the application.
6	NAK (RO)	**NAK (Read Only).** If set to 1, the endpoint responds to the USB Host with a NAK handshake. If set to 0, the endpoint responds normally. On successful reception of a setup packet (decoded by the application), the subsystem sets both the IN and OUT NAK bits.
5:4	ET	**Endpoint Type.** 00: CONTROL endpoint 01: ISO endpoint 10: BULK endpoint 11: INTERRUPT endpoint
3	P	**Poll Demand from the Application.**
2	RSVD (RO)	**Reserved (RO).** Read as 0.
1	F	**Flush the TxFIFO.**
0	S	**Stall Request from the USB Host.** On successful reception of a setup packet (decoded by the application), the subsystem clears both IN and OUT S bits, and sets both the IN and OUT NAK bits. The application must check for RxFIFO emptiness before setting the IN and OUT STALL bits. For non-setup packets, the subsystem clears either IN or OUT Stall bits only if a Stall handshake is returned to the USB Host and then sets the corresponding NAK bit.

Downloaded from Arrow.com.

6.4.5.2 Endpoint In Status Register (EPINSTS)

UDC Memory Offset EPINSTS_0: 0004h
EPINSTS_1: 0024h
EPINSTS_2: 0044h
EPINSTS_3: 0064h
EPINSTS_4: 0084h
Type: R/WC
Reset Value 00000000h

EPINSTS Register Map

31	30	29	28	27	26	25	24	23	22	21	20	19	18	17	16	15	14	13	12	11	10	9	8	7	6	5	4	3	2	1	0
RSVD																					TDC	HE	RSVD	BNA	IN	RSVD						

EPINSTS Bit Descriptions

Bit	Name	Description
31:11	RSVD (RO)	**Reserved (Read Only).** Read as 0.
10	TDC	**Transmit DMA Completion.** Indicates the transmit DMA has completed transferring a descriptor chain's data to the TxFIFO. After servicing the interrupt, the application must clear this bit.
9	HE	**Host Error Response.** When doing a data transfer, descriptor fetch, or descriptor update for this endpoint, a host error response was received. After servicing the interrupt, the application must clear this bit.
8	RSVD (RO)	**Reserved (RO).** Read as 0.
7	BNA	**Buffer Not Available.** The subsysytem sets this bit when the descriptor's status is not "Host Read". After servicing the interrupt, the application must clear this bit.
6	IN	**IN Token.** An IN token has been received by this endpoint. After servicing the interrupt, the application must clear this bit.
5:0	RSVD (RO)	**Reserved (Read Only).** Read as 0.

Downloaded from Arrow.com.

6.4.5.3 Endpoint In Buffer Size Register (EPINBS)

UDC Memory Offset EPINBS_0: 0008h
EPINBS_1: 0028h
EPINBS_2: 0048h
EPINBS_3: 0068h
EPINBS_4: 0088h
Type: R/W
Reset Value 00000000h

EPINBS Register Map

31	30	29	28	27	26	25	24	23	22	21	20	19	18	17	16	15	14	13	12	11	10	9	8	7	6	5	4	3	2	1	0
RSVD																						BS									

EPINBS Bit Descriptions

Bit	Name	Description
31:10	RSVD (RO)	**Reserved (Read Only).** Read as 0.
9:0	BS	**Buffer Size.** The application can program this field to make each endpoint's buffer adaptive, providing flexibility in buffer size when the interface or configuration is changed. This value is in 32-bit WORDs, and indicates the number of 32-bit WORD entries in the TxFIFO.

6.4.5.4 Endpoint In Max Packet Size Register (EPINMAXP)

UDC Memory Offset EPINMAXP_0: 000Ch
EPINMAXP_1: 002Ch
EPINMAXP_2: 004Ch
EPINMAXP_3: 006Ch
EPINMAXP_4: 008Ch
Type: R/W
Reset Value 00000000h

EPINMAXP Register Map

31	30	29	28	27	26	25	24	23	22	21	20	19	18	17	16	15	14	13	12	11	10	9	8	7	6	5	4	3	2	1	0
RSVD																MAXP															

EPINMAXP Bit Descriptions

Bit	Name	Description
31:10	RSVD (RO)	**Reserved (Read Only).** Read as 0.
15:0	MAXP	**Maximum Packet Size.** This is the value in bytes.

Downloaded from Arrow.com.

6.4.5.5 Endpoint In Data Descriptor Register (EPINDDP)

UDC Memory Offset EPINDDP_0: 0014h
EPINDDP_1: 0034h
EPINDDP_2: 0054h
EPINDDP_3: 0074h
EPINDDP_4: 0094h
Type: R/W
Reset Value 00000000h

EPINDDP Register Map

31	30	29	28	27	26	25	24	23	22	21	20	19	18	17	16	15	14	13	12	11	10	9	8	7	6	5	4	3	2	1	0
DESPTR																															

EPINDDP Bit Descriptions

Bit	Name	Description
31:0	DESPTR	**Data Descriptor Pointer.**

6.4.5.6 Endpoint In Write Confirmation Register (EPINWRC)

UDC Memory Offset EPINWRC_0: 001Ch
EPINWRC_1: 003Ch
EPINWRC_2: 005Ch
EPINWRC_3: 007Ch
EPINWRC_4: 009Ch
Type: W
Reset Value 00000000h

EPINWRC Register Map

31	30	29	28	27	26	25	24	23	22	21	20	19	18	17	16	15	14	13	12	11	10	9	8	7	6	5	4	3	2	1	0
WRC																															

EPINWRC Bit Descriptions

Bit	Name	Description
31:0	WRC	**Write Confirmation.** For slave only mode.

Downloaded from Arrow.com.

6.4.5.7 Endpoint Out Control Register (EPOUTCTRL)

UDC Memory Offset EPOUTCTRL_0: 0200h
EPOUTCTRL_1: 0220h
EPOUTCTRL_2: 0240h
EPOUTCTRL_3: 0260h
EPOUTCTRL_4: 0280h
Type: R/W
Reset Value 00000000h

EPOUTCTRL Register Map

31	30	29	28	27	26	25	24	23	22	21	20	19	18	17	16	15	14	13	12	11	10	9	8	7	6	5	4	3	2	1	0
RSVD																						RRDY	CNAK	SNAK	NAK	ET		RSVD	SN	RSVD	S

EPOUTCTRL Bit Descriptions

Bit	Name	Description
31:10	RSVD (RO)	**Reserved (Read Only).** Read as 0.
9	RRDY (RO)	**Receive Ready (Read Only).** Multiple RxFIFOs are not implemented, so this bit is reserved.
8	CNAK (WO)	**Clear NAK (Write Only).** Used by the application to clear NAK (bit 6). After the subsystem sets NAK, the application must clear it by writing a 1 to the CNAK bit after it has decoded the setup packet and determined it is not an invalid command. The application must clear the CNAK bit whenever the subsystem sets it. The subsystem sets it due to the application setting the S bit (bit 0).
7	SNAK (WO)	**Set NAK (Write Only).** Used by the application to set the NAK bit (bit 6). If NAK (bit 6) is already set, a setup packet is still sent to the application.
6	NAK (RO)	**NAK (Read Only).** If set to 1, the endpoint responds to the USB Host with a NAK handshake. If set to 0, the endpoint responds normally. On successful reception of a setup packet (decoded by the application), the subsystem sets both the IN and OUT NAK bits.
5:4	ET	**Endpoint Type.** 00: CONTROL endpoint. 01: ISO endpoint. 10: BULK endpoint. 11: INTERRUPT endpoint.
3	RSVD	**Reserved.** Read as 0.
2	SN	**Snoop Mode.** In this mode, the subsystem does not check the correctness of OUT packets before transferring them to application memory.
1	RSVD	**Reserved.** Read as 0.
0	S	**Stall Request from the USB Host.** On successful reception of a setup packet (decoded by the application), the subsystem cleares both IN and OUT STALL bits, and sets both the IN and OUT NAK bits. The application must check for RxFIFO emptiness before setting the IN and OUT STALL bits. For non-setup packets, the subsystem clears either IN or OUT STALL bits only if a STALL handshake is returned to the USB Host and then sets the corresponding NAK bit.

Downloaded from Arrow.com.

6.4.5.8 Endpoint Out Status Register (EPOUTSTS)

UDC Memory Offset
EPOUTSTS_0: 0204h
EPOUTSTS_1: 0224h
EPOUTSTS_2: 0244h
EPOUTSTS_3: 0264h
EPOUTSTS_4: 0284h
Type: R/W
Reset Value 00000000h

EPOUTSTS Register Map

31	30	29	28	27	26	25	24	23	22	21	20	19	18	17	16	15	14	13	12	11	10	9	8	7	6	5	4	3	2	1	0
RSVD									RXPKTSIZE												RSVD	HE	RSVD	BNA	RSVD	OUT		RSVD				

EPOUTSTS Bit Descriptions

Bit	Name	Description
31:23	RSVD (RO)	**Reserved (Read Only).** Read as 0.
22:11	RXPKTSIZE	**Receive Packet Size (R/W).** Indicates the number of bytes in the current received packet to be sent to the endpoint. This field is used for slave mode only.
10	RSVD (RO)	**Reserved (Read Only).** Read as 0.
9	HE	**Host Error Response (R/WC).** When doing a data transfer, descriptor fetch, or descriptor update for this endpoint, a host error response was received. After servicing the interrupt, the application must clear this bit.
8	RSVD (RO)	**Reserved (Read Only).** Read as 0.
7	BNA	**Buffer Not Available (R/WC).** The subsysytem sets this bit when the descriptor's status is not "Host Read". After servicing the interrupt, the application must clear this bit.
6	RSVD (RO)	**Reserved (Read Only).** Read as 0.
5:4	OUT	**OUT (R/WC).** An OUT packet has been received by this endpoint. The encoding of these two bits indicates the type of data received. This field is only used in Slave mode. 00: None. 01: Received data. 10: Received Setyp data (8 bytes.) 11: Reserved.
3:0	RSVD	**Reserved.** Read as 0.

Downloaded from Arrow.com.

6.4.5.9 Endpoint Out Frame Number Register (EPOUTFRN)

UDC Memory Offset EPOUTFRN_0: 0208h
EPOUTFRN_1: 0228h
EPOUTFRN_2: 0248h
EPOUTFRN_3: 0268h
EPOUTFRN_4: 0288h
Type: RO
Reset Value 00000000h

EPOUTFRN Register Map

31	30	29	28	27	26	25	24	23	22	21	20	19	18	17	16	15	14	13	12	11	10	9	8	7	6	5	4	3	2	1	0
RSVD																		FRN													

EPOUTFRN Bit Descriptions

Bit	Name	Description
31:14	RSVD	**Reserved.** Read as 0.
13:0	FRN	**Frame Number**. Frame number in which the packet is received. The number is given in microframe resolution for high speed operation. In full speed and low speed operation, the frame number has the frame resolution.

6.4.5.10 Endpoint Out Max Packet Size Register (EPOUTMAXP)

UDC Memory Offset EPOUTMAXP_0: 020Ch
EPOUTMAXP_1: 022Ch
EPOUTMAXP_2: 024Ch
EPOUTMAXP_3: 026Ch
EPOUTMAXP_4: 028Ch
Type: R/W
Reset Value 00000000h

EPOUTMAXP Register Map

31	30	29	28	27	26	25	24	23	22	21	20	19	18	17	16	15	14	13	12	11	10	9	8	7	6	5	4	3	2	1	0
RSVD																MAXP															

EPOUTMAXP Bit Descriptions

Bit	Name	Description
31:10	RSVD	**Reserved (Read Only).** Read as 0.
15:0	MAXP	**Maximum Packet Size.** This is the value in bytes.

Downloaded from Arrow.com.

6.4.5.11 Endpoint Out Setup Register (EPOUTSUBP)

UDC Memory Offset EPOUTSUBP_0: 0210h
EPOUTSUBP_1: 0230h
EPOUTSUBP_2: 0250h
EPOUTSUBP_3: 0270h
EPOUTSUBP_4: 0290h
Type: R/W
Reset Value 00000000h

EPOUTSUBP Register Map

31	30	29	28	27	26	25	24	23	22	21	20	19	18	17	16	15	14	13	12	11	10	9	8	7	6	5	4	3	2	1	0
SUBPTR																															

EPOUTSUBP Bit Descriptions

Bit	Name	Description
31:0	SUBPTR	**Setup Buffer Pointer.** This register is used for setup commands on Control endpoints. For other endpoint types this register is reserved.

6.4.5.12 Endpoint Out Data Descriptor Register (EPOUTDDP)

UDC Memory Offset EPOUTDDP_0: 0214h
EPOUTDDP_1: 0234h
EPOUTDDP_2: 0254h
EPOUTDDP_3: 0274h
EPOUTDDP_4: 0294h
Type: R/W
Reset Value 00000000h

EPOUTDDP Register Map

31	30	29	28	27	26	25	24	23	22	21	20	19	18	17	16	15	14	13	12	11	10	9	8	7	6	5	4	3	2	1	0
DESPTR																															

EPOUTDDP Bit Descriptions

Bit	Name	Description
31:0	DESPTR	**Data Descriptor Pointer.**

Downloaded from Arrow.com.

6.4.5.13 Endpoint Out Read Confirmation Register (EPOUTRDC)

UDC Memory Offset EPOUTRDC_0: 021Ch
EPOUTRDC_1: 023Ch
EPOUTRDC_2: 025Ch
EPOUTRDC_3: 027Ch
EPOUTRDC_4: 029Ch
Type: WC
Reset Value 00000000h

EPOUTRDC Register Map

31	30	29	28	27	26	25	24	23	22	21	20	19	18	17	16	15	14	13	12	11	10	9	8	7	6	5	4	3	2	1	0
RDC																															

EPOUTRDC Bit Descriptions

Bit	Name	Description
31:0	RDC	**Read Confirmation.** Read confirmation for zero length OUT data in slave only mode**.**

6.4.5.14 Device Configuration Register (DEVCFG)

UDC Memory Offset 0400h
Type: R/W
Reset Value 00000020h

DEVCFG Register Map

31	30	29	28	27	26	25	24	23	22	21	20	19	18	17	16	15	14	13	12	11	10	9	8	7	6	5	4	3	2	1	0
SOFTRST	RSVD	DMARST	RSVD										SD	CSR_PRG	HSTAT	HSTC			FSTC			PED	STAT		RSVD	PI	SS	SP	RWKP	SDP	

DEVCFG Bit Descriptions

Bit	Name	Description
31	SOFTRST (WO)	**Software Reset (Write Only).** When set to 1, this bit causes an immediate and unconditional reset of the whole controller. This is a write only bit, reads will always return 0.
30	RSVD	**Reserved.** Write as read.
29	DMARST	**DMA Reset.** When set to 1b, this bit causes a reset of the DMA machine. Software must write 0b to end the reset. Software must ensure that all DMA start events are disabled before asserting DMA reset.
28:19	RSVD (RO)	**Reserved (Read Only).** Read as 0.
18	SD	**Set Descriptor.** Indicates that the device supports Set Descriptor request. 0: The subsystem core returns a STALL handshake to the USB host. 1: The setup packet for the Set Descriptor request passes to the application.
17	CSR_PRG	**Dynamic CSR Programming.** The application is able to program the UDC registers dynamically whenever it has received an interrupt for either for a Set Configuration or a Set Interface. The subsystem core returns a NAK handshake during the STATUS IN stage of both the Set Configuration and Set Interface requests until the application has written 1 to CSR_DONE (UDC Memory Offset 0404h[13]) if this bit is enabled.

Downloaded from Arrow.com.

DEVCFG Bit Descriptions (Continued)

Bit	Name	Description
16	HSTAT	**Halt Status.** This bit indicates if the UDC must respond with a STALL or an ACK handshake when the USB Host has issued a Clear_Feature (ENDPOINT_HALT) request for endpoint 0. Options are: 0: ACK 1: STALL
15:13	HSTC	**High Speed Timeout Calibration.** This field indicates the number of PHY clocks for the time out counter of the UDC. These bits are used by the application to increase the time out value (736 to 848 bit times in high speed operation) which depends on the delay of the PHY generating line state condition. The default time out value is 736 bit times.
12:10	FSTC	**Full Speed Timeout Calibration.** This field indicates the number of PHY clocks for the time out counter of the UDC. These bits are used by the application to increase the time out value (16 to 18 bit times in full speed operation) which depends on the delay of the PHY generating line state condition. The default time out value is 16 bit times.
9	PED	**PHY Error Detect.** If this bit is set by the application, the device will detect the internal Phy_rxvalid or phy_rxactive input signal to be continuously asserted for 2 ms, indicating PHY error.
8:7	STATUS	**STATUS.** These bits control how the UDC reacts on data packets during the STATUS-OUT stage of a CONTROL transfer. See Table 6-16 on page 323 for detailed information.
6	RSVD (RO)	**Reserved (Read Only).** Read as 0.
5	PI (RO)	**PHY Interface (Read Only).** This bit indicates if the UTMI PHY must support an 8-bit of 16-bit interface. 0: 8 bit 1: 16 bit
4	SS	**Sync Frame Support.** Indicates that the device supports Sync Frame.
3	SP	**Self-Powered.** Indicates that the device is self-powered.
2	RWKP	**Remote Wakeup Capability.** Indicates that the device is remote wake up capable.
1:0	SPD	**Device Speed.** 00: HS 01: FS 10: LS 11: FS

Downloaded from Arrow.com.

Table 6-16. UDC Reaction During the STATUS-OUT Stage of a CONTROL Transfer

Packet Length	SETUP Decode	DEVCFG. Status	Handshake to Host	Forward Packet to Application?
0	Internal	0x	ACK	No
		11		
		10	Reserved	
	External	0x	According to CNAK, SNAK and S field of EPOUTCTRL_x	Yes
		11		
		10	Reserved	
>0	Internal	00	According to CNAK, SNAK and S field of EPOUTCTRL_x	Yes
		01	STALL	Yes
		10	Reserved	
		11	STALL	No
	External	0x	According to CNAK, SNAK and S field of EPOUTCTRL_x	Yes
		10	Reserved	
		11	STALL	No

6.4.5.15 Device Control Register (DEVCTRL)

UDC Memory Offset 0404h
Type: R/W
Reset Value 00000000h

DEVCTRL Register Map

31	30	29	28	27	26	25	24	23	22	21	20	19	18	17	16	15	14	13	12	11	10	9	8	7	6	5	4	3	2	1	0
THLEN								BRLEN								RSVD		CSR_DONE	DEVNAK	SCLD	SD	MODE	BREN	THE	BF	BE	DU	TDE	RDE	RSVD	RES

DEVCTRL Bit Descriptions

Bit	Name	Description
31:24	THLEN	**Threshold Length.** Indicates the number (THLEN+1) of DWORDs in the RxFIFO before the DMA can start data transfer.
23:16	BRLEN	**Burst Length.** Indicates the length in DWORDs of a single burst on the AHB. The subsystem sends BRLEN+1 DWORDs.
15:14	RSVD (RO)	**Reserved (Read Only).** Read as 0.
13	CSR_DONE	**CSR Programming Done.** This bit is used by the application to tell the subsystem core when it has completed programming all the required UDC registers such that the subsystem core can send an ACK handshake to the current Set Configuration or Set Interface command. Reads return always 0.
12	DEVNAK	**NAK all OUT EPs.** If this bit is set by the application, the subsystem core returns a NAK handshake to all OUT endpoints. By writing 1 to this bit, the application does not need to write 1 to the SNAK bit of each Endpoint Control Register (UDC Memory Offset EPOUTCTRL_x: 0200h-0280h[7]).
11	SCLD	**Scale Down.** Used for simulation speed-up.

Downloaded from Arrow.com.

DEVCTRL Bit Descriptions (Continued)

Bit	Name	Description
10	SD	**Soft Disconnect.** The application software uses this bit to signal the UDC20 to soft-disconnect. When set to 1 this bit causes the device to enter the disconnect state.
9	MODE	**Mode.** Enables the application to dictate the subsystem's operation in either DMA mode (1) or slave only mode (0).
8	BREN	**Burst Enable.** When this bit is set, transfers on the AHB are split into bursts.
7	THE	**Threshold Enable.** When this bit is set, a number of quadlets equivalent to the threshold value is transferred from the RxFIFO to the memory.
6	BF	**Buffer Full.** The DMA is in Buffer Fill mode and transfers data into contiguous locations pointed to by the buffer address.
5	BE (RO)	**System Endianess (Read Only).** When this bit is set, this indicates a big endian system.
4	DU	**Descriptor Update.** When set, the DMA updates the descriptor at the end of each packet processed.
3	TDE	**Transmit DMA Enable.**
2	RDE	**Receive DMA Enable.**
1	RSVD (RO)	**Reserved (Read Only)** Read as 0.
0	RES	**Resume.** Resume signalling on the USB.

6.4.5.16 Device Status Register (DEVSTS)

UDC Memory Offset 0408h
Type: RO
Reset Value 000x0000h

DEVSTS Register Map

31	30	29	28	27	26	25	24	23	22	21	20	19	18	17	16	15	14	13	12	11	10	9	8	7	6	5	4	3	2	1	0
TS														SESSVLD	PHYERROR	RXFIFEMPTY	ENUMSPD		SUSP	ALT				INTF				CFG			

DEVSTS Bit Descriptions

Bit	Name	Description
31:18	TS	**Number of Frames.** Frame number of the received SOF. Reset value is 0000h.
17	SESSVLD	**Session Valid.** The voltage on the USB_VBUS pin (M15) is above 1.2V. This bit is used in the UDC context to detect the connect state.
16	PHYERROR	**PHY Error.** Either the interma; phy_rxvaliid of phy_rxactive input signal is detected to be continuously asserted for 2 ms, indicating a PHY error. The subsystem goes to the Suspend state as a result.
15	RXFIFEMPTY	**FIFO Empty.** RxFIFO emptiness.
14:13	ENUMSPD	**Enumerated Speed.** These bits hold the speed at which the subsystem comes up after the Speed Enumeration. Possible options are 00: HS 01: FS 10: LS

Downloaded from Arrow.com.

DEVSTS Bit Descriptions (Continued)

Bit	Name	Description
12	SUSP	**Suspend Status.** This bit is set as long as a Suspend condition is detected on the USB
11:8	ALT	**Alternate Setting.** This field represents the alternate setting to which the SUSP interface is switched
7:4	INTF	**Interface.** This field reflects the interface set by the SetInterface command.
3:0	CFG	**Configuration.** This field reflects the configuration set by the SetConfiguration command.

6.4.5.17 Device Interrupt Register (DEVINTR)

UDC Memory Offset 040Ch
Type: R/WC
Reset Value 00000000h

DEVINTR Register Map

31	30	29	28	27	26	25	24	23	22	21	20	19	18	17	16	15	14	13	12	11	10	9	8	7	6	5	4	3	2	1	0
RSVD																								SVC	ENUM	SOF	US	UR	ES	SI	SC

DEVINTR Bit Descriptions

Bit	Name	Description
31:8	RSVD (RO)	**Reserved (Read Only).** Read as 0.
7	SVC	**Session Valid Changed**. The value of UDC Memory Offset 0408h[17] has changed.
6	ENUM	**Speed Enumeration Complete.**
5	SOF	**Start Of Frame Detected.** An SOF token is detected on the USB.
4	US	**Suspend.** A suspend is detected on the USB.
3	UR	**Reset.** A reset is detected on the USB.
2	ES	**Idle.** An idle state has been detected on the USB for 3 ms.
1	SI	**Set Interface Command.** The device has received a SetInterface command.
0	SC	**Set Configuration Command. T**he device has received a SetConfiguration command.

6.4.5.18 Device Interrupt Mask Register (DEVINTRMSK)

UDC Memory Offset 0410h
Type: R/W
Reset Value 0000003Eh

DEVINTRMSK Register Map

31	30	29	28	27	26	25	24	23	22	21	20	19	18	17	16	15	14	13	12	11	10	9	8	7	6	5	4	3	2	1	0
RSVD																								SVCM	ENUMM	SOFM	USM	URM	ESM	SIM	SCM

Downloaded from Arrow.com.

DEVINTRMSK Bit Descriptions

Bit	Name	Description
31:8	RSVD (RO)	**Reserved. (Read Only)** Read as 0.
7	SVCM	**Session Valid Changed Mask.** Mask the SVC interrupt.
6	ENUMM	**Speed Enumeration Complete Mask.** Mask the ENUM interrupt.
5	SOFM	**Start Of Frame Mask.** Mask the ENUM interrupt.
4	USM	**Suspend.** Mask the US interrupt.
3	URM	**Reset.** Mask the UR interrupt.
2	ESM	**Idle.** Mask the ES interrupt.
1	SIM	**Set Interface Command.** Mask the SI interrupt.
0	SCM	**Set Configuration Command.** Mask the SC interrupt.

6.4.5.19 Endpoint Interrupt Register (EPINTR)

UDC Memory Offset 0414h
Type: R/WC
Reset Value 00000000h

EPINTR Register Map

31	30	29	28	27	26	25	24	23	22	21	20	19	18	17	16	15	14	13	12	11	10	9	8	7	6	5	4	3	2	1	0
RSVD											OUTEP					RSVD											INEP				

EPINTR Bit Descriptions

Bit	Name	Description
31:21	RSVD (RO)	**Reserved. (Read Only)** Read as 0.
20:16	OUTEP	**OUT Endpoint.** A bit is set when there is an event on the corresponding OUT endpoint (bit 16 for EP0, bit 17 for EP1, etc).
15:5	RSVD (RO)	**Reserved (Read Only).** Read as 0.
4:0	INEP	**IN Endpoint.** A bit is set when there is an event on the corresponding IN endpoint (bit 0 for EP0, bit 1 for EP1, etc).

6.4.5.20 Endpoint Interrupt Mask Register (EPINTRMSK)

UDC Memory Offset 0418h
Type: R/W
Reset Value 001F001Fh

EPINTRMSK Register Map

31	30	29	28	27	26	25	24	23	22	21	20	19	18	17	16	15	14	13	12	11	10	9	8	7	6	5	4	3	2	1	0
RSVD											OUTEPM					RSVD											INEPM				

Downloaded from Arrow.com.

EPINTRMSK Bit Descriptions

Bit	Name	Description
31:21	RSVD (RO)	**Reserved (Read Only).** Read as 0.
20:16	OUTEPM	**OUT Endpoint Mask (R/WC).** Mask interrupts for events on the corresponding OUT endpoint (bit 16 for EP0, bit 17 for EP1, etc).
15:5	RSVD (RO)	**Reserved (Read Only).** Read as 0.
4:0	INEPM	**IN Endpoint Mask (R/WC).** Mask interrupts for events on the corresponding IN endpoint (bit 0 for EP0, bit 1 for EP1, etc).

6.4.5.21 Endpoint Register (EPREG)

UDC Memory Offset EP0REG: 0504h
EP1REG: 0508h
EP2REG: 050Ch
EP3REG: 0510h
EP4REG: 0514h
EP5REG: 0518h
EP6REG: 051Ch
EP7REG: 0520h
EP8REG: 0524h
Type: R/W
Reset Value 00000000h

Read and Writes must be DWORD Read and Writes.

EPREG Register Map

31	30	29	28	27	26	25	24	23	22	21	20	19	18	17	16	15	14	13	12	11	10	9	8	7	6	5	4	3	2	1	0
MULT		MAXP											ALTS				IF				CFG				ET		ED	EN			

EPREG Bit Descriptions

Bit	Name	Description
31:30	MULT	**ISO number.** Number of ISO transfers per microframe. Reserved for non-isochronous endpoints.
29:19	MAXP	**Maximum Packet Size.**
18:15	ALTS	**Alternate Setting.** Alternate setting to which this endpoint belongs.
14:11	IF	**Interface.** Interface number to which this endpoint belongs.
10:7	CFG	**Configuration.** Configuration number to which this endpoint belongs.
6:5	ET	**Endpoint Type.** 00: Control 01: Isochronous 10: Bulk 11: Interrupt
4	ED	**Endpoint Direction.** 0: OUT 1: IN
3:0	EN	**Endpoint Number.**

Downloaded from Arrow.com.

6.4.5.22 Receive FIFO (RXFIFOMEM)

UDC Memory Offset 0800h-BFCh
Type: R/W
Reset Value xxxxxxxxh

Read and writes must be DWORD read and writes.

6.4.5.23 Transmit FIFO (TXFIFOMEM)

UDC Memory Offset 0C00h-11FCh
Type: R/W
Reset Value xxxxxxxxh

Read and writes must be DWORD read and writes.

6.4.6 USB Option Controller Native Registers

6.4.6.1 USB Option Capability Register (UOCCAP)

UOC Memory Offset 00h
Type: R/W
Reset Value 000003EAh

UOCCAP Register Map

31	30	29	28	27	26	25	24	23	22	21	20	19	18	17	16	15	14	13	12	11	10	9	8	7	6	5	4	3	2	1	0
RSVD												WKOCEN	RSVD	WKVBVEN	RSVD	APU	OCP	OCR				PEP2	PEP1	PPH4		PPH3		PPH2		PPH1	

UOCCAP Bit Descriptions

Bit	Name	Description
31:20	RSVD (RO)	**Reserved (Read Only).** Read as 0.
19	WKOCEN	**Wake on Over Current Enable.** When this bit is set, an over current event for Port 4 sets PMESTS in MSR 51200009h[36].
18	RSVD	**Reserved.** Write as read.
17	WKVBVEN	**Wake on VBusValid Change Enable.** When this bit is set, then a change on the VBus Valid status sets PMESTS in MSR 51200009h[36]**.**
16	RSVD	**Reserved.** Write as read.
15	APU	**Automatic Pull-up Enable.** This bit controls how the pull-up resistor on USB4_DATPOS (ball G17) is activated when the port is assigned to the device controller. 0: Software needs to activate the pull-up. 1: The pull-up is activated as soon as VBUSVLD (UOC Memory Offset 04h[8]) is 1. When a 1 is written to this bit then UOC Memory Offset 0Ch[7] is also set.
14	OCP	**Over Current Polarity.** 0: Over current condition when USB_OC_SENS# (ball N15) = 0. 1: Over current condition when USB_OC_SENS# = 1.
13:10	OCR	**Over Current Reporting.** These bits control how the over current reporting to the status bits OHC Memory Offset 50h[1], OHC Memory Offset 54, 58, 5C, 60h[3] and EHC Memory Offset 54, 58, 5C, 60h[4], are handled from USB_OC_SENS#; OCR[0] controls Port 1, OCR[1] Port 2, etc. OCR[x] = 0: No reporting to status registers. OCR[x] = 1: Reporting to status registers.
9	PEP2	**Power Enable Polarity 2.** This bit controls the active level for USB_PWR_EN2 (ball P16). 0: Port power enabled with output of 0. 1: Port power enabled with output of 1.

Downloaded from Arrow.com.

UOCCAP Bit Descriptions (Continued)

Bit	Name	Description
8	PEP1	**Power Enable Polarity 1.** This bit controls the active level for USB_PWR_EN1 (Ball P17). 0: Port power enabled with output of 0. 1: Port power enabled with output of 1.
7:6	PPH4	**Port Power Handling.** These bits control how the port power control bits from the HCs are mapped from the PPS bits OHC Memory Offset 54, 58, 5C, 60h[8] and the PP bits EHC Memory Offset 54, 58, 5C, 60h[12], to USB_PWR_EN1 and USB_PWR_EN2. 00: No power: the host power control bits have no effect on USB_PWR_EN1 and USB_PWR_EN2. 01: Ganged power: the host power control bits affect both, USB_PWR_EN1 and USB_PWR_EN2. 10: Individual power 1: the host power control bits affect USB_PWR_EN1. 11: Individual power 2: the host power control bits affect USB_PWR_EN2. If more than one port is assigned to either USB_PWR_EN1 or USB_PWR_EN2, the activity on the pin is the logic OR of all assigned port power bits.
5:4	PPH3	
3:2	PPH2	
1:0	PPH1	

6.4.6.2 USB Option Multiplex Register (UOCMUX)

UOC Memory Offset 04h
Type: R/W
Reset Value 00000000h

UOCMUX Register Map

31	30	29	28	27	26	25	24	23	22	21	20	19	18	17	16	15	14	13	12	11	10	9	8	7	6	5	4	3	2	1	0
RSVD																							VBUSVLD	RSVD					PUEN	PMUX	

UOCMUX Bit Descriptions

Bit	Name	Description
31:9	RSVD (RO)	**Reserved (Read Only).** Read as 0.
8	VBUSVLD	**VBus Valid.** This bit is set when the voltage on USB_VBUS is above 4.0V. This bit is only valid when UOC Memory Offset 0Ch[7] is set.
7:3	RSVD (RO)	**Reserved (Read Only).** Read as 0.
2	PUEN	**Pull-up Enable.** When automatic pull-up enable is configured (UOC Memory Offset 00h[15] = 1), this bit is read only and has the same value as VBUSVLD (bit 8). When configured in software control, this bit enables the pull-up resistor on USB4_DATPOS (ball G17) if UOC Memory Offset 0Ch[7] is set. In both cases UOC Memory Offset 0Ch[7] must be set to 1 in order to activate the pull-up. This bit is ignored when PMUX (bit[1:0]) is not 11. 0: Pull-up disabled. 1: Pull-up activated.
1:0	PMUX	**Port Mux Control.** 0x: The port is suspended and not assigned to either controller. 10: The port is assigned to the HC. 11: The port is assigned to the device controller.

Downloaded from Arrow.com.

6.4.6.3 USB Reserved 0 (USB_RSVD0)

UOC Memory Offset 08h
Type: RO
Reset Value 000008xxh

This register is reserved.

6.4.6.4 USB Option Control Register (UOCCTL)

UOC Memory Offset 0Ch
Type: R/W
Reset Value 00000200h

UOCCTL Register Map

31	30	29	28	27	26	25	24	23	22	21	20	19	18	17	16	15	14	13	12	11	10	9	8	7	6	5	4	3	2	1	0
RSVD																								PADEN	RSVD					PMUX	

UOCCTL Bit Descriptions

Bit	Name	Description
31:29	RSVD (RO)	**Reserved (Read Only).** Read as 0.
28:24	RSVD	**Reserved.** Write as read.
23:20	RSVD (RO)	**Reserved (Read Only).** Read as 0.
19:16	RSVD	**Reserved.** Write as read.
15:12	RSVD (RO)	**Reserved (Read Only).** Read as 0.
11	RSVD	**Reserved**. The value of this bit must not be changed after system initialization.
10:8	RSVD	**Reserved.** Write as read.
7	PADEN	**Pad Enable.** When set, this bit enables the comparator circuitry for VBUS detection. Writing a 1 to UOC Memory Offset 00h[15] sets this bit to 1. Writing 0 to this bit also resets UOC Memory Offset 00h[15] to 0.
6:2	RSVD	**Reserved.** Write as read.
1:0	PMUX	**Port Mux Control.** This field is aliased from UOC Memory Offset 04h[1:0]. 0x: The port is not assigned to any controller. 10: The port is assigned to the HC. 11: The port is assigned to the device controller.

6.4.6.5 USB Reserved 1 (USB_RSVD1)

UOC Memory Offset 10h
Type: R/W
Reset Value 00000000h

This register is reserved. Write as read.

6.4.6.6 USB Reserved 2 (USB_RSVD2)

UOC Memory Offset 14h
Type: R/WC
Reset Value 00000000h

This register is reserved. Write as read.

6.4.6.7 USB Reserved 3 (USB_RSVD3)

UOC Memory Offset 18h
Type: R/W
Reset Value 00000000h

This register is reserved. Write as read.

Downloaded from Arrow.com.

6.5 IDE Controller Register Descriptions

The control registers for the IDE controller are divided into three sets:

- Standard GeodeLink™ Device (GLD) MSRs
- IDE Controller Specific MSRs
- IDE Controller Native Registers

The MSRs are accessed via the RDMSR and WRMSR processor instructions. The MSR address is derived from the perspective of the CPU Core. See Section 4.2 "MSR Addressing" on page 60 for more details on MSR addressing.

The Native registers are accessed as I/O Offsets from a GLIU IOD Descriptor and are BYTE, WORD and DWORD accessible.

Tables 6-17 through 6-19 are IDE Controller register summary tables that include reset values and page references where the bit descriptions are provided.

Table 6-17. Standard GeodeLink™ Device MSRs Summary

MSR Address	Type	Register Name	Reset Value	Reference
51300000h	RO	GLD Capabilities MSR (IDE_GLD_MSR_CAP)	00000000_005xxh	Page 332
51300001h	RW	GLD Master Configuration MSR (IDE_GLD_MSR_CONFIG)	00000000_0000F000h	Page 333
51300002h	RO	GLD SMI MSR (IDE_GLD_MSR_SMI)	00000000_00000000h	Page 333
51300003h	R/W	GLD Error MSR (IDE_GLD_MSR_ERROR)	00000000_00000000h	Page 334
51300004h	R/W	GLD Power Management MSR (IDE_GLD_MSR_PM)	00000000_00000000h	Page 335
51300005h	R/W	GLD Diagnostic MSR (IDE_GLD_MSR_DIAG)	00000000_00000000h	Page 335

Table 6-18. IDE Controller Specific MSRs Summary

MSR Address	Type	Register Name	Reset Value	Reference
51300008h	R/W	IDE Controller Bus Master Control Registers Base Address (IDE_IO_BAR)	00000000_0000CC01h	Page 336
51300009h	---	Reserved	---	---
51300010h	R/W	IDE Controller Configuration Register (IDE_CFG)	00000000_00000000h	Page 336
51300012h	R/W	IDE Controller Drive Timing Control Register (IDE_DTC)	A8A80000_A8A80000h	Page 337
51300013h	R/W	IDE Controller Cycle Time and Address Setup Time Register (IDE_CAST)	FF0000F0_FF0000F0h	Page 338
51300014h	R/W	IDE Controller UDMA Extended Timing Control Register (IDE_ETC)	03030000_03030000h	Page 339
51300015h	R/W	IDE Power Management Register (IDE_PM)	00000000_00000000h	Page 340

Downloaded from Arrow.com.

Table 6-19. IDE Native Registers Summary

IDE I/O Offset	Type	Register Name	Reset Value	Reference
00h	R/W	Bus Master Command (IDE_BM_CMD)	00h	Page 341
01h	---	Reserved	---	---
02h	R/W	Bus Master Status (IDE_BM_STS)	00h	Page 341
03h	---	Reserved	---	---
04h	R/W	Bus Master PRD Table Address - Primary (IDE_BM_PRD)	00000000h	Page 342
08h-0Fh	---	Reserved. Write accesses are ignored, read accesses return 0.	---	---

6.5.1 Standard GeodeLink™ Device (GLD) MSRs

6.5.1.1 GLD Capabilities MSR (IDE_GLD_MSR_CAP)

MSR Address 51300000h
Type RO
Reset Value 00000000_005xxh

IDE_GLD_MSR_CAP Register Map

63	62	61	60	59	58	57	56	55	54	53	52	51	50	49	48	47	46	45	44	43	42	41	40	39	38	37	36	35	34	33	32
RSVD																															
31	30	29	28	27	26	25	24	23	22	21	20	19	18	17	16	15	14	13	12	11	10	9	8	7	6	5	4	3	2	1	0
RSVD								DEV_ID																REV_ID							

IDE_GLD_MSR_CAP Bit Descriptions

Bit	Name	Description
63:24	RSVD	**Reserved.** Reads as 0.
23:8	DEV_ID	**Device ID.** Identifies module.
7:0	REV_ID	**Revision ID.** Identifies module revision. See *AMD Geode™CS5536 Companion Device Specification Update* document for value.

Downloaded from Arrow.com.

6.5.1.2 GLD Master Configuration MSR (IDE_GLD_MSR_CONFIG)

MSR Address 51300001h
Type RW
Reset Value 00000000_0000F000h

IDE_GLD_MSR_CONFIG Register Map

63	62	61	60	59	58	57	56	55	54	53	52	51	50	49	48	47	46	45	44	43	42	41	40	39	38	37	36	35	34	33	32
RSVD																															
31	30	29	28	27	26	25	24	23	22	21	20	19	18	17	16	15	14	13	12	11	10	9	8	7	6	5	4	3	2	1	0
RSVD																									PRI			RSVD	PID		

IDE_GLD_MSR_CONFIG Bit Descriptions

Bit	Name	Description
63:7	RSVD (RO)	**Reserved (Read Only).**
6:4	PRI	**Priority Level.** Always write 0.
3	RSVD (RO)	**Reserved (Read Only).**
2:0	PID	**Priority ID.** Always write 0.

6.5.1.3 GLD SMI MSR (IDE_GLD_MSR_SMI)

MSR Address 51300002h
Type RO
Reset Value 00000000_00000000h

IDE_GLD_MSR_SMI Register Map

63	62	61	60	59	58	57	56	55	54	53	52	51	50	49	48	47	46	45	44	43	42	41	40	39	38	37	36	35	34	33	32
RSVD																															
31	30	29	28	27	26	25	24	23	22	21	20	19	18	17	16	15	14	13	12	11	10	9	8	7	6	5	4	3	2	1	0
RSVD																															

IDE_GLD_MSR_SMI Bit Descriptions

Bit	Name	Description
63:0	RSVD	**Reserved.** Read returns 0.

Downloaded from Arrow.com.

6.5.1.4 GLD Error MSR (IDE_GLD_MSR_ERROR)

MSR Address 51300003h
Type R/W
Reset Value 00000000_00000000h

The flags are set by internal conditions. The internal conditions are enabled if the EN bit is 1. Reading the FLAG bit returns the value; writing 1 clears the FLAG; writing 0 has no effect.

IDE_GLD_MSR_ERROR Register Map

63	62	61	60	59	58	57	56	55	54	53	52	51	50	49	48	47	46	45	44	43	42	41	40	39	38	37	36	35	34	33	32
RSVD																														UNEXP_ADDR_ERR_FLAG	UNEXP_TYPE_ERR_FLAG
31	30	29	28	27	26	25	24	23	22	21	20	19	18	17	16	15	14	13	12	11	10	9	8	7	6	5	4	3	2	1	0
RSVD																														UNEXP_ADDR_ERR_MASK	UNEXP_TYPE_ERR_MASK

IDE_GLD_MSR_ERROR Bit Description

Bit	Name	Description
63:34	RSVD	**Reserved.** These bits are hardwired to 0.
33	UNEXP_ADDR_ ERR_FLAG	**Unexpected Address Error Flag.** If high, records that ERR was generated and the GLCP master error signal was asserted due to an unexpected address occurring. Write 1 to clear; writing 0 has no effect. UNEXP_ADDR_ERR_MSK (bit 1) must be low to generate ERR, set flag, and assert the GLCP master error signal. Once clear, the GLCP master error signal is de-asserted.
32	UNEXP_TYPE_ ERR_FLAG	**Unexpected Type Error Flag.** If high, records that ERR was generated and the GLCP master error signal was asserted due to an unexpected type occurring. Write 1 to clear; writing 0 has no effect. UNEXP_TYPE_ERR_MSK (bit 0) must be low to generate ERR, set flag, and assert the GLCP master error signal. Once clear, the GLCP master error signal is de-asserted.
31:2	RSVD	**Reserved.** These bits are hardwired to 0.
1	UNEXP_ADDR_ ERR_MASK	**Unexpected Address Error Mask.** Write 1 to mask UNEXP_ADDR_ERR_FLAG (bit 33) to prevent an unexpected address from generating an ERR.
0	UNEXP_TYPE_ ERR_MASK	**Unexpected Type Error Mask.** Write 1 to mask UNEXP_TYPE_ERR_FLAG (bit 32) to prevent an unexpected type from generating an ERR.

Downloaded from Arrow.com.

6.5.1.5 GLD Power Management MSR (IDE_GLD_MSR_PM)

MSR Address 51300004h
Type R/W
Reset Value 00000000_00000000h

IDE_GLD_MSR_PM Register Map

63	62	61	60	59	58	57	56	55	54	53	52	51	50	49	48	47	46	45	44	43	42	41	40	39	38	37	36	35	34	33	32
RSVD														IOMODEA		RSVD															
31	30	29	28	27	26	25	24	23	22	21	20	19	18	17	16	15	14	13	12	11	10	9	8	7	6	5	4	3	2	1	0
RSVD																															

IDE_GLD_MSR_PM Bit Descriptions

Bit	Name	Description
63:50	RSVD	**Reserved.** Returns 0 on read.
49:48	IOMODEA	**I/O Mode A Control.** These bits determine how the associated IDE inputs and outputs behave when the PMC asserts two internal signals that are controlled by PMS I/O Offset 20h and 0Ch. The list of affected signals is in Table 4-12 "Sleep Driven IDE Signals" on page 79. 00: No gating of I/O cells during a Sleep sequence (Default). 01: During a power management Sleep sequence, force inputs to their non-asserted state when PM_IN_SLPCTL is enabled. 10: During a power management Sleep sequence, force inputs to their non-asserted state when PM_IN_SLPCTL is enabled, and park (force) outputs low when PM_OUT_SLPCTL is enabled. 11: Immediately and unconditionally, force inputs to their not asserted state, and park (force) outputs low.
47:0	RSVD	**Reserved.** Returns 0 on read.

6.5.1.6 GLD Diagnostic MSR (IDE_GLD_MSR_DIAG)

MSR Address 51300005h
Type R/W
Reset Value 00000000_00000000h

This register is reserved for internal use by AMD and should not be written to.

Downloaded from Arrow.com.

6.5.2 IDE Controller Specific MSRs

6.5.2.1 IDE Controller Bus Master Control Registers Base Address (IDE_IO_BAR)

MSR Address 51300008h
Type R/W
Reset Value 00000000_0000CC01h

This register sets the base address of the I/O mapped bus mastering IDE and controller registers. Bits [3:0] are read only (001), indicating an 8-byte I/O address range.

IDE_IO_BAR Register Map

63	62	61	60	59	58	57	56	55	54	53	52	51	50	49	48	47	46	45	44	43	42	41	40	39	38	37	36	35	34	33	32
RSVD																															
31	30	29	28	27	26	25	24	23	22	21	20	19	18	17	16	15	14	13	12	11	10	9	8	7	6	5	4	3	2	1	0
BM_IDE_BAR																												ADD_RNG			

IDE_IO_BAR Bit Descriptions

Bit	Name	Description
63:32	RSVD	**Reserved.** Return 0 on read.
31:4	BM_IDE_BAR	**Bus Mastering IDE Base Address.** These bits form the base address of the IDE native register set.
3:0	ADD_RNG (RO)	**Address Range (Read Only).** Hard wired to 001. This indicates that the I/O base address is in units of bytes.

6.5.2.2 IDE Controller Configuration Register (IDE_CFG)

MSR Address 51300010h
Type R/W
Reset Value 00000000_00000000h

IDE_CFG Register Map

63	62	61	60	59	58	57	56	55	54	53	52	51	50	49	48	47	46	45	44	43	42	41	40	39	38	37	36	35	34	33	32
SPARE																															
31	30	29	28	27	26	25	24	23	22	21	20	19	18	17	16	15	14	13	12	11	10	9	8	7	6	5	4	3	2	1	0
RSVD														CABLE		SPARE	PWB	SPARE											RSVD	CHANEN	SPARE

Downloaded from Arrow.com.

IDE_CFG Bit Descriptions

Bit	Name	Description
63:32	SPARE	**Spare (Read Only).** These bits mirror the value of bits 31:0.
31:18	RSVD	**Reserved.** Set to 0. Return 0 on read.
17:16	CABLE	**CABLE.** These bits are intended to be programmed by BIOS to specify the cable type of each of the IDE drives to the driver software. 1 = high speed 80-pin cable is present. The bits specify the following drive: Bit 16: Primary master. Bit 17: Primary slave.
15	SPARE	**Spare.** This bit controls no hardware.
14	PWB	**Primary Post Write Buffer.** 1 = The primary port posted-write buffer for PIO modes is enabled.
13:3	SPARE	**Spare.** These bits control no hardware.
2	RSVD	**Reserved.**
1	CHANEN	**Channel Enable.** 0: The port of the IDE controller is disabled. 1: The port of the IDE controller is enabled.
0	SPARE	**Spare.** This bit controls no hardware.

6.5.2.3 IDE Controller Drive Timing Control Register (IDE_DTC)

MSR Address 51300012h
Type R/W
Reset Value A8A80000_A8A80000h

IDE_DTC Register Map

63	62	61	60	59	58	57	56	55	54	53	52	51	50	49	48	47	46	45	44	43	42	41	40	39	38	37	36	35	34	33	32
SPARE																															
31	30	29	28	27	26	25	24	23	22	21	20	19	18	17	16	15	14	13	12	11	10	9	8	7	6	5	4	3	2	1	0
PD0PW				PD0RT				PD1PW				PD1RT				SPARE															

IDE_DTC Bit Descriptions

Bit	Name	Description		
63:32	SPARE	**Spare (Read Only).** These bits mirror the value of bits [31:0].		
31:28	PD0PW	**Drive 0 Data DIOR_L/DIOW_L Active Pulse Width**. Note: The minimum time is limited by the cycle time. Due to the internal architecture, the minimum value for PIO 4 and MDMA 2 is 0010h.	Mode	Recommended Value
			PIO 0	1001
			PIO 1	0101
			PIO 2	0011
			PIO 3	0010
			PIO 4	0010
			MDMA 0	0110
			MDMA 1	0010
			MDMA 2	0010

Downloaded from Arrow.com.

IDE_DTC Bit Descriptions (Continued)

Bit	Name	Description		
27:24	PD0RT	**Drive 0 Data DIOR_L/DIOW_L Minimum Recovery Time**. Note: The minimum time is limited by the cycle time.	Mode	Recommended Value
			PIO 0	1000
			PIO 1	0101
			PIO 2	0010
			PIO 3	0001
			PIO 4	0000
			MDMA 0	0111
			MDMA 1	0001
			MDMA 2	0000
23:20	PD1PW	**Drive 1 Data DIOR_L/DIOW_L Active Pulse Width.**	See Bits 31:28 for recommended values.	
19:16	PD1RT	**Drive 1 Data DIOR_L/DIOW_L Minimum Recovery Time.**	See Bits 27:24 for recommended values.	
15:0	SPARE	**Spare.** These bits control no hardware.		
Note: This register specifies timing for PIO data transfers (1F0h) and multi-word DMA transfers. The value in each 4-bit field specifies the following time duration: $(2 \cdot [value] + 3) \cdot 15ns$				

6.5.2.4 IDE Controller Cycle Time and Address Setup Time Register (IDE_CAST)

MSR Address 51300013h
Type R/W
Reset Value FF0000F0_FF0000F0h

IDE_CAST Register Map

63	62	61	60	59	58	57	56	55	54	53	52	51	50	49	48	47	46	45	44	43	42	41	40	39	38	37	36	35	34	33	32
SPARE																															
31	30	29	28	27	26	25	24	23	22	21	20	19	18	17	16	15	14	13	12	11	10	9	8	7	6	5	4	3	2	1	0
PXPW				PXRT				SPARE								RSVD								P0ADD		P1ADD		SPARE			

IDE_CAST Bit Descriptions

Bit	Name	Description		
63:32	SPARE	**Spare (Read Only).** These bits mirror the value of bits [31:0].		
31:28	PXPW	**Command/Control DIOR_L/DIOW_L Active Pulse Width.** Note: Because the affect on performance is low, keep the default value. However the optimized value can also be used.	Mode	Optimized Value
			PIO 0	1001
			PIO 1	1001
			PIO 2	1001
			PIO 3	0010
			PIO 4	0010

Downloaded from Arrow.com.

IDE_CAST Bit Descriptions (Continued)

Bit	Name	Description		
27:24	PXRT	**Command/Control DIOR_L/DIOW_L Recovery Time.** Note: Because the affect on performance is low, keep the default value. However the optimized value can also be used.	Mode PIO 0 PIO 1 PIO 2 PIO 3 PIO 4	Optimized Value 1001 0010 0000 0010 0000
23:16	SPARE	**Spare.** These bits control no hardware.		
15:8	RSVD	**Reserved.** These bits are hardwired to 0.		
7:6	P0ADD	**Drive 0 Address Setup Time.**	Mode PIO 0 PIO 1 PIO 2 PIO 3 PIO 4	Recommended Value 10 01 00 00 00
5:4	P1ADD	**Drive 1 Address Setup Time.**	See bits 7:6 for recommended values.	
3:0	SPARE	**Spare.** These bits control no hardware.		

Note: For bits[7:4] the value in each 2-bit field specifies the following time duration: $(2 \cdot [value] + 3) \cdot 15ns$. This applies to all PIO cycles.
For bits [27:24] the value in each 4-bit field specifies the following time duration: $(2 \cdot [value] + 3) \cdot 15ns$;
For bits [31:28] the value in each 4-bit field specifies the following time duration: $(2 \cdot [value] + 2) \cdot 15ns$.
This applies to address ports 1F1h-1F7h and 3F6h.

6.5.2.5 IDE Controller UDMA Extended Timing Control Register (IDE_ETC)

MSR Address 51300014h
Type R/W
Reset Value 03030000_03030000h

IDE_ETC Register Map

63	62	61	60	59	58	57	56	55	54	53	52	51	50	49	48	47	46	45	44	43	42	41	40	39	38	37	36	35	34	33	32
SPARE																															
31	30	29	28	27	26	25	24	23	22	21	20	19	18	17	16	15	14	13	12	11	10	9	8	7	6	5	4	3	2	1	0
D0UDMAMODE	D0UDMAEN	RSVD			CYT0			D1UDMAMODE	D1UDMAEN	RSVD			CYT1			SPARE															

IDE_ETC Bit Descriptions

Bit	Name	Description
63:32	SPARE	**Spare (Read Only).** These bits mirror the value of bits [31:0].

Downloaded from Arrow.com.

IDE_ETC Bit Descriptions (Continued)

Bit	Name	Description
31	D0UDMAMODE	**Drive 0 UDMA Mode Enable Method.** 0: Enable UDMA by detecting the “Set Feature” ATA command. 1: Enable UDMA by setting D0UDMAEN (bit 30).
30	D0UDMAEN	**Drive 0 UDMA Mode Enable.** 0: Disable UDMA. 1: Enable UDMA.
29:27	RSVD	**Reserved.** These bits are hardwired to 0.
26:24	CYT0	**Drive 0 Cycle Time.** 000: UDMA mode 2 (ATA-33) 60 nanoseconds 001: UDMA mode 1 80 nanoseconds 010: UDMA mode 0 120 nanoseconds 011: Slow UDMA mode 0 150 nanoseconds 100: UDMA mode 3 (ATA-44) 45 nanoseconds 101: UDMA mode 4 (ATA-66) 30 nanoseconds 110: UDMA mode 5 (ATA-100) 30 nanoseconds 111: Reserved Reserved
23	D1UDMAMODE	**Drive 1 UDMA Mode Enable Method.** 0: Enable UDMA by detecting the “Set Feature” ATA command. 1: Enable UDMA by setting D1UDMAEN.
22	D1UDMAEN	**Drive 1 UDMA Mode Enable.** 1: Enable UDMA is enabled.
21:19	RSVD	**Reserved.** These bits are hardwired to 0.
18:16	CYT1	**Drive 1 Cycle Time.** 000: UDMA mode 2 (ATA-33) 60 nanoseconds 001: UDMA mode 1 80 nanoseconds 010: UDMA mode 0 120 nanoseconds 011: Slow UDMA mode 0 150 nanoseconds 100: UDMA mode 3 (ATA-44) 45 nanoseconds 101: UDMA mode 4 (ATA-66) 30 nanoseconds 110: UDMA mode 5 (ATA-100) 30 nanoseconds 111: Reserved Reserved
15:0	SPARE	**Spare.** These bits control no hardware.
Note: The CYT1 and CYT0 values define the cycle times for Ultra DMA data-out transfers. For Ultra DMA data-in transfers the minimum cycle times as defined in the ATA/ATAPI specification are supported.		

6.5.2.6 IDE Power Management Register (IDE_PM)

MSR Address 51300015h
Type R/W
Reset Value 00000000_00000000h

This register is reserved for internal use by AMD and should not be written to.

Downloaded from Arrow.com.

6.5.3 IDE Controller Native Registers

These registers are located in I/O space. The base address register is IDE_IO_BAR (Section 6.5.2.1 on page 336).

These registers comply with SFF-8038i for control of DMA transfers between drives and system memory.

6.5.3.1 Bus Master Command (IDE_BM_CMD)

IDE I/O Address 00h
Type R/W
Reset Value 00h

IDE_BM_CMD Register Map

7	6	5	4	3	2	1	0
RSVD				RWCTL	RSVD		BMCTL

IDE_BM_CMD Bit Descriptions

Bit	Name	Description
7:4	RSVD	**Reserved.** Set to 0. Return 0 on read.
3	RWCTL	**Read or Write Control.** Sets the direction of bus master transfers. 0: PCI reads performed. 1: PCI writes performed. This bit should not be changed when the bus master is active.
2:1	RSVD	**Reserved.** Set to 0. Return 0 on read.
0	BMCTL	**Bus Master Control.** Reads always return 0. Controls the state of the bus master. 0: Disable master. 1: Enable master. Note: Writes to 0 to discontinue DMA operation is not supported by the IDE Controller.

6.5.3.2 Bus Master Status (IDE_BM_STS)

IDE I/O Address 02h
Type R/W
Reset Value 00h

IDE_BM_STS Register Map

7	6	5	4	3	2	1	0
MODE	D1DMA	D0DMA	RSVD		BMINT	BMERR	BMSTS

Downloaded from Arrow.com.

IDE_BM_STS Bit Descriptions

Bit	Name	Description
7	MODE (RO)	**Simplex Mode (Read Only).** 0: Yes. 1: No (simplex mode).
6	D1DMA	**Drive 1 DMA Capable.** Allows Drive 1 to be capable of DMA transfers. 0: Disable. 1: Enable.
5	D0DMA	**Drive 0 DMA Capable.** Allows Drive 0 to be capable of DMA transfers. 0: Disable. 1: Enable.
4:3	RSVD	**Reserved**: Set to 0. Must return 0 on reads.
2	BMINT	**Bus Master Interrupt.** Read; set by hardware; write 1 to clear. This bit is set by the rising edge of the IDE interrupt line.
1	BMERR	**Bus Master Error.** Read; write 1 to clear. This bit is always 0.
0	BMSTS (RO)	**Bus Master Status (Read Only).** 0: Inactive. 1: Active.

6.5.3.3 Bus Master PRD Table Address - Primary (IDE_BM_PRD)

IDE I/O Address 04h
Type R/W
Reset Value 00000000h

IDE_BM_PRD Register Map

31	30	29	28	27	26	25	24	23	22	21	20	19	18	17	16	15	14	13	12	11	10	9	8	7	6	5	4	3	2	1	0
PRD_PNTR																														RSVD	

IDE_BM_PRD Bit Descriptions

Bit	Name	Description
31:2	PRD_PNTR	**Pointer to the Physical Region Descriptor Table.** This register is a PRD table pointer for IDE Bus Master 0. When written, this register points to the first entry in a PRD table. Once IDE Bus Master 0 is enabled (IDE I/O Address 00h[0] = 1), it loads the pointer and updates this register to the next PRD by adding 08h. When read, this register points to the next PRD.
1:0	RSVD	**Reserved.** This bits are hardwired to 0.

Downloaded from Arrow.com.

6.6 Diverse Integration Logic Register Descriptions

All registers associated with Diverse Integration Logic (DIVIL) are MSRs:

- Standard GeodeLink™ Device (GLD) MSRs
- DIVIL Specific MSRs

The MSRs are accessed via the RDMSR and WRMSR processor instructions. The MSR address is derived from the perspective of the CPU Core. See Section 4.2 "MSR Addressing" on page 60 for more details on MSR addressing.

All MSRs are 64 bits, however, some DIVIL MSRs are called out as 32 bits. The DIVIL (MDD) treats writes to the upper 32 bits (i.e., bits [63:32]) of the 32-bit MSRs as don't cares and always returns 0 on these bits.

The Standard GeodeLink Device MSRs are summarized in Table 6-20 and the DIVIL Specific MSRs are summarized in Table 6-21. The reference column in the tables point to the page where the register maps and bit descriptions are listed. Some notations in the reference column also point to other chapters. These MSRs are physically located in the DIVIL, but the descriptions are documented with the associated module and are listed here only for completeness.

Table 6-20. Standard GeodeLink™ Device MSRs Summary

MSR Address	Type	Register Name	Reset Value	Reference
51400000h	RO	GLD Capabilities MSR (DIVIL_GLD_MSR_CAP)	00000000_005DF5xxh	Page 348
51400001h	R/W	GLD Master Configuration MSR (DIVIL_GLD_MSR_CONFIG)	00000000_0000F000h	Page 348
51400002h	R/W	GLD SMI MSR (DIVIL_GLD_MSR_SMI)	00000000_00000000h	Page 349
51400003h	R/W	GLD Error MSR (DIVIL_GLD_MSR_ERROR)	00000000_00000000h	Page 352
51400004h	R/W	GLD Power Management MSR (DIVIL_GLD_MSR_PM)	00000000_00000000h	Page 354
51400005h	R/W	GLD Diagnostic MSR (DIVIL_GLD_MSR_DIAG)	00000000_00000000h	Page 355
51400006h-51400007h	R/W	DD Reserved MSRs (DD_MSR_RSVD) (Reads return 1; writes have no effect.)	FFFFFFFF_FFFFFFFFh	---

Table 6-21. DIVIL Specific MSRs Summary

MSR Address	Type	Register Name	Reset Value	Reference
51400008h	R/W	Local BAR - IRQ Mapper (DIVIL_LBAR_IRQ) I/O Space - Use of this LBAR is optional. IRQ Mapper is always accessible via MSR space.	00000000_00000000h	Page 356
51400009h	R/W	Local BAR - KEL from USB OHC Host Controller (DIVIL_LBAR_KEL) Memory Space. - Local Base Address Register for KEL registers.	00000000_00000000h	Page 356
5140000Bh	R/W	Local BAR - SMB (DIVIL_LBAR_SMB) I/O Space - Local Base Address Register for SMB Controller native registers.	00000000_00000000h	Page 357
5140000Ch	R/W	Local BAR - GPIO and ICFs (DIVIL_LBAR_GPIO) I/O Space - Local Base Address Register for GPIOs and ICFs.	00000000_00000000h	Page 358
5140000Dh	R/W	Local BAR - MFGPTs (DIVIL_LBAR_MFGPT) I/O Space - Local Base Address Register for MFGPTs.	00000000_00000000h	Page 359

Downloaded from Arrow.com.

Table 6-21. DIVIL Specific MSRs Summary (Continued)

MSR Address	Type	Register Name	Reset Value	Reference
5140000Eh	R/W	Local BAR - ACPI (DIVIL_LBAR_ACPI) I/O Space - Local Base Address Register for ACPI support.	00000000_00000000h	Page 360
5140000Fh	R/W	Local BAR - Power Management Support (DIVIL_LBAR_PMS) I/O Space - Local Base Address Register for Power Management Support registers.	00000000_00000000h	Page 361
51400010h	R/W	Local BAR - Flash Chip Select 0 (DIVIL_LBAR_FLSH0) Local Base Address Register for Flash Controller, Chip Select 0.	00000000_00000000h	Page 362
51400011h	R/W	Local BAR - Flash Chip Select 1 (DIVIL_LBAR_FLSH1) Local Base Address Register for Flash Controller, Chip Select 1.	00000000_00000000h	Page 362
51400012h	R/W	Local BAR - Flash Chip Select 2 (DIVIL_LBAR_FLSH2) Local Base Address Register for Flash Controller, Chip Select 2.	00000000_00000000h	Page 362
51400013h	R/W	Local BAR - Flash Chip Select 3 (DIVIL_LBAR_FLSH3) Local Base Address Register for Flash Controller, Chip Select 3.	00000000_00000000h	Page 362
51400014h	R/W	Legacy I/O Space Controls (DIVIL_LEG_IO) Legacy I/O space controls.	04000003h	Page 363
51400015h	R/W	Ball Options Control (DIVIL_BALL_OPTS) Controls IDE and LPC pin options.	00000x7xh	Page 365
51400016h	R/W	Soft IRQ (DIVIL_SOFT_IRQ) Software generated IRQ.	00000000h	Page 367
51400017h	R/W	Soft Reset (DIVIL_SOFT_RESET) Software generated RESET.	00000000h	Page 367
51400018h	R/W	NOR Flash Control (NORF_CTL)	00000000h	Page 550 (Flash spec)
51400019h	R/W	NOR Flash Timing for Chip Selects 0 and 1 (NORTF_T01)	07770777h	Page 552 (Flash spec)
5140001Ah	R/W	NOR Flash Timing for Chip Selects 2 and 3 (NORTF_T23)	07770777h	Page 553 (Flash spec)
5140001Bh	R/W	NAND Flash Data Timing MSR (NANDF_DATA)	07770777h	Page 554 (Flash spec)
5140001Ch	R/W	NAND Flash Control Timing (NANDF_CTL)	00000777h	Page 555 (Flash spec)
5140001Dh	R/W	Flash Reserved (NANDF_RSVD)	00000000h	Page 555 (Flash spec)
5140001Eh	R/W	Access Control DMA Request (DIVIL_AC_DMA)	00000000h	Page 368

Downloaded from Arrow.com.

Table 6-21. DIVIL Specific MSRs Summary (Continued)

MSR Address	Type	Register Name	Reset Value	Reference
5140001Fh	R/W	Keyboard Emulation Logic Control Register (KELX_CTL)	00000010h	Page 402 (KEL spec)
51400020h	R/W	IRQ Mapper Unrestricted Y and Z Select Low (PIC_[Y/Z]SEL_LOW)	00000000h	Page 380 (PIC spec)
51400021h	R/W	IRQ Mapper Unrestricted Y Select High (PIC_YSEL_HIGH)	00000000h	Page 381 (PIC spec)
51400022h	R/W	IRQ Mapper Unrestricted Z Select Low (PIC_ZSEL_LOW)	00000000h	Page 380 (PIC spec)
51400023h	R/W	IRQ Mapper Unrestricted Z Select High (PIC_ZSEL_HIGH)	00000000h	Page 381 (PIC spec)
51400024h	R/W	IRQ Mapper Primary Mask (PIC_IRQM_PRIM)	0000FFFFh	Page 382 (PIC spec)
51400025h	R/W	IRQ Mapper LPC Mask (PIC_IRQM_LPC)	00000000h	Page 382 (PIC spec)
51400026h	RO	IRQ Mapper Extended Interrupt Request Status Low (PIC_XIRR_STS_LOW)	xxxxxxxxh	Page 383 (PIC spec)
51400027h	RO	IRQ Mapper Extended Interrupt Request Status High (PIC_XIRR_STS_HIGH)	xxxxxxxxh	Page 384 (PIC spec)
51400028h	R/W	MFGPT IRQ Mask (MFGPT_IRQ)	00000000h	Page 514 (MFGPT spec)
51400029h	R/W	MFGPT NMI and Reset Mask (MFGPT_NR)	00000000h	Page 517 (MFGPT spec)
5140002Ah	R/W	MFGPT Reserved (MFGPT_RSVD)	00000000h	Page 518 (MFGPT spec)
5140002Bh	WO	MFGPT Clear Setup Test (MFGPT_SETUP)	00000000h	Page 518 (MFGPT spec)
5140002Ch -5140002Fh	R/W	Reserved. Reads return 1. Writes have no effect.	FFFFFFFFh	---
51400030h	RO	Floppy Port 3F2h Shadow (FLPY_3F2_SHDW)	xxh	Page 369 (Floppy spec)
51400031h	RO	Floppy Port 3F7h Shadow (FLPY_3F7_SHDW)	xxh	Page 369 (Floppy spec)
51400032h	RO	Floppy Port 372h Shadow (FLPY_372_SHDW)	xxh	Page 370 (Floppy spec)
51400033h	RO	Floppy Port 377h Shadow (FLPY_377_SHDW)	xxh	Page 370 (Floppy spec)
51400034h	RO	PIC Shadow (PIC_SHDW)	xxh	Page 384 (PIC spec)
51400035h	R/W	Reserved. Reads return 1. Writes have no effect.	FFFFFFFFh	---
51400036h	RO	PIT Shadow (PIT_SHDW)	00h	Page 372 (PIT spec)
51400037h	R/W	PIT Count Enable (PIT_CNTRL)	03h	Page 372 (PIT spec)
51400038h	R/W	UART1 Primary Dongle and Modem Interface (UART[1]_MOD)	0xh	Page 410 (UART spec)

Downloaded from Arrow.com.

Table 6-21. DIVIL Specific MSRs Summary (Continued)

MSR Address	Type	Register Name	Reset Value	Reference
51400039h	R/W	UART1 Secondary Dongle and Status (UART[1]_DONG)	xxh	Page 411 (UART spec)
5140003Ah	R/W	UART1 Interface Configuration (UART[1]_CONF)	00h	Page 412 (UART spec)
5140003Bh	R/W	UART1 Reserved MSR (UART1_RSVD_MSR) - Reads return 1; writes have no effect.	11h	---
5140003Ch	R/W	UART2 Primary Dongle and Modem Interface (UART[2]_MOD)	0xh	Page 410 (UART spec)
5140003Dh	R/W	UART2 Secondary Dongle and Status (UART[2]_DONG)	xxh	Page 411 (UART spec)
5140003Eh	R/W	UART2 Interface Configuration (UART[2]_CONF)	00h	Page 412 (UART spec)
5140003Fh	R/W	UART2 Reserved MSR (UART2_RSVD_MSR) - Reads return 1; writes have no effect.	11h	---
51400040h	R/W	DMA Mapper (DMA_MAP)	0000h	Page 450 (DMA spec)
51400041h	RO	DMA Shadow Channel 0 Mode (DMA_SHDW_CH0)	00xxh	Page 451 (DMA spec)
51400042	RO	DMA Shadow Channel 1 Mode (DMA_SHDW_CH1)	00xxh	Page 451 (DMA spec)
51400043	RO	DMA Shadow Channel 2 Mode (DMA_SHDW_CH2)	00xxh	Page 451 (DMA spec)
51400044	RO	DMA Shadow Channel 3 Mode (DMA_SHDW_CH3)	00xxh	Page 451 (DMA spec)
51400045h	RO	DMA Shadow Channel 4 Mode (DMA_SHDW_CH4]	00xxh	Page 451 (DMA spec)
51400046h	RO	DMA Shadow Channel 5 Mode (DMA_SHDW_CH5)	00xxh	Page 451 (DMA spec)
51400047h	RO	DMA Shadow Channel 6 Mode (DMA_SHDW_CH6)	00xxh	Page 451 (DMA spec)
51400048h	RO	DMA Shadow Channel 7 Mode (DMA_SHDW_CH7)	00xxh	Page 451 (DMA spec)
51400049h	RO	DMA Shadow Mask (DMA_MSK_SHDW)	00FFh	Page 452 (DMA spec)
5140024Ah	R/W	Reserved MSR (RSVD_MSR) - Reads return 1; writes have no effect.	11h	---
5140024Bh	R/W	Reserved MSR (RSVD_MSR) - Reads return 1; writes have no effect.	11h	---
5140004Ch	RO	LPC Address Error (LPC_EADDR)	00000000h	Page 466 (LPC spec)
5140004Dh	RO	LPC Error Status (LPC_ESTAT)	00000000h	Page 467 (LPC spec)
5140004Eh	R/W	LPC Serial IRQ Control (LPC_SIRQ)	00000000h	Page 467 (LPC spec)
5140004Fh	R/W	LPC Reserved (LPC_RSVD)	00000000h	Page 468 (LPC spec)

Downloaded from Arrow.com.

Table 6-21. DIVIL Specific MSRs Summary (Continued)

MSR Address	Type	Register Name	Reset Value	Reference
51400050h	R/W	PMC Logic Timer (PMC_LTMR)	00000000h	Page 526 (PMC spec)
51400051h	R/W	PMC Reserved (PMC_RSVD)	00000000h	Page 526 (PMC spec)
51400052h-51400053h	R/W	Reserved MSR (RSVD_MSR) - Reads return 1; writes have no effect.	11h	---
51400054h	R/W	RTC RAM Lock (RTC_RAM_LOCK)	00h	Page 470 (RTC spec)
51400055h	R/W	RTC Date of Month Alarm Offset (RTC_DOMA_OFFSET)	00h	Page 470 (RTC spec)
51400056h	R/W	RTC Month Alarm Offset (RTC_MONA_OFFSET)	00h	Page 471 (RTC spec)
51400057h	R/W	RTC Century Offset (RTC_CEN_OFFSET)	00h	Page 471 (RTC spec)
51400058h-514000FFh	R/W	Reserved MSR (RSVD_MSR) - Reads return 1; writes have no effect.	11h	---

Downloaded from Arrow.com.

6.6.1 Standard GeodeLink™ Device (GLD) MSRs

6.6.1.1 GLD Capabilities MSR (DIVIL_GLD_MSR_CAP)

MSR Address 51400000h
Type RO
Reset Value 00000000_005DF5xxh

DIVIL_GLD_MSR_CAP Register Map

63	62	61	60	59	58	57	56	55	54	53	52	51	50	49	48	47	46	45	44	43	42	41	40	39	38	37	36	35	34	33	32
RSVD																															
31	30	29	28	27	26	25	24	23	22	21	20	19	18	17	16	15	14	13	12	11	10	9	8	7	6	5	4	3	2	1	0
RSVD								DEV_ID																REV_ID							

DIVIL_GLD_MSR_CAP Bit Descriptions

Bit	Name	Description
63:24	RSVD	**Reserved.** Reads return 0.
23:8	DEV_ID	**Device ID.** Identifies module.
7:0	REV_ID	**Revision ID.** Identifies module revision. See *AMD Geode™ CS5536 Companion Device Specification Update* document for value.

6.6.1.2 GLD Master Configuration MSR (DIVIL_GLD_MSR_CONFIG)

MSR Address 51400001h
Type R/W
Reset Value 00000000_0000F000h

DIVIL_GLD_MSR_CONFIG Register Map

63	62	61	60	59	58	57	56	55	54	53	52	51	50	49	48	47	46	45	44	43	42	41	40	39	38	37	36	35	34	33	32
RSVD																															
31	30	29	28	27	26	25	24	23	22	21	20	19	18	17	16	15	14	13	12	11	10	9	8	7	6	5	4	3	2	1	0
RSVD													FIX_PREFETCH			DISCARD		NON_COH_WR	NON_COH_RD	RSVD				PRI			RSVD	PID		

DIVIL_GLD_MSR_CONFIG Bit Descriptions

Bit	Name	Description
63:19	RSVD	**Reserved.** Reads return 0. Writes have no effect.
18:16	FIX_PREFETCH	**Fixed Read Prefetch Policy.** 000: None. Each read takes a complete trip to memory. 001: Initial read 08 bytes. Read next 8 only when requested. 010: Initial read 16 bytes. Read next 16 only when requested. 011: Initial read 32 bytes. Read next 32 only when requested. 100: Initial read 32 bytes. Read next 32 when 16 bytes left. 101, 110, and 111: Reserved.

Downloaded from Arrow.com.

DIVIL_GLD_MSR_CONFIG Bit Descriptions (Continued)

Bit	Name	Description
15:14	DISCARD	**Read Prefetch Discard Policy.** 00: Reserved. 01: Discard all data not taken under current local bus grant. 10: Discard all data on any local bus transaction. 11: Discard all data on any local bus write transaction. Always use this value.
13	NON_COH_WR	**Non-Coherent Write.** 0: Write requests are coherent. 1: Write requests are non-coherent. Always use this value.
12	NON_COH_RD	**Non-Coherent Read.** 0: Read requests are coherent. 1: Read requests are non-coherent. Always use this value.
11:7	RSVD	**Reserved.** Reads as 0.
6:4	PRI	**Priority Level.** Always write 0.
3	RSVD (RO)	**Reserved (Read Only).** Returns 0.
2:0	PID	**Priority ID.** Always write 0.

6.6.1.3 GLD SMI MSR (DIVIL_GLD_MSR_SMI)

MSR Address 51400002h
Type R/W
Reset Value 00000000_00000000h

The flags are set by internal conditions. The internal conditions are enabled if the EN bit is 1. Reading the FLAG bit returns the value; writing 1 clears the flag; writing 0 has no effect. (See Section 4.7.3 "MSR Address 2: SMI Control" on page 74 for further SMI/ASMI generation details.)

DIVIL_GLD_MSR_SMI Register Map

63	62	61	60	59	58	57	56	55	54	53	52	51	50	49	48	47	46	45	44	43	42	41	40	39	38	37	36	35	34	33	32
RSVD																PM1_CNT_SSMI_FLAG	PM2_CNT_SSMI_FLAG	KEL_A20_ASMI_FLAG	DMA_SSMI_FLAG	LPC_SSMI_FLAG	RSVD	UART2_SSMI_FLAG	UART1_SSMI_FLAG	PORTA_INIT_ASMI_FLAG	PORTA_A20_ASMI_FLAG	KEL_INIT_ASMI_FLAG	PM_ASMI_FLAG	PIC_ASMI_FLAG	KEL_EE_ASMI_FLAG	SHTDWN_ASMI_FLAG	HLT_ASMI_FLAG
31	**30**	**29**	**28**	**27**	**26**	**25**	**24**	**23**	**22**	**21**	**20**	**19**	**18**	**17**	**16**	**15**	**14**	**13**	**12**	**11**	**10**	**9**	**8**	**7**	**6**	**5**	**4**	**3**	**2**	**1**	**0**
RSVD																PM1_CNT_SSMI_EN	PM2_CNT_SSMI_EN	KEL_A20_ASMI_EN	DMA_SSMI_EN	LPC_SSMI_EN	RSVD	UART2_SSMI_EN	UART1_SSMI_EN	PORTA_INIT_ASMI_EN	PORTA_A20_ASMI_EN	KEL_INIT_ASMI_EN	PM_ASMI_EN	PIC_ASMI_EN	KEL_EE_ASMI_EN	SHTDWN_ASMI_EN	HLT_ASMI_EN

Downloaded from Arrow.com.

DIVIL_GLD_MSR_SMI Bit Descriptions

Bit	Name	Description
63:48	RSVD	**Reserved.** Reads return 0. Writes have no effect.
47	PM1_CNT_SSMI_FLAG	**Power Management 1 Control Register SSMI Flag.** If high, records that an SSMI was generated on a write to PM1_CNT (PMC ACPI I/O Offset 08h). Write 1 to clear; writing 0 has no effect. PM1_CNT_SSMI_EN (bit 15) must be high to generate SSMI and set flag.
46	PM2_CNT_SSMI_FLAG	**Power Management 2 Control Register SSMI Flag.** If high, records that an SSMI was generated on a write to PM2_CNT (PMC ACPI I/O Offset 0Ch). Write 1 to clear; writing 0 has no effect. PM2_CNT_SSMI_EN (bit 14) must be high to generate SSMI and set flag.
45	KEL_A20_ASMI_FLAG	**KEL Gate A20 ASMI Flag.** If high, records that an ASMI was generated in the KEL due to keyboard gate A20 signal change. Write 1 to clear; writing 0 has no effect. KELA20_ASMI_EN (bit 13) must be high to generate ASMI and set flag.
44	DMA_SSMI_FLAG	**DMA SSMI Flag.** If high, records that an SSMI was generated on the 8237 controllers during DMA. Write 1 to clear; writing 0 has no effect. DMA_SSMI_EN (bit 12) must be high to generate SSMI and set flag. (Also see Section 6.6.2.13 "Access Control DMA Request (DIVIL_AC_DMA)" on page 368.)
43	LPC_SSMI_FLAG	**LPC SSMI Flag.** If high, records that an SSMI was generated on the LPC during DMA. Write 1 to clear; writing 0 has no effect. LPC_SSMI_EN (bit 11) must be high to generate SSMI and set flag. (Also see Section 6.6.2.13 "Access Control DMA Request (DIVIL_AC_DMA)" on page 368.)
42	RSVD	**Reserved.** Reads return 0. Writes have no effect.
41	UART2_SSMI_FLAG	**UART2 SSMI Flag.** If high, records that an SSMI was generated on UART2 during DMA. Write 1 to clear; writing 0 has no effect. UART2_SSMI_EN (bit 9) must be high to generate SSMI and set flag. (Also see Section 6.6.2.13 "Access Control DMA Request (DIVIL_AC_DMA)" on page 368.)
40	UART1_SSMI_FLAG	**UART1 SSMI Flag.** If high, records that an SSMI was generated on UART1 during DMA. Write 1 to clear; writing 0 has no effect. UART1_SSMI_EN (bit 8) must be high to generate SSMI and set flag. (Also see Section 6.6.2.13 "Access Control DMA Request (DIVIL_AC_DMA)" on page 368.)
39	PORTA_INIT_ASMI_FLAG	**Port A INIT ASMI Flag.** If high, records that an ASMI was generated in the KEL due to an INIT on Port A (092h). Write 1 to clear; writing 0 has no effect. PORTA_INIT_ASMI_EN (bit 7) must be high to generate ASMI and set flag.
38	PORTA_A20_ASMI_FLAG	**Port A A20 ASMI Flag.** If high, records that an ASMI was generated in the KEL due to a A20 change on Port A (092h). Write 1 to clear; writing 0 has no effect. PORTA_A20_ASMI_EN (bit 6) must be high to generate ASMI and set flag.
37	KEL_INIT_ASMI_FLAG	**KEL INIT ASMI Flag.** If high, records that an ASMI was generated in the KEL due to a keyboard INIT sequence. Write 1 to clear; writing 0 has no effect. KEL_INIT_ASMI_EN (bit 5) must be high to generate ASMI and set flag.
36	PM_ASMI_FLAG	**Power Management ASMI Flag.** If high, records that an ASMI was generated in the Power Management Logic. Write 1 to clear; writing 0 has no effect. PM_ASMI_EN (bit 4) must be high to generate ASMI and set flag.
35	PIC_ASMI_FLAG	**PIC ASMI Flag.** If high, records that an ASMI was generated in the Extended PIC Mapper. Write 1 to clear; writing 0 has no effect. PIC_ASMI_EN (bit 3) must be high to generate ASMI and set flag.
34	KEL_EE_ASMI_FLAG	**KEL Emulation Event ASMI Flag.** If high, records that an ASMI was generated in the KEL due to a KEL emulation event. Write 1 to clear; writing 0 has no effect. KEL_EE_ASMI_EN (bit 2) must be high to generate ASMI and set flag.
33	SHTDWN_ASMI_FLAG	**Shutdown ASMI Flag.** If high, records that an ASMI was generated on a Shutdown special cycle. Write 1 to clear; writing 0 has no effect. SHTDWN_ASMI_EN (bit 1) must be high to generate ASMI and set flag.

Downloaded from Arrow.com.

DIVIL_GLD_MSR_SMI Bit Descriptions (Continued)

Bit	Name	Description
32	HLT_ASMI_FLAG	**Halt ASMI Flag.** If high, records that an ASMI was generated on a Halt special cycle. Write 1 to clear; writing 0 has no effect. HLT_ASMI_EN (bit 0) must be high to generate an ASMI and set flag.
31:16	RSVD	**Reserved.** Reads return 0. Writes have no effect.
15	PM1_CNT_SSMI_EN	**Power Management 1 Control Register SSMI Enable.** Write 1 to enable PM1_CNT_SSMI_FLAG (bit 47) and to allow writes to PM1_CNT (PMC ACPI I/O Offset 08h) to generate an SSMI.
14	PM2_CNT_SSMI_EN	**Power Management 2 Control Register SSMI Enable.** Write 1 to enable PM2_CNT_SSMI_FLAG (bit 46) and to allow writes to PM2_CNT (PMC ACPI I/O Offset 0Ch) to generate an SSMI.
13	KEL_A20_ASMI_EN	**KEL Gate A20 ASMI Enable.** Write 1 to enable KEL_A20_ASMI_FLAG (bit 45) and to allow a keyboard gate A20 signal change in the KEL to generate an ASMI.
12	DMA_SSMI_EN	**DMA SSMI Enable.** Write 1 to enable DMA_SSMI_FLAG (bit 44) and to allow 8237s during DMA to generate an SSMI.
11	LPC_SSMI_EN	**LPC SSMI Enable.** Write 1 to enable LPC_SSMI_FLAG (bit 43) and to allow the LPC to generate an SSMI.
10	RSVD	**Reserved.** Reads return 0. Writes have no effect.
9	UART2_SSMI_EN	**UART2 SSMI Enable.** Write 1 to enable UART2_SSMI_FLAG (bit 41) and to allow UART2 to generate an SSMI.
8	UART1_SSMI_EN	**UART1 SSMI Enable.** Write 1 to enable UART1_SSMI_FLAG (bit 40) and to allow UART1 to generate an SSMI.
7	PORTA_INIT_ASMI_EN	**Port A INIT ASMI Enable.** Write 1 to enable PORTA_INIT_ASMI_FLAG (bit 39) and to allow an INIT on Port A in the KEL to generate an ASMI.
6	PORTA_A20_ASMI_EN	**Port A A20 ASMI Enable.** Write 1 to enable PORTA_A20_ASMI_FLAG (bit 38) and to allow an A20 change on Port A in the KEL to generate an ASMI.
5	KEL_INIT_ASMI_EN	**KEL INIT ASMI Enable.** Write 1 to enable KEL_INIT_ASMI_FLAG (bit 37) and to allow a keyboard INIT sequence in the KEL to generate an ASMI.
4	PM_ASMI_EN	**Power Management ASMI Enable.** Write 1 to enable PM_ASMI_FLAG (bit 36) and to allow the Power Management Logic to generate an ASMI.
3	PIC_ASMI_EN	**PIC ASMI Enable.** Write 1 to enable PIC_ASMI_FLAG (bit 35) and to allow the Extended PIC Mapper to generate an ASMI.
2	KEL_EE_ASMI_EN	**KEL Emulation Event ASMI Enable.** Write 1 to enable KEL_EE_ASMI_FLAG (bit 34) and to allow the KEL to generate an ASMI.
1	SHTDWN_ASMI_EN	**Shutdown ASMI Enable.** Write 1 to enable SHTDWN_ASMI_FLAG (bit 33) and to allow a Shutdown special cycle to generate an ASMI.
0	HLT_ASMI_EN	**Halt ASMI Enable.** Write 1 to enable HLT_ASMI_FLAG (bit 32) and to allow a Halt special cycle to generate an ASMI.

Downloaded from Arrow.com.

6.6.1.4 GLD Error MSR (DIVIL_GLD_MSR_ERROR)

MSR Address 51400003h
Type R/W
Reset Value 00000000_00000000h

The flags are set by internal conditions. The internal conditions are enabled if the EN bit is 1. Reading the FLAG bit returns the value; writing 1 clears the flag; writing 0 has no effect. (See Section 4.7.4 "MSR Address 3: Error Control" on page 78 for further on ERR generation details.)

DIVIL_GLD_MSR_ERROR Register Map

63	62	61	60	59	58	57	56	55	54	53	52	51	50	49	48	47	46	45	44	43	42	41	40	39	38	37	36	35	34	33	32
RSVD									UART1XUART2_ERR_FLAG	MEM_LBAR_DECODE_ERR_FLAG	IO_LBAR_DECODE_ERR_FLAG	RSVD				SHTDWN_ERR_FLAG	NAND_DIST_ERR_FLAG	RSVD	DMA_DMA_ERR_FLAG	LPC_DMA_ERR_FLAG	RSVD	UART2_DMA_ERR_FLAG	UART1_DMA_ERR_FLAG	RSVD		LPC_MAST_ERR_FLAG	LPC_SLV_ERR_FLAG	MAST_RESP_EXCEP_FLAG	REPEAT_SSMI_ERR_FLAG	DECODE_ERR_FLAG	LB_ADAP_BAD_FLAG
31	**30**	**29**	**28**	**27**	**26**	**25**	**24**	**23**	**22**	**21**	**20**	**19**	**18**	**17**	**16**	**15**	**14**	**13**	**12**	**11**	**10**	**9**	**8**	**7**	**6**	**5**	**4**	**3**	**2**	**1**	**0**
RSVD															LPC_EXCP_EN	SHTDWN_ERR_EN	NAND_DIST_ERR_EN	RSVD	DMA_DMA_ERR_EN	LPC_DMA_ERR_EN	RSVD	UART2__DMA_ERR_EN	UART1_DMA_ERR_EN	RSVD		LPC_MAST_ERR_EN	LPC_SLV_ERR_EN	MAST_RESP_EXCEP_EN	REPEAT_SSMI_ERR_EN	DECODE_ERR_EN	LB_ADAP_BAD_EN

DIVIL_GLD_MSR_ERROR Bit Descriptions

Bit	Name	Description
63:55	RSVD	**Reserved.** Reads return 0. Writes have no effect.
54	UART1XUART2_ ERR_FLAG	**UART1 and UART2 Error Flag.** If high, records that an ERR was generated due to a collision between the two UARTs. UART1 and UART2 are set to the same I/O address base. No chip selects are asserted and DECODE_ERR_FLAG (bit 33) is asserted. DECODE_ERR_EN (bit 1) must be high to generate ERR and set flag. Write 1 to clear; writing 0 has no effect.
53	MEM_LBAR_ DECODE_ ERR_FLAG	**Memory LBAR Decode Error Flag.** If high, records that an ERR was generated due to a collision between one memory LBAR and another memory LBAR hit. In this case, NO chip select is generated and DECODE_ERR_FLAG (bit 33) is asserted. DECODE_ERR_EN (bit 1) must be high to generate ERR and set flag. Write 1 to clear; writing 0 has no effect.
52	IO_LBAR_ DECODE_ERR_ FLAG	**I/O LBAR Decode Error Flag.** If high, records that an ERR was generated due to a collision between one I/O LBAR and another I/O LBAR hit. In this case, NO chip select is generated and DECODE_ERR_FLAG (bit 33) is asserted.DECODE_ERR_EN (bit 1) must be high to generate ERR and set flag. Write 1 to clear; writing 0 has no effect.
51:48	RSVD	**Reserved.** Reads return 0. Writes have no effect.
47	SHTDWN_ ERR_FLAG	**Shutdown Error Flag.** If high, records that an ERR was generated due to a Shutdown cycle occurrence. SHTDWN_ERR_EN (bit 15) must be high to generate ERR and set flag. Write 1 to clear; writing 0 has no effect.

Downloaded from Arrow.com.

DIVIL_GLD_MSR_ERROR Bit Descriptions (Continued)

Bit	Name	Description
46	NAND_DIST_ ERR_FLAG	**NAND Distract Error Flag.** If high, records that an ERR was generated due to a NAND distract error. NAND_DIST_ERR_EN (bit 14) must be high to generate ERR and set flag. Write 1 to clear; writing 0 has no effect.
45	RSVD	**Reserved.** Reads return 0. Writes have no effect.
44	DMA_DMA_ ERR_FLAG	**8237 DMA Error Flag.** If high, records that an ERR was generated due to an access on the 8237s during DMA. DMA_DMA_ERR_EN (bit 12) must be high to generate ERR and set flag. Write 1 to clear; writing 0 has no effect.
43	LPC_DMA_ ERR_FLAG	**LPC DMA Error Flag.** If high, records that an ERR was generated due to an LPC access during DMA. LPC_DMA_ERR_EN (bit 11) must be high to generate ERR and set flag. Write 1 to clear; writing 0 has no effect.
42	RSVD	**Reserved.** Reads return 0. Writes have no effect.
41	UART2_DMA_ ERR_FLAG	**UART2 DMA Error Flag.** If high, records that an ERR was generated due to a UART2 access during DMA. UART2_DMA_ERR_EN (bit 9) must be high to generate ERR and set flag. Write 1 to clear; writing 0 has no effect.
40	UART1_DMA_ ERR_FLAG	**UART1 DMA Error Flag.** If high, records that an ERR was generated due to a UART1 access during DMA. UART1_DMA_ERR_EN (bit 8) must be high to generate ERR and set flag. Write 1 to clear; writing 0 has no effect.
39:38	RSVD	**Reserved.** Reads return 0. Writes have no effect.
37	LPC_MAST_ ERR_FLAG	**LPC Master Error Flag.** If high, records that an ERR was generated on the LPC due to a Master <=> GeodeLink Adapter transaction. LPC_MAST_ERR_EN (bit 5) must be high to generate ERR and set flag. Write 1 to clear; writing 0 has no effect.
36	LPC_SLV_ ERR_FLAG	**LPC Slave Error Flag.** If high, records that an ERR was generated on the LPC due to a Slave <=> GeodeLink Adapter transaction. LPC_SLV_ERR_EN (bit 4) must be high to generate ERR and set flag. Write 1 to clear; writing 0 has no effect.
35	MAST_RESP_ EXCEP_FLAG	**Master Response Exception Flag.** If high, records that an ERR was generated due to the GeodeLink Adapter detecting the EXCEP bit set in a local bus master response packet. MAST_RESP_EXCP_EN (bit 3) must be high to generate ERR and set flag. Write 1 to clear; writing 0 has no effect.
34	REPEAT_SSMI_ ERR_FLAG	**Repeat SSMI Error Flag.** If high, records that an ERR was generated due to a second SSMI occurring on an address before the first was cleared. REPEAT_SSMI_ERR_EN (bit 2) must be high to generate ERR and set flag. Write 1 to clear; writing 0 has no effect.
33	DECODE_ERR_ FLAG	**Decode Error Flag.** If high, records that an ERR was generated during the address decode cycle due to one or more devices being decoded to the same address. Bits [54:52] record further information about this type of error. DECODE_ERR_EN (bit 1) must be high to generate ERR and set flag. Write 1 to clear; writing 0 has no effect.
32	LB_ADAP_BAD_ FLAG	**LBus Adapter Bad Flag.** If high, records that an ERR was generated due to the GeodeLink Adapter detected an error at the GeodeLink interface (e.g., packet type not supported). LB_ADAP_BAD_EN (bit 0) must be high to generate ERR and set flag. Write 1 to clear; writing 0 has no effect.
31:17	RSVD	**Reserved.** Reads return 0. Writes have no effect.
16	LPC_EXCP_EN	**LPC Exception Enable.** Write 1 to enable EXCEP bit in response packet for LPC address errors.
15	SHTDWN_ ERR_EN	**Shutdown Error Enable.** Write 1 to enable SHTDWN_ERR_FLAG (bit 47) and to allow a Shutdown cycle to generate an ERR.
14	NAND_DIST_ ERR_EN	**NAND Distract Error Enable.** Write 1 to enable NAND_DIST_ERR_FLAG (bit 46) and to allow a NAND distract error to generate an ERR.
13	RSVD	**Reserved.** Reads return 0. Writes have no effect.

Downloaded from Arrow.com.

DIVIL_GLD_MSR_ERROR Bit Descriptions (Continued)

Bit	Name	Description
12	DMA_DMA_ ERR_EN	**8237 DMA Error Enable.** Write 1 to enable DMA_DMA_ERR_FLAG (bit 44) and to allow an access on the 8237s during DMA to generate an ERR.
11	LPC_DMA_ ERR_EN	**LPC DMA Error Enable.** Write 1 to enable LPC_DMA_ERR_FLAG (bit 43) and to allow an LPC access during DMA an LPC access during DMA to generate an ERR.
10	RSVD	**Reserved.** Reads return 0. Writes have no effect.
9	UART2_DMA_ ERR_EN	**UART2 DMA Error Enable.** Write 1 to enable UART2_DMA_ERR_FLAG (bit 41) and to allow UART2 accesses during DMA to generate an ERR.
8	UART1_DMA _ERR_EN	**UART1 DMA Error Enable.** Write 1 to enable UART1_DMA_ERR_FLAG (bit 40) and to allow UART1 accesses during DMA to generate an ERR.
7:6	RSVD	**Reserved.** Reads return 0. Writes have no effect.
5	LPC_MAST_ ERR_EN	**LPC Master Error Enable.** Write 1 to enable LPC_MAST_ERR_FLAG (bit 37) and to allow Master <=> GeodeLink Adapter transactions to generate an ERR.
4	LPC_SLV_ ERR_EN	**LPC Slave Error Enable.** Write 1 to enable LPC_SLV_ERR_FLAG (bit 36) and to allow Slave <=> GeodeLink Adapter transactions to generate an ERR.
3	MAST_RESP_ EXCEP_EN	**Master Response Exception Enable.** Write 1 to enable MAST_RESP_EXCEP_FLAG (bit 35) and to allow when the GeodeLink Adapter detects the EXCEP bit set in a local bus master response packet to generate an ERR.
2	REPEAT_SSMI_ ERR_EN	**Repeat SSMI Error Enable.** Write 1 to enable REPEAT_SSMI_ERR_FLAG (bit 34) and to allow when a second SSMI occurs on an address before the first was cleared to generate an ERR.
1	DECODE_ ERR_EN	**Decode Error Enable.** Write 1 to enable FLAG bits [54:52] and to allow when one or more devices are decoded to the same address during the address decode cycle to generate an ERR.
0	LB_ADAP_ BAD_EN	**LBus Adapter Bad Enable.** Write 1 to enable LB_ADAP_BAD_FLAG (bit 32) and to allow when the GeodeLink Adapter detects an error at the GeodeLink interface to generate an ERR.

6.6.1.5 GLD Power Management MSR (DIVIL_GLD_MSR_PM)

MSR Address 51400004h
Type R/W
Reset Value 00000000_00000000h

DIVIL_GLD_MSR_PM Register Map

63	62	61	60	59	58	57	56	55	54	53	52	51	50	49	48	47	46	45	44	43	42	41	40	39	38	37	36	35	34	33	32
RSVD																															
31	30	29	28	27	26	25	24	23	22	21	20	19	18	17	16	15	14	13	12	11	10	9	8	7	6	5	4	3	2	1	0
PMODE15		PMODE14		RSVD				PMODE11		PMODE10		PMODE9		PMODE8		PMODE7		PMODE6		PMODE5		PMODE4		RSVD		PMODE2		PMODE1		PMODE0	

DIVIL_GLD_MSR_PM Bit Descriptions

Bit	Name	Description
63:48	RSVD	**Reserved.** Reads return 0. Writes have no effect.
47:46	RSVD	**Reserved.** Do not write. Reads return 0.
45:44	RSVD	**Reserved.** Reads return 0. Writes have no effect.

Downloaded from Arrow.com.

DIVIL_GLD_MSR_PM Bit Descriptions (Continued)

Bit	Name	Description
43:36	RSVD	**Reserved.** Do not write. Reads return 0.
35	RSVD	**Reserved.** Reads return 0. Writes have no effect.
34:32	RSVD	**Reserved.** Do not write. Reads return 0.
31:30	PMODE15	**Power Mode for GPIO Standby Power Domain 32 KHz Clock Domain.** 00: Disable clock gating. Clocks are always on. 01: Enable active hardware clock gating. Clock goes off whenever this module's circuits are not busy. 10: Reserved. 11: Reserved.
29:28	PMODE14	**Power Mode for GPIO Working Power Domain 32 KHz Clock Domain.** See bits [31:30] for decode.
27:24	RSVD	**Reserved.** Reads return the value written.
23:22	PMODE11	**Power Mode for MFGPT Standby Power Domain 32 KHz Clock Domain.** See bits [31:30] for decode.
21:20	PMODE10	**Power Mode for MFGPT Working Power Domain 32 KHz Clock Domain.** See bits [31:30] for decode.
19:18	PMODE9	**Power Mode for MFGPT Working power domain 14 MHz Clock Domain.** See bits [31:30] for decode.
17:16	PMODE8	**Power Mode for LPC.** See bits [31:30] for decode.
15:14	PMODE7	**Power Mode for UART2.** See bits [31:30] for decode.
13:12	PMODE6	**Power Mode for UART1.** See bits [31:30] for decode.
11:10	PMODE5	**Power Mode for System Management Bus Controller.** See bits [31:30] for decode.
9:8	PMODE4	**Power Mode for DMA (8237).** See bits [31:30] for decode.
7:6	RSVD	**Reserved.** Reads return 0. Writes have no effect.
5:4	PMODE2	**Power Mode for PIT (8254).** See bits [31:30] for decode.
3:2	PMODE1	**Power Mode for GeodeLink Adapter Local Bus Interface and Local Bus Clock.** See bits [31:30] for decode.
1:0	PMODE0	**Power Mode for GeodeLink Adapter GeodeLink Interface.** See bits [31:30] for decode.

6.6.1.6 GLD Diagnostic MSR (DIVIL_GLD_MSR_DIAG)

MSR Address 51400005h
Type R/W
Reset Value 00000000_00000000h

This register is reserved for internal use by AMD and should not be written to.

Downloaded from Arrow.com.

6.6.2 DIVIL Specific MSRs

Refer to Section 5.6 "Diverse Integration Logic" on page 103 for an explanation and block diagram of the address comparison mechanism of the base address and the address lines.

Note that the I/O space 04FFh-0000h is off limits to I/O LBARs.

6.6.2.1 Local BAR - IRQ Mapper (DIVIL_LBAR_IRQ)

MSR Address 51400008h
Type R/W
Reset Value 00000000_00000000h

See Section 5.6.1 "LBARs and Comparators" on page 104 for operational details.

The IRQ Mapper takes 32 bytes of I/O space. Use of this LBAR is optional. The IRQ Mapper is always available via MSR space.

DIVIL_LBAR_IRQ Register Map

63	62	61	60	59	58	57	56	55	54	53	52	51	50	49	48	47	46	45	44	43	42	41	40	39	38	37	36	35	34	33	32
RSVD																IO_MASK				RSVD											LBAR_EN
31	30	29	28	27	26	25	24	23	22	21	20	19	18	17	16	15	14	13	12	11	10	9	8	7	6	5	4	3	2	1	0
RSVD																BASE_ADDR											RSVD				

DIVIL_LBAR_IRQ Bit Descriptions

Bit	Name	Description
63:49	RSVD	**Reserved.** Reads return 0; writes have no effect.
48	RSVD	**Reserved.** Always write 0.
47:44	IO_MASK	**I/O Address Mask Value.** See discussion in Section 5.6.1 "LBARs and Comparators" on page 104.
43:33	RSVD	**Reserved.** Reads return 0; writes have no effect.
32	LBAR_EN	**LBAR Enable.** 0: Disable address detection by this LBAR. 1: Enable address detection by this LBAR.
31:20	RSVD	**Reserved.** Reads return 0; writes have no effect.
16	RSVD	**Reserved.** Always write 0.
15:5	BASE_ADDR	**Base Address in I/O Space.** See discussion in Section 5.6.1 "LBARs and Comparators" on page 104.
4:0	RSVD	**Reserved.** Reads return 0; writes have no effect.

6.6.2.2 Local BAR - KEL from USB OHC Host Controller (DIVIL_LBAR_KEL)

MSR Address 51400009h
Type R/W
Reset Value 00000000_00000000h

See Section 5.6.1 "LBARs and Comparators" on page 104 for operational details.

The KEL registers take 4 KB of memory space. However, only offsets 100h, 104h, 108h, and 10Ch contain registers. All other writes are “don’t care” and reads return 0.

Downloaded from Arrow.com.

DIVIL_LBAR_KEL Register Map

63	62	61	60	59	58	57	56	55	54	53	52	51	50	49	48	47	46	45	44	43	42	41	40	39	38	37	36	35	34	33	32
MEM_MASK																				RSVD											LBAR_EN
31	30	29	28	27	26	25	24	23	22	21	20	19	18	17	16	15	14	13	12	11	10	9	8	7	6	5	4	3	2	1	0
BASE_ADDR																				RSVD											

DIVIL_LBAR_KEL Bit Descriptions

Bit	Name	Description
63:44	MEM_MASK	**Memory Address Mask Value.** See discussion in Section 5.6.1 "LBARs and Comparators" on page 104.
43:33	RSVD	**Reserved.** Reads return 0; writes have no effect.
32	LBAR_EN	**LBAR Enable.** 0: Disable LBAR. 1: Enable LBAR.
31:12	BASE_ADDR	**Base Address in Memory Space.** See discussion in Section 5.6.1 "LBARs and Comparators" on page 104.
11:0	RSVD	**Reserved.** Reads return 0; writes have no effect.

6.6.2.3 Local BAR - SMB (DIVIL_LBAR_SMB)

MSR Address 5140000Bh
Type R/W
Reset Value 00000000_00000000h

See Section 5.6.1 "LBARs and Comparators" on page 104 for operational details. The SMB Controller takes 8 bytes of I/O space.

DIVIL_LBAR_SMB Register Map

63	62	61	60	59	58	57	56	55	54	53	52	51	50	49	48	47	46	45	44	43	42	41	40	39	38	37	36	35	34	33	32
RSVD																IO_MASK				RSVD											LBAR_EN
31	30	29	28	27	26	25	24	23	22	21	20	19	18	17	16	15	14	13	12	11	10	9	8	7	6	5	4	3	2	1	0
RSVD																BASE_ADDR													RSVD		

DIVIL_LBAR_SMB

Bit	Name	Description
63:49	RSVD	**Reserved.** Reads return 0; writes have no effect.
48	RSVD	**Reserved.** Always write 0.
47:44	IO_MASK	**I/O Address Mask Value.** See discussion in Section 5.6.1 "LBARs and Comparators" on page 104.
43:33	RSVD	**Reserved.** Reads return 0; writes have no effect.

Downloaded from Arrow.com.

DIVIL_LBAR_SMB (Continued)

Bit	Name	Description
32	LBAR_EN	**LBAR Enable.** 0: Disable LBAR. 1: Enable LBAR.
31:17	RSVD	**Reserved.** Reads return 0; writes have no effect.
16	RSVD	**Reserved.** Always write 0.
15:3	BASE_ADDR	**Base Address in I/O Space.** See discussion in Section 5.6.1 "LBARs and Comparators" on page 104.
2:0	RSVD	**Reserved.** Reads return 0; writes have no effect.

6.6.2.4 Local BAR - GPIO and ICFs (DIVIL_LBAR_GPIO)

MSR Address 5140000Ch
Type R/W
Reset Value 00000000_00000000h

See Section 5.6.1 "LBARs and Comparators" on page 104 for operational details. The GPIOs and ICFs take 256 bytes of I/O space.

DIVIL_LBAR_GPIO Register Map

63	62	61	60	59	58	57	56	55	54	53	52	51	50	49	48	47	46	45	44	43	42	41	40	39	38	37	36	35	34	33	32
RSVD																IO_MASK				RSVD											LBAR_EN
31	30	29	28	27	26	25	24	23	22	21	20	19	18	17	16	15	14	13	12	11	10	9	8	7	6	5	4	3	2	1	0
RSVD																BASE_ADDR				RSVD											

DIVIL_LBAR_GPIO Bit Description

Bit	Name	Description
63:49	RSVD	**Reserved.** Reads return 0; writes have no effect.
48	RSVD	**Reserved.** Always write 0.
47:44	IO_MASK	**I/O Address Mask Value.** See discussion in Section 5.6.1 "LBARs and Comparators" on page 104.
43:33	RSVD	**Reserved.** Reads return 0; writes have no effect.
32	LBAR_EN	**LBAR Enable.** 0: Disable LBAR. 1: Enable LBAR.
31:17	RSVD	**Reserved.** Reads return 0; writes have no effect.
16	RSVD	**Reserved.** Always write 0.
15:8	BASE_ADDR	**Base Address in I/O Space.** See discussion in Section 5.6.1 "LBARs and Comparators" on page 104.
7:0	RSVD	**Reserved.** Reads return 0; writes have no effect.

Downloaded from Arrow.com.

6.6.2.5 Local BAR - MFGPTs (DIVIL_LBAR_MFGPT)

MSR Address 5140000Dh
Type R/W
Reset Value 00000000_00000000h

See Section 5.6.1 "LBARs and Comparators" on page 104 for operational details. The MFGPTs take 64 bytes of I/O space.

DIVIL_LBAR_MFGPT Register Map

63	62	61	60	59	58	57	56	55	54	53	52	51	50	49	48	47	46	45	44	43	42	41	40	39	38	37	36	35	34	33	32
RSVD																IO_MASK				RSVD											LBAR_EN
31	30	29	28	27	26	25	24	23	22	21	20	19	18	17	16	15	14	13	12	11	10	9	8	7	6	5	4	3	2	1	0
RSVD																BASE_ADDR										RSVD					

DIVIL_LBAR_MFGPT Bit Descriptions

Bit	Name	Description
63:49	RSVD	**Reserved.** Reads return 0; writes have no effect.
48	RSVD	**Reserved.** Always write 0.
47:44	IO_MASK	**I/O Address Mask Value.** See discussion in Section 5.6.1 "LBARs and Comparators" on page 104.
43:33	RSVD	**Reserved.** Reads return 0; writes have no effect.
32	LBAR_EN	**LBAR Enable.** 0: Disable LBAR. 1: Enable LBAR.
31:17	RSVD	**Reserved.** Reads return 0; writes have no effect.
16	RSVD	**Reserved.** Always write 0.
15:6	BASE_ADDR	**Base Address in I/O Space.** See discussion in Section 5.6.1 "LBARs and Comparators" on page 104.
5	RSVD	**Reserved.** Reads return value written. Default value is 0. Note that this bit is reserved and performs no function.
4:0	RSVD	**Reserved.** Reads return 0; writes have no effect.

Downloaded from Arrow.com.

6.6.2.6 Local BAR - ACPI (DIVIL_LBAR_ACPI)

MSR Address 5140000Eh
Type R/W
Reset Value 00000000_00000000h

See Section 5.6.1 "LBARs and Comparators" on page 104 for operational details.

The ACPI registers take 32 bytes of I/O space. Offsets are as follows:

00h	PM1_STS	10h	PM_TMR
02h	PM1_EN	14h	Reserved
08h	PM1_CNT	18h	GPE0_STS
0Ch	PM2_CNT	1Ch	GPE0_EN

DIVIL_LBAR_ACPI Register Map

63	62	61	60	59	58	57	56	55	54	53	52	51	50	49	48	47	46	45	44	43	42	41	40	39	38	37	36	35	34	33	32
RSVD																IO_MASK				RSVD											LBAR_EN
31	30	29	28	27	26	25	24	23	22	21	20	19	18	17	16	15	14	13	12	11	10	9	8	7	6	5	4	3	2	1	0
RSVD																BASE_ADDR											RSVD				

DIVIL_LBAR_ACPI Bit Descriptions

Bit	Name	Description
63:49	RSVD	**Reserved.** Reads return 0; writes have no effect.
48	RSVD	**Reserved.** Always write 0.
47:44	IO_MASK	**I/O Address Mask Value.** See discussion in Section 5.6.1 "LBARs and Comparators" on page 104.
43:33	RSVD	**Reserved.** Reads return 0; writes have no effect.
32	LBAR_EN	**LBAR Enable.** 0: Disable LBAR. 1: Enable LBAR.
31:17	RSVD	**Reserved.** Reads return 0; writes have no effect.
16	RSVD	**Reserved.** Always write 0.
15:5	BASE_ADDR	**Base Address in I/O Space.** See discussion in Section 5.6.1 "LBARs and Comparators" on page 104.
4:0	RSVD	**Reserved.** Reads return 0; writes have no effect.

Downloaded from Arrow.com.

6.6.2.7 Local BAR - Power Management Support (DIVIL_LBAR_PMS)

MSR Address 5140000Fh
Type R/W
Reset Value 00000000_00000000h

See Section 5.6.1 "LBARs and Comparators" on page 104 for operational details. The Power Management Support registers take 128 bytes of I/O space.

DIVIL_LBAR_PMS Register Map

63	62	61	60	59	58	57	56	55	54	53	52	51	50	49	48	47	46	45	44	43	42	41	40	39	38	37	36	35	34	33	32
RSVD																IO_MASK				RSVD											LBAR_EN
31	30	29	28	27	26	25	24	23	22	21	20	19	18	17	16	15	14	13	12	11	10	9	8	7	6	5	4	3	2	1	0
RSVD																BASE_ADDR									RSVD						

DIVIL_LBAR_PMS Bit Descriptions

Bit	Name	Description
63:49	RSVD	**Reserved.** Reads return 0; writes have no effect.
48	RSVD	**Reserved.** Always write 0.
47:44	IO_MASK	**I/O Address Mask Value.** See discussion in Section 5.6.1 "LBARs and Comparators" on page 104.
43:33	RSVD	**Reserved.** Reads return 0; writes have no effect.
32	LBAR_EN	**LBAR Enable.** 0: Disable LBAR. 1: Enable LBAR.
31:17	RSVD	**Reserved.** Reads return 0; writes have no effect.
16	RSVD	**Reserved.** Always write 0.
15:7	BASE_ADDR	**Base Address in I/O Space.** See discussion in Section 5.6.1 "LBARs and Comparators" on page 104.
6:0	RSVD	**Reserved.** Reads return 0; writes have no effect.

Downloaded from Arrow.com.

6.6.2.8 Local BAR - Flash Chip Select (DIVIL_LBAR_FLSH[x])

See Section 5.6.1 "LBARs and Comparators" on page 104 for operational details.

The NAND Flash control registers take 16 bytes of I/O space. NOR Flash maps into some multiple of 4K bytes.

There are two forms of this LBAR depending on the space, memory or I/O, Flash Device 0 is mapped into. Space is determined by bit 34 of the LBAR.

Local BAR - Flash Chip Select 0 (DIVIL_LBAR_FLSH0)
MSR Address 51400010h
Type R/W
Reset Value 00000000_00000000h

Uses FLASH_CS0# and FLASH_CE0#.

Local BAR - Flash Chip Select 1 (DIVIL_LBAR_FLSH1)
MSR Address 51400011h
Type R/W
Reset Value 00000000_00000000h

Uses FLASH_CS1# and FLASH_CE1#.

Local BAR - Flash Chip Select 2 (DIVIL_LBAR_FLSH2)
MSR Address 51400012h
Type R/W
Reset Value 00000000_00000000h

Uses FLASH_CS2# and FLASH_CE2#.

Local BAR - Flash Chip Select 3 (DIVIL_LBAR_FLSH3)
MSR Address 51400013h
Type R/W
Reset Value 00000000_00000000h

Uses FLASH_CS3# and FLASH_CE3#.

DIVIL_LBAR_FLSH[x] Register Map

63	62	61	60	59	58	57	56	55	54	53	52	51	50	49	48	47	46	45	44	43	42	41	40	39	38	37	36	35	34	33	32
RSVD																IO_MASK												RSVD	MEM_IO = 0	NOR_NAND	LBAR_EN
MEM_MASK																RSVD													MEM_IO = 1	NOR_NAND	LBAR_EN
31	30	29	28	27	26	25	24	23	22	21	20	19	18	17	16	15	14	13	12	11	10	9	8	7	6	5	4	3	2	1	0
RSVD																BASE_ADDR												RSVD			
BASE_ADDR																RSVD															

DIVIL_LBAR_FLSH[x] Bit Descriptions

Bit	Name	Description
If bit 34 = 0; I/O Mapped		
63:49	RSVD	**Reserved.** Reads return value written. Defaults to 0
48	RSVD	**Reserved.** Always write 0.
47:36	IO_MASK	**I/O Address Mask Value.** For standard NAND Flash, bits [47:36] should be set to all 1s. Add 0s from the LSBs as needed for OEM specific devices that take more than 16 bytes.See discussion in Section 5.6.1 "LBARs and Comparators" on page 104
35	RSVD	**Reserved.** Reads return value written. Defaults to 0.
34	MEM_IO	**Memory or I/O Mapped.** 0: LBAR is I/O mapped). 1: LBAR is memory mapped.
33	NOR_NAND	**NOR or NAND.** 0: Use NOR chip select (FLASH_CS[x]#). 1: Use NAND chip select (FLASH_CE[x]#).

Downloaded from Arrow.com.

DIVIL_LBAR_FLSH[x] Bit Descriptions (Continued)

Bit	Name	Description
32	LBAR_EN	**LBAR Enable.** 0: Disable LBAR. 1: Enable LBAR.
31:17	RSVD	**Reserved.** Reads return value written. Defaults to 0.
16	RSVD	**Reserved.** Always write 0.
15:4	BASE_ADDR	**Base Address in I/O Space**. See discussion in Section 5.6.1 "LBARs and Comparators" on page 104.
3:0	RSVD	**Reserved.** Reads return value written. Defaults to 0.
If bit 34 = 1; Memory Mapped		
63:44	MEM_MASK	**Memory Address Mask Value.** See discussion in Section 5.6.1 "LBARs and Comparators" on page 104.
43:35	RSVD	**Reserved.** Reads return value written. Defaults to 0.
34	MEM_IO	**Memory or I/O Mapped.** 0: LBAR is I/O mapped. 1: LBAR is memory mapped.
33	NOR_NAND	**NOR or NAND.** 0: Use NOR chip select (FLASH_CS[x]#). 1: Use NAND chip select (FLASH_CE[x]#).
32	LBAR_EN	**LBAR Enable.** 0: Disable LBAR. 1: Enable LBAR.
31:12	BASE_ADDR	**Base Address in Memory Space.** See discussion in Section 5.6.1 "LBARs and Comparators" on page 104.
11:0	RSVD	**Reserved.** Reads return value written Defaults to 0.

6.6.2.9 Legacy I/O Space Controls (DIVIL_LEG_IO)

MSR Address 51400014h
Type R/W
Reset Value 04000003h

DIVIL_LEG_IO Register Map

31	30	29	28	27	26	25	24	23	22	21	20	19	18	17	16	15	14	13	12	11	10	9	8	7	6	5	4	3	2	1	0
RESET_SHUT_EN	RESET_BAD_EN	RSVD	SPEC_CYC_MD	0x000E_xxxx	0x000F_xxxx	LPC_DISABLE_MEM	LPC_DISABLE_IO	RSVD	UART2_ENABLE[2:0]			RSVD	UART1_ENABLE[2:0]			RSVD															RTC_ENABLE1	RTC_ENABLE0

Downloaded from Arrow.com.

DIVIL_LEG_IO Bit Description

Bit	Name	Description
31	RESET_SHUT_EN	**Shutdown Reset Enable** If set, this bit enables the issuance of the RESET_OUT# signal upon the detection of a PCI Shutdown cycle from the processor (or any other PCI master). The reason for the reset is recorded in the PM_SSC register (PMS I/O Offset 54h[9], see Section 6.18.3.19 on page 547 for bit details). 0: Do not issue RESET_OUT# upon detection of Shutdown cycle. 1: Issue RESET_OUT# upon detection of Shutdown cycle.
30	RESET_BAD_EN	**Bad Transaction Reset Enable** If set, this bit enables a system wide reset via the RESET_OUT# signal, if the GeodeLink Adapter detects a 'bad' GeodeLink transaction. The reason for the reset is recorded in the PM_SSC register (PMS I/O Offset 54h[12], see Section 6.18.3.19 on page 547 for bit details). 0: Do not issue RESET_OUT# upon detection of a "bad" transaction. 1: Issue RESET_OUT# upon detection of a "bad" transaction
29	RSVD	**Reserved:** This bit should always be written to 0.
28	SPEC_CYC_MD	**Special Cycle Mode.** Allows selection of how the DIVIL decodes local bus address for GeodeLink special cycles. (Default = 0) 0: Decode is per the PCI spec: 00h: Shutdown. 01h: Halt. All other values ignored. 1: Decode is per the x86 standard: 00h: Shutdown. 02h: Halt. All other values ignored.
27	0x000E_xxxx	**000Exxxxh Remap.** If high, memory addresses in the range of 000Exxxxh are remapped to FFFExxxxh. Applies to addresses except the LBAR comparators and other address decode functions. (Default = 0)
26	0x000F_xxxx	**000Fxxxxh Remap.** If high, memory addresses in the range of 000Fxxxxh are remapped to FFFFxxxxh. Applies to addresses except the LBAR comparators and other address decode functions. (Default = 1)
25	LPC_DISABLE_MEM	**LPC Disable Memory.** If high, discard all memory writes that would otherwise go to the LPC by default. For reads, return all 1s. "Default" means any address not explicitly mapped into on-chip memory space or claimed by an LBAR hit.
24	LPC_DISABLE_IO	**LPC Disable I/O.** If high, discard all I/O writes that would otherwise go to the LPC by default. For reads, return all 1s. "Default" means any address not explicitly mapped into on-chip legacy I/O space or claimed by an LBAR hit.
23	RSVD	**Reserved.** Reads return value written. Defaults to 0.
22:20	UART2_ENABLE [2:0]	**UART2 Enable.** 0xx: UART2 not enabled into DIVIL I/O space; use LPC. 100: UART2 enabled into I/O base 02E8h (COM4). 101: UART2 enabled into I/O base 02F8h (COM3). 110: UART2 enabled into I/O base 03E8h (COM2). 111: UART2 enabled into I/O base 03F8h (COM1). If UART1 and UART2 are set to the same I/O base, a decode error is generated on access.
19	RSVD	**Reserved.** Reads return value written. Defaults to 0.

Downloaded from Arrow.com.

DIVIL_LEG_IO Bit Description (Continued)

Bit	Name	Description
18:16	UART1_ENABLE [2:0]	**UART1 Enable.** 0xx: UART1 not enabled into DIVIL I/O space; use LPC. 100: UART1 enabled into I/O base 02E8h (COM4). 101: UART1 enabled into I/O base 02F8h (COM3). 110: UART1 enabled into I/O base 03E8h (COM2). 111: UART1 enabled into I/O base 03F8h (COM1). If UART1 and UART2 are set to the same I/O base, a decode error is generated on access.
15:2	RSVD	**Reserved.** Reads return value written. (Default = 0)
1	RTC_ENABLE1	**Real-Time Clock Map 1.** Routes I/O port locations 072h and 073h to the internal RTC high RAM or LPC. 0: RTC high RAM routed to LPC bus. 1: RTC high RAM routed to internal RTC. (Default)
0	RTC_ENABLE0	**Real-Time Clock Map 0.** Routes I/O port locations 070h and 071h internal RTC or LPC. Writes to port 070h (Index) are always routed internal. The MSB is used to establish the NMI enable state. 0: RTC routed to LPC bus. 1: RTC routed to internal RTC. (Default)

6.6.2.10 Ball Options Control (DIVIL_BALL_OPTS)

MSR Address 51400015h
Type R/W
Reset Value 00000x7xh

DIVIL_BALL_OPTS Register Map

31	30	29	28	27	26	25	24	23	22	21	20	19	18	17	16	15	14	13	12	11	10	9	8	7	6	5	4	3	2	1	0
RSVD																				SEC_BOOT_LOC		BOOT_OP_LATCHED		RSVD	PIN_OPT_LALL	PIN_OPT_LIRQ	PIN_OPT_LDRQ	PRI_BOOT_LOC[1:0]		RSVD	PIN_OPT_IDE

DIVIL_BALL_OPTS Bit Descriptions

Bit	Name	Description
31:12	RSVD	**Reserved.** Reads always return 0. Writes have no effect; by convention, always write 0.
11:10	SEC_BOOT_LOC	**Secondary Boot Location.** These bits determine which chip select asserts for addresses in the range F00F0000h to F00F3FFFh. Defaults to the same value as boot option: 00: LPC ROM. 01: Reserved. 10: Flash. 11: FirmWare Hub.
9:8	BOOT_OP_ LATCHED (RO)	**Latched Value of Boot Option (Read Only).** For values, see Table 3-5 "Boot Options Selection" on page 34.
7	RSVD	**Reserved.** Reads return value written. By convention, always write 0. Defaults low.

Downloaded from Arrow.com.

DIVIL_BALL_OPTS Bit Descriptions (Continued)

Bit	Name	Description
6	PIN_OPT_LALL	**All LPC Pin Option Selection.** 0: All LPC pins become GPIOs including LPC_DRQ# and LPC_SERIRQ. Ball H3 functions as GPIO22 Ball H2 functions as GPIO16 Ball J2 functions as GPIO17 Ball J1 functions as GPIO18 Ball K1 functions as GPIO19 Ball G1 functions as GPIO20 Ball G2 functions as GPIO21 1: All LPC pins are controlled by the LPC controller except LPC_DRQ# and LPC_SERIRQ use are determined by bits [5:4]. (Default) Ball H3 functions as LPC_FRAME# Ball H2 functions as LPC_AD0 Ball J2 functions as LPC_AD1 Ball J1 functions as LPC_AD2 Ball K1 functions as LPC_AD3 When this bit is low, there is an implied high for the LPC_DISABLE_MEM and LPC_DISABLE_IO bits in DIVIL_LEG_IO (MSR 51400014h[25:24]).
5	PIN_OPT_LIRQ	**LPC_SERIRQ or GPIO21 Pin Option Selection.** 0: Ball G2 is GPIO21. 1: Ball G2 functions as LPC_SERIRQ. (Default)
4	PIN_OPT_LDRQ	**LPC_DRQ# or GPIO20 Pin Option Selection.** 0: Ball G1 is GPIO20. 1: Ball G2 functions as LPC_DRQ#. (Default)
3:2	PRI_BOOT_LOC [1:0]	**Primary Boot Location.** Determines which chip select asserts for addresses at or above F0000000h, except those in the range specified by SEC_BOOT_LOC (bits [11:10]). Defaults to the same value as boot option. 00: LPC ROM. 01: Reserved. 10: Flash. 11: FirmWare Hub.
1	RSVD	**Reserved.** Reads return value written. By convention, always write 0. Defaults low.
0	PIN_OPT_IDE	**IDE or Flash Controller Pin Function Selection.** 0: All IDE pins associated with Flash Controller. Default if BOS[1:0] = 10. 1: All IDE pins associated with IDE Controller. Default if BOS[1:0] = 00 or 11. IDE_IRQ0 is multiplexed with GPIO2; therefore, this bit has no affect with regards to programming IDE_IRQ0. See Table 3-5 "Boot Options Selection" on page 34 for BOS[1:0] programming values.

Downloaded from Arrow.com.

6.6.2.11 Soft IRQ (DIVIL_SOFT_IRQ)

MSR Address 51400016h
Type R/W
Reset Value 00000000h

DIVIL_SOFT_IRQ Register Map

31	30	29	28	27	26	25	24	23	22	21	20	19	18	17	16	15	14	13	12	11	10	9	8	7	6	5	4	3	2	1	0
RSVD																															SOFT_IRQ

DIVIL_SOFT_IRQ Bit Descriptions

Bit	Name	Description
31:1	RSVD	**Reserved.** Reads return 0. Writes have no effect.
0	SOFT_IRQ	**Soft IRQ.** This bit can be written high or low. and is connected to the soft IRQ input of the IRQ Mapper. Hence, writing high causes an interrupt while writing low clears it. Reads return the value written.

6.6.2.12 Soft Reset (DIVIL_SOFT_RESET)

MSR Address 51400017h
Type R/W
Reset Value 00000000h

DIVIL_SOFT_RESET Register Map

31	30	29	28	27	26	25	24	23	22	21	20	19	18	17	16	15	14	13	12	11	10	9	8	7	6	5	4	3	2	1	0
RSVD																															SOFT_RESET

DIVIL_SOFT_RESET Bit Descriptions

Bit	Name	Description
31:1	RSVD	**Reserved.** Reads return 0. Writes have no effect.
0	SOFT_RESET	**Soft Reset.** This bit causes the system to hard reset when written to 1. Reads return 0.

Downloaded from Arrow.com.

6.6.2.13 Access Control DMA Request (DIVIL_AC_DMA)

MSR Address 5140001Eh
Type R/W
Reset Value 00000000h

The controls below only affect memory and I/O accesses to the target slaves. MSR accesses are not affected. However, MSR writes during DMA may have unintended side effects.

Note that when in demand or block mode, the UART reads and writes are disallowed; no corresponding mechanism exists to allow UART controller reads or writes during UART activity. If attempted, CPU writes have no effect and the CPU reads return all 1s.

The enables default to 0. If 0, reads or writes to the indicated device are blocked during activity. This may cause an SSMI or ERROR if enabled by the associated MSR. Thus, writes are discarded and reads return all Fs. If an enable is 0, a chip select for the indicated device is not asserted. If an enable is 1, the indicated device is available for access during activity.

DIVIL_AC_DMA Register Map

31	30	29	28	27	26	25	24	23	22	21	20	19	18	17	16	15	14	13	12	11	10	9	8	7	6	5	4	3	2	1	0
RSVD														AC_DMA_W	AC_DMA_R	RSVD												AC_DMA_LPC_IW	AC_DMA_LPC_IR	AC_DMA_LPC_MW	AC_DMA_LPC_MR

DIVIL_AC_DMA Bit Descriptions

Bit	Name	Description
31:18	RSVD	**Reserved.** Reads return 0; writes have no effect.
17	AC_DMA_W	**Allow DMA Writes during DMA Activity.** If set, this bit allows writes to the DMA controller during DMA activity (data transfers). This mechanism may be used, among other things, to abort a hung DMA transfer. If clear, DMA controller writes are locked out during DMA activity.
16	AC_DMA_R	**Allow DMA Reads during DMA Activity.** If set, this bit allows reads from the DMA controller during DMA activity (data transfers). If clear, DMA controller reads are locked out during DMA activity.
15:4	RSVD	**Reserved.** Reads return 0; writes have no effect.
3	AC_DMA_LPC_IW	**LPC I/O Writes during LPC DMA** If set, this bit allows I/O writes to the LPC bus during LPC DMA transfer. If clear, I/O writes are locked out during LPC DMA transfers.
2	AC_DMA_LPC_IR	**LPC I/O Reads during LPC DMA.** If set, this bit allows I/O reads to the LPC bus during LPC DMA transfer. If clear, I/O reads are locked out during LPC DMA transfers.
1	AC_DMA_LPC_MW	**LPC Memory Writes during LPC DMA.** If set, this bit allows memory writes to the LPC bus during LPC DMA transfer. If clear, memory writes are locked out during LPC DMA transfers.
0	AC_DMA_LPC_MR	**LPC Memory Reads during LPC DMA.** If set, this bit allows memory reads to the LPC bus during LPC DMA transfer. If clear, memory reads are locked out during LPC DMA transfers.

Downloaded from Arrow.com.

6.7 Floppy Port Register Descriptions

The registers for the Floppy Port are divided into two sets:

- Standard GeodeLink™ Device MSRs (Shared with DIVIL, see Section 6.6.1 "Standard GeodeLink™ Device (GLD) MSRs" on page 348.)
- Floppy Port Specific MSRs

The MSRs are accessed via the RDMSR and WRMSR processor instructions. The MSR address is derived from the perspective of the CPU Core. See Section 4.2 "MSR Addressing" on page 60 for more details on MSR addressing.

All MSRs are 64 bits, however, the Floppy Port Specific MSRs are called out as 8 bits. The Floppy Port treats writes to the upper 56 bits (i.e., bits [63:8]) of the 8-bit MSRs as don't cares and always returns 0 on these bits. Table 6-22 summarizes the Floppy Port Specific MSRs.

Table 6-22. Floppy Port Specific MSRs Summary

MSR Address	Type	Register Name	Reset Value	Reference
51400030h	RO	Floppy Port 3F2h Shadow (FLPY_3F2_SHDW)	xxh	Page 369
51400031h	RO	Floppy Port 3F7h Shadow (FLPY_3F7_SHDW)	xxh	Page 369
51400032h	RO	Floppy Port 372h Shadow (FLPY_372_SHDW)	xxh	Page 370
51400033h	RO	Floppy Port 377h Shadow (FLPY_377_SHDW)	xxh	Page 370

6.7.1 Floppy Port Specific MSRs

6.7.1.1 Floppy Port 3F2h Shadow (FLPY_3F2_SHDW)

MSR Address 51400030h
Type RO
Reset Value xxh

FLPY_3F2_SHDW Register Map

7	6	5	4	3	2	1	0
FLPY_PORT_3F2_VAL							

FLPY_3F2_SHDW Bit Descriptions

Bit	Name	Description
7:0	FLPY_PORT_3F2_VAL	**Floppy Port Shadow Register Value Last Written to I/O Port 3F2h.** Required for support of FDC power ON/OFF and Zero Volt Suspend/Resume coherency. This register is a copy of an I/O register that cannot safely be directly read. Value in register is not deterministic of when the register is being read. It is provided here to assist in a Save-to-Disk operation.

6.7.1.2 Floppy Port 3F7h Shadow (FLPY_3F7_SHDW)

MSR Address 51400031h
Type RO
Reset Value xxh

FLPY_3F7_SHDW Register Map

7	6	5	4	3	2	1	0
FLPY_PORT_3F7_VAL							

Downloaded from Arrow.com.

FLPY_3F7_SHDW Bit Descriptions

Bit	Name	Description
7:0	FLPY_PORT_3F7_VAL	**Floppy Port Shadow Register Value Last Written to I/O Port 3F7h.** Required for support of FDC power ON/OFF and Zero Volt Suspend/Resume coherency. This register is a copy of an I/O register that cannot safely be directly read. Value in register is not deterministic of when the register is being read. It is provided here to assist in a Save-to-Disk operation.

6.7.1.3 Floppy Port 372h Shadow (FLPY_372_SHDW)

MSR Address 51400032h
Type RO
Reset Value xxh

FLPY_372_SHDW Register Map

7	6	5	4	3	2	1	0
FLPY_PORT_372_VAL							

FLPY_372_SHDW Bit Descriptions

Bit	Name	Description
7:0	FLPY_PORT_372_VAL	**Floppy Port Shadow Register Value Last Written to I/O Port 372h.** Required for support of FDC power ON/OFF and Zero Volt Suspend/Resume coherency. This register is a copy of an I/O register that cannot safely be directly read. Value in register is not deterministic of when the register is being read. It is provided here to assist in a Save-to-Disk operation.

6.7.1.4 Floppy Port 377h Shadow (FLPY_377_SHDW)

MSR Address 51400033h
Type RO
Reset Value xxh

FLPY_377_SHDW Register Map

7	6	5	4	3	2	1	0
FLPY_PORT_377_VAL							

FLPY_377_SHDW Bit Descriptions

Bit	Name	Description
7:0	FLPY_PORT_377_VAL	**Floppy Port Shadow Register Value Last Written to I/O Port 377h.** Required for support of FDC power ON/OFF and Zero Volt Suspend/Resume coherency. This register is a copy of an I/O register that cannot safely be directly read. Value in register is not deterministic of when the register is being read. It is provided here to assist in a Save-to-Disk operation.

Downloaded from Arrow.com.

6.8 Programmable Interval Timer Register Descriptions

The registers for the Programmable Interval Timer (PIT) are divided into three sets:

- Standard GeodeLink™ Device MSRs (Shared with DIVIL, see Section 6.6.1 on page 348.)
- PIT Specific MSRs
- PIT Native Registers

The MSRs are accessed via the RDMSR and WRMSR processor instructions. The MSR address is derived from the perspective of the CPU Core. See Section 4.2 "MSR Addressing" on page 60 for more details on MSR addressing.

All MSRs are 64 bits, however, the PIT Specific MSRs are called out as 8 bits. The PIT treats writes to the upper 56 bits (i.e., bits [63:8]) of the 64-bit MSRs as don't cares and always returns 0 on these bits. The PIT Specific MSRs are summarized in Table 6-23.

The Native registers associated with the PIT are summarized in Table 6-24 and are accessed as I/O Addresses.

Table 6-23. PIT Specific MSRs Summary

MSR Address	Type	Register Name	Reset Value	Reference
51400036h	RO	PIT Shadow (PIT_SHDW)	00h	Page 372
51400037h	R/W	PIT Count Enable (PIT_CNTRL)	03h	Page 372

Table 6-24. PIT Native Registers Summary

PIT I/O Address	Type	Register Name	Reset Value	Reference
40h	W	PIT Timer 0 Counter - System (PIT_TMR0_CNTR_SYS)	00h	Page 373
	R	PIT Timer 0 Status - System (PIT_TMR0_STS_SYS)	00h	Page 374
41h	W	PIT Timer 1 Counter - Refresh (PIT_TMR1_CNTR_RFSH)	00h	Page 375
	R	PIT Timer 1 Status - Refresh (PIT_TMR1_STS_RFSH)	00h	Page 375
42h	W	PIT Timer 2 Counter - Speaker (PIT_TMR2_CNTR_SPKR)	00h	Page 376
	R	PIT Timer 2 Status - Speaker (PIT_TMR2_STS_SPKR)	00h	Page 376
43h	R/W	PIT Mode Control Word (PIT_MODECTL_WORD)	00h	Page 377
61h	R/W	Port B Control (PIT_PORTBCTL)	00h	Page 378

Downloaded from Arrow.com.

6.8.1 PIT Specific MSRs

6.8.1.1 PIT Shadow (PIT_SHDW)

MSR Address 51400036h
Type RO
Reset Value 00h

PIT_SHDW Register Map

7	6	5	4	3	2	1	0
PIT_SHDW							

PIT_SHDW Bit Descriptions

Bit	Name	Description
7:0	PIT_SHDW	**PIT Shadow.** This 8-bit port sequences through the following list of shadowed Programmable Interval Timer registers. At power on, a pointer starts at the first register in the list and consecutively reads to increment through it. A write to this register resets the read sequence to the first register. Each shadow register in the sequence contains the last data written to that location. The read sequence for this register is: 1. Counter 0 LSB (least significant byte) 2. Counter 0 MSB 3. Counter 1 LSB 4. Counter 1 MSB 5. Counter 2 LSB 6. Counter 2 MSB 7. Counter 0 Command Word 8. Counter 1 Command Word 9. Counter 2 Command Word **Note:** The LSB/MSB of the count is the counter base value, not the current value. In the case of counter mode 3, the LSB of the count is the counter base value - 1 (even count value). Bits [7:6] of the command words are not used.

6.8.1.2 PIT Count Enable (PIT_CNTRL)

MSR Address 51400037h
Type R/W
Reset Value 03h

PIT_CNTRL Register Map

7	6	5	4	3	2	1	0
RSVD			PIT_CNTR_ACC_DLY_EN	RSVD		PIT_CNTR1_EN	PIT_CNTR0_EN

Downloaded from Arrow.com.

PIT_CNTRL Bit Descriptions

Bit	Name	Description
7:5	RSVD	**Reserved.** Read zero. Write “don’t care”.
4	PIT_CNTR_ACC_DLY_EN	**PIT Counter Access Delay Enable.** Used as an access delay enable for the read and write operations of the PIT counters. This bit introduces a 1 µs delay between successive reads and/or writes of the PIT counters. This bit is intended to ensure that older, DOS-based programs that rely on the PIT timing access to be 1 µs still function properly. 0: Disable access delay. 1: Enable access delay.
3:2	RSVD	**Reserved.** Read zero. Write “don’t care”.
1	PIT_CNTR1_EN	**PIT Counter 1 Enable.** 0: Sets GATE1 input low. 1: Sets GATE1 input high.
0	PIT_CNTR0_EN	**PIT Counter 0 Enable.** 0: Sets GATE0 input low. 1: Sets GATE0 input high.
Note: PIT_CNTR2_EN (I/O Address 61h[0] (see Section 6.8.2.8 "Port B Control (PIT_PORTBCTL)" on page 378).		

6.8.2 PIT Native Registers

6.8.2.1 PIT Timer 0 Counter - System (PIT_TMR0_CNTR_SYS)

I/O Address 40h
Type W
Reset Value 00h

PIT_TMR0_CNTR_SYS_ Register Map

7	6	5	4	3	2	1	0
CNTR0							

PIT_TMR0_CNTR_SYS Bit Description

Bit	Name	Description
7:0	CNTR0	**Counter 0 Value.** Provides the base counter value.

Downloaded from Arrow.com.

6.8.2.2 PIT Timer 0 Status - System (PIT_TMR0_STS_SYS)

I/O Address 40h
Type R
Reset Value 00h

PIT_TMR0_STS_SYS Register Map

7	6	5	4	3	2	1	0
I/O Address 43h[7:0] = 1101xx10 or 0010xxxx (Must have previously been written.)							
CNTR0_CUR_COUNT							
I/O Address 43h[7:0] = 1110xx10 (Must have previously been written.)							
CNTR0_OUT	CNTR0_LOAD	CNTR0_RW		CNTR0_MODE			BCD

PIT_TMR0_STS_SYS Bit Descriptions

Bit	Name	Description
I/O Address 43h[7:0] = 1101xx10 or 0010xxxx (Must have previously been written.)		
7:0	CNTR0_CUR_ COUNT	**Counter 0 Current Count.** Reports the current count value in Counter 0.
I/O Address 43h[7:0] = 1110xx10 (Must have previously been written.)		
7	CNTR0_OUT	**Counter 0 Output.** Returns current state of counter output signal.
6	CNTR0_LOAD	**Counter 0 Loaded.** Last count written is loaded? 0: Yes. 1: No.
5:4	CNTR0_RW	**Counter 0 Read /Write Mode.** 00: Counter latch command. 01: R/W LSB only. 10: R/W MSB only. 11: R/W LSB, followed by MSB.
3:1	CNTR0_MODE	**Counter 0 Current Mode.** 000: Interrupt on terminal count. 001: Programmable one-shot. 010, 110: Rate generator. 011, 111: Square wave generator. 100: Software triggered pulse generator. 101: Hardware triggered pulse generator.
0	BCD	**BCD Mode.** 0: Binary. 1: BCD (binary coded decimal).

Downloaded from Arrow.com.

6.8.2.3 PIT Timer 1 Counter - Refresh (PIT_TMR1_CNTR_RFSH)

PIT I/O Address 41h
Type W
Reset Value 00h

PIT_TMR1_CNTR_RFSH Register Map

7	6	5	4	3	2	1	0
CNTR1							

PIT_TMR1_CNTR_RFSH Bit Description

Bit	Name	Description
7:0	CNTR1	**Counter 1 Value.** Provides the base counter value.

6.8.2.4 PIT Timer 1 Status - Refresh (PIT_TMR1_STS_RFSH)

PIT I/O Address 41h
Type R
Reset Value 00h

PIT_TMR1_STS_RFSH Register Map

7	6	5	4	3	2	1	0
I/O Address 43h[7:0] = 1101x1x0 or 0110xxxx (Must have previously been written.)							
CNTR1_CUR_COUNT							
I/O Address 43h[7:0] = 1110x1x0 (Must have previously been written.)							
CNTR1_OUT	CNTR1_LOAD	CNTR1_RW		CNTR1_MODE			BCD

PIT_TMR1_STS_RFSH Bit Descriptions

Bit	Name	Description
I/O Address 43h[7:0] = 1101x1x0 or 0110xxxx (Must have previously been written.)		
7:0	CNTR1_CUR_COUNT	**Counter 1 Current Count.** Reports the current count value in Counter 1.
I/O Address 43h[7:0] = 1110x1x0 (Must have previously been written.)		
7	CNTR1_OUT	**Counter 1 Output.** Returns current state of counter output signal.
6	CNTR1_LOAD	**Counter 1 Loaded.** Last count written is loaded? 0: Yes. 1: No.
5:4	CNTR1_RW	**Counter 1 Read /Write Mode.** 00: Counter latch command. 01: R/W LSB only. 10: R/W MSB only. 11: R/W LSB, followed by MSB.

Downloaded from Arrow.com.

PIT_TMR1_STS_RFSH Bit Descriptions (Continued)

Bit	Name	Description
3:1	CNTR1_MODE	**Counter 1 Current Mode.** 000: Interrupt on terminal count. 001: Programmable one-shot. 010, 110: Rate generator. 011, 111: Square wave generator. 100: Software triggered pulse generator. 101: Hardware triggered pulse generator.
0	BCD	**BCD Mode.** 0: Binary. 1: BCD (binary coded decimal).

6.8.2.5 PIT Timer 2 Counter - Speaker (PIT_TMR2_CNTR_SPKR)

PIT I/O Address 42h
Type W
Reset Value 00h

PIT_TMR2_CNTR_SPKR Register Map

7	6	5	4	3	2	1	0
CNTR2							

PIT_TMR2_CNTR_SPKR Bit Description

Bit	Name	Description
7:0	CNTR2	**Counter 2 Value.** Provides the base counter value.

6.8.2.6 PIT Timer 2 Status - Speaker (PIT_TMR2_STS_SPKR)

PIT I/O Address 42h
Type R
Reset Value 00h

PIT_TMR2_STS_SPKR Register Map

7	6	5	4	3	2	1	0
I/O Address 43h[7:0] = 11011xx0 or 1000xxxx (Must have previously been written.)							
CNTR2_CUR_COUNT							
I/O Address 43h[7:0] = 11101xx0 (Must have previously been written.)							
CNTR2_OUT	CNTR2_LOAD	CNTR2_RW		CNTR2_MODE			BCD

PIT_TMR2_STS_SPKR Bit Descriptions

Bit	Name	Description
I/O Address 43h[7:0] = 11011xx0 or 1000xxxx (Must have previously been written.)		
7:0	CNTR2_CUR_COUNT	**Counter 2 Current Count.** Reports the current count value in Counter 2.

Downloaded from Arrow.com.

PIT_TMR2_STS_SPKR Bit Descriptions (Continued)

Bit	Name	Description
I/O Address 43h[7:0] = 11101xx0 (Must have previously been written.)		
7	CNTR2_OUT	**Counter 2 Output.** Returns current state of counter output signal.
6	CNTR2_LOAD	**Counter 2 Loaded.** Last count written is loaded? 0: Yes. 1: No.
5:4	CNTR2_RW	**Counter 2 Read /Write Mode.** 00: Counter latch command. 01: R/W LSB only. 10: R/W MSB only. 11: R/W LSB, followed by MSB.
3:1	CNTR2_MODE	**Counter 2 Current Mode.** 000: Interrupt on terminal count. 001: Programmable one-shot. 010, 110: Rate generator. 011, 111: Square wave generator. 100: Software triggered pulse generator. 101: Hardware triggered pulse generator.
0	BCD	**BCD Mode.** 0: Binary. 1: BCD (binary coded decimal).

6.8.2.7 PIT Mode Control Word (PIT_MODECTL_WORD)

PIT I/O Address 43h
Type R/W
Reset Value 00h

PIT_MODECTL_WORD Register Map

7	6	5	4	3	2	1	0
CNTR_SEL		R/W_MODE		CNTR_MODE			BCD

PIT_MODECTL_WORD Bit Descriptions

Bit	Name	Description
7:6	CNTR_SEL	**Counter Select.** 00: Counter 0. 01: Counter 1. 10: Counter 2. 11: Read-back Command (Note 1).
5:4	RW_MODE	**Current Read/Write Mode.** 00: Counter latch command (Note 2). 01: R/W LSB only. 10: R/W MSB only. 11: R/W LSB, followed by MSB.

Downloaded from Arrow.com.

PIT_MODECTL_WORD Bit Descriptions (Continued)

Bit	Name	Description
3:1	CNTR_MODE	**Current Counter Mode.** 000: Interrupt on terminal count. 001: Programmable one-shot. 010, 110: Rate generator. 011, 111: Square wave generator. 100: Software triggered pulse generator. 101: Hardware triggered pulse generator.
0	BCD	**BCD Mode.** 0: Binary. 1: BCD (binary coded decimal).

Note 1. If bits [7:6] = 11: Register functions as Read Status Command
Bit 5 = Latch Count, Bit 4 = Latch Status, Bit 3 = Select Counter 2, Bit 2 = Select Counter 1, Bit 1 = Select Counter 0, and Bit 0 = Reserved.

Note 2. If bits [5:4] = 00: Register functions as Counter Latch Command
Bits [7:6] = Selects Counter, and [3:0] = Don't care.

6.8.2.8 Port B Control (PIT_PORTBCTL)

PIT I/O Address 61h
Type R/W
Reset Value 00h

PIT_PORTBCTL Register Map

7	6	5	4	3	2	1	0
RSVD		OUT2_STS	TOGGLE	RSVD		PIT_CNTR2_SPKR	PIT_CNTR2_EN

PIT_PORTBCTL Bit Descriptions

Bit	Name	Description
7:6	RSVD	**Reserved.** Read 0. Write "don't care".
5	OUT2_STS (RO)	**PIT Counter 2 Out State (Read Only).** This bit reflects the current status of the PIT Counter 2 output (OUT2). Write "don't care".
4	TOGGLE (RO)	**Toggle (Read Only).** This bit toggles on every falling edge of Counter 1 output (OUT1). Write "don't care".
3:2	RSVD	**Reserved.** Read 0. Write "don't care".
1	PIT_CNTR2_ SPKR	**PIT Counter 2 (Speaker).** 0: Forces speaker output to 0. 1: Allows Counter 2 output (OUT2) to pass to the speaker (i.e., the AC_BEEP signal; a mux option on GPIO1).
0	PIT_CNTR2_EN	**PIT Counter 2 Enable.** 0: Sets GATE2 input low. 1: Sets GATE2 input high.

Downloaded from Arrow.com.

6.9 Programmable Interrupt Controller Register Descriptions

The registers for the Programmable Interrupt Controller (PIC) are divided into three sets:

- Standard GeodeLink™ Device MSRs (Shared with DIVIL, see Section 6.6.1 on page 348.)
- PIC Specific MSRs
- PIC Native Registers

The MSRs are accessed via the RDMSR and WRMSR processor instructions. The MSR address is derived from the perspective of the CPU Core. See Section 4.2 "MSR Addressing" on page 60 for more details on MSR addressing.

All MSRs are 64 bits, however, the PIC Specific MSRs are called out as 32 and 8 bits. The PIC treats writes to the upper 32/56 bits (i.e., bits [63:32/63:8]) of the 64-bit MSRs as don't cares and always returns 0 on these bits.

The PIC Specific MSRs are also accessible in I/O space via DIVIL_LBAR_IRQ (MSR 51400008h), except for PIC_SHDW (MSR 51400034h). See Section 6.6.2.1 "Local BAR - IRQ Mapper (DIVIL_LBAR_IRQ)" on page 356.

The Native registers associated with the PIC are summarized in Table 6-26 on page 379 and are accessed as I/O Addresses.

Table 6-25. PIC Specific MSRs Summary

MSR Address	PIC I/O Offset	Type	Register Name	Reset Value	Reference
51400020h	00h	R/W	IRQ Mapper Unrestricted Y Select Low (PIC_YSEL_LOW)	00000000h	Page 380
51400021h	04h	R/W	IRQ Mapper Unrestricted Y Select High (PIC_YSEL_HIGH)	00000000h	Page 381
51400022h	08h	R/W	IRQ Mapper Unrestricted Z Select Low (PIC_ZSEL_LOW)	00000000h	Page 380
51400023h	0Ch	R/W	IRQ Mapper Unrestricted Z Select High (PIC_ZSEL_HIGH)	00000000h	Page 381
51400024h	10h	R/W	IRQ Mapper Primary Mask (PIC_IRQM_PRIM)	0000FFFFh	Page 382
51400025h	14h	R/W	IRQ Mapper LPC Mask (PIC_IRQM_LPC)	00000000h	Page 382
51400026h	18h	RO	IRQ Mapper Extended Interrupt Request Status Low (PIC_XIRR_STS_LOW)	xxxxxxxxh	Page 383
51400027h	1Ch	RO	IRQ Mapper Extended Interrupt Request Status High (PIC_XIRR_STS_HIGH)	xxxxxxxxh	Page 384
51400034h	---	RO	PIC Shadow (PIC_SHDW)	xxh	Page 385

Table 6-26. PIC Native Registers Summary

PIC I/O Address	Type	Register Name	Reset Value	Reference
020h	WO	Initialization Command Word 1 (PIC_ICW1) - Master	00h	Page 387
0A0h	WO	Initialization Command Word 1 (PIC_ICW1) - Slave	00h	Page 387
021h	WO	Initialization Command Word 2 (PIC_ICW2) - Master	00h	Page 387
0A1h	WO	Initialization Command Word 2 (PIC_ICW2) - Slave	00h	Page 387
021h	WO	Initialization Command Word 3 (PIC_ICW3) - Master	00h	Page 388
0A1h	WO	Initialization Command Word 3 (PIC_ICW3) - Slave	00h	Page 388
021h	WO	Initialization Command Word 4 (PIC_ICW4) - Master	00h	Page 388
0A1h	WO	Initialization Command Word 4 (PIC_ICW4) - Slave	00h	Page 388
021h	R/W	Operation Command Word 1 / Interrupt Mask (PIC_OCW1/IM) - Master	00h	Page 389

Downloaded from Arrow.com.

Table 6-26. PIC Native Registers Summary (Continued)

PIC I/O Address	Type	Register Name	Reset Value	Reference
0A1h	R/W	Operation Command Word 1 / Interrupt Mask (PIC_OCW1/IM) - Slave	00h	Page 389
020h	WO	Operation Command Word 2 (PIC_OCW2) - Master	00h	Page 389
0A0h	WO	Operation Command Word 2 (PIC_OCW2) - Slave	00h	Page 389
020h	WO	Operation Command Word 3 (PIC_OCW3) - Master	00h	Page 390
0A0h	WO	Operation Command Word 3 (PIC_OCW3) - Slave	00h	Page 390
020h	RO	Interrupt Request (PIC_IRR) - Master	00h	Page 391
0A0h	RO	Interrupt Request (PIC_IRR) - Slave	00h	Page 391
020h	RO	In-Service (PIC_ISR) - Master	00h	Page 391
0A0h	RO	In-Service (PIC_ISR) - Slave	00h	Page 391
4D0h	R/W	Interrupt Edge/Level Select 1 (PIC_INT_SEL1)	00h	Page 392
4D1h	R/W	Interrupt Edge/Level Select 2 (PIC_INT_SEL2)	00h	Page 393

6.9.1 PIC Specific MSRs

6.9.1.1 IRQ Mapper Unrestricted Y and Z Select Low (PIC_[Y/Z]SEL_LOW)

IRQ Mapper Unrestricted Y Select Low (PIC_YSEL_LOW)

MSR Address 51400020h
PIC I/O Offset 00h
Type R/W
Reset Value 00000000h

IRQ Mapper Unrestricted Z Select Low (PIC_ZSEL_LOW)

MSR Address 51400022h
PIC I/O Offset 08h
Type R/W
Reset Value 00000000h

PIC_[Y/Z]SEL_LOW Register Map

31	30	29	28	27	26	25	24	23	22	21	20	19	18	17	16	15	14	13	12	11	10	9	8	7	6	5	4	3	2	1	0
MAP_[Y/Z]7				MAP_[Y/Z]6				MAP_[Y/Z]5				MAP_[Y/Z]4				MAP_[Y/Z]3				MAP_[Y/Z]2				MAP_[Y/Z]1				MAP_[Y/Z]0			

PIC_[Y/Z]SEL_LOW Bit Descriptions

Bit	Name	Description
31:28	MAP_[Y/Z]7	**Map Unrestricted [Y/Z] Input 7.** 0000: Disable 0100: IG4 1000: IG8 1100: IG12 0001: IG1 0101: IG5 1001: IG9 1101: IG13 0010: IG2 0110: IG6 1010: IG10 1110: IG14 0011: IG3 0111: IG7 1011: IG11 1111: IG15 For Unrestricted Y and Z Inputs [7:0] sources, see Table 5-13 and Table 5-14 on page 112.
27:24	MAP_[Y/Z]6	**Map Unrestricted [Y/Z] Input 6.** See bits [31:28] for decode.
23:20	MAP_[Y/Z]5	**Map Unrestricted [Y/Z] Input 5.** See bits [31:28] for decode.

Downloaded from Arrow.com.

PIC_[Y/Z]SEL_LOW Bit Descriptions (Continued)

Bit	Name	Description
19:16	MAP_[Y/Z]4	**Map Unrestricted [Y/Z] Input 4.** See bits [31:28] for decode.
15:12	MAP_[Y/Z]3	**Map Unrestricted [Y/Z] Input 3.** See bits [31:28] for decode.
11:8	MAP_[Y/Z]2	**Map Unrestricted [Y/Z] Input 2.** See bits [31:28] for decode.
7:4	MAP_[Y/Z]1	**Map Unrestricted [Y/Z] Input 1.** See bits [31:28] for decode.
3:0	MAP_[Y/Z]0	**Map Unrestricted [Y/Z] Input 0.** See bits [31:28] for decode.

6.9.1.2 IRQ Mapper Unrestricted Y and Z Select High (PIC_[Y/Z]SEL_HIGH)

IRQ Mapper Unrestricted Y Select High (PIC_YSEL_HIGH)

MSR Address 51400021h
PIC I/O Offset 04h
Type R/W
Reset Value 00000000h

IRQ Mapper Unrestricted Z Select High (PIC_ZSEL_HIGH)

MSR Address 51400023h
PIC I/O Offset 0Ch
Type R/W
Reset Value 00000000h

PIC_[Y/Z]SEL_HIGH Register Map

31	30	29	28	27	26	25	24	23	22	21	20	19	18	17	16	15	14	13	12	11	10	9	8	7	6	5	4	3	2	1	0
MAP_[Y/Z]15				MAP_[Y/Z]14				MAP_[Y/Z]13				MAP_[Y/Z]12				MAP_[Y/Z]11				MAP_[Y/Z]10				MAP_[Y/Z]9				MAP_[Y/Z]8			

PIC_[Y/Z]SEL_HIGH Bit Descriptions

Bit	Name	Description
31:28	MAP_[Y/Z]_15	**Map Unrestricted [Y/Z] Input 15.** 0000: Disable 0100: IG4 1000: IG8 1100: IG12 0001: IG1 0101: IG5 1001: IG9 1101: IG13 0010: IG2 0110: IG6 1010: IG10 1110: IG14 0011: IG3 0111: IG7 1011: IG11 1111: IG15 For Unrestricted Y and Z Inputs [7:0] sources, see Table 5-13 and Table 5-14 on page 112.
27:24	MAP_[Y/Z]_14	**Map Unrestricted [Y/Z] Input 14.** See bits [31:28] for decode.
23:20	MAP_[Y/Z]_13	**Map Unrestricted [Y/Z] Input 13.** See bits [31:28] for decode.
19:16	MAP_[Y/Z]_12	**Map Unrestricted [Y/Z] Input 12.** See bits [31:28] for decode.
15:12	MAP_[Y/Z]_11	**Map Unrestricted [Y/Z] Input 11.** See bits [31:28] for decode.
11:8	MAP_[Y/Z]_10	**Map Unrestricted [Y/Z] Input 10.** See bits [31:28] for decode.
7:4	MAP_[Y/Z]_9	**Map Unrestricted [Y/Z] Input 9.** See bits [31:28] for decode.
3:0	MAP_[Y/Z]_8	**Map Unrestricted [Y/Z] Input 8.** See bits [31:28] for decode.

Downloaded from Arrow.com.

6.9.1.3 IRQ Mapper Primary Mask (PIC_IRQM_PRIM)

MSR Address 51400024h
PIC I/O Offset 10h
Type R/W
Reset Value 0000FFFFh

PIC_IRQM_PRIM Register Map

31	30	29	28	27	26	25	24	23	22	21	20	19	18	17	16	15	14	13	12	11	10	9	8	7	6	5	4	3	2	1	0
RSVD																PRIM15_MSK	PRIM14_MSK	PRIM13_MSK	PRIM12_MSK	PRIM11_MSK	PRIM10_MSK	PRIM9_MSK	PRIM8_MSK	PRIM7_MSK	PRIM6_MSK	PRIM5_MSK	PRIM4_MSK	PRIM3_MSK	RSVD	PRIM1_MSK	PRIM0_MSK

PIC_IRQM_PRIM Bit Descriptions

Bit	Name	Description
31:16	RSVD	**Reserved.** Set to 0.
15:0	PRIM[15:0]_MSK	**Primary Inputs [15:0] Mask.** Bits [15:0] correspond to Primary Inputs [15:0], bit 2 is reserved (i.e., no IRQ2). 0: Mask the interrupt source. 1: Do not mask the interrupt source. For Primary Inputs [15:0] sources, see Table 5-12 on page 111.

6.9.1.4 IRQ Mapper LPC Mask (PIC_IRQM_LPC)

MSR Address 51400025h
PIC I/O Offset 14h
Type R/W
Reset Value 00000000h

PIC_IRQM_LPC Register Map

31	30	29	28	27	26	25	24	23	22	21	20	19	18	17	16	15	14	13	12	11	10	9	8	7	6	5	4	3	2	1	0
RSVD																LPC15_EN	LPC14_EN	LPC13_EN	LPC12_EN	LPC11_EN	LPC10_EN	LPC9_EN	LPC8_EN	LPC7_EN	LPC6_EN	LPC5_EN	LPC4_EN	LPC3_EN	RSVD	LPC1_EN	LPC0_EN

PIC_IRQM_LPC Bit Descriptions

Bit	Name	Description
31:16	RSVD	**Reserved.** Set to 0.
15:0	LPC[15:0]_EN	**LPC Inputs [15:0] Enable.** Bits [15:0] correspond to LPC Inputs [15:0], bit 2 is don't care (i.e., no IRQ2). 0: Disable interrupt source. 1: Enable interrupt source. For LPC Inputs [15:0] sources, see Table 5-12 on page 111.

Downloaded from Arrow.com.

6.9.1.5 IRQ Mapper Extended Interrupt Request Status Low (PIC_XIRR_STS_LOW)

MSR Address 51400026h
PIC I/O Offset 18h
Type RO
Reset Value xxxxxxxxh

PIC_XIRR_STS_LOW Register Map

31	30	29	28	27	26	25	24	23	22	21	20	19	18	17	16	15	14	13	12	11	10	9	8	7	6	5	4	3	2	1	0
IG7_STS				IG6_STS				IG5_STS				IG4_STS				IG3_STS				IG2_ STS		RSVD		IG1_STS				RSVD		IG0_ STS	

PIC_XIRR_STS_LOW Bit Descriptions

Bit	Name	Description
31:28	IG7_STS	**Interrupt Group 7 Status.** Reports the status of the four interrupts in this group. Bit 28: Primary Input 7. Bit 29: LPC Input 7. Bit 30: Unrestricted Y Input 7. Bit 31: Unrestricted Source Z Input 7.
27:24	IG6_STS	**Interrupt Group 6 Status.** Reports the status of the four interrupts in this group. Bit 24: Primary Input 6. Bit 25: LPC Input 6. Bit 26: Unrestricted Y Input 6. Bit 27: Unrestricted Z Input 6.
23:20	IG5_STS	**Interrupt Group 5 Status.** Reports the status of the four interrupts in this group. Bit 20: Primary Input 5. Bit 21: LPC Input 5. Bit 22: Unrestricted Y Input 5. Bit 23: Unrestricted Z Input 5.
19:16	IG4_STS	**Interrupt Group 4 Status.** Reports the status of the four interrupts in this group. Bit 16: Primary Input 4. Bit 17: LPC Input 4. Bit 18: Unrestricted Y Input 4. Bit 19: Unrestricted Z Input 4.
15:12	IG3_STS	**Interrupt Group 3 Status.** Reports the status of the four interrupts in this group. Bit 12: Primary Input 3. Bit 13: LPC Input 3. Bit 14: Unrestricted Y Input 3. Bit 15: Unrestricted Z Input 3.
11:10	IG2_STS	**Interrupt Group 2 Status.** Reports the status of the two interrupts in this group. Bit 10: Unrestricted Y Input 2. Bit 11: Unrestricted Z Input 2.
9:8	RSVD	**Reserved.** Always reads 0; no connection to any interrupts.
7:4	IG1_STS	**Interrupt Group 1 Status.** Reports the status of the four interrupts in this group. Bit 4: Primary Input 1. Bit 5: LPC Input 1. Bit 6: Unrestricted Y Input 1. Bit 7: Unrestricted Z Input 1.
3:2	RSVD	**Reserved.** Always reads 0; no connection to any interrupts.

Downloaded from Arrow.com.

PIC_XIRR_STS_LOW Bit Descriptions (Continued)

Bit	Name	Description
1:0	IG0_STS	**Interrupt Group 0 Status.** Reports the status of the two interrupts in this group. Bit 0: Primary Input 0. Bit 1: LPC Input 0.

6.9.1.6 IRQ Mapper Extended Interrupt Request Status High (PIC_XIRR_STS_HIGH)

MSR Address 51400027h
PIC I/O Offset 1Ch
Type RO
Reset Value xxxxxxxxh

PIC_XIRR_STS_HIGH Register Map

31	30	29	28	27	26	25	24	23	22	21	20	19	18	17	16	15	14	13	12	11	10	9	8	7	6	5	4	3	2	1	0
IG15_STS				IG14_STS				IG13_STS				IG12_STS				IG11_STS				IG10_STS				IG9_STS				IG8_STS			

PIC_XIRR_STS_HIGH Bit Descriptions

Bit	Name	Description
31:28	IG15_STS	**Group 15 Interrupt Status.** Reports the status of the four interrupts in this group. Bit 28: Primary Input 15. Bit 29: LPC Input 15. Bit 30: Unrestricted Y Input 15. Bit 31: Unrestricted Z Input 15.
27:24	IG14_STS	**Group 14 Interrupt Status.** Reports the status of the four interrupts in this group. Bit 24: Primary Input 14. Bit 25: LPC Input 14. Bit 26: Unrestricted Y Input 14. Bit 27: Unrestricted Z Input 14.
23:20	IG13_STS	**Group 13 Interrupt Status.** Reports the status of the four interrupts in this group. Bit 20: Primary Input 13. Bit 21: LPC Input 13. Bit 22: Unrestricted Y Input 13. Bit 23: Unrestricted Z Input 13.
19:16	IG12_STS	**Group 12 Interrupt Status.** Reports the status of the four interrupts in this group. Bit 16: Primary Input 12. Bit 17: LPC Input 12. Bit 18: Unrestricted Y Input 12. Bit 19: Unrestricted Z Input 12.
15:12	IG11_STS	**Group 11 Interrupt Status.** Reports the status of the four interrupts in this group. Bit 12: Primary Input 11. Bit 13: LPC Input 11. Bit 14: Unrestricted Y Input 11. Bit 15: Unrestricted Z Input 11.
11:8	IG10_STS	**Group 10 Interrupt Status.** Reports the status of the four interrupts in this group. Bit 08: Primary Input 10. Bit 09: LPC Input 10. Bit 10: Unrestricted Y Input 10. Bit 11: Unrestricted Z Input 10.

Downloaded from Arrow.com.

PIC_XIRR_STS_HIGH Bit Descriptions (Continued)

Bit	Name	Description
7:4	IG9_STS	**Group 9 Interrupt Status.** Reports the status of the four interrupts in this group. Bit 4: Primary Input 9. Bit 5: LPC Input 9. Bit 6: Unrestricted Y Input 9. Bit 7: Unrestricted Z Input 9.
3:0	IG8_STS	**Group 8 Interrupt Status.** Reports the status of the four interrupts in this group. Bit 0: Primary Input 8. Bit 1: LPC Input 8. Bit 2: Unrestricted Y Input 8. Bit 3: Unrestricted Z Input8.

6.9.1.7 PIC Shadow (PIC_SHDW)

MSR Address 51400034h
Type RO
Reset Value xxh

PIC_SHDW Register Map

7	6	5	4	3	2	1	0
PIC_SHDW							

PIC_SHDW Bit Descriptions

Bit	Name	Description
7:0	PIC_SHDW (RO)	**PIC Shadow (Read Only).** This 8-bit port sequences through the following list of shadowed Programmable Interrupt Controller registers. At power on, a pointer starts at the first register in the list and consecutively reads incrementally through it. A write to this register resets the read sequence to the first register. Each shadow register in the sequence contains the last data written to that location. The read sequence for this register is: 1. PIC1 ICW1. 2. PIC1 ICW2. 3. PIC1 ICW3. 4. PIC1 ICW4 - Bits [7:5] of ICW4 are always 0. 5. PIC1 OCW2 - Bits [6:3] of OCW2 are always 0 (Note 1). 6. PIC1 OCW3 - Bits [7, 4] are 0 and bit [6, 3] are 1. 7. PIC2 ICW1. 8. PIC2 ICW2. 9. PIC2 ICW3. 10. PIC2 ICW4 - Bits [7:5] of ICW4 are always 0. 11. PIC2 OCW2 - Bits [6:3] of OCW2 are always 0 (Note 1). 12. PIC2 OCW3 - Bits [7, 4] are 0 and bit [6, 3] are 1.

Note 1. To restore OCW2 to shadow register value, write the appropriate address twice. First with the shadow register value, then with the shadow register value ORed with C0h.

Downloaded from Arrow.com.

6.9.2 PIC Native Registers

There are two separate PIC sub-blocks in the AMD Geode™ CS5536 companion device, connected in a cascaded arrangement, as is required for a PC-compatible system. Each PIC has its own native register set, apart from the MSR registers (unique to the CS5536 companion device architecture), which are common.

The master PIC occupies I/O Addresses 020h and 021h, and manages IRQ signals IRQ0 through IRQ7, with IRQ2 claimed as the cascade input for the slave PIC. The slave PIC occupies I/O Addresses 0A0h and 0A1h, and manages IRQ signals IRQ8 through IRQ15. In this description, the two addresses of a PIC are called the Even address (A[0] = 0) and the Odd address (A[0] = 1).

The PIC register set addressing is often confusing due to some very severe constraints the PIC had in its earliest history. When it was a separate chip, the package pinout limited it to only one address line. To make up for this, two bits of the data written (bits 3 and 4) sometimes serve an addressing function to select registers.

The chip functions in two fundamental modes with respect to register accesses: it is either in *Operation* mode (normal operation), or it is in *Initialization* mode (being initialized). Different sets of registers are selected in each mode.

Operation Mode

When the PIC is in Operation mode, a set of registers may be accessed, called the Operation Command Words (OCWs).

- OCW1: The Interrupt Mask register (IM), may be read or written at any time except during Initialization.
- OCW2: A write only register that is given commands from software. For example, the End of Interrupt command is written here at the end of interrupt service to terminate the blocking of interrupts on the basis of priority.
- OCW3: A write only register that is given a different set of commands from software. For example, it is through this register that software can request images of two internal registers:
  - — IRR: Interrupt Request Register - Shows those IRQs with pending interrupts that have not yet received an Interrupt Acknowledge from the CPU.
  - — ISR: In-Service Register - Shows those IRQs that have received Interrupt Acknowledge, but whose interrupt service routines have not yet completed.

Initialization Mode

The PIC is placed into its Initialization mode by a write of a reserved value (xxx1xxxx) to the even-numbered address (master 0020h / slave 00A0h). This is the first of a sequence of writes to a special set of Initialization Control Word registers (ICW1, ICW2, ICW3 and ICW4) that hold permanent settings and are normally touched only while the operating system is booting.

6.9.2.1 Register Addressing Scheme

Writing to the Even Address

Data Bit		
4	3	Access Performed
0	0	In Operation mode, writes to OCW2, asserting a routine command.
0	1	In Operation mode, writes to OCW3, asserting a special or diagnostic command. Commands written to OCW3 may request to examine an internal PIC register; if so, this (even) address must be immediately read to retrieve the requested value and terminate the command. See "Reading from the Even Address" below.
1	0 or 1	Triggers Initialization mode and writes to ICW1. Bit 3 is used as a data bit in this case.

Other write and read accesses do not depend directly on this form of addressing.

Writing to the Odd Address

- Operation Mode: Writes to the Interrupt Mask Register: OCW1.
- Initialization Mode: Three successive writes to this address must immediately follow the write to ICW1 (above), before any other accesses are performed to the PIC. These writes load ICW2, ICW3 and ICW4 in succession, after which the PIC automatically transitions to Operation mode.

Reading from the Even Address

(Operation mode only: the Initialization mode does not involve reading.)

Reads from this address are generally for special or diagnostic purposes. The read must be preceded by writing a command to OCW3 (above), to select an internal register to read. This will be the IRR or ISR register.

(Another register, “POLL”, historically part of the PIC architecture, is not provided in the CS5536 companion device.)

Following that command, the read here will return the requested value.

Reading from the Odd Address

(Operation mode only: the Initialization mode does not involve reading.)

Always reads from the Interrupt Mask Register: OCW1.

Associated External Registers

Two directly addressable read/write registers, outside the addresses of the PICs themselves, have been added to allow individual control of which IRQs are level sensitive versus edge sensitive.

- INT_SEL1, I/O Address 04D0h, controls IRQ1, IRQ3-7
- INT_SEL2, I/O Address 04D1h, controls IRQ8-15

Downloaded from Arrow.com.

6.9.2.2 Initialization Command Word 1 (PIC_ICW1)

PIC I/O Port Master: 020h
Slave: 0A0h
Type WO
Reset Value 00h

PIC_ICW1 Register Map

7	6	5	4	3	2	1	0
RSVD			1	TRIGGER	RSVD		

PIC_ICW1 Bit Descriptions

Bit	Name	Description
7:5	RSVD	**Reserved.** Write to 0.
4	1	**Write to 1.** Write to 1 to write ICW1 and enter Initialization mode. (See Section 6.9.2 "PIC Native Registers" on page 386.)
3	TRIGGER	**Trigger Mode**. 0: Edge. 1: Level.
2:1	RSVD	**Reserved.** Write to 0.
0	RSVD	**Reserved.** Write to 1.

6.9.2.3 Initialization Command Word 2 (PIC_ICW2)

PIC I/O Port Master: 021h
Slave: 0A1h
Type WO
Reset Value 00h

PIC_ICW2 Register Map

7	6	5	4	3	2	1	0
A					RSVD		

PIC_ICW2 Bit Descriptions

Bit	Name	Description
7:3	A	**Address Lines.** For base vector of interrupt controller.
2:0	RSVD	**Reserved.** Write to 0.

Downloaded from Arrow.com.

6.9.2.4 Initialization Command Word 3 (PIC_ICW3)

PIC I/O Port Master: 021h
Slave: 0A1h
Type WO
Reset Value 00h

PIC_ICW3 Register Map

7	6	5	4	3	2	1	0
Master = CASCADE_IRQ; Slave = SLAVE_ID							

PIC_ICW3 Bit Descriptions

Bit	Name	Description
Master		
7:0	CASCADE_IRQ	**Cascade IRQ.** Must be written to 04h.
Slave		
7:0	SLAVE_ID	**Slave ID.** Must be written to 02h.

6.9.2.5 Initialization Command Word 4 (PIC_ICW4)

PIC I/O Port Master: 021h
Slave: 0A1h
Type WO
Reset Value 00h

PIC_ICW4 Register Map

7	6	5	4	3	2	1	0
RSVD			SPEC_NST	RSVD		AUTO_EOI	RSVD

PIC_ICW4 Bit Descriptions

Bit	Name	Description
7:5	RSVD	**Reserved.** Write to 0.
4	SPEC_NST	**Reserved (Special Fully Nested Mode).** Write to 0.
3:2	RSVD	**Reserved.** Write to 0.
1	AUTO_EOI	**Auto End of Interrupt.** This feature is present, but is not recommended for use. When set to 1, this bit causes the PIC to automatically issue an End of Interrupt internally, immediately after each Interrupt Acknowledge from the CPU. When cleared to 0 (the default), it requires software action (writing to the OCW2 register) to signal End of Interrupt. 0: Normal EOI. 1: Auto EOI (not recommended).
0	RSVD	**Reserved.** Write to 1 (8086/8088 mode).

Downloaded from Arrow.com.

6.9.2.6 Operation Command Word 1 / Interrupt Mask (PIC_OCW1/IM)

PIC I/O Port Master: 021h
Slave: 0A1h
Type R/W
Reset Value 00h

PIC_OCW1/IM Register Map

7	6	5	4	3	2	1	0
IRQ7_15M	IRQ6_14M	IRQ5_13M	IRQ4_12M	IRQ3_11M	IRQ2_10M	IRQ1_9M	IRQ0_8M

PIC_OCW1/IM Register Bit Descriptions

Bit	Name	Description
7	IRQ7_15M	**IRQ7 / IRQ15 Mask.** 0: Not Masked; 1: Masked.
6	IRQ6_14M	**IRQ6 / IRQ14 Mask.** 0: Not Masked; 1: Masked.
5	IRQ5_13M	**IRQ5 / IRQ13 Mask.** 0: Not Masked; 1: Masked.
4	IRQ4_12M	**IRQ4 / IRQ12 Mask.** 0: Not Masked; 1: Masked.
3	IRQ3_11M	**IRQ3 / IRQ11 Mask.** 0: Not Masked; 1: Masked.
2	IRQ2_10M	**IRQ2 / IRQ10 Mask.** 0: Not Masked; 1: Masked.
1	IRQ1_9M	**IRQ1 / IRQ9 Mask.** 0: Not Masked; 1: Masked.
0	IRQ0_8M	**IRQ0 / IRQ8 Mask.** 0: Not Masked; 1: Masked.

6.9.2.7 Operation Command Word 2 (PIC_OCW2)

PIC I/O Port Master: 020h
Slave: 0A0h
Type WO
Reset Value 00h

PIC_OCW2 Register Map

7	6	5	4	3	2	1	0
ROT_EOI			00		IRQ		

PIC_OCW2 Bit Descriptions

Bit	Name	Description
7:5	ROT_EOI	**Rotate/EOI Codes.** 000: Clear rotate in Auto EOI mode. 100: Set rotate in Auto EOI mode. 001: Non-specific EOI. 101: Rotate on non-specific EOI command. 010: No operation. 110: Set priority command (bits [2:0] must be valid). 011: Specific EOI (bits [2:0] must be valid. 111: Rotate on specific EOI command (bits [2:0] must be valid)
4:3	00	**Write to 0.** Write to 00 to write OCW2 (rather than OCW3 or ICW1). (See Section 6.9.2 "PIC Native Registers" on page 386.)
2:0	IRQ	**IRQ Number (000-111).**

Downloaded from Arrow.com.

6.9.2.8 Operation Command Word 3 (PIC_OCW3)

PIC I/O Port Master: 020h
Slave: 0A0h
Type WO
Reset Value 00h

PIC_OCW3 Register Map

7	6	5	4	3	2	1	0
RSVD	SP_MASK		01		RSVD	REG_READ	

PIC_OCW3 Bit Descriptions

Bit	Name	Description
7	RSVD	**Reserved.** Write to 0.
6:5	SP_MASK	**Special Mask Mode.** The internal SMM bit can be set or cleared using this 2-bit field. 0x: No change to the internal SMM bit. 10: Clears the internal SMM bit (i.e., value of SMM bit = 0). (Default after initialization) 11: Sets the internal SMM bit (i.e., value of SMM bit = 1). While the internal SMM bit is 1, interrupt blocking by priority is disabled, and only the Interrupt Mask Register (OCW1) is used to block interrupt requests to the CPU. While the internal SMM bit is 0 (the default), an unmasked IRQ must also be of higher priority than the IRQ of the currently running interrupt service routine. Regardless of the setting of this bit, the IRQ priority is still used to arbitrate among multiple allowed IRQ requests at the time of an Interrupt Acknowledge access from the CPU.
4:3	01	**Write to 01.** Write to 01 to write OCW3 (rather than OCW2 or ICW1). (See Section 6.9.2 "PIC Native Registers" on page 386.)
2	RSVD	**Reserved.** Write to 0. (Poll Command at this address is not supported.)
1:0	REG_READ	**Register Read Mode.** 00: No operation. 10: Read interrupt request register on next read of I/O Port 020h (master) or 0A0h (slave). 01: No operation. 11: Read interrupt service register on next read of I/O Port 020h (master) or 0A0h (slave).

Downloaded from Arrow.com.

6.9.2.9 Interrupt Request (PIC_IRR)

PIC I/O Port Master: 020h
Slave: 0A0h
Type RO
Reset Value 00h

This register is accessible only after the appropriate command is written to OCW3.

PIC_IRR Map

7	6	5	4	3	2	1	0
IRQ7_15STS	IRQ6_14STS	IRQ5_13STS	IRQ4_12STS	IRQ3_11STS	IRQ2_10STS	IRQ1_9STS	IRQ0_8STS

PIC_IRR Bit Descriptions

Bit	Name	Description
7	IRQ7_15STS	**IRQ7 / IRQ15 Status (Pending).** 0: Yes; 1: No.
6	IRQ6_14STS	**IRQ6 / IRQ14 Status (Pending).** 0: Yes; 1: No.
5	IRQ5_13STS	**IRQ5 / IRQ13 Status (Pending).** 0: Yes; 1: No.
4	IRQ4_12STS	**IRQ4 / IRQ12 Status (Pending).** 0: Yes; 1: No.
3	IRQ3_11STS	**IRQ3 / IRQ11 Status (Pending).** 0: Yes; 1: No.
2	IRQ2_10STS	**IRQ2 / IRQ10 Status (Pending).** 0: Yes; 1: No.
1	IRQ1_9STS	**IRQ1 / IRQ9 Status (Pending).** 0: Yes; 1: No.
0	IRQ0_8STS	**IRQ0 / IRQ8 Status (Pending).** 0: Yes; 1: No.

6.9.2.10 In-Service (PIC_ISR)

PIC I/O Port Master: 020h
Slave: 0A0h
Type RO
Reset Value 00h

This register is accessible only after the appropriate command is written to OCW3.

PIC_ISR Map

7	6	5	4	3	2	1	0
IRQ7_15IS	IRQ6_14IS	IRQ5_13IS	IRQ4_12IS	IRQ3_11IS	IRQ2_10IS	IRQ1_9IS	IRQ0_8IS

PIC_ISR Bit Descriptions

Bit	Name	Description
7	IRQ7_15IS	**IRQ7 / IRQ15 In-Service.** 0: No; 1: Yes.
6	IRQ6_14IS	**IRQ6 / IRQ14 In-Service.** 0: No; 1: Yes.
5	IRQ5_13IS	**IRQ5 / IRQ13 In-Service.** 0: No; 1: Yes.
4	IRQ4_12IS	**IRQ4 / IRQ12 In-Service.** 0: No; 1: Yes.
3	IRQ3_11IS	**IRQ3 / IRQ11 In-Service.** 0: No; 1: Yes.
2	IRQ2_10IS	**IRQ2 / IRQ10 In-Service.** 0: No; 1: Yes.
1	IRQ1_9IS	**IRQ1 / IRQ9 In-Service.** 0: No; 1: Yes.
0	IRQ0_8IS	**IRQ0 / IRQ8 In-Service.** 0: No; 1: Yes.

Downloaded from Arrow.com.

6.9.2.11 Interrupt Edge/Level Select 1 (PIC_INT_SEL1)

PIC I/O Port 4D0h
Type R/W
Reset Value 00h

PIC_INT_SEL1 Register Map

7	6	5	4	3	2	1	0
IRQ7_SEL	IRQ6_SEL	IRQ5_SEL	IRQ4_SEL	IRQ3_SEL	RSVD	IRQ1_SEL	RSVD

PIC_INT_SEL1 Bit Descriptions

Bit	Name	Description
7	IRQ7_SEL	**IRQ7 Edge or Level Select.** Selects PIC IRQ7 sensitivity configuration. 0: Edge; 1: Level. (Note 1)
6	IRQ6_SEL	**IRQ6 Edge or Level Select.** Selects PIC IRQ6 sensitivity configuration. 0: Edge; 1: Level. (Note 1)
5	IRQ5_SEL	**IRQ5 Edge or Level Select.** Selects PIC IRQ5 sensitivity configuration. 0: Edge; 1: Level. (Note 1)
4	IRQ4_SEL	**IRQ4 Edge or Level Select.** Selects PIC IRQ4 sensitivity configuration. 0: Edge; 1: Level. (Note 1)
3	IRQ3_SEL	**IRQ3 Edge or Level Select.** Selects PIC IRQ7 sensitivity configuration. 0: Edge; 1: Level. (Note 1)
2	RSVD	**Reserved.** Write to 0.
1	IRQ1_SEL	**IRQ1 Edge or Level Select.** Selects PIC IRQ1 sensitivity configuration. 0: Edge; 1: Level. (Note 1)
0	RSVD	**Reserved.** Write to 0.

Note 1. If ICW1 bit 3 in the PIC is set as level, it overrides the settings of this bit. This bit is provided to configure a PCI interrupt mapped to IRQ[x] on the PIC as level-sensitive (shared).

Downloaded from Arrow.com.

6.9.2.12 Interrupt Edge/Level Select 2 (PIC_INT_SEL2)

PIC I/O Port 4D1h
Type R/W
Reset Value 00h

PIC_INT_SEL2 Register Map

7	6	5	4	3	2	1	0
IRQ15_SEL	IRQ14_SEL	RSVD	IRQ12_SEL	IRQ11_SEL	IRQ10_SEL	IRQ9_SEL	RSVD

PIC_INT_SEL2 Bit Descriptions

Bit	Name	Description
7	IRQ15_SEL	**IRQ15 Edge or Level Select.** Selects PIC IRQ15 sensitivity configuration. 0: Edge; 1: Level. (Note 1)
6	IRQ14_SEL	**IRQ14 Edge or Level Select.** Selects PIC IRQ14 sensitivity configuration. 0: Edge; 1: Level. (Note 1)
5	RSVD	**Reserved.** Write to 0.
4	IRQ12_SEL	**IRQ12 Edge or Level Select.** Selects PIC IRQ12 sensitivity configuration. 0: Edge; 1: Level. (Note 1)
3	IRQ11_SEL	**IRQ11 Edge or Level Select.** Selects PIC IRQ11 sensitivity configuration. 0: Edge; 1: Level. (Note 1)
2	IRQ10_SEL	**IRQ10 Edge or Level Select.** Selects PIC IRQ10 sensitivity configuration. 0: Edge; 1: Level. (Note 1)
1	IRQ9_SEL	**IRQ9 Edge or Level Select.** Selects PIC IRQ9 sensitivity configuration. 0: Edge; 1: Level. (Note 1)
0	RSVD	**Reserved.** Write to 0.

Note 1. If ICW1 bit 3 in the PIC is set as level, it overrides the settings of this bit. This bit is provided to configure a PCI interrupt mapped to IRQ[x] on the PIC as level-sensitive (shared).

Downloaded from Arrow.com.

6.10 System Management Bus Register Descriptions

The registers for the System Management Bus (SMB) are divided into two sets:

- Standard GeodeLink™ Device MSRs (Shared with DIVIL, see Section 6.6.1 on page 348.)
- SMB Native Registers

The MSRs are accessed via the RDMSR and WRMSR processor instructions. The MSR address is derived from the perspective of the CPU Core. See Section 4.2 "MSR Addressing" on page 60 for more details on MSR addressing.

The Native registers (summarized in Table 6-27) are accessed via Base Address Register MSR_LBAR_SMB (MSR 5140000Bh) as I/O Offsets. (See Section 6.6.2.3 on page 357 for bit descriptions of the Base Address Register.)

Table 6-27. SMB Native Registers Summary

SMB I/O Offset	Type	Register Name	Reset Value	Reference
00h	R/W	SMB Serial Data (SMB_SDA)	00h	Page 395
01h	R/W	SMB Status (SMB_STS)	00h	Page 395
02h	R/W	SMB Control Status (SMB_CTRL_STS)	10h	Page 397
03h	R/W	SMB Control 1 (SMB_CTRL1)	00h	Page 398
04h	R/W	SMB Address (SMB_ADDR)	00h	Page 399
05h	R/W	SMB Control 2 (SMB_CTRL2)	00h	Page 400
06h	R/W	SMB Control 3 (SMB_CTRL3)	00h	Page 400
07h	R/W	SMB Reserved Register (SMBRSVD). Writes are “don't care” and reads return undefined value.	xxh	---

Downloaded from Arrow.com.

6.10.1 SMB Native Registers

6.10.1.1 SMB Serial Data (SMB_SDA)

SMB I/O Offset 00h
Type R/W
Reset Value 00h

SMB_SDA Register Map

7	6	5	4	3	2	1	0
SMBSDA							

SMB_SDA Bit Descriptions

Bit	Name	Description
7:0	SMBSDA	**SMB Serial Data.** This shift register is used to transmit and receive data. The MSB is transmitted (received) first, and the LSB is transmitted last. Reading or writing to this register is allowed only when the SDAST bit (SMB I/O Offset 01h[6]) is set, or for repeated starts after setting the START bit (SMB I/O Offset 03h[0]). Any attempt to access the register in other cases may produce unpredictable results.

6.10.1.2 SMB Status (SMB_STS)

SMB I/O Offset 01h
Type R/W
Reset Value 00h

This is a read/write register with a special clear. Some of its bits may be cleared by software, as described in the table below. This register maintains the current SMB status. On reset, and when the SMB is disabled, SMBST is cleared (00h).

Note: This register must be read as a byte only. Do not combine by using WORD or DWORD access.

SMB_STS Register Map

7	6	5	4	3	2	1	0
SLVSTP	SDAST	BER	NEGACK	STASTR	NMATCH	MASTER	XMIT

SMB_STS Bit Descriptions

Bit	Name	Description
7	SLVSTP	**Slave Stop (Read/Write 1 to Clear).** Writing 0 to SLVSTP is ignored. 0: Writing 1 or SMB disabled. 1: Stop condition detected after a slave transfer in which MATCH (SMB I/O Offset 02h[2]) or GCMATCH (SMB I/O Offset 02h[3]) was set.
6	SDAST (RO)	**SMB_DATA Status (Read Only).** 0: Reading from SMBSDA (SMB I/O Offset 00h[7:0]) during a receive, or when writing to it during a transmit. When START (SMB I/O Offset 03h[0]) is set, reading SMBSDA does not clear SDAST; enabling the SMB to send a repeated start in master receive mode. 1: SMBSDA awaiting data (transmit - master or slave) or holds data that should be read (receive - master or slave).

Downloaded from Arrow.com.

SMB_STS Bit Descriptions (Continued)

Bit	Name	Description
5	BER	**Bus Error (Read/Write 1 to Clear).** Writing 0 to BER is ignored. 0: Writing 1 or SMB disabled. 1: Invalid Start or Stop condition detected during data transfer (i.e., Start or Stop condition during the transfer of bits [8:2] and acknowledge cycle), or when an arbitration problem detected. If the SMBus loses an arbitration this bit is set.
4	NEGACK	**Neg Acknowledge (Read/Write 1 to Clear).** Writing 0 to NEGACK is ignored. 0: Writing 1 or SMB disabled. 1: Transmission not acknowledged on the ninth clock. (In this case, SDAST (bit 6) is not set.)
3	STASTR	**Stall After Start (Read/Write 1 to Clear).** Writing 0 to STASTR is ignored. When STASTR is set, it stalls the SMBus by pulling down the SMB_CLK line, and suspends any further action on the bus (e.g., receive of first byte in master receive mode). 0: Writing 1 or SMB disabled. 1: This bit is not set in the slave mode and is only set in the master transmit mode. When set, this bit indicates that the address was sent successfully and the bus is now stalled. Note that this mode of operation must be enabled with the STASTRE bit (SMB I/O Offset 03h[7]) in order for this bit to function this way. Also, if enabled with INTEN (SMB I/O Offset 03h[2]), an interrupt is sent when this bit is set. This bit is cleared by writing a 1 to it; writing 0 has no effect.
2	NMATCH	**New Match (Read/Write 1 to Clear).** Writing 0 to NMATCH is ignored. If INTEN (SMB I/O Offset 03h[2]) is set, an interrupt is sent when this bit is set. 0: Software writes 1 to this bit. 1: Address byte follows a Start condition or a Repeated Start, causing a match or a global-call match.
1	MASTER (RO)	**Master (Read Only).** 0: Arbitration loss (BER, bit 5, is set) or recognition of a Stop condition. 1: Bus master request succeeded and master mode active.
0	XMIT (RO)	**Transmit (Read Only).** Direction bit. 0: Master/slave transmit mode not active. 1: Master/slave transmit mode active.

Downloaded from Arrow.com.

6.10.1.3 SMB Control Status (SMB_CTRL_STS)

SMB I/O Offset 02h
Type R/W
Reset Value 10h

This register configures and controls the SMB functional block. It maintains the current SMB status and controls several SMB functions. On reset and when the SMB is disabled, the non-reserved bits of this register are cleared.

Note: This register must be read as a byte only. Do not combine by using WORD or DWORD access.

SMB_CTRL_STS Register Map

7	6	5	4	3	2	1	0
RSVD		TGSCL	TSDA	GCMTCH	MATCH	BB	BUSY

SMB_CTRL_STS Bit Descriptions

Bit	Name	Description
7:6	RSVD	**Reserved.** Reads return 0; writes have no effect.
5	TGSCL	**Toggle SMB_CLK Line.** Enables toggling the SMB_CLK line during error recovery. 0: Clock toggle completed. 1: When the SMB_DATA line is low, writing 1 to this bit toggles the SMB_CLK line for one cycle. Writing 1 to TGSCL while SMB_DATA is high is ignored.
4	TSDA (RO)	**Test SMB_DATA Line (Read Only).** This bit reads the current value of the SMB_DATA line. It can be used while recovering from an error condition in which the SMB_DATA line is constantly pulled low by an out-of-sync slave. Data written to this bit is ignored.
3	GCMTCH (RO)	**Global Call Match (Read Only).** 0: Start condition or Repeated Start and a Stop condition (including Illegal Start or Stop condition). 1: In slave mode, GCMEN (SMB I/O Offset 03h[5]) is set and the address byte (the first byte transferred after a Start condition) is 00h.
2	MATCH (RO)	**Address Match (Read Only).** 0: Start condition or Repeated Start and a Stop condition (including Illegal Start or Stop condition). 1: SAEN (SMB I/O Offset 04h[7]) is set and the first 7 bits of the address byte (the first byte transferred after a Start condition) match the 7-bit address in the SMBADDR (SMB I/O Offset 04h[6:0]).
1	BB	**Bus Busy (Read/Write 1 to Clear).** 0: Writing 1, SMB disabled, or Stop condition detected. 1: Bus active (a low level on either SMB_DATA or SMB_CLK), or Start condition.
0	BUSY (RO)	**Busy (Read Only).** This bit indicates the SMB is either in slave transmit/receive or master transmit/receive mode, or if there is an arbitration going on the bus. 0: SMB disabled or SMbus in Idle mode 1: SMB is in one of the following states: -Generating a Start condition. -Detects a Start condition. -Master mode (MASTER (SMB I/O Offset 01h[1]) is set). -Slave mode (MATCH (bit 2) or GCMTCH (bit 3) are set).

Downloaded from Arrow.com.

6.10.1.4 SMB Control 1 (SMB_CTRL1)

SMB I/O Offset 03h
Type R/W
Reset Value 00h

This register configures and controls the SMB functional block. It maintains the current SMB status and controls several SMB functions. On reset and when the SMB is disabled, the non-reserved bits of SMB_CTRL1 are cleared.

Note: This register must be read as a byte only. Do not combine by using WORD or DWORD access.

SMB_CTRL1 Register Map

7	6	5	4	3	2	1	0
STASTRE	NMINTE	GCMEN	ACK	RSVD	INTEN	STOP	START

SMB_CTRL1 Bit Descriptions

Bit	Name	Description
7	STASTRE	**Stall After Start Enable.** 0: When cleared, STASTR (SMB I/O Offset 01h[3]) can not be set. However, if STASTR is set, clearing STASTRE will not clear STASTR. 1: Stall after start mechanism enabled, and SMB stalls the bus after the address byte.
6	NMINTE	**New Match Interrupt Enable.** 0: No interrupt issued on a new match. 1: Interrupt issued on a new match only if INTEN (bit 2) is set.
5	GCMEN	**Global Call Match Enable.** 0: SMB not responding to global call. 1: Global call match enabled.
4	ACK	**Receive Acknowledge.** This bit is ignored in transmit mode. When the device acts as a receiver (slave or master), this bit holds the transmitting instruction that is transmitted during the next acknowledge cycle. 0: Cleared after acknowledge cycle. 1: Negative acknowledge issued on next received byte.
3	RSVD	**Reserved.** Reads return 0; writes have no effect.
2	INTEN	**Interrupt Enable.** 0: SMB interrupt disabled. 1: SMB interrupt enabled. An interrupt is generated in response to one of the following events: -Detection of an address match (NMATCH, SMB I/O Offset 01h[2] = 1) and NMINTE (bit 6) = 1. -Receipt of bus error (BER, SMB I/O Offset 01h[5] = 1). -Receipt of Negative Acknowledge after sending a byte (NEGACK, SMB I/O Offset 01h[4] = 1). -Acknowledge of each transaction (same as the hardware set of the SDAST bit, SMB I/O Offset 01h[6]) when DMA not enabled. -In master mode if STASTRE = 1 (SMB I/O Offset 03h[7]), after a successful start (STASTR = 1, SMB I/O Offset 01h[3]). -Detection of a Stop condition while in slave mode (SLVSTP = 1, SMB I/O Offset 01h[7]).

Downloaded from Arrow.com.

SMB_CTRL1 Bit Descriptions

Bit	Name	Description
1	STOP	**Stop.** 0: Automatically cleared after Stop issued. 1: Setting this bit in master mode generates a Stop condition to complete or abort current message transfer.
0	START	**Start.** Set this bit only when in master mode or when requesting master mode. 0: Cleared after Start condition sent or Bus Error (SMB I/O Offset 01h[5] = 1) detected. 1: Single or repeated Start condition generated on the SMB. If the device is not the active master of the bus (SMB I/O Offset 01h[1] = 0), setting START generates a Start condition when the SMB becomes free (SMB I/O Offset 02h[1] = 0). An address transmission sequence should then be performed. If the device is the active master of the bus (MASTER = 1), setting START and then writing to SMBSDA generates a Start condition. If a transmission is already in progress, a repeated Start condition is generated. This condition can be used to switch the direction of the data flow between the master and the slave, or to choose another slave device without separating them with a Stop condition.

6.10.1.5 SMB Address (SMB_ADDR)

SMB I/O Offset 04h
Type R/W
Reset Value 00h

SMB_ADDR Register Map

7	6	5	4	3	2	1	0
SAEN	SMBADDR						

SMB_ADDR Bit Descriptions

Bit	Name	Description
7	SAEN	**Slave Enable.** 0: SMB does not check for an address match with address field. 1: Address field holds a valid address and enables the match of ADDR to an incoming address byte.
6:0	SMBADDR	**Device address (SMB Own Address).** These bits hold the 7-bit device address. When in slave mode, the first 7 bits received after a Start condition are compared with this field (first bit received is compared with bit 6, and the last bit with bit 0). If the address field matches the received data and SAEN (bit 7) is 1, a match is declared.

Downloaded from Arrow.com.

6.10.1.6 SMB Control 2 (SMB_CTRL2)

SMB I/O Offset 05h
Type R/W
Reset Value 00h

This register enables/disables the functional block and determines the SMB clock rate.

SMB_CTRL2 Register Map

7	6	5	4	3	2	1	0
SCLFRQ[6:0]							EN

SMB_CTRL2 Bit Descriptions

Bit	Name	Description
7:1	SCLFRQ[6:0]	**SMB_CLK Frequency.** This field combined with SCLFRQ[14:7] (SMB I/O Offset 06h[7:0]) defines the SMB_CLK period (low and high time) when the device serves as a bus master. The clock low and high times are defined as follows: $t_{SCLl} = t_{SCLh} = 2*SCLFRQ*t_{CLK}$ where t_{CLK} is the module input clock cycle. SCLFRQ can be programmed to values in the range of 0008h through 7FFFh. Using any other value has unpredictable results. The low and high time are generally equal unless two or more devices are driving the SCL line.
0	EN	**Enable.** 0: SMB is disabled, all registers are cleared, and clocks are halted. In the SMBCST (SMB I/O Offset 02h) register all bits are cleared except TSDA (bit 4), it reflects the value of SMB_DATA. 1: SMB is enabled.

6.10.1.7 SMB Control 3 (SMB_CTRL3)

SMB I/O Offset 06h
Type R/W
Reset Value 00h

This register enables/disables the functional block and determines the SMB clock rate.

SMB_CTRL3 Register Map

7	6	5	4	3	2	1	0
SCLFRQ[14:7]							

SMB_CTRL3 Bit Descriptions

Bit	Name	Description
7:0	SCLFRQ[14:7]	**SMB_CLK Frequency.** This field combined with SCLFRQ[6:0] in SMB_CTRL2 (SMB I/O Offset 05h) defines the SMB_CLK period (low and high time) when the device serves as a bus master. See SMB I/O Offset 05h for use of this register.

Downloaded from Arrow.com.

6.11 Keyboard Emulation Logic Register Descriptions

The registers for the Keyboard Emulation Logic (KEL) are divided into three sets:

- Standard GeodeLink™ Device MSRs (Shared with DIVIL, see Section 6.6.1 on page 348.)
- KEL Specific MSRs
- KEL Native Registers

The MSRs are accessed via the RDMSR and WRMSR processor instructions. The MSR address is derived from the perspective of the CPU Core. See Section 4.2 "MSR Addressing" on page 60 for more details on MSR addressing.

All MSRs are 64 bits, however, the KEL Specific MSRs are called out as 32 bits. The KEL treats writes to the upper 32 bits (i.e., bits [63:32]) of the 64-bit MSRs as don't cares and always returns 0 on these bits. The KEL Specific MSRs are summarized in Table 6-28.

Four Native registers are used to provide the keyboard emulation support, summarized in Table 6-29:

- KEL HCE Control Register: Used to enable and control the emulation hardware and report various status information.
- KEL HCE Input Register: Emulation side of the legacy 8048 Controller Input Buffer register. Writes to I/O Port 060h and 064h are read here.
- KEL HCE Output Register: Emulation side of the legacy 8048 Controller Output Buffer register where keyboard and mouse data is to be written by software. Reads from I/O Port 060h are setup here.
- KEL HCE Status Register: Emulation side of the legacy 8048 Controller Status register. Reads from I/O Port 60h are setup here.

Each of the Native registers is located on a 32-bit boundary. The Offset of these registers is relative to the base address. (See Section 6.6.2.2 "Local BAR - KEL from USB OHC Host Controller (DIVIL_LBAR_KEL)" on page 356) Any writes to locations outside this offset are a "don't care". Any reads to locations outside these offsets return zero.

Three of the operational registers (HCE_Status, HCE_Input, HCE_Output), summarized in Table 6-29, are accessible at I/O Port 060h and 064h when emulation is enabled. Port A is at I/O Port 092h. Reads and writes to the registers using I/O addresses have side effects as outlined in Table 6-30.

Table 6-28. KEL Specific MSRs Summary

MSR Address	Type	Register Name	Reset Value	Reference
5140001Fh	R/W	Keyboard Emulation Logic Control Register (KELX_CTL)	00000010h	Page 402

Table 6-29. KEL Native Registers Summary

KEL Memory Offset	Type	Width (Bits)	Register Name	Reset Value	Reference
100h	R/W	32	KEL HCE Control Register (KEL_HCE_CTRL)	00000000h	Page 403
104h	R/W	32	KEL HCE Input (KEL_HCE_IN)	000000xxh	Page 404
108h	R/W	32	KEL HCE Output (KEL_HCE_OUT)	000000xxh	Page 404
10Ch	R/W	32	KEL HCE Status (KEL_HCE_STS)	00000000h	Page 405
092h	R/W	8	Port A (KEL_PORTA)	00h	Page 406

Table 6-30. KEL Legacy Registers Emulated Summary

I/O Port	I/O Cycle	Register Contents Accessed/Modified	Side Effects in Emulation Mode
060h	Read	KEL_HCE_OUT	Read from Port 060h clears OutputFull in HCE_Status to 0.
060h	Write	KEL_HCE_IN	Write to Port 060h sets InputFull to 1 and CmdData to 0 in HCE_Status.
064h	Read	KEL_HCE_STS	Read from Port 064h returns current value of HCE_Status with no side effects.
064h	Write	KEL_HCE_IN	Write to Port 064h will set InputFull to 0 and CmdData in HCE_Status to 1.

Downloaded from Arrow.com.

6.11.1 KEL Specific MSRs

6.11.1.1 Keyboard Emulation Logic Control Register (KELX_CTL)

MSR Address 5140001Fh
Type R/W
Reset Value 00000010h

Port A operation is not effected by Snoop or EmulationEnable settings in this register.

KELX_CTL Register Map

31	30	29	28	27	26	25	24	23	22	21	20	19	18	17	16	15	14	13	12	11	10	9	8	7	6	5	4	3	2	1	0
RSVD																											PRTA_EN	SOFEVENT		EER	SNOOP

KELX_CTL Bit Descriptions

Bit	Name	Description
31:5	RSVD	**Reserved.** Writes have no effect; reads return 0.
4	PRTA_EN	**Port A Enable.** Defaults high. If high, Port A is enabled and accesses to I/O Port 092h are processed by the CS5536 companion device. If low, accesses to I/O Port 092h are passed on to the LPC bus (where Port A may exist inside a superI/O).
3:2	SOFEVENT	**Start-Of-Frame (SOF) Event Selection.** 00: Test Mode (No delays). 01: USB. 10: USB. 11: 1 ms from PIT.
1	EER	**Emulation Event (EE) Routing.** 0: Emulation Interrupt and ASMI. 1: ASMI only. The EER bit controls keyboard emulation interrupt generation associated with EEs: • Character Pending - Clear EE by setting the Outputfull bit (KEL Memory Offset 10Ch[0]) or clearing the CharacterPending bit (KEL Memory Offset 100h[2]). • Input Full - Clear EE by clearing the InputFull bit (KEL Memory Offset 10Ch[1]). • External IRQ - Clear EE by clearing IRQ1Active or IRQ12Active as appropriate (KEL Memory Offset 100h[6,7]).
0	SNOOP	**Snoop.** Only applies when EmulationEnable (KEL Memory Offset 100h[0]) is low. When high, indicates A20 and Init keyboard sequences are to be detected on I/O Port 060h/064h transactions to the LPC keyboard. KEL must generate ASMI upon detection of A20 and Init even though EmulationEnable is low. Emulation Enable / Snoop 0 / 1: PORTA_A20_ASMI or KEL_INIT_ASMI is generated when sequence is detected. Status of ASMI Flag and Enable bits are in DIVIL MSR 51400002h. 1 / x: PORTA_A20_ASMI or KEL_INIT_ASMI is generated when sequence is detected. KEL_ASMI is generated on InputFull, External IQ, or Character Pending. Status of ASMI Flag and Enable bits are in DIVIL MSR 51400002h For the A20 keyboard sequence, both KEL_ASMI and PORTA_A20_ASMI are signaled. 0 / 0: OFF.

Downloaded from Arrow.com.

6.11.2 KEL Native Registers

6.11.2.1 KEL HCE Control Register (KEL_HCE_CTRL)

KEL Memory Offset 100h
Type R/W
Reset Value 00000000h

KEL_HCE_CTRL Register Map

31	30	29	28	27	26	25	24	23	22	21	20	19	18	17	16	15	14	13	12	11	10	9	8	7	6	5	4	3	2	1	0
RSVD																							A20State	IRQ12Active	IRQ1Active	A20Sequence	ExternalIRQEn	IRQEn	CharacterPending	EmulationInterrupt	EmulationEnable

KEL_HCE_CTRL Bit Descriptions

Bit	Name	Description
31:9	RSVD	**Reserved.** Writes have no effect; reads return 0.
8	A20State	**A20 State.** Indicates current state of A20 on the LPC keyboard controller. Used to compare against value written to I/O Port 060h when A20Sequence is active. A20State is set and cleared only by software.
7	IRQ12Active	**IRQ12 Active.** Indicates that a positive transition on IRQ12 from the LPC keyboard controller has occurred. Software may write 1 to this bit to clear (0) it. A software write of 0 to this bit has no effect.
6	IRQ1Active	**IRQ1 Active.** Indicates that a positive transition on IRQ1 from the LPC keyboard controller has occurred. Software may write 1 to this bit to clear (0) it. A software write of a 0 to this bit has no effect.
5	A20Sequence	**A20 Sequence.** Set by KEL when a data value of D1h is written to I/O Port 064h. Cleared by KEL on write to I/O Port 064h of any value other than D1h.
4	ExternalIRQEn	**External Interrupt Request Enable.** When set to 1, IRQ1 and IRQ12 from the LPC keyboard controller cause an Emulation Event. The function controlled by this bit is independent of the setting of EmulationEnable (bit 0).
3	IRQEn	**Interrupt Request Enable.** When set, the KEL generates IRQ1 or IRQ12 as long as OutputFull (KEL Memory Offset 10Ch[0]) is set to 1. If the KEL Memory Offset 10Ch[5] is 0, then IRQ1 is generated; if it is 1, then an IRQ12 is generated.
2	CharacterPending	**Character Pending,** When set, an EE is generated when KEL Memory Offset 10Ch[0] is cleared to 0.
1	Emulation Interrupt (RO)	**Emulation Interrupt (Read Only).** This bit is a static decode of the EE state. Returns 1 if: CharacterPending = 1 OR InputFull = 1 OR ExternalIRQEn = 1 AND (IRQ1Active OR IRQ12Active = 1).
0	EmulationEnable	**Emulation Enable.** When set to 1, the KEL is enabled for legacy emulation. The KEL decodes accesses to I/O Port 060h and 064h and generates IRQ1 and/or IRQ12 when appropriate. Additionally, the KEL generates an ASMI at appropriate times to invoke the emulation software.

Downloaded from Arrow.com.

6.11.2.2 KEL HCE Input (KEL_HCE_IN)

KEL Memory Offset 104h
Type R/W
Reset Value 000000xxh

I/O data that is written to I/O Port 060h and 064h is captured in this register when emulation is enabled. This register may be read or written directly by accessing it with its memory address in the KEL's operational register space. When accessed directly via the KEL's operational address space, reads and writes of this register have no side effects.

KEL_HCE_IN Register Map

31	30	29	28	27	26	25	24	23	22	21	20	19	18	17	16	15	14	13	12	11	10	9	8	7	6	5	4	3	2	1	0
RSVD																								Input_Data							

KEL_HCE_IN Bit Descriptions

Bit	Name	Description
31:8	RSVD	**Reserved.** Writes have no effect; reads return 0.
7:0	Input_Data	**Input Data.** This register holds data normally read by SSM software. The register value is normally established by a write to I/O Port 060h or 064h. However, the value can also be established by a direct write. Such direct writes have no side effects.

6.11.2.3 KEL HCE Output (KEL_HCE_OUT)

KEL Memory Offset 108h
Type R/W
Reset Value 000000xxh

The data placed in this register by the emulation software is returned when I/O Port 060h is read and emulation is enabled. On a read of this location, the KEL Memory Offset 10Ch[0] is cleared to 0.

KEL_HCE_OUT Register Map

31	30	29	28	27	26	25	24	23	22	21	20	19	18	17	16	15	14	13	12	11	10	9	8	7	6	5	4	3	2	1	0
RSVD																								Output_Data							

KEL_HCE_OUT Bit Descriptions

Bit	Name	Description
31:8	RSVD	**Reserved.** Writes have no effect; reads return 0.
7:0	Output_Data	**Output Data.** This register holds data normally written by SSM software. It is returned when an I/O read of I/O Port 060h is performed. Writes to this register have no side effects. After writing this register, SSM software normally sets KEL Memory Offset 10Ch[0].

Downloaded from Arrow.com.

6.11.2.4 KEL HCE Status (KEL_HCE_STS)

KEL Memory Offset 10Ch
Type R/W
Reset Value 00000000h

The contents of this register are returned on an I/O read of I/O Port 064h when emulation is enabled. Reads and writes of I/O Port 060h and writes to I/O Port 064h can cause changes in this register. Emulation software can directly access this register through its memory address in the KEL's operational register space. Accessing this register through its memory address produces no side effects.

KEL_HCE_STS Register Map

31	30	29	28	27	26	25	24	23	22	21	20	19	18	17	16	15	14	13	12	11	10	9	8	7	6	5	4	3	2	1	0
RSVD																								Parity	Timeout	AuxOutputFull	InhibitSwitch	CmdData	Flag	InputFull	OutputFull

KEL_HCE_STS Bit Descriptions

Bit	Name	Description
31:8	RSVD	**Reserved.** Writes have no effect; reads return 0.
7	Parity	**Parity.** Indicates parity error on keyboard/mouse data. The value of this bit is only changed by a direct write to this register.
6	Timeout	**Timeout.** Used to indicate a timeout. The value of this bit is only changed by a direct write to this register.
5	AuxOutputFull	**Auxiliary Output Full.** IRQ12 is asserted whenever this bit is set, OutputFull (bit 0) is set, and IRQEn (KEL Memory Offset 100h[3]) is set. The value of this bit is only changed by a direct write to this register.
4	InhibitSwitch	**Inhibit Switch.** This bit reflects the state of the keyboard inhibit switch and is set if the keyboard is NOT inhibited.
3	CmdData	**Command Data.** The KEL clears this bit on an I/O write to I/O Port 60h and sets it on an I/O write to I/O Port 064h.
2	Flag	**Flag.** Nominally used as a system flag by software to indicate a warm or cold boot.
1	InputFull	**Input Full.** Except for the case of a A20 sequence, this bit is set on an I/O write to I/O Port 060h or 064h. While this bit is set and emulation is enabled, an emulation interrupt occurs. This bit can only be cleared by a direct write of 0.
0	OutputFull	**Output Full.** The KEL clears this bit on a read of I/O Port 060h. If IRQEn (KEL Memory Offset 100h[3]) is set and AuxOutputFull (bit 5) is clear, then an IRQ1 is generated as long as this bit is set. If IRQEn is set and AuxOutputFull is set, then an IRQ12 is generated as long as this bit is set. If this bit is clear and (KEL Memory Offset 100h[2]) is set, an emulation interrupt occurs. This bit can only be set by a direct write of this register.

Downloaded from Arrow.com.

6.11.2.5 Port A (KEL_PORTA)

I/O Port 092h
Type R/W
Reset Value 00h

PRTA_EN (MSR 5140001Fh[4]) is the Port A Enable bit. It must be set to 1 to enable access to this register; otherwise, Port A accesses are directed to the LPC bus where a Port A register may exist in a superI/O device.

KEL_PORTA Register Map

7	6	5	4	3	2	1	0
RSVD						A20_MASK	SYSR

KEL_PORTA Bit Descriptions

Bit	Name	Description
7:2	RSVD	**Reserved.** Writes have no effect; reads return 0.
1	A20_MASK	**A20 Mask.** This bit is necessary for older programs that require Port A Address bit 20 emulation. It requires ASMIs to be enabled in order for software to recognize the changing of this bit, and subsequent proper emulation of the A20 address bit (see DIVIL MSR 51400002h[6], for ASMI enabling details). Anytime this bit is changed an ASMI is generated. If this bit is 1 and a 0 is written, and ASMI generation is enabled, then proper VSA software operation causes a rollover of address from A[19:0] = all 1s, to A[19:0] = all 0s. Address bit A20 is 0. If this bit is 0 and a 1 is written, and ASMI generation is enabled, then no legacy rollover occurs from address [19:0] = all 1s. The next incremental address is A20 = 1 and A[19:0] = all 0.
0	SYSR	**Legacy System Reset.** Writing a 1 to this bit causes a system soft reset (INIT) that only happens if ASMIs are enabled (see DIVIL GLD_MSR_SMI, MSR 51400002h[7], for ASMI enabling details). Writing 0 to this bit has no effect. This bit always reads as 0.

Downloaded from Arrow.com.

6.12 UART and IR Port Register Descriptions

The registers for the UART/IR Controller are divided into three sets:

- Standard GeodeLink™ Device MSRs (Shared with DIVIL, see Section 6.6.1 on page 348.)
- UART/IR Controller Specific MSRs
- UART/IR Controller Native Registers

The MSRs are accessed via the RDMSR and WRMSR processor instructions. The MSR address is derived from the perspective of the CPU Core. See Section 4.2 "MSR Addressing" on page 60 for more details on MSR addressing.

All MSRs are 64 bits, however, the UART/IR Controller Specific MSRs (summarized in Table 6-31) are called out as 8 bits. The UART/IR Controller treats writes to the upper 56 bits (i.e., bits [63:8]) of the 64-bit MSRs as don't cares and always returns 0 on these bits.

The UART/IR Controller Native register set consists of eight register banks, each containing eight registers, to control UART operation. All registers use the same 8-byte address space to indicate I/O Offsets 00h-07h. The Native registers are accessed via Banks 0 through 7 as I/O Offsets. See DIVIL MSR_LEG_IO (MSR 51400014h) bits [22:20] and bits [18:16] for setting base address. Each bank and its offsets are summarized in Table 6-32.

Table 6-31. UART/IR Controller Specific MSRs Summary

MSR Address	Type	Register Name	Reset Value	Reference
51400038h	R/W	UART1 Primary Dongle and Modem Interface (UART[1]_MOD)	0xh	Page 410
51400039h	R/W	UART1 Secondary Dongle and Status (UART[1]_DONG)	xxh	Page 411
5140003Ah	R/W	UART1 Interface Configuration (UART[1]_CONF)	00h	Page 412
5140003Bh	R/W	UART1 Reserved MSR (UART[1]_RSVD_MSR) - Reads return 0; writes have no effect.	---	---
5140003Ch	R/W	UART2 Primary Dongle and Modem Interface (UART[2]_MOD)	0xh	Page 410
5140003Dh	R/W	UART2 Secondary Dongle and Status (UART[2]_DONG)	xxh	Page 411
5140003Eh	R/W	UART2 Interface Configuration (UART[2]_CONF)	00h	Page 412
5140003Fh	R/W	UART2 Reserved MSR (UART[2]_RSVD_MSR) - Reads return 0; writes have no effect.	---	---

Table 6-32. UART/IR Controller Native Registers Summary

I/O Offset	Type	Register Name	Reset Value	Reference
Bank 0				
00h	RO	Receive Data Port (RXD)	xxh	Page 414
	WO	Transmit Data Port (TXD)	xxh	Page 414
01h	R/W	Interrupt Enable Register (IER)	00h	Page 415
02h	RO	Event Identification Register (EIR)	Extended Mode: 22h	Page 416
			Non-Extended Mode: 01h	Page 418
	WO	FIFO Control Register (FCR)	00h	Page 419
03h	WO	Link Control Register (LCR)	00h	Page 420
	R/W	Bank Select Register (BSR)	00h	Page 422
04h	R/W	Modem/Mode Control Register (MCR)	00h	Page 423
05h	RO	Link Status Register (LSR)	60h	Page 424
06h	RO	Modem Status Register (MSR)	x0h	Page 426

Downloaded from Arrow.com.

Table 6-32. UART/IR Controller Native Registers Summary (Continued)

I/O Offset	Type	Register Name	Reset Value	Reference
07h	R/W	Scratchpad Register (SP)	00h	Page 427
	R/W	Auxiliary Status and Control Register (ASC)	00h	Page 427
Bank 1				
00h	R/W	Legacy Baud Generator Divisor Low Byte (LBGD_L)	xxh	Page 428
01h	R/W	Legacy Baud Generator Divisor High Byte (LBGD_H)	xxh	Page 428
02h	---	Reserved Register (RSVD)	---	---
03h	RW	Link Control Register (LCR)	00h	Page 429
	R/W	Bank Selection Encoding Register (BSR)	00h	Page 429
04h-07h	---	Reserved (RSVD)	---	---
Bank 2				
00h	R/W	Baud Generator Divisor Low Byte (BGD_L)	xxh	Page 430
01h	R/W	Baud Generator Divisor High Byte (BGD_H)	xxh	Page 430
02h	R/W	Extended Control Register 1 (EXCR1)	00h	Page 430
03h	R/W	Bank Select Register (BSR)	00h	Page 433
04h	R/W	Extended Control Register 2 (EXCR2)	00h	Page 433
05h	---	Reserved Register (RSVD)	---	---
06h	RO	TX_FIFO Current Level Register (TXFLV)	00h	Page 434
07h	RO	RX_FIFO Current Level Register (RXFLV)	00h	Page 434
Bank 3				
00h	RO	Module Identification and Revision ID Register (MRID)	0xh	Page 435
01h	RO	Shadow of Link Control Register (SH_LC)	00h	Page 435
02h	RO	Shadow of FIFO Control Register (SH_FC)	00h	Page 436
03h	R/W	Bank Select Register (BSR)	00h	Page 436
04h-07h	---	Reserved Register (RSVD)	---	---
Bank 4				
00h-01h	---	Reserved Register (RSVD)	---	---
02h	R/W	IR Control Register 1 (IRCR1)	00h	Page 436
03h	R/W	Bank Select Register (BSR)	00h	Page 437
04h-07h	---	Reserved Register (RSVD)	---	---
Bank 5				
00h-02h	---	Reserved Register (RSVD)	---	---
03h	R/W	Bank Select Register (BSR)	00h	Page 437
04h	R/W	IR Control Register 2 (IRCR2)	02h	Page 437
05h-07h	---	Reserved Register (RSVD)	---	---

Downloaded from Arrow.com.

Table 6-32. UART/IR Controller Native Registers Summary (Continued)

I/O Offset	Type	Register Name	Reset Value	Reference
Bank 6				
00h	R/W	IR Control Register 3 (IRCR3)	20h	Page 438
01h	---	Reserved Register (RSVD)	---	---
02h	R/W	SIR Pulse Width Register (SIR_PW)	00h	Page 439
03h	R/W	Bank Select Register (BSR)	00h	Page 439
04h-07h	---	Reserved Register (RSVD)	---	---
Bank 7				
00h	R/W	IR Receiver Demodulator Control Register (IRRXDC)	29h	Page 440
01h	R/W	IR Transmitter Modulator Control Register (IRTXMC)	69h	Page 442
02h	R/W	CEIR Configuration Register (RCCFG)	00h	Page 444
03h	R/W	Bank Select Register (BSR REGISTER)	00h	Page 445
04h	R/W	IR Interface Configuration Register 1 (IRCFG1)	xxh	Page 445
05h-06h	---	Reserved Register (RSVD)	---	---
07h	R/W	IR Interface Configuration 4 Register (IRCFG4)	00h	Page 446

Downloaded from Arrow.com.

6.12.1 UART/IR Controller Specific MSRs

6.12.1.1 UART[x] Primary Dongle and Modem Interface (UART[x]_MOD)

UART1 Primary Dongle and Modem Interface (UART[1]_MOD)

MSR Address 51400038h
Type R/W
Reset Value 0xh

UART2 Primary Dongle and Modem Interface (UART[2]_MOD)

MSR Address 5140003Ch
Type R/W
Reset Value 0xh

MSR_UART[x]_MOD is used for primary identification of the dongle interface and also provides the device with a virtual modem interface. To run legacy software, the modem control bits are set such that the software sees the modem always ready for data transfer.

UART[x]_MOD Register Map

7	6	5	4	3	2	1	0
MOD7	MOD6	MOD5	MOD4	ID0	ID1	ID2	ID3

UART[x]_MOD Bit Descriptions

Bit	Name	Description
7	MOD7	**Modem 7.** This bit directly sets the value of the Ring Indicator (RI) bit of the Modem Status Register (Bank 0, I/O Offset 06h[6]).
6	MOD6	**Modem 6.** This bit directly sets the value of the Data Set Ready (DSR) bit of the Modem Status Register (Bank 0, I/O Offset 06h[5]).
5	MOD5	**Modem 5.** This bit directly sets the value of the Data Carrier Detect (DCD) bit of the Modem Status Register (Bank 0, I/O Offset 06h[7]).
4	MOD4	**Modem 4.** This bit directly sets the value of the Clear to Send (CTS) bit of the Modem Status Register (Bank 0, I/O Offset 06h[4]).
3:0	ID0-ID3	**Primary Dongle Control Signals.** This field selects the type of IR Dongle allowing software to imitate the functionality of a real dongle. These bits are unused in UART mode. x000: Infrared transceiver with serial interface and differential signalling. x100: Reserved. 0010: IrDA-data transceiver is: Sharp RY5HD01 or Sharp RY5KD01. 1010: Reserved. 0110: Infrared transceiver with serial interface and single-ended signalling. 1110: Infrared transceiver supports consumer IR modes only. 0001: IrDA-data transceiver is: HP HSDL-2300 or HP HSDL-3600. 1001: IrDA-data transceiver is: IBM 31T1100, Vishay-Telefunken TFDS6000 or Siemens IRMS/T6400. 0101: Reserved. 1101: IrDA-data transceiver is: Vishay-Telefunken TFDS6500. x011: IrDA-data transceiver is: HP HSDL-1100, HP HSDL-2100, TI TSML 1100 or Sharp RY6FD11E. 0111: IrDA-data transceiver supports SIR mode only. 1111: No dongle connected.

Downloaded from Arrow.com.

6.12.1.2 UART[x] Secondary Dongle and Status (UART[x]_DONG)

UART1 Secondary Dongle and Status (UART[1]_DONG)

MSR Address 51400039h
Type R/W
Reset Value xxh

UART2 Secondary Dongle and Status (UART[2]_DONG)

MSR Address 5140003Dh
Type R/W
Reset Value xxh

UART[x]_DONG is used for secondary identification of the dongle interface, and along with UART[x]_MOD, constitutes a VDI (virtual dongle interface). The transceivers can also be configured for available mode by driving IRSL[2:0]. This support is not provided in the current design, but the values of these signals are written in VDI UART[x]_MOD in case there is a need to know what legacy software writes on IRSL[2:0] bits (via IRCFG1 at I/O Offset 04h in Bank 7). The MSR is readable by the software so the status of IRSL[2:0] can be known.

UART[x]_DONG Register Map

7	6	5	4	3	2	1	0
RSVD			IRSL2	IRSL1	IRSL0	ID3_SEC	ID0_SEC

UART[x]_DONG Bit Descriptions

Bit	Name	Description
7:5	RSVD	**Reserved.** Write as 0.
4:2	IRSL2-IRSL0 (RO)	**IRSL[2:0] (Read Only).** These bits are reflections of settings in the IRIC bits (Bank 7, I/O Offset 04h[2:0]). Software may read this field to determine the settings of the virtual IR interface (dongle). See Section 6.12.10.5 "IR Interface Configuration Register 1 (IRCFG1)" on page 445 for decode.
1	ID3_SEC	**Secondary Dongle Control Signal.** Secondary virtual dongle configuration bit. See Table 6-33. Refer to Section 5.12.3 "Dongle Interface" on page 142 for additional information.
0	ID0_SEC	**Secondary Dongle Control Signal.** Secondary virtual dongle configuration bit. See Table 6-33. Refer to Section 5.12.3 "Dongle Interface" on page 142 for additional information.

Table 6-33. Secondary ID Encoding

IRSL2	IRSL1	ID3	ID0
NCH	INV	NCH: No support INV: 36 KHz demodulation support (RC-5 and RC-6 protocols)	Reserved
INV	NCH	NCH: No support INV: 38 KHz demodulation support (NEC protocol)	NCH: No support INV: 40 KHz demodulation support (JVC, Panasonic protocols)
INV	INV	NCH: No support INV: 56.9 KHz demodulation support (RCA protocol)	Reserved

Note: NCH: No Change; INV: Invert.

Downloaded from Arrow.com.

6.12.1.3 UART[x] Interface Configuration (UART[x]_CONF)

UART1 Interface Configuration (UART[1]_CONF)

MSR Address 5140003Ah
Type R/W
Reset Value 00h

UART2 Interface Configuration (UART[2]_CONF)

MSR Address 5140003Eh
Type R/W
Reset Value 00h

UART[x]_CONF derives the control signals for mode and reset control.

UART[x]_CONF Register Map

7	6	5	4	3	2	1	0
RSVD	BUSY	RESET2SIR	EN_ BANKS	TEST	PWDN	DEVEN	MSR_SOFT_RESET

UART[x]_CONF Bit Descriptions

Bit	Name	Description
7	RSVD	**Reserved.** Write as 0.
6	BUSY (RO)	**Busy (Read Only).** When high, this bit indicates that the UART busy signal is active.
5	RESET2SIR	**IR Transmitter and Receiver Reset.** Set to 1 to enable reset to the IR transmitter and receiver. Write 0 to bring it out of reset. (Default = 0)
4	EN_BANKS	**Banks Enable.** When set to 1, enables access to upper banks (i.e., Banks 2 through 7). (Default = 0; that is, the UART boots in basic mode [16550 mode where access to upper banks is not needed]).
3	TEST	**Test.** When set to 1, the UART goes into test mode and generates a baud clock on the serial output pin UART[x]_TX. (Default = 0)
2	PWDN	**Power-down.** When set to 1, the UART clocks (24 MHz clock) are frozen, but interrupt remains enabled. (Default = 0)
1	DEVEN	**Device Enable.** Set to 1 to enable the UART. Resetting this bit disables UART functionality and masks the interrupt. (Default = 0)
0	MSR_SOFT_ RESET	**MSR Software Reset.** Writing a 1 resets the UART. (Default = 0)

Downloaded from Arrow.com.

6.12.2 UART/IR Controller Native Registers

Eight register banks, each containing eight registers, control UART/IR operation. All registers use the same 8-byte address space to indicate I/O Offsets 00h-07h. The active bank must be selected by the software.

The register bank organization enables access to the banks, as required for activation of all device modes, while maintaining transparent compatibility with 16450 or 16550 software. This activates only the registers and specific bits used in those devices.

The Bank Select Register (BSR) selects the active bank and is common to all banks. Therefore, each bank defines seven new registers. See Figure 6-1.

The default bank selection after the system reset is 0, placing the device in UART 16550 mode. Additionally, setting the baud in Bank 1 (as required to initialize the 16550 UART) switches the device to non-extended UART mode. This ensures that running existing 16550 software switches the system to the 16550 configuration without software modification.

Table 6-34 shows the main functions of the registers in each bank. Banks 0 to 3 control UART and IR modes of operation; Banks 4 to 7 control and configure the IR modes only. Banks 4 to 7 are reserved in UART2.

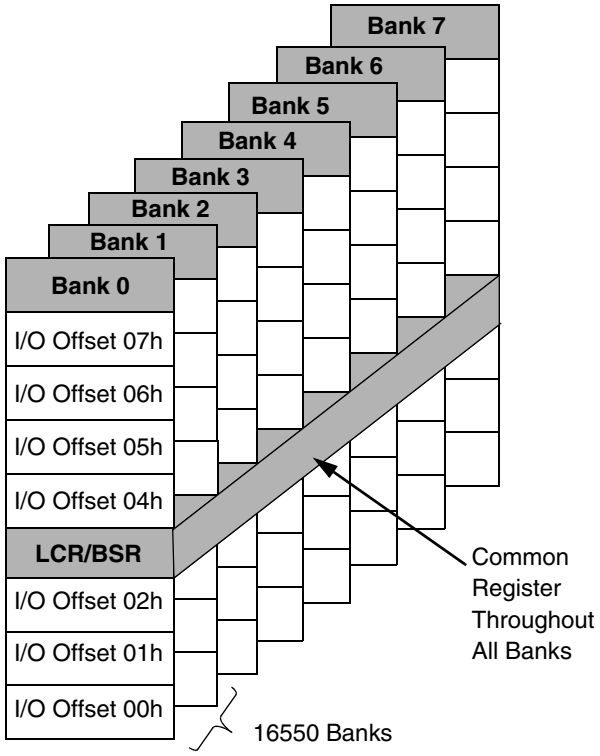

Figure 6-1. UART Register Bank Architecture

Table 6-34. Register Bank Summary

Bank	UART	IR Mode	Main Functions
0	x	x	Global control and status
1	x	x	Legacy bank
2	x	x	Alternative baud generator divisor, extended control, and status
3	x	x	Device revision ID and shadow registers
4		x	IR mode setup
5		x	IR control
6		x	IR physical layer configuration
7		x	CEIR and optical transceiver configuration

Downloaded from Arrow.com.

6.12.3 Bank 0 Register Descriptions

In non-extended modes of operation, Bank 0 is compatible with both the 16450 and 16550. Upon reset, this functional block defaults to the 16450 mode. In extended mode, all the registers (except RXD and TXD) offer additional features. The bit formats for the registers in Bank 0 are summarized in Table 6-35. Detailed descriptions of each register follow.

Table 6-35. Bank 0 Register Bit Map

I/O Offset	Name	Bits							
		7	6	5	4	3	2	1	0
00h	RXD	RXD7	RXD6	RXD5	RXD4	RXD3	RXD2	RXD1	RXD0
00h	TXD	TXD7	TXD6	TXD5	TXD4	TXD3	TXD2	TXD1	TXD0
01h	IER (Note 1)	RSVD				MS_IE	LS_IE	TXLDL_IE	RXHDL_IE
	IER (Note 2)	RSVD		TXEMP_IE	DMA_IE	MS_IE	LS_IE/ TXHLT_IE	TXLDL_IE	RXHDL_IE
02h	EIR (Note 1)	FEN[1:0]		RSVD		RXFT	IPR[1:0]		IPF
	EIR (Note 2)	RSVD		TXEMP_EV	DMA_EV	MS_EV	LS_EV/ TXHLT_EV	TXLDL_EV	RXHDL_IE
	FCR	RXFTH[1:0]		TXFTH[1:0]		RSVD	TXSR	RXSR	FIFO_EN
03h	LCR	BKSE	SBRK	STKP	EPS	PEN	STB	WLS[1:0]	
	BSR	BKSE	BSR[6:0]						
04h	MCR (Note 1)	RSVD			LOOP	ISEN or DCDLP	RILP	RTS	DTR
	MCR (Note 2)	MDSL[2:0]			IR_PLS	TX_DFR	DMA_EN	RTS	DTR
05h	LSR	ER_INF	TXEMP	TXRDY	BRK	FE	PE	OE	RXDA
06h	MSR	DCD	RI	DSR	CTS	DDCD	TERI	DDSR	DCTS
07h	SPR (Note 1)	Scratch Data							
	ASCR (Note 2)	CTE	TXUR	RXACT	RXWDG	RSVD	S_OET	RSVD	RXF_TOUT

Note 1. Non-Extended Mode.
Note 2. Extended Mode.

6.12.3.1 Receive/Transmit Data Ports

Receive Data Port (RXD)

I/O Offset 00h
Type RO
Reset Value xxh

Transmit Data Port (TXD)

I/O Offset 00h
Type WO
Reset Value xxh

The RXD (RO) and TXD (WO) ports share the same address.

RXD is accessed during CPU read cycles. It is used to receive incoming data when the FIFOs are disabled, or from the bottom of the RX_FIFO when the FIFOs are enabled.

TXD is accessed during CPU write cycles. It is used to write data directly to the transmitter when the FIFOs are disabled, or to the TX_FIFO when the FIFOs are enabled.

DMA cycles always access the TXD and RXD ports, regardless of the selected bank.

Downloaded from Arrow.com.

6.12.3.2 Interrupt Enable Register (IER)

I/O Offset 01h
Type R/W
Reset Value 00h

The IER register controls the enabling of various interrupts. Some interrupts are common to all operating modes of the functional block, while others are mode-specific. Bits [7:4] can be set in extended mode only. They are cleared in non-extended mode. When a bit is set to 1, an interrupt is generated when the corresponding event occurs. In non-extended mode, most events can be identified by reading the LSR and MSR. The receiver high-data-level event can only be identified by reading the EIR register after the corresponding interrupt has been generated. In extended mode, events are identified by event flags in the EIR register.

The bitmap of the IER register varies depending on the operating mode of the functional block. The modes can be divided into the two groups and selected via the EXT_SL bit in the EXCR1 register (Bank 2, I/O Offset 02h[0]):

- UART, Sharp-IR, SIR and CEIR in extended mode (EXT_SL = 1)
- UART, Sharp-IR and SIR in non-extended mode (EXT_SL = 0)

IER, Extended Mode: UART, SIR, Sharp-IR and CEIR (EXCR1.EXT_SL = 1)

IER Extended Mode Register Map

7	6	5	4	3	2	1	0
RSVD		TXEMP_IE	DMA_IE	MS_IE	LS_IE/ TXHLT_IE	TXLDL_IE	RXHDL_IE

IER Extended Mode Bit Descriptions

Bit	Name	Description
7:6	RSVD	**Reserved.** Write as 0.
5	TXEMP_IE	**Transmitter Empty Interrupt Enable.** Setting this bit to 1 enables transmitter empty interrupts (in all modes).
4	DMA_IE	**DMA Interrupt Enable.** Setting this bit to 1 enables the interrupt on terminal count when the DMA is enabled.
3	MS_IE	**Modem Status Interrupt Enable.** Setting this bit to 1 enables the interrupts on modem status events.
2	LS_IE/TXHLT_IE	**Link Status Interrupt Enable/Transmitter Halted Interrupt Enable.** Setting this bit enables link status interrupts and transmitter halted interrupts in CEIR.
1	TXLDL_IE	**Transmitter Low-Data-Level Interrupt Enable.** Setting this bit to 1 enables interrupts when the TX_FIFO is below the threshold level or the transmitter holding register is empty.
0	RXHDL_IE	**Receiver High-Data-Level Interrupt Enable.** Setting this bit to 1 enables interrupts when the RXD is full, or the RX_FIFO is equal to or above the RX_FIFO threshold level, or an RX_FIFO timeout occurs.

Notes (Extended Mode Only):

1) If the interrupt signal drives an edge-sensitive interrupt controller input, it is advisable to disable all interrupts by clearing all the IER register bits upon entering the interrupt routine, and re-enable them just before exiting it. This guarantees proper interrupt triggering in the interrupt controller should one or more interrupt events occur during execution of the interrupt routine.
2) If an interrupt source must be disabled, the CPU can do so by clearing the corresponding bit of the IER register. However, if an interrupt event occurs just before the corresponding enable bit of the IER register is cleared, a spurious interrupt may be generated. To avoid this problem, clearing of any IER register bit should be done during execution of the interrupt service routine. If the interrupt controller is programmed for level-sensitive interrupts, clearing IER register bits can be performed outside the interrupt service routine, but with the CPU interrupt disabled.
3) If the LSR, MSR, or EIR registers are to be polled, the interrupt sources (identified via self-clearing bits) should have their corresponding IER register bits set to 0. This prevents spurious pulses on the interrupt output pin.

Downloaded from Arrow.com.

IER, Non-Extended Mode: UART, SIR or Sharp-IR (EXCR1.EXT_SL = 0)

Upon reset, the IER register supports UART, SIR and Sharp-IR in non-extended modes.

IER Non-Extended Mode Register Map

7	6	5	4	3	2	1	0
RSVD				MS_IE	LS_IE	TXLDL_IE	RXHDL_IE

IER Non-Extended Mode Bit Descriptions

Bit	Name	Description
7:4	RSVD	**Reserved.** Write as 0.
3	MS_IE	**Modem Status Interrupt Enable.** Setting this bit to 1 enables the interrupts on modem status events. (EIR register bits [3:0] are 0000.)
2	LS_IE	**Link Status Interrupt Enable.** Setting this bit to 1 enables interrupts on Link Status events. (EIR register bits [3:0] are 0110.)
1	TXLDL_IE	**Transmitter Low Data Level Interrupt Enable.** Setting this bit to 1 enables interrupts on transmitter low data level events. (EIR register bits [3:0] are 0010.)
0	RXHDL_IE	**Receiver High Data Level Interrupt Enable.** Setting this bit to 1 enables interrupts on receiver high data level, or RX_FIFO timeout events. (EIR register bits [3:0] are 0100 or 1100.)

6.12.3.3 Event Identification Register (EIR)/FIFO Control Register (FCR)

The EIR register is a read only register and shares the same address as the write only FCR register.

Event Identification Register (EIR)

I/O Offset 02h
Type RO
Reset Value Extended Mode: 22h
Non-Extended Mode: 01h

The EIR indicates the interrupt source, and operates in two modes, non-extended mode (EXT_SL of the EXCR1 register = 0), and extended mode (EXT_SL of the EXCR1 register = 1) (Bank 2, I/O Offset 02h[0]). In non-extended mode (default), this register functions the same as in the 16550 mode.

EIR Register, Extended Mode (EXCR1.EXT_SL = 1)

In extended mode, each of the previously prioritized and encoded interrupt sources is broken down into individual bits. Each bit in this register acts as an interrupt pending flag, and is set to 1 when the corresponding event has occurred or is pending, regardless of the IER register bit setting. When this register is read, the DMA event (bit 4) is cleared if an 8237 type DMA controller is used. All other bits are cleared when the corresponding interrupts are acknowledged, by reading the relevant register (e.g., reading the MSR register clears MS_EV).

EIR Extended Mode Register Map

7	6	5	4	3	2	1	0
RSVD		TXEMP_EV	DMA_EV	MS_EV	LS_EV/TXHLT_EV	TXLDL_EV	RXHDL_EV

Downloaded from Arrow.com.

EIR Extended Mode Bit Descriptions

Bit	Name	Description
7:6	RSVD	**Reserved.** Read as 0.
5	TXEMP_EV	**Transmitter Empty Event.** This bit is the same as bit 6 of the LSR (Bank 0 I/O Offset 05h[6]). It is set to 1 when the transmitter is empty. (Default = 1)
4	DMA_EV	**DMA Event.** This bit is set to 1 when a DMA terminal count is activated. It is cleared upon read.
3	MS_EV	**Modem Status Event.** • In UART mode: — This bit is set to 1 when Bank 0 I/O Offset 06h[3:0] is set to 1. • In any IR mode: — The function of this bit depends on the setting of the IRMSSL bit (Bank 3 I/O Offset 04h[1]). When IRMSSL is 0, the bit functions as a modem status interrupt event; when IRMSSL is set to 1, the bit is forced to 0.
2	LS_EV/TXHLT_EV	**Link Status Event** • In UART, Sharp-IR and SIR: — This bit is set to 1 when a receiver error or break condition is reported. When FIFOs are enabled, the parity error, frame error and break conditions are reported only when the associated character reaches the bottom of the RX_FIFO. An overrun error is reported as soon as it occurs. **Link Status Event or Transmitter Halted Event** • In CEIR: — Set to 1 when the receiver is overrun or the transmitter underrun. **Note:** A high speed CPU can service the interrupt generated by the last frame byte reaching the RX_FIFO bottom before that byte is transferred to memory by the DMA controller. This can happen when the CPU interrupt latency is shorter than the RX_FIFO timeout. A DMA request is generated only when the RX_FIFO level reaches the DMA threshold or when a FIFO timeout occurs, in order to minimize the performance degradation due to DMA signal handshake sequences. If the DMA controller must be set up before receiving each frame, the software in the interrupt routine should make sure that the last byte of the frame received has been transferred to memory before reinitializing the DMA controller, otherwise that byte could appear as the first byte of the next frame received.
1	TXLDL_EV	**Transmitter Low-Data-Level Event.** (Default = 1) • FIFOs disabled: — Set to 1 when the transmitter holding register is empty. • FIFOs enabled: — Set to 1 when the TX_FIFO level is below the threshold level.
0	RXHDL_EV	**Receiver High-Data-Level Event.** • FIFOs disabled: — Set to 1 when a character is in the receiver holding register. • FIFOs enabled: — Set to 1 when the RX_FIFO is equal to or above threshold or an RX_FIFO timeout has occurred.

Downloaded from Arrow.com.

EIR Register, Non-Extended Mode (EXCR1.EXT_SL = 0)

In non-extended UART mode, the functional block prioritizes interrupts into four levels. The EIR register indicates the highest level of interrupt that is pending. See Table 6-36 for the encoding of these interrupts.

EIR Non-Extended Mode Register Map

7	6	5	4	3	2	1	0
FEN1	FEN0	RSVD		RXFT	IPR1	IPR0	IPF

EIR Non-Extended Mode Bit Descriptions

Bit	Name	Description
7:6	FEN[1:0]	**FIFOs Enabled.** 00: No FIFO enabled. (Default) 11: FIFOs enabled (bit 0 of FCR = 1). 01, 10: Reserved.
5:4	RSVD	**Reserved.** Write to 0.
3	RXFT	**RX_FIFO Timeout.** In the 16450 mode, this bit is always 0. In the 16550 mode (FIFOs enabled), this bit is set to 1 when an RX_FIFO read timeout has occurred and the associated interrupt is currently the highest priority pending interrupt.
2:1	IPR[1:0]	**Interrupt Priority.** When IPF (bit 0) is 0, these bits indicate the pending interrupt with the highest priority. (Default = 00). See Table 6-36.
0	IPF	**Interrupt Pending Flag.** 0: Interrupt pending. 1: No interrupt pending. (Default)

Table 6-36. EIR Non-Extended Mode Interrupt Priorities

EIR Bits[3:0]	Priority Level	Interrupt Type	Interrupt Source	Interrupt Reset Control
0001	N/A	None	None	N/A
0110	Highest	Link Status	Parity error, framing error, data overrun or break event.	Read Link Status Register (LSR).
0100	Second	Receiver High Data Level Event	Receiver Holding Register (RXD) is full, or RX_FIFO level is equal to or above the threshold.	Reading the RXD or RX_FIFO level drops below threshold.
1100	Second	RX_FIFO Timeout	At least one character is in the RX_FIFO, and no character has been input to or read from the RX_FIFO for four character times.	Reading the RXD port.
0010	Third	Transmitter Low Data Level Event	Transmitter Holding Register or TX_FIFO empty.	Reading the Event Identification Register (EIR) if this interrupt is currently the highest priority pending interrupt, or writing into the TXD port.
0000	Fourth	Modem Status	Any transition on CTS, DSR or DCD or a high-to-low transition on RI.	Reading the Modem Status Register (MSR).

Downloaded from Arrow.com.

FIFO Control Register (FCR)

I/O Offset 02h
Type WO
Reset Value 00h

The FIFO Control register is used to enable the FIFOs, clear the FIFOs and set the interrupt threshold levels for the RX_FIFO and TX_FIFO. The FCR can be read through SH_FC in Bank 3, I/O Offset 02h (see Section 6.12.6.3 on page 436).

FCR Register Map

7	6	5	4	3	2	1	0
RXFTH		TXFTH		RSVD	TXSR	RXSR	FIFO_EN

FCR Bit Descriptions

Bit	Name	Description
7:6	RXFTH	**RX_FIFO Interrupt Threshold Level.** These bits select the RX_FIFO interrupt threshold level. An interrupt is generated when the level of data in the RX_FIFO is equal to or above the encoded threshold. **RX_FIFO Interrupt Threshold Level** **(16-Level FIFO) (32-Level FIFO)** 00: 1 (Default) 1 (Default) 01: 4 8 10: 8 16 11: 14 26
5:4	TXFTH[1:0]	**TX_FIFO Interrupt Threshold Level.** In non-extended modes, these bits have no effect. In extended modes, these bits select the TX_FIFO interrupt threshold level. An interrupt is generated when the level of data in the TX_FIFO drops below the encoded threshold. **TX_FIFO Interrupt Threshold Level** **(16-Level FIFO) (32-Level FIFO)** 00: 1 (Default) 1 (Default) 01: 3 7 10: 9 17 11: 13 25
3	RSVD	**Reserved.** Write to 0.
2	TXSR	**Transmitter Soft Reset.** Writing a 1 to this bit generates a transmitter soft reset that clears the TX_FIFO and the transmitter logic. This bit is automatically cleared by the hardware.
1	RXSR	**Receiver Soft Reset.** Writing a 1 to this bit generates a receiver soft reset that clears the RX_FIFO and the receiver logic. This bit is automatically cleared by the hardware.
0	FIFO_EN	**FIFO Enable.** When set to 1, this bit enables both the TX_FIFO and RX_FIFOs. Resetting this bit clears both FIFOs. In CEIR mode, the FIFOs are always enabled and the setting of this bit is ignored.

Downloaded from Arrow.com.

6.12.3.4 Link Control/Bank Select Registers

These registers share the same address. The Link Control Register (LCR) selects the communication format for data transfers in UART, SIR and Sharp-IR modes. The Bank Select Register (BSR) is used to select the register bank to be accessed next.

Reading the register at this address location returns the content of the BSR register. The content of LCR register can be read from the Shadow of Link Control register (SH_LC) in Bank 3, I/O Offset 01h (see Section 6.12.6.2 on page 435). During a write operation to this register at this address location, setting of Bank Select Enable (bit 7) determines the register to be accessed, as follows:

- If bit 7 is 0, both LCR and BSR are written into.
- If bit 7 is 1, only the BSR register is written to and the LCR register remains unchanged. This prevents the communication format from being spuriously affected when a bank other than Bank 0 or 1 is accessed.

Link Control Register (LCR)

I/O Offset 03h
Type WO
Reset Value 00h

Bits [6:0] are only effective in UART, Sharp-IR and SIR modes. They are ignored in CEIR mode.

LCR Register Map

7	6	5	4	3	2	1	0
BKSE	SBRK	STKP	EPS	PEN	STB	WLS[1:0]	

LCR Bit Descriptions

Bit	Name	Description
7	BKSE	**Bank Select Enable.** 0: Register functions as the Link Control Register (LCR). 1: Register functions as the Bank Select Register (BSR).
6	SBRK	**Set Break.** Enables or disables a break. During the break, the transmitter can be used as a character timer to accurately establish the break duration. This bit acts only on the transmitter front end and has no effect on the rest of the transmitter logic. When set to 1, the following occurs: — If UART mode is selected, the UART[x]_TX pin is forced to a logic 0 state. — If SIR mode is selected, pulses are issued continuously on the UART[x]_IR_TX pin. — If Sharp-IR mode is selected and internal modulation is enabled, pulses are issued continuously on the UART[x]_IR_TX pin. — If Sharp-IR mode is selected and internal modulation is disabled, the UART[x]_IR_TX pin is forced to a logic 1 state. To avoid transmission of erroneous characters as a result of the break, use the following procedure: — Wait for the transmitter to be empty (TXEMP = 1). — Set SBRK to 1. — Wait for the transmitter to be empty, and clear SBRK to restore normal transmission.
5	STKP	**Stick Parity.** When parity is enabled (bit 3 = 1), this bit and EPS (bit 4) control the parity bit (see Table 6-37 on page 421). This bit has no effect when parity is not enabled.
4	EPS	**Even Parity Select.** When parity is enabled (bit 3 = 1), this bit and STKP (bit 5) control the parity bit (see Table 6-37 on page 421). This bit has no effect when parity is not enabled.
3	PEN	**Parity Enable.** This bit enables the parity bit. The parity enable bit is used to produce an even or odd number of 1s when the data bits and parity bit are summed, as an error detection device. 0: No parity bit is used (Default). 1: A parity bit is generated by the transmitter and checked by the receiver.

Downloaded from Arrow.com.

LCR Bit Descriptions (Continued)

Bit	Name	Description
2	STB	**Stop Bits.** This bit specifies the number of stop bits transmitted with each serial character. 0: One stop is bit generated. (Default) 1: If the data length is set to 5 bits via bits [1:0], 1.5 stop bits are generated. For 6-, 7- or 8-bit WORD lengths, 2 stop bits are transmitted. The receiver checks for 1 stop bit only, regardless of the number of stop bits selected.
1:0	WLS[1:0]	**Character Length Select [1:0].** These bits specify the number of data bits in each transmitted or received serial character. 00: 5 (Default) 01: 6 10: 7 11: 8

Table 6-37. Bit Settings for Parity Control

PEN	EPS	STKP	Selected Parity Bit
0	x	x	None
1	0	0	Odd
1	1	0	Even
1	0	1	Logic 1
1	1	1	Logic 0

Downloaded from Arrow.com.

Bank Select Register (BSR)

I/O Offset 03h
Type R/W
Reset Value 00h

The BSR register selects the next register bank to be accessed. For details on how to access this register, see the bit description for BKSE (bit 7). The register map and bit descriptions are applicable for all banks.

BSR Register Map

7	6	5	4	3	2	1	0
BKSE	BSR						

BSR Bit Descriptions

Bit	Name	Description
7	BKSE	**Bank Select Enable.** 0: Bank 0 selected. 1: Bits [6:0] specify the selected bank (see Table 6-38).
6:0	BSR	**Bank Select.** When bit 7 is set to 1, these bits select the bank (see Table 6-38).

Table 6-38. Bank Select Encoding

BSR Bits								Bank Selected
7	6	5	4	3	2	1	0	
0	x	x	x	x	x	x	x	0
1	0	x	x	x	x	x	x	1
1	1	x	x	x	x	1	x	1
1	1	x	x	x	x	x	1	1
1	1	1	0	0	0	0	0	2
1	1	1	0	0	1	0	0	3
1	1	1	0	1	0	0	0	4
1	1	1	0	1	1	0	0	5
1	1	1	1	0	0	0	0	6
1	1	1	1	0	1	0	0	7
1	1	1	1	1	x	0	0	Reserved
1	1	0	x	x	x	0	0	Reserved

Downloaded from Arrow.com.

6.12.3.5 Modem/Mode Control Register (MCR)

I/O Offset 04h
Type R/W
Reset Value 00h

The MCR controls the virtual interface with the modem or data communications set in loopback mode, and the device operational mode when the device is in the extended mode. This register function differs for extended and non-extended modes. Modem control pins are not available and are replaced with the virtual interface (except RTS and DTR signals) controlled by software only through MSR_UART[x]_MOD (see Section 6.12.1.1 on page 410).

MCR, Extended Mode (EXCR1.EXT_SL = 1)

In extended mode, this register is used to select the operation mode (IrDA, Sharp, etc.) of the device and enable the DMA interface. In these modes, the interrupt output signal is always enabled, and loopback can be enabled by setting bit 4 of EXCR1. Bits [7:2] should always be initialized when the operation mode is changed from non-extended to extended.

MCR Extended Mode Register Map

7	6	5	4	3	2	1	0
MDSL			RSVD	TX_DFR	DMA_EN	RTS	DTR

MCR Extended Mode Bit Descriptions

Bit	Name	Description
7:5	MDSL	**Mode Select.** These bits select the operation mode of the functional block when in extended mode. When the mode is changed, the TX_FIFO and RX_FIFOs are flushed, Link Status and Modem Status Interrupts are cleared, and all of the bits in the Auxiliary Status and Control register are cleared. 000: UART (Default) 001: Reserved 010: Sharp-IR 011: SIR 100: Reserved 101: Reserved 110: CEIR 111: Reserved
4	RSVD	**Reserved.** Write as 0.
3	TX_DFR	**Transmit Deferral.** For a detailed description of the transmit deferral see Section 5.12.1.6 "Transmit Deferral" on page 140. This bit is effective only if the TX_FIFO is enabled (Bank 0 I/O Offset 02h[0] = 1). 0: No transmit deferral enabled. (Default) 1: Transmit deferral enabled.
2	DMA_EN	**DMA Enable.** When set to1, DMA mode of operation is enabled. When DMA is selected, transmit and/or receive interrupts should be disabled to avoid spurious interrupts. DMA cycles always address the Data Holding registers or FIFOs, regardless of the selected bank. 0: DMA mode disabled. (Default) 1: DMA mode enabled.
1	RTS	**Request To Send.** When LOOP is enabled (Bank 2, I/O Offset 02h[4] = 1), this bit internally drives both CTS and DCD (Bank 0 I/O Offset 06h[4,7]). Otherwise it is unused.
0	DTR	**Data Terminal Ready.** When LOOP is enabled (Bank 2, I/O Offset 02h[4] = 1), this bit internally drives both DSR and RI (Bank 0 I/O Offset 06h[5,6]). Otherwise it is unused.

Downloaded from Arrow.com.

MCR, Non-Extended Mode (EXCR1.EXT_SL = 0)

MCR Non-Extended Mode Register Map

7	6	5	4	3	2	1	0
RSVD			LOOP	ISEN or DCDLP	RILP	RTS	DTR

MCR Non-Extended Mode Bit Descriptions

Bit	Name	Description
7:5	RSVD	**Reserved.** Must written as 0.
4	LOOP	**Loopback Enable.** This bit accesses the same internal register as LOOP (Bank 2, I/O Offset 02h[4] = 1). (See Section 6.12.5.2 on page 430 for more information on loopback mode). 0: Loopback disabled. (Default) 1: Loopback enabled.
3	ISEN or DCDLP	**Interrupt Signal Enable or DCD Loopback.** In normal operation (standard 16450 or 16550) mode, this bit controls the interrupt signal and must be set to 1 in order to enable the interrupt request signal. In loopback mode, this bit internally drives DCD Bank 0 I/O Offset 06h[7], and the interrupt signal is always enabled.
2	RILP	**Ring Indicator in Loopback.** When loopback is enabled, this bit internally drives RI (Bank 0 I/O Offset 06h[6]. Otherwise, it is unused.
1	RTS	**Request To Send.** When loopback is enabled, this bit drives CTS (Bank 0 I/O Offset 06h[4] internally. Otherwise, it is unused.
0	DTR	**Data Terminal Ready.**When loopback is enabled, this bit internally drives DSR (Bank 0 I/O Offset 06h[5]. Otherwise, it is unused.

6.12.3.6 Link Status Register (LSR)

I/O Offset 05h
Type RO
Reset Value 60h

The LSR provides status information concerning data transfer. Upon reset, this register assumes the value of 60h. The bit definitions change depending upon the operation mode of the functional block.

Bits [4:1] of the LSR indicate link status events. These bits are sticky (accumulate any conditions occurred since the last time the register was read). They are cleared when one of the following events occurs:

- Hardware reset
- Receiver soft reset (via the FIFO Control register)
- LSR read

The LSR is intended for read operations only. Writing to the LSR is not permitted.

LSR Map

7	6	5	4	3	2	1	0
ER_INF	TXEMP	TXRDY	BRK	FE	PE	OE	RXDA

LSR Bit Descriptions

Bit	Name	Description
7	ER_INF	**Error in RX_FIFO.** In UART, Sharp-IR, and SIR modes, this bit is set to 1 if there is at least one framing error, parity error, or break indication in the RX_FIFO. This bit is always 0 in 16450 mode. It is cleared upon read or upon reset if there is no faulted byte in RX_FIFO.

Downloaded from Arrow.com.

LSR Bit Descriptions (Continued)

Bit	Name	Description
6	TXEMP	**Transmitter Empty.** This bit is set to 1 when the transmitter holding register or the TX_FIFO is empty, and the transmitter front end is idle.
5	TXRDY	**Transmitter Ready.** This bit is set to 1 when the transmitter holding register or the TX_FIFO is empty. It is cleared when a data character is written to the TXD register.
4	BRK	**Break Event Detected.** In UART, Sharp-IR, and SIR modes, this bit is set to 1 when a break event is detected (i.e., when a sequence of logic 0 bits, equal or longer than a full character transmission, is received). If the FIFOs are enabled, the break condition is associated with the particular character in the RX_FIFO to which it applies. In this case, the BRK bit is set when the character reaches the bottom of the RX_FIFO. When a break event occurs, only one 0 character is transferred to the receiver holding register or the RX_FIFO. The next character transfer takes place after at least one logic 1 bit is received, followed by a valid start bit. This bit is cleared upon read.
3	FE	**Framing Error.** In UART, Sharp-IR and SIR modes, this bit is set to 1 when the received data character does not have a valid stop bit (i.e., the stop bit following the last data bit or parity bit is a 0). If the FIFOs are enabled, this Framing Error is associated with the particular character in the FIFO it applies to. This error is revealed to the CPU when its associated character is at the bottom of the RX_FIFO. After a framing error is detected, the receiver will try to resynchronize. The receiver assumes that framing error (the erroneous stop bit) is the next start bit (the erroneous stop bit) and shifts in the new character. This bit is cleared upon a read.
2	PE	**Parity Error.** In UART, Sharp-IR, and SIR modes, this bit is set to 1 if the received data character does not have the correct parity, even or odd, as selected by the parity control bits of the LCR. If the FIFOs are enabled, this error is associated with the particular character in the FIFO that it applies to. This error is revealed to the CPU when its associated character is at the bottom of the RX_FIFO. This bit is cleared upon read.
1	OE	**Overrun Error.** In UART, Sharp-IR, and SIR modes, this bit is set to 1 as soon as an overrun condition is detected by the receiver. It is cleared upon read. FIFOs Disabled: An overrun occurs when a new character is completely received into the receiver front end section and the CPU has not yet read the previous character in the receiver holding register. The new character overwrites the previous character in the receiver holding register. FIFOs Enabled: An overrun occurs when a new character is completely received into the receiver front end section and the RX_FIFO is full. The new character is discarded, and the RX_FIFO is not affected.
0	RXDA	**Receiver Data Available.** This bit is set to 1 when the receiver holding register is full. If the FIFOs are enabled, this bit is set when at least one character is in the RX_FIFO. It is cleared when the CPU reads all the data in the holding register or the RX_FIFO.

Downloaded from Arrow.com.

6.12.3.7 Modem Status Register (MSR)

I/O Offset 06h
Type RO
Reset Value x0h

The function of this register depends on the selected operational mode. When a UART mode is selected, this register provides the current state as well as state-change information of the status lines from the modem or data transmission module.

When any of the IR modes is selected, the register function is controlled by the setting of IRMSSL (Bank 3 I/O Offset 04h[1]). If IRMSSL is 0, the MSR register works as in UART mode. If IRMSSL is 1, the MSR returns the value 30h, regardless of the state of the modem input lines.

When loopback is enabled, the MSR works similarly except that its status input signals are internally driven by appropriate bits in the MCR (Bank 0 I/O Offset 04h) since the modem input lines are internally disconnected. Refer to bits [1:0] in MCR extended mode or bits [3:0] in MCR non-extended mode (see Section 6.12.3.5 on page 423) and to the LOOP and ETDLBK bits in EXCR1 (Bank 2 I/O Offset 02h[4, 5]).

A Modem Status Event (MS_EV) is generated if the MS_IE bit in the IER (Bank 0 I/ O Offset 01h[3]) is enabled and any of bits [3:0] in this register are set to 1. Bits [3:0] are cleared to 0 as a result of any of the following events:

- A hardware reset occurs.
- The operational mode is changed and IRMSSL (Bank 3 I/O Offset 04h[1]) = 0.
  — The MSR is read.

In the reset state, bits [7:4] are indeterminate as they reflect their corresponding signal levels at MSR_UART[x]_MOD.

MSR Map

7	6	5	4	3	2	1	0
DCD	RI	DSR	CTS	DDCD	TERI	DDSR	DCTS

MSR Bit Descriptions

Bit	Name	Description
7	DCD	**Data Carrier Detect.** This is the status of MSR 51400038h[5] and 5140003Ch[5].
6	RI	**Ring Indicator.** This is the status of MSR 51400038h[7] and 5140003Ch[7].
5	DSR	**Data Set Ready.** This is the status of MSR 51400038h[6] and 5140003Ch[6].
4	CTS	**Clear To Send.** This is the status of MSR 51400038h[4] and 5140003Ch[4].
3	DDCD	**Delta Data Carrier Detect.** When high, this bit indicates that the DCD input has changed state. Reading this register causes this bit to be cleared.
2	TERI	**Trailing Edge Ring Indicator.** When high, this bit indicates that the RI input has changed from a high to low state. Reading this register causes this bit to be cleared.
1	DDSR	**Delta Data Set Ready.** When high, this bit indicates that the DSR input has changed state since the last time it was read by the CPU. Reading this register causes this bit to be cleared.
0	DCTS	**Delta Clear To Send.** When high, this bit indicates that the CTS input has changed state since the last time it was read by the CPU. Reading this register causes this bit to be cleared.

Downloaded from Arrow.com.

6.12.3.8 Scratchpad/Auxiliary Status and Control Registers (SPR)/(ASCR)

The SP and ASC registers share the same address.

Scratchpad Register (SP)

I/O Offset 07h
Type R/W
Reset Value 00h

This register is accessed when the device is in non-extended mode (Bank 2 I/O Offset 02h[0] = 0). This is a scratchpad register for temporary data storage.

Auxiliary Status and Control Register (ASC)

I/O Offset 07h
Type R/W
Reset Value 00h

The ASC register is accessed when the extended mode (Bank 2 I/O Offset 02h[0] = 1) of operation is selected. The definition of the bits in this case is dependent upon the mode selected in the Bank 0 I/O Offset 04h[7:5]. This register is cleared upon hardware reset. Bit 2 is also cleared when the transmitter is “soft reset” (via the FIFO Control register) or after the S_EOT byte is transmitted. Bit 6 is also cleared when the transmitter is “soft reset” or by writing 1 into it. Bits [0,1,4,5] are also cleared when the receiver is “soft reset” (via the FIFO Control register (Bank 0 I/O Offset 02h)).

ASC Extended Mode Register Map

7	6	5	4	3	2	1	0
RSVD	TXUR	RXACT	RXWDG	RSVD	S_EOT	RSVD	RXF_TOUT

ASC Extended Mode Bit Descriptions

Bit	Name	Description
7	RSVD	**Reserved.** Write as 0.
6	TXUR	**IR Transmitter Underrun.** For CEIR mode only. This bit is set to 1 when a transmitter underrun occurs. It is always cleared when a mode other than CEIR is selected. This bit must be cleared, by writing a 1 into it to re-enable transmission.
5	RXACT	**Receiver Active.** For CEIR mode only. This bit is set to 1 when an IR pulse or pulse-train is received. If a 1 is written into this bit position, the bit is cleared and the receiver deactivated. When this bit is set, the receiver samples the IR input continuously at the programmed baud and transfers the data to the RX_FIFO.
4	RXWDG	**Reception WATCHDOG.** For CEIR mode only. This bit is set to 1 each time a pulse or pulse-train (modulated pulse) is detected by the receiver. It can be used by the software to detect a receiver idle condition. It is cleared upon read.
3	RSVD	**Reserved.** Write as 0.
2	S_EOT	**Set End of Transmission.** For CEIR mode only. When a 1 is written into this bit position before writing the last character into the TX_FIFO, data transmission is properly completed. If the CPU simply stops writing data into the TX_FIFO at the end of the data stream, a transmitter underrun is generated and the transmitter stops. In this case this is not an error, but the software must clear the underrun before the next transmission can occur. This bit is automatically cleared by hardware when a character is written to the TX_FIFO.
1	RSVD	**Reserved.** Write as 0.
0	RXF_TOUT (RO)	**RX_FIFO Timeout (Read Only).** This bit is set to 1 if the RX_FIFO is below threshold and an RX_FIFO timeout occurs. It is cleared when a character is read from the RX_FIFO.

Downloaded from Arrow.com.

6.12.4 Bank 1 Register Descriptions

The bit formats of the registers in Bank 1 are summarized in Table 6-39. Detailed descriptions of each register follow.

Table 6-39. Bank 1 Bit Map

Register		Bits							
I/O Offset	Name	7	6	5	4	3	2	1	0
00h	LBGD_L	LBGD[7:0]							
01h	LBGD_H	LBGD[15:8]							
02h	RSVD	RSVD							
03h	LCR	BKSE	SBRK	STKP	EPS	PEN	STB	WLS1	WLS0
	BSR	BKSE	BSR[6:0]						
04-07h	RSVD	RSVD							

6.12.4.1 Legacy Baud Generator Divisor Port

Legacy Baud Generator Divisor Low Byte (LBGD_L)

I/O Offset 00h
Type R/W
Reset Value xxh

Legacy Baud Generator Divisor High Byte (LBGD_H)

I/O Offset 01h
Type R/W
Reset Value xxh

The Legacy Baud Generator Divisor (LBGD) port provides an alternate data path to the Baud Divisor Generator register. LBGD is a 16-bit wide port split into two bytes, LBGD_L an LBGD_H, occupying consecutive address locations. This port is implemented to maintain compatibility with 16550 standard and to support existing legacy software packages. New software should use the BGD port in Bank 2 to access the baud generator divisor register.

The programmable baud rates in the non-extended mode are achieved by dividing a 24 MHz clock by a prescale value of 13, 1.625 or 1. This prescale value is selected by the PRESL field (Bank 2 I/O Offset 04h[5:4]).

Divisor values between 1 and 2^{16}-1 can be used (0 cannot be used, see Table 6-41 "Baud Generator Divisor Settings" on page 429). The baud generator divisor must be loaded during initialization to ensure proper operation of the baud generator. Upon loading either part of it, the baud generator counter is immediately loaded. Table 6-41 on page 429 shows typical baud divisors. After reset, the divisor register contents are indeterminate.

If the UART is in extended mode, any access to the LBGD_L or LBGD_H causes a reset to the default non-extended mode (i.e., 16550 mode). To access a baud generator divisor when in extended mode, use the port pair in Bank 2 (see Section 6.12.5.1 "Baud Generator Divisor Port" on page 430).

Table 6-40 shows the bits that are cleared when fallback occurs during extended or non-extended modes. If the UART is in non-extended mode and the LOCK bit is 1, the content of the BGD port is not be effected and no other action is taken.

Table 6-40. Bits Cleared on Fallback

Register Name	UART Mode and LOCK Bit before Fallback		
	Extended Mode LOCK = x	Non-Extended Mode LOCK = 0	Non-Extended Mode LOCK = 1
MCR	2 to 7	None	None
EXCR1	0, 5 and 7	5 and 7	None
EXCR2	0 to 5	0 to 5	None
IRCR1	2 and 3	None	None

Downloaded from Arrow.com.

Table 6-41. Baud Generator Divisor Settings

Prescaler Value	13		1.625		1	
Baud	**Divisor**	**% Error**	**Divisor**	**% Error**	**Divisor**	**% Error**
50	2304	0.16%	18461	0.00%	30000	0.00%
75	1536	0.16%	12307	0.01%	20000	0.00%
110	1047	0.19%	8391	0.01%	13636	0.00%
134.5	857	0.10%	6863	0.00%	11150	0.02%
150	768	0.16%	6153	0.01%	10000	0.00%
300	384	0.16%	3076	0.03%	5000	0.00%
600	192	0.16%	1538	0.03%	2500	0.00%
1200	96	0.16%	769	0.03%	1250	0.00%
1800	64	0.16%	512	0.16%	833	0.04%
2000	58	0.53%	461	0.12%	750	0.00%
2400	48	0.16%	384	0.16%	625	0.00%
3600	32	0.16%	256	0.16%	416	0.16%
4800	24	0.16%	192	0.16%	312	0.16%
7200	16	0.16%	128	0.16%	208	0.16%
9600	12	0.16%	96	0.16%	156	0.16%
14400	8	0.16%	64	0.16%	104	0.16%
19200	6	0.16%	48	0.16%	78	0.16%
28800	4	0.16%	32	0.16%	52	0.16%
38400	3	0.16%	24	0.16%	39	0.16%
57600	2	0.16%	16	0.16%	26	0.16%
115200	1	0.16%	8	0.16%	13	0.16%
230400	---	---	4	0.16%	---	---
460800	---	---	2	0.16%	---	---
750000	---	---	---	---	2	0.00%
921600	---	---	1	0.16%	---	---
1500000	---	---	---	---	1	0.00%

6.12.4.2 Link Control/Bank Select Register (LCR/BSR)

These registers share the same address and are the same as the registers at I/O Offset 03h in Bank 0.

Link Control Register (LCR)

I/O Offset 03h
Type RW
Reset Value 00h

See Section 6.12.3.4 "Link Control/Bank Select Registers" on page 420 for bit descriptions.

Bank Selection Encoding Register (BSR)

I/O Offset 03h
Type R/W
Reset Value 00h

See Section 6.12.3.4 "Link Control/Bank Select Registers" on page 420 for bit descriptions.

Downloaded from Arrow.com.

6.12.5 Bank 2 Register Descriptions

The bit formats for the registers in Bank 2 are summarized in Table 6-42. Detailed descriptions of each register follow.

Table 6-42. Bank 2 Bit Map

Register		Bits							
I/O Offset	Name	7	6	5	4	3	2	1	0
00h	BGD_L	BGD[7:0]							
01h	BGD_H	BGD[15:8]							
02h	EXCR1	RSVD		EDTLBK	LOOP	DMASWP	DMATH	DMANF	EXT_SL
03h	BSR	BKSE	BSR[6:0]						
04h	EXCR2	LOCK	RSVD	PRESL[1:0]		RF_SIZ[1:0]		TF_SIZ1[1:0]	
05h	RSVD	RSVD							
06h	TXFLV	RSVD		TFL[5:0]					
07h	RXFLV	RSVD		RFL[5:0]					

6.12.5.1 Baud Generator Divisor Port

Baud Generator Divisor Low Byte (BGD_L)

I/O Offset 00h
Type R/W
Reset Value xxh

Baud Generator Divisor High Byte (BGD_H)

I/O Offset 01h
Type R/W
Reset Value xxh

This port performs the same function as the LBGD port in Bank 1 and is accessed identically, but does not change the operation mode of the functional block when accessed. See Section 6.12.4.1 "Legacy Baud Generator Divisor Port" on page 428 for more details.

Use this port to set the baud when operating in extended mode to avoid fallback to a non-extended operation mode (i.e., 16550 compatible). When programming the baud, writing to BGD_H causes the baud to change immediately.

6.12.5.2 Extended Control Register 1 (EXCR1)

I/O Offset 02h
Type R/W
Reset Value 00h

Use this register to control operation in the extended mode. Upon reset, all bits are set to 0.

EXCR1 Register Map

7	6	5	4	3	2	1	0
RSVD		EDTLBK	LOOP	DMASWP	DMATH	DMANF	EXT_SL

EXCR1 Bit Descriptions

Bit	Name	Description
7:6	RSVD	**Reserved.** Write as 0.
5	EDTLBK	**Enable Transmitter During Loopback.** When this bit is set to 1, the transmitter serial output is enabled and functions normally when loopback is enabled.

Downloaded from Arrow.com.

EXCR1 Bit Descriptions (Continued)

Bit	Name	Description
4	LOOP	**Loopback Enable.** During loopback, the transmitter output is connected internally to the receiver input to enable system self-test of serial communication. In addition to the data signal, all additional signals within the UART are interconnected to enable real transmission and reception using the UART mechanisms. When this bit is set to 1, loopback is selected. This bit accesses the same internal register as bit 4 in the MCR, when the UART is in a non-extended mode. Loopback behaves similarly in both non-extended and extended modes. When extended mode is selected, the DTR bit (Bank 0 I/O Offset 04h[0]) internally drives both DSR and RI (BANK 0 I/O Offset 06h[5,6]), and the RTS bit (Bank 0 I/O Offset 04h[1]) drives CTS and DCD (BANK 0 I/O Offset 06h[4,7]). During loopback, the following occurs: • The transmitter and receiver interrupts are fully operational. The modem status interrupts are also fully operational, but the interrupt sources are now the lower bits of the MCR. Modem interrupts in IR modes are disabled unless the IRMSSL bit of the IRCR2 is 0. Individual interrupts are still controlled by the IER register bits. • The DMA control signals are fully operational. • UART and IR receiver serial input signals are disconnected. The internal receiver input signals are connected to the corresponding internal transmitter output signals. • The UART transmitter serial output is forced high and the IR transmitter serial output is forced low, unless the ETDLBK bit is set to 1, in which case they function normally. • The virtual modem signals of MSR_UART[x]_MOD register (DSR, CTS, RI and DCD) are disconnected. The internal modem status signals are driven by the lower bits of the MCR.
3	DMASWP	**DMA Swap.** This bit selects the routing of the DMA control signals between the internal DMA logic and configuration module of the chip. When this bit is 0, the transmitter and receiver DMA control signals are not swapped. When it is 1, they are swapped. A block diagram illustrating the control signals routing is shown in Figure 6-2 "DMA Control Signals Routing" on page 432. The swap feature is particularly useful when only one 8237 DMA channel is used to serve both transmitter and receiver. In this case, only one external DMA Request/DMA Acknowledge pair is interconnected to the swap logic by the configuration module. Routing the external DMA channel to either the transmitter or receiver DMA logic is then controlled by the DMASWP bit. This way, the IR device drivers do not need to know the details of the configuration module.
2	DMATH	**DMA FIFO Threshold.** This bit selects the TX_FIFO and RX_FIFO threshold levels used by the DMA request logic to support demand transfer mode. A transmission DMA request is generated when the TX_FIFO level is below the threshold. A reception DMA request is generated when the RX_FIFO level reaches the threshold or when an RX_FIFO timeout occurs. Table 6-43 lists the threshold levels for each FIFO.
1	DMANF	**DMA Fairness Control.** This bit controls the maximum duration of DMA burst transfers. 0: DMA requests forced inactive after approximately 10.5 µs of continuous transmitter and/or receiver DMA operation (Default) 1: TX-DMA request is deactivated when the TX_FIFO is full. An RX DMA request is deactivated when the RX_FIFO is empty.
0	EXT_SL	**Extended Mode Select.** When set to 1, extended mode is selected.

Downloaded from Arrow.com.

Table 6-43. DMA Threshold Levels

Bit Value	DMA Threshold for FIFO Type		
	RX_FIFO	TX_FIFO	
		16 Levels	32 Levels
0	4	13	29
1	10	7	23

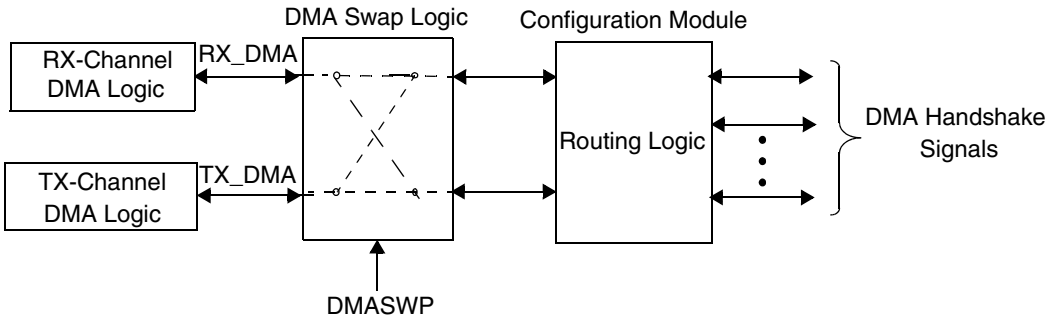

Figure 6-2. DMA Control Signals Routing

Downloaded from Arrow.com.

6.12.5.3 Bank Select Register (BSR)

I/O Offset 03h
Type R/W
Reset Value 00h

This register is the same as the BSR register at Bank 0 I/O Offset 03h. See Section 6.12.3.4 "Link Control/Bank Select Registers" on page 420 for bit descriptions.

6.12.5.4 Extended Control Register 2 (EXCR2)

I/O Offset 04h
Type R/W
Reset Value 00h

The EXCR2 register configures the RX_FIFO and TX_FIFO sizes and the value of the prescaler, and controls the baud divisor register lock. Upon reset, all bits are set to 0.

EXCR2 Register Map

7	6	5	4	3	2	1	0
LOCK	RSVD	PRESL[1:0]		RF_SIZ[1:0]		TF_SIZ[1:0]	

EXCR2 Bit Descriptions

Bit	Name	Description
7	LOCK	**Baud Divisor Register Lock.** When set to 1, any access to the baud generator divisor register through LBGD_L and LBGD_H, as well as fallback are disabled from non-extended mode. In this case, two scratchpad registers overlaid with LBGD_L and LBGD_H are enabled, and any attempted CPU access of the baud generator divisor register through LBGD_L and LBGD_H access the scratchpad registers instead. This bit must be set to 0 when extended mode is selected.
6	RSVD	**Reserved.** Write as 0.
5:4	PRESL[1:0]	**Prescaler Select.** The prescaler divides the 24 MHz input clock frequency to provide the clock for the baud generator. 00: 13 (Default) 01: 1.625 10: Reserved 11: 1.0
3:2	RF_SIZ[1:0]	**RX_FIFO Levels Select.** These bits select the number of levels for the RX_FIFO. They are effective only when the FIFOs are enabled. (Bank 0 I/O Offset 02h[0] = 1.) 00: 16 (Default) 01: 32 1x: Reserved
1:0	TF_SIZ[1:0]	**TX_FIFO Levels Select.** These bits select the number of levels for the TX_FIFO. They are effective only when the FIFOs are enabled. (Bank 0 I/O Offset 02h[0] = 1.) 00: 16 (Default) 01: 32 1x: Reserved

Downloaded from Arrow.com.

6.12.5.5 TX_FIFO Current Level Register (TXFLV)

I/O Offset 06h
Type RO
Reset Value 00h

The TXFLV register returns the number of bytes in the TX_FIFO.

TXFLV Register Map

7	6	5	4	3	2	1	0
RSVD		TFL[5:0]					

TXFLV Bit Descriptions

Bit	Name	Description
7:6	RSVD	**Reserved.** Returns 0.
5:0	TFL[5:0]	**Number of Bytes in TX_FIFO.** These bits specify the number of bytes in the TX_FIFO. **Note:** The contents of TXFLV and RXFLV are not frozen during CPU reads. Therefore, invalid data could be returned if the CPU reads these registers during normal transmitter and receiver operation. To obtain correct data, the software should perform three consecutive reads and then take the data from the second read if the first and second reads yield the same result. It can also be taken from the third read if the first and second reads yield different results.

6.12.5.6 RX_FIFO Current Level Register (RXFLV)

I/O Offset 07h
Type RO
Reset Value 00h

The RXFLV register returns the number of bytes in the RX_FIFO. It can be used for software debugging.

RXFLV Register Map

7	6	5	4	3	2	1	0
RSVD		RFL[5:0]					

RXFLV Bit Descriptions

Bit	Name	Description
7:6	RSVD	**Reserved.** Return 0s.
5:0	RFL[5:0]	**Number of Bytes in RX_FIFO.** These bits specify the number of bytes in the RX_FIFO. **Note:** The contents of TXFLV and RXFLV are not frozen during CPU reads. Therefore, invalid data could be returned if the CPU reads these registers during normal transmitter and receiver operation. To obtain correct data, the software should perform three consecutive reads and then take the data from the second read if the first and second reads yield the same result. It can also be taken from the third read if the first and second reads yield different results.

Downloaded from Arrow.com.

6.12.6 Bank 3 Register Descriptions

The bit formats for the registers in Bank 3 are summarized in Table 6-44. Detailed descriptions of each register follow.

Table 6-44. Bank 3 Bit Map

Register		Bits							
I/O Offset	Name	7	6	5	4	3	2	1	0
00h	MRID	MID[3:0]				RID[3:0]			
01h	SH_LCR	RSVD	SBRK	STKP	EPS	PEN	STB	WLS1	WLS0
02h	SH_FCR	RXFTH[1:0]		TXFTH[1:0]		RSVD	TXSR	RXSR	FIFO_EN
03h	BSR	BKSE	BSR[6:0]						
04h-07h	RSVD	RSVD							

6.12.6.1 Module Identification and Revision ID Register (MRID)

I/O Offset 00h
Type RO
Reset Value 0xh

The MRID register identifies the revision of the module. When read, it returns the module ID and revision level in the format 0xh, where x indicates the revision number.

MRID Register Map

7	6	5	4	3	2	1	0
MID[3:0]				RID[3:0]			

MRID Bit Descriptions

Bit	Name	Description
7:4	MID[3:0]	**Module ID.** Identifies the module type.
3:0	RID[3:0]	**Revision ID.** Identifies the module revision level. For example, 0h = revision 0, 1h = revision 1, etc.

6.12.6.2 Shadow of Link Control Register (SH_LC)

I/O Offset 01h
Type RO
Reset Value 00h

This register returns the value of the LCR register. The LCR register is written into when a byte value, with bit 7 set to 0, is written to the LCR/BSR registers location (at I/O Offset 03h) from any bank.

SH_LC Register Map

7	6	5	4	3	2	1	0
RSVD	SBRK	STKP	EPS	PEN	STB	WLS1	WLS0

Downloaded from Arrow.com.

6.12.6.3 Shadow of FIFO Control Register (SH_FC)

I/O Offset 02h
Type RO
Reset Value 00h

This register returns the contents of the FCR in Bank 0 (I/O Offset 02h.

SH_FC Register Map

7	6	5	4	3	2	1	0
RXFTH[1:0]		TXFTH[1:0]		RSVD	TXSR	RXSR	FIFO_EN

6.12.6.4 Bank Select Register (BSR)

I/O Offset 03h
Type R/W
Reset Value 00h

The BSR register is the same as the BSR register at I/O Offset 03h in Bank 0. See Section 6.12.3.4 "Link Control/Bank Select Registers" on page 420 for bit descriptions.

6.12.7 Bank 4 Register Descriptions

The bit formats for the registers in Bank 4 are summarized in Table 6-45. Detailed descriptions of each register follow.

Table 6-45. Bank 4 Bit Map

Register		Bits							
I/O Offset	Name	7	6	5	4	3	2	1	0
00h-01h	RSVD	RSVD							
02h	IRCR1	RSVD				IR_SL[1:0]		RSVD	
03h	BSR	BKSE	BSR[6:0]						
04h-07h	RSVD	RSVD							

6.12.7.1 IR Control Register 1 (IRCR1)

I/O Offset 02h
Type R/W
Reset Value 00h

The IRCR1 enables the Sharp-IR or SIR IR mode in non-extended mode of operation. Upon reset, all bits are set to 0.

IRCR1 Register Map

7	6	5	4	3	2	1	0
RSVD				IR_SL[1:0]		RSVD	

IRCR1 Bit Descriptions

Bit	Name	Description
7:4	RSVD	**Reserved.** Write as 0.
3:2	IR_SL[1:0]	**Sharp-IR or SIR Mode Select.** These bits enable Sharp-IR and SIR modes in non-extended mode. They allow selection of the appropriate IR interface when extended mode is not selected. These bits are ignored when extended mode is selected. 00: UART. (Default) 01: Reserved. 10: Sharp-IR. 11: SIR.
1:0	RSVD	**Reserved.** Write as 0.

Downloaded from Arrow.com.

6.12.7.2 Bank Select Register (BSR)

I/O Offset 03h
Type R/W
Reset Value 00h

This register is the same as the BSR register at I/O Offset 03h in Bank 0. See Section 6.12.3.4 "Link Control/Bank Select Registers" on page 420 for bit descriptions.

6.12.8 Bank 5 Register Descriptions

The bit formats for the registers in Bank 5 are summarized in Table 6-46. Detailed descriptions of each register follow.

Table 6-46. Bank 5 Bit Map

Register		Bits							
I/O Offset	Name	7	6	5	4	3	2	1	0
00h-02h	RSVD	RSVD							
03h	BSR	BKSE	BSR[6:0]						
04h	IRCR2	RSVD	RSVD	RSVD	AUX_IRRX	RSVD	RSVD	IRMSSL	IR_FDPLX
05h-07h	RSVD	RSVD							

6.12.8.1 Bank Select Register (BSR)

I/O Offset 03h
Type R/W
Reset Value 00h

This register is the same as the BSR register at I/O Offset 03h in Bank 0. See Section 6.12.3.4 "Link Control/Bank Select Registers" on page 420 for bit descriptions.

6.12.8.2 IR Control Register 2 (IRCR2)

I/O Offset 04h
Type R/W
Reset Value 02h

The IRCR2 register controls the basic settings of the IR modes. Upon reset, the content of this register is 02h.

IRCR2 Register Map

7	6	5	4	3	2	1	0
RSVD			AUX_IRRX	RSVD		IRMSSL	IR_FDPLX

IRCR2 Bit Descriptions

Bit	Name	Description
7:5	RSVD	**Reserved.** Write to 0.
4	AUX_IRRX	**Auxiliary IR Input Select.** When set to 1, the IR signal is received from the auxiliary input. See Table 6-54 "IR Receive Input Selection" on page 446.
3:2	RSVD	**Reserved.** Write to 0.
1	IRMSSL	**MSR Register Function Select in IR Mode.** This bit selects the behavior of the MSR (Bank 0 I/O Offset 06h) and Modem Status Interrupt (MS_EV) when an IR mode is selected. When a UART mode is selected, the MSR and the MS_EV function normally and this bit is ignored. 0: The MSR and MS_EV work in the IR modes as in the UART mode. 1: The MSR returns 30h, and MS_EV is disabled. (Default)
0	IR_FDPLX	**Enable IR Full Duplex Mode.** When set to 1, the IR receiver is not masked during transmission.

Downloaded from Arrow.com.

6.12.9 Bank 6 Register Descriptions

The bit formats for the registers in Bank 6 are summarized in Table 6-47. Detailed descriptions of each register follow.

Table 6-47. Bank 6 Bit Map

Register		Bits							
I/O Offset	Name	7	6	5	4	3	2	1	0
00h	IRCR3	SHDM_DS	SHMD_DS	RSVD					
01h	RSVD	RSVD							
02h	SIR_PW	RSVD				SPW3	SPW2	SPW1	SPW0
03h	BSR	BKSE	BSR[6:0]						
04h-07h	RSVD	RSVD							

6.12.9.1 IR Control Register 3 (IRCR3)

I/O Offset 00h
Type R/W
Reset Value 20h

The IRCR3 register is used to select the operating mode of the Sharp-IR interface.

IRCR3 Register Map

7	6	5	4	3	2	1	0
SHDM_DS	SHMD_DS	RSVD					

IRCR3 Bit Descriptions

Bit	Name	Description
7	SHDM_DS	**Sharp-IR Demodulation Disable.** 0: Internal 500 KHz receiver demodulation enabled. (Default) 1: Internal demodulation disabled.
6	SHMD_DS	**Sharp-IR Modulation Disable.** 0: Internal 500 KHz transmitter modulation enabled. (Default) 1: Internal modulation disabled.
5:0	RSVD	**Reserved.** Read as written.

Downloaded from Arrow.com.

6.12.9.2 SIR Pulse Width Register (SIR_PW)

I/O Offset 02h
Type R/W
Reset Value 00h

SIR_PW sets the pulse width for transmitted pulses in SIR operation mode. These settings do not affect the receiver. Upon reset, the content of this register is 00h, which defaults to a pulse width of 3/16 of the baud rate.

SIR_PW Register Map

7	6	5	4	3	2	1	0
RSVD				SPW[3:0]			

SIR_PW Bit Descriptions

Bit	Name	Description
7:4	RSVD	**Reserved.** Write to 0.
3:0	SPW[3:0]	**SIR Pulse Width.** Two codes for setting the pulse width are available. All other values for this field are reserved. 0000: Pulse width = 3/16 of bit period (Default). 1101: Pulse width = 1.6 µs.

6.12.9.3 Bank Select Register (BSR)

I/O Offset 03h
Type R/W
Reset Value 00h

This register is the same as the BSR register at Bank 0 I/O Offset 03h. See Section 6.12.3.4 "Link Control/Bank Select Registers" on page 420 for bit descriptions.

Downloaded from Arrow.com.

6.12.10 Bank 7 Register Descriptions

The bit formats for the registers in Bank 7 are summarized in Table 6-47. Detailed descriptions of each register follow.

Table 6-48. Bank 7 Bit Map

Register		Bits							
I/O Offset	Name	7	6	5	4	3	2	1	0
00h	IRRXDC	DBW[2:0]			DFR[4:0]				
01h	IRTXMC	MCPW[2:0]			MCFR[4:0]				
02h	RCCFG	R_LEN	T_OV	RXHSC	RCDM_DS	RSVD	TXHSC	RC_MMD[1:0]	
03h	BSR	BKSE	BSR[6:0]						
04h	IRCFG1	STRV_MS	RSVD	SET_IRTX	IRRX1_LV	RSVD	IRIC[2:0]		
05h-06h	RSVD	RSVD							
07h	IRCFG4	RSVD		IRSL0_DS	RXINV	IRSL21_DS	RSVD		

The CEIR utilizes two carrier frequency ranges (See Table 6-53 on page 443):

- Low range - spans from 30 KHz to 56 KHz, in 1 KHz increments.
- High range - includes three frequencies: 400 KHz, 450 KHz or 480 KHz.

High and low frequencies are specified independently to allow separate transmission and reception modulation settings. The transmitter uses the carrier frequency settings in Table 6-53 "CEIR Carrier Frequency Encoding" on page 443.

The two registers at I/O Offsets 04h and 07h (IR transceiver configuration registers) are provided to configure the virtual IR dongle interface via IRSL[2:0] bits (to allow legacy software writes on these bits).

6.12.10.1 IR Receiver Demodulator Control Register (IRRXDC)

I/O Offset 00h
Type R/W
Reset Value 29h

IRRXDC controls settings for Sharp-IR and CEIR reception. After reset, the content of this register is 29h. This setting selects a subcarrier frequency in a range between 34.61 KHz and 38.26 KHz for the CEIR mode, and from 480.0 KHz to 533.3 KHz for the Sharp-IR mode. The value of this register is ignored if the receiver demodulation for both modes is disabled (Bank 6 I/O Offset 00h[7] and Bank 7 I/O Offset 02h[4]). The available frequency ranges for CEIR and Sharp-IR modes are given in Tables 6-49 through 6-51.

IRRXDC Register Map

7	6	5	4	3	2	1	0
DBW[2:0]			DFR[4:0]				

IRRXDC Bit Descriptions

Bit	Name	Description
7:5	DBW[2:0]	**Demodulator Bandwidth.** These bits set the demodulator bandwidth for the selected frequency range. The subcarrier signal frequency must fall within the specified frequency range in order to be accepted. Used for both Sharp-IR and CEIR modes. (Default = 001)
4:0	DFR[4:0]	**Demodulator Frequency.** These bits select the subcarrier's center frequency for the CEIR mode. (Default = 01001)

Downloaded from Arrow.com.

Table 6-49. CEIR, Low Speed Demodulator (RXHSC = 0) (Frequency Ranges in KHz)

	DBW[2:0] Bits (Bits [7:5] of IRRXDC)											
	001		010		011		100		101		110	
DFR[4:0]	Min	Max	Min	Max	Min	Max	Min	Max	Min	Max	Min	Max
00011	28.6	31.6	27.3	33.3	26.1	35.3	25.0	37.5	24.0	40.0	23.1	42.9
00100	29.3	32.4	28.0	34.2	26.7	36.2	25.6	38.4	24.6	41.0	23.7	43.9
00101	30.1	33.2	28.7	35.1	27.4	37.1	26.3	39.4	25.2	42.1	24.3	45.1
00110	31.7	35.1	30.3	37.0	29.0	39.2	27.8	41.7	26.7	44.4	25.6	47.6
00111	32.6	36.0	31.1	38.1	29.8	40.3	28.5	42.8	27.4	45.7	26.3	48.9
01000	33.6	37.1	32.0	39.2	30.7	41.5	29.4	44.1	28.2	47.0	27.1	50.4
01001	34.6	38.3	33.0	40.4	31.6	42.8	30.3	45.4	29.1	48.5	28.0	51.9
01011	35.7	39.5	34.1	41.7	32.6	44.1	31.3	46.9	30.0	50.0	28.8	53.6
01100	36.9	40.7	35.2	43.0	33.7	45.5	32.3	48.4	31.0	51.6	29.8	55.3
01101	38.1	42.1	36.4	44.4	34.8	47.1	33.3	50.0	32.0	53.3	30.8	57.1
01111	39.4	43.6	37.6	45.9	36.0	48.6	34.5	51.7	33.1	55.1	31.8	59.1
10000	40.8	45.1	39.0	47.6	37.3	50.4	35.7	53.6	34.3	57.1	33.0	61.2
10010	42.3	46.8	40.4	49.4	38.6	52.3	37.0	55.6	35.6	59.3	34.2	63.5
10011	44.0	48.6	42.0	51.3	40.1	54.3	38.5	57.7	36.9	61.5	35.5	65.9
10101	45.7	50.5	43.6	53.3	41.7	56.5	40.0	60.0	38.4	64.0	36.9	68.6
10111	47.6	52.6	45.5	55.6	43.5	58.8	41.7	62.5	40.0	66.7	38.5	71.4
11010	49.7	54.9	47.4	57.9	45.3	61.4	43.5	65.2	41.7	69.5	40.1	74.5
11011	51.9	57.4	49.5	60.6	47.4	64.1	45.4	68.1	43.6	72.7	41.9	77.9
11101	54.4	60.1	51.9	63.4	49.7	67.2	47.6	71.4	45.7	76.1	43.9	81.6

Table 6-50. Consumer IR High Speed Demodulator (RXHSC = 1) (Frequency Ranges in KHz)

	DBW[2:0] Bits (Bits [7:5] of IRRXDC)											
	001		010		011		100		101		110	
DFR[4:0]	Min	Max	Min	Max	Min	Max	Min	Max	Min	Max	Min	Max
00011	381.0	421.1	363.6	444.4	347.8	470.6	333.3	500.0	320.0	533.3	307.7	571.4
01000	436.4	480.0	417.4	505.3	400.0	533.3	384.0	564.7	369.2	600.0	355.6	640.0
01011	457.7	505.3	436.4	533.3	417.4	564.7	400.0	600.0	384.0	640.0	369.9	685.6

Table 6-51. Sharp-IR Demodulator (Frequency Ranges in KHz)

	DBW[2:0] Bits (Bits [7:5] of IRRXDC)											
	001		010		011		100		101		110	
DFR[4:0]	Min	Max	Min	Max	Min	Max	Min	Max	Min	Max	Min	Max
xxxxx	480.0	533.3	457.1	564.7	436.4	600.0	417.4	640.0	400.0	685.6	384.0	738.5

Downloaded from Arrow.com.

6.12.10.2 IR Transmitter Modulator Control Register (IRTXMC)

I/O Offset 01h
Type R/W
Reset Value 69h

IRTXMC selects the modulation subcarrier parameters for CEIR and Sharp-IR mode transmission. For Sharp-IR, only the subcarrier pulse width is controlled by this register; the subcarrier frequency is fixed at 500 KHz.

After reset, the value of this register is 69h, selecting a carrier frequency of 36 KHz and an IR pulse width of 7 µs for CEIR, or a pulse width of 0.8 µs for Sharp-IR.

IRTXMC Bit Map

7	6	5	4	3	2	1	0
MCPW[2:0]			MCFR[4:0]				

IRTXMC Bit Descriptions

Bit	Name	Description
7:5	MCPW[2:0]	**Modulation Subcarrier Pulse Width.** Specifies the pulse width of the subcarrier clock, as shown in Table 6-52. (Default = 011)
4:0	MCFR[4:0]	**Modulation Subcarrier Frequency.** These bits set the frequency for the CEIR modulation subcarrier. The encoding is defined in Table 6-53. (Default = 01001)

Table 6-52. Modulation Carrier Pulse Width

MCPW[2:0]	Low Frequency (TXHSC = 0) (CEIR only)	High Frequency (TXHSC = 1) (CEIR or Sharp-IR)
0 0 0	Reserved	Reserved
0 0 1	Reserved	Reserved
0 1 0	6.0 µs	0.7 µs
0 1 1	7.0 µs	0.8 µs
1 0 0	9.0 µs	0.9 µs
1 0 1	10.6 µs	Reserved
1 1 0	Reserved	Reserved
1 1 1	Reserved	Reserved

Downloaded from Arrow.com.

Table 6-53. CEIR Carrier Frequency Encoding

MCFR[4:0]	Low Frequency (TXHSC = 0)	High Frequency (TXHSC = 1)
00000	Reserved	Reserved
00001	Reserved	Reserved
00010	Reserved	Reserved
00011	30 KHz	400 KHz
00100	31 KHz	Reserved
00101	32 KHz	Reserved
00110	33 KHz	Reserved
00111	34 KHz	Reserved
01000	35 KHz	450 KHz
01001	36 KHz	Reserved
01010	37 KHz	Reserved
01011	38 KHz	480 KHz
01100	39 KHz	Reserved
01101	40 KHz	Reserved
01110	41 KHz	Reserved
01111	42 KHz	Reserved
10000	43 KHz	Reserved
10001	44 KHz	Reserved
10010	45 KHz	Reserved
10011	46 KHz	Reserved
10100	47 KHz	Reserved
10101	48 KHz	Reserved
10110	49 KHz	Reserved
10111	50 KHz	Reserved
11000	51 KHz	Reserved
11001	52 KHz	Reserved
11010	53 KHz	Reserved
11011	54 KHz	Reserved
11100	55 KHz	Reserved
11101	56 KHz	Reserved
11110	56.9 KHz	Reserved
11111	Reserved	Reserved

Downloaded from Arrow.com.

6.12.10.3 CEIR Configuration Register (RCCFG)

I/O Offset 02h
Type R/W
Reset Value 00h

This register controls the basic operation of the CEIR mode.

RCCFG Register Map

7	6	5	4	3	2	1	0
R_LEN	T_OV	RXHSC	RCDM_DS	RSVD	TXHSC	RC_MMD[1:0]	

RCCFG Bit Descriptions

Bit	Name	Description
7	R_LEN	**Run Length Control.** When set to 1, this bit enables run length encoding/decoding. The format of a run length code is: Yxxxxxxx, where Y is the bit value and xxxxxxx is the number of bits minus 1 (selects from 1 to 128 bits).
6	T_OV	**Receiver Sampling Mode.** 0: Programmed T period sampling. 1: Oversampling mode.
5	RXHSC	**Receiver Carrier Frequency Select.** This bit selects the receiver demodulator frequency range. 0: Low frequency: 30.0-56.9 KHz. 1: High frequency: 400-480 KHz.
4	RCDM_DS	**Receiver Demodulation Disable.** When this bit is 1, the internal demodulator is disabled. The internal demodulator, when enabled, performs carrier frequency checking and envelope generation. This bit must be set to 1 (disabled) when the demodulation is performed externally, or when oversampling mode is selected to determine the carrier frequency.
3	RSVD	**Reserved.** Write as 0.
2	TXHSC	**Transmitter Subcarrier Frequency Select.** This bit selects the modulation carrier frequency range. 0: Low frequency: 30.0-56.9 KHz. 1: High frequency: 400-480 KHz.
1:0	RC_MMD[1:0]	**Transmitter Modulator Mode.** Determines how IR pulses are generated from the transmitted bit string. 00: C_PLS modulation mode. Pulses are generated continuously for the entire logic 0 bit time. 01: 8_PLS modulation mode. 8 pulses are generated each time one or more logic 0 bits are transmitted following a logic 1 bit. 10: 6_PLS Modulation Mode. 6 pulses are generated each time one or more logic 0 bits are transmitted following a logic 1 bit. 11: Reserved. Result is indeterminate.

Downloaded from Arrow.com.

6.12.10.4 Bank Select Register (BSR REGISTER)

I/O Offset 03h
Type R/W
Reset Value 00h

This register is the same as the BSR register at I/O Offset 03h in Bank 0. See Section 6.12.3.4 "Link Control/Bank Select Registers" on page 420 for bit descriptions.

6.12.10.5 IR Interface Configuration Register 1 (IRCFG1)

I/O Offset 04h
Type R/W
Reset Value xxh

IRCFG1 holds the transceiver configuration data for Sharp-IR and SIR modes. It is also used to directly control the transceiver operation mode when automatic configuration is not enabled. The two next-to-least significant bits are used to read the identification data of a plug-and-play IR interface adapter.

IRCFG1 Register Map

7	6	5	4	3	2	1	0
STRV_MS	RSVD	SET_RTX	IRRX1_LV	RSVD	IRIC[2:0]		

IRCFG1 Bit Descriptions

Bit	Name	Description
7	STRV_MS	**Special Transceiver Mode Selection.** When this bit is set to 1, the UART[x]_IR_TX output signal is forced to active high and a timer is started. The timer times out after 64 micro-seconds, at which time the bit is reset and the UART[x]_IR_TX output signal becomes low again. The timer is restarted every time a 1 is written to this bit. Although it is possible to extend the period during which UART[x]_IR_TX remains high beyond 64 micro-seconds, this should be avoided to prevent damage to the transmitter LED. Writing 0 to this bit has no effect.
6	RSVD	**Reserved.** Write as 0.
5	SET_IRTX	**Set IRTX.** When this bit is set to 1, it forces the UART[x]_IR_TX signal high. **Caution:** Indefinite HIGH output should be avoided as this condition can damage the transmitter LED.
4	IRRX1_LV	**IRRX1 Level (Read Only).** This bit reflects the value of the UART[x]_IR_RX input signal.
3	RSVD	**Reserved.** Write as 0.
2:0	IRIC[2:0]	**Transceiver Identification and Control Bits 2 through 0.** The function of IRIC0 depends on whether the MSR 51400039h/5140003Dh[4:2] signal is programmed as an input or an output. If programmed as an input (IRSL0_DS = 0, I/O Offset 07h[5]) then upon a read, this bit returns the logic level of the signal. Data written to this bit position is ignored. The other two signals (IRSL1, IRSL2) must be programmed as outputs only (IRSL21_DS = 1, I/O Offset 07h[3]). If the UART[x]_IRSL0/IRRX2 signal is programmed as an output, IRIC[2:0] drives the IRSL[2:0] signals to select the operation mode of an infrared dongle. (These bits are reflected in bits [4:2] of MSR_UART[x]_DONG). When read, these bits return the values previously written. Below is the operation mode encoding for non-serial transceivers. 00x: IrDA-data modes. 010: Reserved. 011: 36 KHz consumer IR. 100: 40 KHz consumer IR. 101: 38 KHz consumer IR 110: Reserved. 111: 56.9 KHz consumer IR.

Downloaded from Arrow.com.

6.12.10.6 IR Interface Configuration 4 Register (IRCFG4)

I/O Offset 07h
Type R/W
Reset Value 00h

IRCFG4 configures the receiver data path.

IRCFG4 Register Map

7	6	5	4	3	2	1	0
RSVD		IRSL0_DS	RXINV	IRSL21_DS	RSVD		

IRCFG4 Bit Descriptions

Bit	Name	Description
7:6	RSVD	**Reserved.** Must be written 0.
5	IRSL0_DS	**IRSL0/IRRX2 Pin Direction Select.** This bit determines the direction of the UART[x]_IRSL0/IRRX2 pin. See Table 6-54. 0: Pin direction is input (UART[x]_IRRX2). 1: Pin direction is output (UART[x]_IRSL0).
4	RXINV	**IRRX Signal Invert.** This bit supports optical transceivers with receive signals of opposite polarity (active high instead of active low). When set to 1, an inverter is placed in the receiver input signal path.
3	IRSL21_DS	**Reserved.** Must be written 1.
2:0	RSVD	**Reserved.** Must be written 0.

Table 6-54. IR Receive Input Selection

IRSL0_DS (IRCFG4, bit 5)	AUX_IRRX (IRCR2, bit 4)	Selected IRRX
0	0	IRRX1
0	1	IRRX2
1	0	IRRX1
1	1	None Selected

Downloaded from Arrow.com.

6.13 Direct Memory Access Register Descriptions

The registers for the Direct Memory Access (DMA) are divided into three sets:

- Standard GeodeLink™ Device MSRs (Shared with DIVIL, see Section 6.6.1 on page 348.)
- DMA Specific MSRs
- DMA Native Registers

The MSRs are accessed via the RDMSR and WRMSR processor instructions. The MSR address is derived from the perspective of the CPU Core. See Section 4.2 "MSR Addressing" on page 60 for more details on MSR addressing.

All MSRs are 64 bits, however, the DMA Specific MSRs (summarized in Table 6-55) are called out as 16 bits. The DMA module treats writes to the upper 48 bits (i.e., bits [63:16]) of the 64-bit MSRs as don't cares and always returns 0 on these bits.

The Native registers associated with the DMA module are summarized in Table 6-56 and accessed as I/O Addresses.

Table 6-55. DMA Specific MSRs Summary

MSR Address	Type	Register Name	Reset Value	Reference
51400040h	R/W	DMA Mapper (DMA_MAP)	0000h	Page 450
51400041h	RO	DMA Shadow Channel 0 Mode (DMA_SHDW_CH0)	00xxh	Page 451
51400042	RO	DMA Shadow Channel 1 Mode (DMA_SHDW_CH1)	00xxh	Page 451
51400043	RO	DMA Shadow Channel 2 Mode (DMA_SHDW_CH2)	00xxh	Page 451
51400044	RO	DMA Shadow Channel 3 Mode (DMA_SHDW_CH3)	00xxh	Page 451
51400045h	RO	DMA Shadow Channel 4 Mode (DMA_SHDW_CH4]	00xxh	Page 451
51400046h	RO	DMA Shadow Channel 5 Mode (DMA_SHDW_CH5)	00xxh	Page 451
51400047h	RO	DMA Shadow Channel 6 Mode (DMA_SHDW_CH6)	00xxh	Page 451
51400048h	RO	DMA Shadow Channel 7 Mode (DMA_SHDW_CH7)	00xxh	Page 451
51400049h	RO	DMA Shadow Mask (DMA_MSK_SHDW)	00FFh	Page 452

Table 6-56. DMA Native Registers Summary

I/O Address	Type	Width (Bits)	Register Name	Reset Value	Reference
000h	R/W	8	Slave DMA Channel 0 Memory Address (DMA_CH0_ADDR_BYTE)	xxh	Page 453
001h	R/W	8	Slave DMA Channel 0 Transfer Count (DMA_CH0_CNT_BYTE)	xxh	Page 453
002h	R/W	8	Slave DMA Channel 1 Memory Address (DMA_CH1_ADDR_BYTE)	xxh	Page 453
003h	R/W	8	Slave DMA Channel 1 Transfer Count (DMA_CH1_CNT_BYTE)	xxh	Page 453
004h	R/W	8	Slave DMA Channel 2 Memory Address (DMA_CH2_ADDR_BYTE)	xxh	Page 453

Downloaded from Arrow.com.

Table 6-56. DMA Native Registers Summary (Continued)

I/O Address	Type	Width (Bits)	Register Name	Reset Value	Reference
005h	R/W	8	Slave DMA Channel 2 Transfer Count (DMA_CH2_CNT_BYTE)	xxh	Page 453
006h	R/W	8	Slave DMA Channel 3 Memory Address (DMA_CH3_ADDR_BYTE)	xxh	Page 453
007h	R/W	8	Slave DMA Channel 3 Transfer Count (DMA_CH3_CNT_BYTE)	xxh	Page 453
008h	R	8	Slave DMA Channel [3:0] Status (DMA_CH3:0_STS)	00h	Page 454
	W	8	Slave DMA Channel [3:0] Command (DMA_CH3:0_CMD)	xxh	Page 454
009h	WO	8	Slave DMA Channel [3:0] Software Request (DMA_CH3:0_SFT_REQ)	xxh	Page 455
00Ah	WO	8	Slave DMA Channel [3:0] Channel Mask (DMA_CH3:0_CHMSK)	xxh	Page 455
00Bh	WO	8	Slave DMA Channel [3:0] Mode (DMA_CH3:0_MODE)	xxh	Page 455
00Ch	WO	8	Slave DMA Channel [3:0] Clear Byte Pointer (DMA_CH3:0_CLR_PNTR)	xxh	Page 456
00Dh	WO	8	Slave DMA Channel [3:0] Master Clear (DMA_CH3:0_MSTR_CLR)	xxh	Page 456
00Eh	WO	8	Slave DMA Channel [3:0] Clear Mask Register (DMA_CH3:0_CLR_MSK)	xxh	Page 457
00Fh	WO	8	Slave DMA Channel [3:0] Write Mask Register (DMA_CH3:0_WR_MSK)	0Fh	Page 457
0C0h	R/W	8	Master DMA Channel 4 Memory Address (DMA_CH4_ADDR_BYTE)	xxh	Page 458
0C2h	R/W	8	Master DMA Channel 4 Transfer Count (DMA_CH4_CNT_BYTE)	xxh	Page 458
0C4h	R/W	8	Master DMA Channel 5 Memory Address (DMA_CH5_ADDR_BYTE)	xxh	Page 458
0C6h	R/W	8	Master DMA Channel 5 Transfer Count (DMA_CH5_CNT_BYTE)	xxh	Page 458
0C8h	R/W	8	Master DMA Channel 6 Memory Address (DMA_CH6_ADDR_BYTE)	xxh	Page 458
0CAh	R/W	8	Master DMA Channel 6 Transfer Count (DMA_CH6_CNT_BYTE)	xxh	Page 458
0CCh	R/W	8	Master DMA Channel 7 Memory Address (DMA_CH7_ADDR_BYTE)	xxh	Page 458
0CEh	R/W	8	Master DMA Channel 7 Transfer Count (DMA_CH7_CNT_BYTE)	xxh	Page 458
0D0h	R	8	Master DMA Channel [7:4] Status (DMA_CH7:4_STS)	00h	Page 459
	W	8	Master DMA Channel [7:4] Command (DMA_CH7:4_CMD)	xxh	Page 459
0D2h	WO	8	Master DMA Channel [7:4] Software Request (DMA_CH7:4_SFT_REQ)	xxh	Page 460

Downloaded from Arrow.com.

Table 6-56. DMA Native Registers Summary (Continued)

I/O Address	Type	Width (Bits)	Register Name	Reset Value	Reference
0D4h	WO	8	Master DMA Channel [7:4] Channel Mask (DMA_CH7:4_CHMSK)	xxh	Page 460
0D6h	WO	8	Master DMA Channel [7:4] Mode (DMA_CH7:4_MODE)	xxh	Page 460
0D8h	WO	8	Master DMA Channel [7:4] Clear Byte Pointer (DMA_CH7:4_CLR_PNTR)	xxh	Page 461
0DAh	WO	8	Master DMA Channel [7:4] Master Clear (DMA_CH7:4_MSTR_CLR)	xxh	Page 461
0DCh	WO	8	Master DMA Channel [7:4] Clear Mask (DMA_CH7:4_CLR_MSK)	xxh	Page 462
0DEh	WO	8	Master DMA Channel [7:4] Write Mask (DMA_CH7:4_WR_MSK)	0Fh	Page 462
080h	R/W	8	Post Code Display Register (POST_DISPLAY)	00h	Page 463
081h	R/W	8	DMA Channel 2 Low Page (DMA_CH2_LO_PAGE)	00h	Page 463
082h	R/W	8	DMA Channel 3 Low Page (DMA_CH3_LO_PAGE)	00h	Page 463
083h	R/W	8	DMA Channel 1 Low Page (DMA_CH1_LO_PAGE)	00h	Page 463
087h	R/W	8	DMA Channel 0 Low Page (DMA_CH0_LO_PAGE)	00h	Page 463
089h	R/W	8	DMA Channel 6 Low Page (DMA_CH6_LO_PAGE)	00h	Page 464
08Ah	R/W	8	DMA Channel 7 Low Page (DMA_CH7_LO_PAGE)	00h	Page 464
08Bh	R/W	8	DMA Channel 5 Low Page (DMA_CH5_LO_PAGE)	00h	Page 464
08Fh	R/W	8	DMA Channel 4 Low Page (DMA_CH4_LO_PAGE)	00h	Page 464
481h	R/W	8	DMA Channel 2 High Page (DMA_CH2_HI_PAGE)	00h	Page 465
482h	R/W	8	DMA Channel 3 High Page (DMA_CH3_HI_PAGE)	00h	Page 465
483h	R/W	8	DMA Channel 1 High Page (DMA_CH1_HI_PAGE)	00h	Page 465
487h	R/W	8	DMA Channel 0 High Page (DMA_CH0_HI_PAGE)	00h	Page 465
489h	R/W	8	DMA Channel 6 High Page (DMA_CH6_HI_PAGE)	00h	Page 465
48Ah	R/W	8	DMA Channel 7 High Page (DMA_CH7_HI_PAGE)	00h	Page 465
48Bh	R/W	8	DMA Channel 5 High Page (DMA_CH5_HI_PAGE)	00h	Page 465
48Fh	R/W	8	DMA Channel 4 High Page (DMA_CH4_HI_PAGE)	00h	Page 465

Downloaded from Arrow.com.

6.13.1 DMA Specific MSRs

6.13.1.1 DMA Mapper (DMA_MAP)

MSR Address 51400040h
Type R/W
Reset Value 0000h

DMA_MAP Register Map

15	14	13	12	11	10	9	8	7	6	5	4	3	2	1	0
RSVD	DMA_CH3_MAP			RSVD	DMA_CH2_MAP			RSVD	DMA_CH1_MAP			RSVD	DMA_CH0_MAP		

DMA_MAP Bit Descriptions

Bit	Name	Description
15	RSVD	**Reserved.** No effect on DMA Mapper functionality; reads return value written.
14:12	DMA_CH3_MAP	**DMA Channel 3 Source Select.** 000: DMA Channel 3 off. 001: UART1 transmit. 010: UART1 receive. 011: UART2 transmit. 100: UART2 receive. 101: Reserved; not active. 110: Reserved; not active. 111: LPC DMA Channel 3.
11	RSVD	**Reserved.** No effect on DMA Mapper functionality; reads return value written.
10:8	DMA_CH2_MAP	**DMA Channel 2 Source Select.** 000: DMA Channel 2 off. 001: UART1 transmit. 010: UART1 receive. 011: UART2 transmit. 100: UART2 receive. 101: Reserved; not active. 110: Reserved; not active. 111: LPC DMA Channel 2.
7	RSVD	**Reserved.** No effect on DMA Mapper functionality; reads return value written.
6:4	DMA_CH1_MAP	**DMA Channel 1 Source Select.** 000: DMA Channel 1 off. 001: UART1 transmit. 010: UART1 receive. 011: UART2 transmit. 100: UART2 receive. 101: Reserved; not active. 110: Reserved; not active. 111: LPC DMA Channel 1.
3	RSVD	**Reserved.** No effect on DMA Mapper functionality; reads return value written.
2:0	DMA_CH0_MAP	**DMA Channel 0 Source Select.** 000: DMA Channel 0 off. 001: UART1 transmit. 010: UART1 receive. 011: UART2 transmit. 100: UART2 receive. 101: Reserved; not active. 110: Reserved; not active. 111: LPC DMA Channel 0.

Downloaded from Arrow.com.

6.13.1.2 DMA Shadow Channel [7:0] Mode (DMA_SHDW_CH[x])

DMA Shadow Channel 0 Mode (DMA_SHDW_CH0)
MSR Address 51400041h
Type RO
Reset Value 00xxh

DMA Shadow Channel 1 Mode (DMA_SHDW_CH1)
MSR Address 51400042
Type RO
Reset Value 00xxh

DMA Shadow Channel 2 Mode (DMA_SHDW_CH2)
MSR Address 51400043
Type RO
Reset Value 00xxh

DMA Shadow Channel 3 Mode (DMA_SHDW_CH3)
MSR Address 51400044
Type RO
Reset Value 00xxh

DMA Shadow Channel 4 Mode (DMA_SHDW_CH4]
MSR Address 51400045h
Type RO
Reset Value 00xxh

DMA Shadow Channel 5 Mode (DMA_SHDW_CH5)
MSR Address 51400046h
Type RO
Reset Value 00xxh

DMA Shadow Channel 6 Mode (DMA_SHDW_CH6)
MSR Address 51400047h
Type RO
Reset Value 00xxh

DMA Shadow Channel 7 Mode (DMA_SHDW_CH7)
MSR Address 51400048h
Type RO
Reset Value 00xxh

DMA_SHDW_CH[x] Register Map

15	14	13	12	11	10	9	8	7	6	5	4	3	2	1	0
RSVD								TRANS_MODE		ADDR_DIR	AUTO_INIT	TRANS_TYPE		CH_NUM	

DMA_SHDW_CH[x] Bit Descriptions

Bit	Name	Description
15:8	RSVD	**Reserved.** Reads as 00h.
7:6	TRANS_MODE	**Data Transfer Mode.** 00: Demand. 10: Block. 01: Single. 11: Cascade
5	ADDR_DIR	**Address Direction.** 0: Increment; 1: Decrement.
4	AUTO_INIT	**Auto-Initialization Enable.** 0: Disabled; 1: Enabled.
3:2	TRANS_TYPE	**Transfer Type.** 00: Verify. 10: Memory read. 01: Memory write. 11: Reserved.
1:0	CH_NUM	**Channel Number [3:0].** 00: Channel 0. 10: Channel 2. 01: Channel 1. 11: Channel 3.
		Channel Number [7:4]. 00: Channel 4. 10: Channel 6. 01: Channel 5. 11: Channel 7.

Downloaded from Arrow.com.

6.13.1.3 DMA Shadow Mask (DMA_MSK_SHDW)

MSR Address 51400049h
Type RO
Reset Value 00FFh

DMA__MSK_SHDW Register Map

15	14	13	12	11	10	9	8	7	6	5	4	3	2	1	0
RSVD								CH7MASK	CH6MASK	CH5MASK	CH4MASK	CH3MASK	CH2MASK	CH1MASK	CH0MASK

DMA__MSK_SHDW Bit Descriptions

Bit	Name	Description
15:8	Reserved	**Reserved.** Reads as 00h.
7	CH7MASK	**Channel 7 Mask** Reflects value of Channel 7 Mask bit. 0: Not masked; 1: Masked.
6	CH6MASK	**Channel 6 Mask.** Reflects value of Channel 6 Mask bit. 0: Not masked; 1: Masked.
5	CH5MASK	**Channel 5 Mask.** Reflects value of Channel 5 Mask bit. 0: Not masked; 1: Masked.
4	CH4MASK	**Channel 4 Mask.** Reflects value of Channel 4 Mask bit. 0: Not masked; 1: Masked.
3	CH3MASK	**Channel 3 Mask.** Reflects value of Channel 3 Mask bit. 0: Not masked; 1: Masked.
2	CH2MASK	**Channel 2 Mask.** Reflects value of Channel 2 Mask bit. 0: Not masked; 1: Masked.
1	CH1MASK	**Channel 1 Mask.** Reflects value of Channel 1 Mask bit. 0: Not masked; 1: Masked.
0	CH0MASK	**Channel 0 Mask.** Reflects value of Channel 0 Mask bit. 0: Not masked; 1: Masked.

Downloaded from Arrow.com.

6.13.2 DMA Native Registers

These registers reside in the I/O address space.

6.13.2.1 Slave DMA Channel [3:0] Memory Address (DMA_CH[x]_ADDR_BYTE)

Slave DMA Channel 0 Memory Address (DMA_CH0_ADDR_BYTE)
I/O Address 000h
Type R/W
Reset Value xxh

Slave DMA Channel 1 Memory Address (DMA_CH1_ADDR_BYTE)
I/O Address 002h
Type R/W
Reset Value xxh

Slave DMA Channel 2 Memory Address (DMA_CH2_ADDR_BYTE)
I/O Address 004h
Type R/W
Reset Value xxh

Slave DMA Channel 3 Memory Address (DMA_CH3_ADDR_BYTE)
I/O Address 006h
Type R/W
Reset Value xxh

DMA_CH[x]_ADDR_BYTE Register Map

7	6	5	4	3	2	1	0
DMA_CH_ADDR_BYTE							

DMA_CH[x]_ADDR_BYTE Bit Descriptions

Bit	Name	Description
7:0	DMA_CH_ADDR_BYTE	**DMA Channel Address.** Read/write in two successive bus cycles, low byte first.

6.13.2.2 Slave DMA Channel [3:0] Transfer Count (DMA_CH[x]_CNT_BYTE)

Slave DMA Channel 0 Transfer Count (DMA_CH0_CNT_BYTE)
I/O Address 001h
Type R/W
Reset Value xxh

Slave DMA Channel 1 Transfer Count (DMA_CH1_CNT_BYTE)
I/O Address 003h
Type R/W
Reset Value xxh

Slave DMA Channel 2 Transfer Count (DMA_CH2_CNT_BYTE)
I/O Address 005h
Type R/W
Reset Value xxh

Slave DMA Channel 3 Transfer Count (DMA_CH3_CNT_BYTE)
I/O Address 007h
Type R/W
Reset Value xxh

DMA_CH[x]_CNT_BYTE Register Map

7	6	5	4	3	2	1	0
DMA_CH_CNT_BYTE							

DMA_CH[x]_CNT_BYTE Bit Descriptions

Bit	Name	Description
7:0	DMA_CH_CNT_BYTE	**DMA Channel Transfer Count.** Read/write in two successive bus cycles, low byte first.

Downloaded from Arrow.com.

6.13.2.3 DMA Channel [3:0] Status / Command

Slave DMA Channel [3:0] Status (DMA_CH3:0_STS)

I/O Address 008h
Type R
Reset Value 00h

DMA_CH3:0_STS Register Map

7	6	5	4	3	2	1	0
DMA_CH3_RQ	DMA_CH2_RQ	DMA_CH1_RQ	DMA_CH0_RQ	DMA_CH3_TC	DMA_CH2_TC	DMA_CH1_TC	DMA_CH0_TC

DMA_CH3:0_STATUS Bit Descriptions

Bit	Name	Description
7	DMA_CH3_RQ	**Channel 3 DMA Request.** 0: Not pending; 1: Pending.
6	DMA_CH2_RQ	**Channel 2 DMA Request.** 0: Not pending; 1: Pending.
5	DMA_CH1_RQ	**Channel 1 DMA Request.** 0: Not pending; 1: Pending.
4	DMA_CH0_RQ	**Channel 0 DMA Request.** 0: Not pending; 1: Pending.
3	DMA_CH3_TC	**Channel 3 Terminal Count.** 0: Count not reached; 1: Count reached.
2	DMA_CH2_TC	**Channel 2 Terminal Count.** 0: Count not reached; 1: Count reached.
1	DMA_CH1_TC	**Channel 1 Terminal Count.** 0: Count not reached; 1: Count reached.
0	DMA_CH0_TC	**Channel 0 Terminal Count.** 0: Count not reached; 1: Count reached.

Slave DMA Channel [3:0] Command (DMA_CH3:0_CMD)

I/O Address 008h
Type W
Reset Value xxh

DMA_CH3:0_CMD Register Map

7	6	5	4	3	2	1	0
DACK_SENSE	DREQ_SENSE	WR_TIMING	PR_MODE	TM_MODE	DMA_DIS	RSVD	

DMA_CH3:0_CMD Bit Descriptions

Bit	Name	Description
7	DACK_SENSE	**DACK Sense.** 0: Active low; 1: Active high.
6	DREQ_SENSE	**DREQ Sense.** 0: Active high; 1: Active low.
5	WR_TIMING	**Write Timing.** 0: Late write; 1: Extended write.
4	PR_MODE	**Priority Mode.** 0: Fixed priority; 1: Rotating priority.
3	TM_MODE	**Timing Mode.** 0: Normal timing; 1: Compressed timing.
2	DMA_DIS	**DMA Disable.** 0: DMA enable for Channels [3:0]; 1: DMA disable for Channels [3:0].
1:0	RSVD	**Reserved.** Bit 0 must be written with value 0; bit 1 value is don't care.

Downloaded from Arrow.com.

6.13.2.4 Slave DMA Channel [3:0] Software Request (DMA_CH3:0_SFT_REQ)

I/O Address 009h
Type WO
Reset Value xxh

DMA_CH3:0_SFT_REQ Register Map

7	6	5	4	3	2	1	0
RSVD					DMA_RQ	DMA_CH_SEL	

DMA_CH3:0_SFT_REQ Bit Descriptions

Bit	Name	Description
7:3	RSVD	**Reserved.** Write value is don't care.
2	DMA_RQ	**DMA Request.** Set to 1 to enable DMA request.
1:0	DMA_CH_SEL	**DMA Channel Select.** 00: Channel 0. 10: Channel 2. 01: Channel 1. 11: Channel 3.

6.13.2.5 Slave DMA Channel [3:0] Channel Mask (DMA_CH3:0_CHMSK)

I/O Address 00Ah
Type WO
Reset Value xxh

DMA_CH3:0_CHMSK Register Map

7	6	5	4	3	2	1	0
RSVD					CH_MASK	DMA_CH_SEL	

DMA_CH3:0_CHMSK Bit Descriptions

Bit	Name	Description
7:3	RSVD	**Reserved.** Write value is don't care.
2	CH_MASK	**Channel Mask.** Set to 1 to mask out DMA for selected channel.
1:0	DMA_CH_SEL	**DMA Channel Select.** 00: Channel 0. 10: Channel 2. 01: Channel 1. 11: Channel 3.

6.13.2.6 Slave DMA Channel [3:0] Mode (DMA_CH3:0_MODE)

I/O Address 00Bh
Type WO
Reset Value xxh

DMA_CH3:0_MODE Register Map

7	6	5	4	3	2	1	0
TRANS_MODE		ADDR_DIR	AUTO_INIT	TRANS_TYPE		DMA_CH_SEL	

Downloaded from Arrow.com.

DMA_CH3:0_MODE Bit Descriptions

Bit	Name	Description
7:6	TRANS_MODE	**Data Transfer Mode.** 00: Demand. 10: Block. 01: Single. 11: Cascade.
5	ADDR_DIR	**Address Direction.** 0: Increment; 1: Decrement.
4	AUTO_INIT	**Auto-Initialization Enable.** 0: Disabled; 1: Enabled.
3:2	TRANS_TYPE	**Transfer Type.** 00: Verify. 10: Memory read. 01: Memory write. 11: Reserved
1:0	DMA_CH_SEL	**DMA Channel Select.** 00: Channel 0. 10: Channel 2. 01: Channel 1. 11: Channel 3.

6.13.2.7 Slave DMA Channel [3:0] Clear Byte Pointer (DMA_CH3:0_CLR_PNTR)

I/O Address Offset 00Ch
Type WO
Reset Value xxh

DMA_CH3:0_CLR_PNTR Register Map

7	6	5	4	3	2	1	0
CLR_PNTR (DUMMY_VAL)							

DMA_CH3:0_CLR_PNTR Bit Descriptions

Bit	Name	Description
7:0	CLR_PNTR	**Clear Pointer.** A write with any data (dummy value) resets high/low byte pointer for Channels 3:0 memory address and terminal count registers.

6.13.2.8 Slave DMA Channel [3:0] Master Clear (DMA_CH3:0_MSTR_CLR)

I/O Address 00Dh
Type WO
Reset Value xxh

DMA_CH3:0_MSTR_CLR Register Map

7	6	5	4	3	2	1	0
MSTR_CLR (DUMMY_VAL)							

DMA_CH3:0_MSTR_CLR Bit Descriptions

Bit	Name	Description
7:0	MSTR_CLR	**Master Clear.** A write with any data (dummy value) resets the 8237 DMA controller for Channels [3:0].

Downloaded from Arrow.com.

6.13.2.9 Slave DMA Channel [3:0] Clear Mask Register (DMA_CH3:0_CLR_MSK)

I/O Address 00Eh
Type WO
Reset Value xxh

DMA_CH3:0_CLR_MSK Register Map

7	6	5	4	3	2	1	0
CLR_MSK (DUMMY_VAL)							

DMA_CH3:0_CLR_MSK Bit Descriptions

Bit	Name	Description
7:0	CLR_MSK	**Clear Mask.** A write with any data (dummy value) clears the mask bits for Channels [3:0].

6.13.2.10 Slave DMA Channel [3:0] Write Mask Register (DMA_CH3:0_WR_MSK)

I/O Address 00Fh
Type WO
Reset Value 0Fh

DMA_CH3:0_WR_MSK Register Map

7	6	5	4	3	2	1	0
RSVD				CH3_MASK	CH2_MASK	CH1_MASK	CH0_MASK

DMA_CH3:0_WR_MSK Bit Descriptions

Bit	Name	Description
7:4	Reserved	**Reserved.** Write value is don't care.
3	CH3_MASK	**Channel 3 Mask Value.** 0: Not masked; 1: Masked.
2	CH2_MASK	**Channel 2 Mask Value.** 0: Not masked; 1: Masked.
1	CH1_MASK	**Channel 1 Mask Value.** 0: Not masked; 1: Masked.
0	CH0_MASK	**Channel 0 Mask Value.** 0: Not masked; 1: Masked.

Downloaded from Arrow.com.

6.13.2.11 Master DMA Channel [7:4] Memory Address (DMA_CH[x]_ADDR_BYTE)

Master DMA Channel 4 Memory Address (DMA_CH4_ADDR_BYTE)
I/O Address 0C0h
Type R/W
Reset Value xxh

Master DMA Channel 5 Memory Address (DMA_CH5_ADDR_BYTE)
I/O Address 0C4h
Type R/W
Reset Value xxh

Master DMA Channel 6 Memory Address (DMA_CH6_ADDR_BYTE)
I/O Address 0C8h
Type R/W
Reset Value xxh

Master DMA Channel 7 Memory Address (DMA_CH7_ADDR_BYTE)
I/O Address 0CCh
Type R/W
Reset Value xxh

DMA_CH[x]_ADDR_BYTE Register Map

7	6	5	4	3	2	1	0
DMA_CH_ADDR_BYTE							

DMA_CH[x]_ADDR_BYTE Bit Descriptions

Bit	Name	Description
7:0	DMA_CH_ADDR_BYTE	**DMA Channel Address.** Read/write in two successive bus cycles, low byte first.

6.13.2.12 Master DMA Channel [7:4] Transfer Count (DMA_CH[x]_CNT_BYTE)

Master DMA Channel 4 Transfer Count (DMA_CH4_CNT_BYTE)
I/O Address 0C2h
Type R/W
Reset Value xxh

Master DMA Channel 5 Transfer Count (DMA_CH5_CNT_BYTE)
I/O Address 0C6h
Type R/W
Reset Value xxh

Master DMA Channel 6 Transfer Count (DMA_CH6_CNT_BYTE)
I/O Address 0CAh
Type R/W
Reset Value xxh

Master DMA Channel 7 Transfer Count (DMA_CH7_CNT_BYTE)
I/O Address 0CEh
Type R/W
Reset Value xxh

DMA_CH[x]_CNT_BYTE Register Map

7	6	5	4	3	2	1	0
DMA_CH_CNT_BYTE							

DMA_CH[x]_CNT_BYTE Bit Descriptions

Bit	Name	Description
7:0	DMA_CH_CNT_BYTE	**DMA Channel Transfer Count.** Read/write in two successive bus cycles, low byte first.

Downloaded from Arrow.com.

6.13.2.13 DMA Channel [7:4] Status / Command

Master DMA Channel [7:4] Status (DMA_CH7:4_STS)

I/O Address 0D0h
Type R
Reset Value 00h

DMA_CH7:4_STS Register Map

7	6	5	4	3	2	1	0
DMA_CH7_RQ	DMA_CH6_RQ	DMA_CH5_RQ	DMA_CH4_RQ	DMA_CH7_TC	DMA_CH6_TC	DMA_CH5_TC	DMA_CH4_TC

DMA_CH7:4_STS Bit Descriptions

Bit	Name	Description
7	DMA_CH7_RQ	**Channel 7 DMA Request.** 0: Not pending; 1: Pending.
6	DMA_CH6_RQ	**Channel 6 DMA Request.** 0: Not pending; 1: Pending.
5	DMA_CH5_RQ	**Channel 5 DMA Request.** 0: Not pending; 1: Pending.
4	DMA_CH4_RQ	**Channel 4 DMA Request.** 0: Not pending; 1: Pending.
3	DMA_CH7_TC	**Channel 7 Terminal Count.** 0: Count not reached; 1: Count reached.
2	DMA_CH6_TC	**Channel 6 Terminal Count.** 0: Count not reached; 1: Count reached.
1	DMA_CH5_TC	**Channel 5 Terminal Count.** 0: Count not reached; 1: Count reached.
0	DMA_CH4_TC	**Channel 4 Terminal Count.** 0: Count not reached; 1: Count reached.

Master DMA Channel [7:4] Command (DMA_CH7:4_CMD)

I/O Address 0D0h
Type W
Reset Value xxh

DMA_CH7:4_CMD Register Map

7	6	5	4	3	2	1	0
DACK_SENSE	DREQ_SENSE	WR_TIMING	PR_MODE	TM_MODE	DMA_DIS	RSVD	

DMA_CH7:4_CMD Bit Descriptions

Bit	Name	Description
7	DACK_SENSE	**DACK Sense.** 0: Active low; 1: Active high.
6	DREQ_SENSE	**DREQ Sense.** 0: Active high; 1: Active low.
5	WR_TIMING	**Write Timing.** 0: Late write; 1: Extended write.
4	PR_MODE	**Priority Mode.** 0: Fixed priority; 1: Rotating priority.
3	TM_MODE	**Timing Mode.** 0: Normal timing; 1: Compressed timing.
2	DMA_DIS	**DMA Disable.** 0: DMA enable for Channels [7:4]; 1: DMA disable for Channels [7:4].
1:0	RSVD	**Reserved.** Bit 0 must be written with value 0; bit 1 value is don't care.

Downloaded from Arrow.com.

6.13.2.14 Master DMA Channel [7:4] Software Request (DMA_CH7:4_SFT_REQ)

I/O Address 0D2h
Type WO
Reset Value xxh

DMA_CH7:4_SFT_REQ Register Map

7	6	5	4	3	2	1	0
RSVD					DMA_RQ	DMA_CH_SEL	

DMA_CH7:4_SFT_REQ Bit Descriptions

Bit	Name	Description
7:3	RSVD	**Reserved.** Write value is don't care.
2	DMA_RQ	**DMA Request.** Set to 1 to enable DMA request.
1:0	DMA_CH_SEL	**DMA Channel Select.** 00: Channel 4. 10: Channel 6. 01: Channel 5. 11: Channel 7.

6.13.2.15 Master DMA Channel [7:4] Channel Mask (DMA_CH7:4_CHMSK)

I/O Address 0D4h
Type WO
Reset Value xxh

DMA_CH7:4_CHMSK Register Map

7	6	5	4	3	2	1	0
RSVD					CH_MASK	DMA_CH_SEL	

DMA_CH7:4_CHMSK Bit Descriptions

Bit	Name	Description
7:3	RSVD	**Reserved.** Write value is don't care.
2	CH_MASK	**Channel Mask.** Set to 1 to mask out DMA for selected channel.
1:0	DMA_CH_SEL	**DMA Channel Select.** 00: Channel 4. 10: Channel 6. 01: Channel 5. 11: Channel 7.

6.13.2.16 Master DMA Channel [7:4] Mode (DMA_CH7:4_MODE)

I/O Address 0D6h
Type WO
Reset Value xxh

DMA_CH7:4_MODE Register Map

7	6	5	4	3	2	1	0
TRANS_MODE		ADDR_DIR	AUTO_INIT	TRANS_TYPE		DMA_CH_SEL	

Downloaded from Arrow.com.

DMA_CH7:4_MODE Bit Descriptions

Bit	Name	Description
7:6	TRANS_MODE	**Data Transfer Mode.** 00: Demand. 10: Block. 01: Single. 11: Cascade.
5	ADDR_DIR	**Address Direction.** 0: Increment; 1: Decrement.
5	AUTO_INIT	**Auto-Initialization Enable.** 0: Disabled; 1: Enabled.
3:2	TRANS_TYPE	**Transfer Type.** 00: Verify. 10: Memory read. 01: Memory write. 11: Reserved
1:0	DMA_CH_SEL	**DMA Channel Select.** 00: Channel 4. 10: Channel 6. 01: Channel 5. 11: Channel 7.

6.13.2.17 Master DMA Channel [7:4] Clear Byte Pointer (DMA_CH7:4_CLR_PNTR)

I/O Address 0D8h
Type WO
Reset Value xxh

DMA_CH7:4_CLR_PNTR Register Map

7	6	5	4	3	2	1	0
CLR_PNTR (DUMMY_VAL)							

DMA_CH7:4_CLR_PNTR Bit Descriptions

Bit	Name	Description
7:0	CLR_PNTR	**Clear Pointer.** A write with any data (dummy value) resets high/low byte pointer for Channels [7:4] memory address and terminal count registers.

6.13.2.18 Master DMA Channel [7:4] Master Clear (DMA_CH7:4_MSTR_CLR)

I/O Address Offset 0DAh
Type WO
Reset Value xxh

DMA_CH7:4_MSTR_CLR Register Descriptions

7	6	5	4	3	2	1	0
MSTR_CLR (DUMMY_VAL)							

DMA_CH7:4_MSTR_CLR Bit Descriptions

Bit	Name	Description
7:0	MSTR_CLR	**Master Clear.** A write with any data (dummy value) resets the 8237 DMA controller for Channels [7:4].

Downloaded from Arrow.com.

6.13.2.19 Master DMA Channel [7:4] Clear Mask (DMA_CH7:4_CLR_MSK)

I/O Address Offset 0DCh
Type WO
Reset Value xxh

DMA_CH7:4_CLR_MSK Register for Channels 7:4

7	6	5	4	3	2	1	0
CLR_MSK (DUMMY_VAL)							

DMA_CH7:4_CLR_MSK Bit Descriptions

Bit	Name	Description
7:0	CLR_MSK	**Clear Mask.** A write with any data (dummy value) clears the mask bits for Channels [7:4].

6.13.2.20 Master DMA Channel [7:4] Write Mask (DMA_CH7:4_WR_MSK)

I/O Address 0DEh
Type WO
Reset Value 0Fh

DMA_CH7:4_WR_MSK Register Map

7	6	5	4	3	2	1	0
RSVD				CH7_MASK	CH6_MASK	CH5_MASK	CH4_MASK

DMA_CH7:4_WR_MSK Bit Descriptions

Bit	Name	Description
7:4	RSVD	**Reserved.** Write value is don't care.
3	CH7_MASK	**Channel 7 Mask Value.** 0: Not masked; 1: Masked.
2	CH6_MASK	**Channel 6 Mask Value.** 0: Not masked; 1: Masked.
1	CH5_MASK	**Channel 5 Mask Value.** 0: Not masked; 1: Masked.
0	CH4_MASK	**Channel 4 Mask Value.** 0: Not masked; 1: Masked.

Downloaded from Arrow.com.

6.13.2.21 Post Code Display Register (POST_DISPLAY)

I/O Address 080h
Type R/W
Reset Value 00h

POST_DISPLAY Register Map

7	6	5	4	3	2	1	0
POST_CODE							

POST_DISPLAY Bit Descriptions

Bit	Name	Description
7:0	POST_CODE	**Post Code Display Value.** This register is the historical Port 80 that receives the POST (Power-On Self-Test) codes reported during initialization. Typically used by the BIOS, Port 80 may also be written to by any piece of executing software to provide status or other information. The most recent value written to Port 80 is recorded in this register.

6.13.2.22 DMA Channel [3:0] Low Page (DMA_CH[x]_LO_PAGE)

DMA Channel 2 Low Page (DMA_CH2_LO_PAGE)
I/O Address 081h
Type R/W
Reset Value 00h

DMA Channel 1 Low Page (DMA_CH1_LO_PAGE)
I/O Address 083h
Type R/W
Reset Value 00h

DMA Channel 3 Low Page (DMA_CH3_LO_PAGE)
I/O Address 082h
Type R/W
Reset Value 00h

DMA Channel 0 Low Page (DMA_CH0_LO_PAGE)
I/O Address Offset 087h
Type R/W
Reset Value 00h

DMA_CH[x]_LO_PAGE Register Map

7	6	5	4	3	2	1	0
DMA_CH_LO_PAGE							

DMA_CH[x]_LO_PAGE Bit Descriptions

Bit	Name	Description
7:0	DMA_CH_LO_PAGE	**DMA Channel Low Page Value.** Address bits [23:16].

Downloaded from Arrow.com.

6.13.2.23 DMA Channel [7:4] Low Page (DMA_CH[x]_LO_PAGE)

DMA Channel 6 Low Page (DMA_CH6_LO_PAGE)
I/O Address 089h
Type R/W
Reset Value 00h

DMA Channel 5 Low Page (DMA_CH5_LO_PAGE)
I/O Address 08Bh
Type R/W
Reset Value 00h

DMA Channel 7 Low Page (DMA_CH7_LO_PAGE)
I/O Address 08Ah
Type R/W
Reset Value 00h

DMA Channel 4 Low Page (DMA_CH4_LO_PAGE)
I/O Address 08Fh
Type R/W
Reset Value 00h

DMA_CH[x]_LO_PAGE Register Map

7	6	5	4	3	2	1	0
DMA_CH_LO_PAGE							RSVD

DMA_CH[x]_LO_PAGE Bit Descriptions

Bit	Name	Description
7:1	DMA_CH_LO_PAGE	**DMA Channel Low Page Value.** Address bits [23:17].
0	RSVD	**Reserved.** Not used to generate DMA address. Write value is don't care; reads return value written.

Downloaded from Arrow.com.

6.13.2.24 DMA Channel [7:0] High Page (DMA_CH[x]_HI_PAGE)

DMA Channel 2 High Page (DMA_CH2_HI_PAGE)
I/O Address 481h
Type R/W
Reset Value 00h

This register is also cleared on any access to I/O Port 81h.

DMA Channel 3 High Page (DMA_CH3_HI_PAGE)
I/O Address 482h
Type R/W
Reset Value 00h

This register is also cleared on any access to I/O Port 82h.

DMA Channel 1 High Page (DMA_CH1_HI_PAGE)
I/O Address 483h
Type R/W
Reset Value 00h

This register is also cleared on any access to I/O Port 83h.

DMA Channel 0 High Page (DMA_CH0_HI_PAGE)
I/O Address 487h
Type R/W
Reset Value 00h

This register is also cleared on any access to I/O Port 87h.

DMA Channel 6 High Page (DMA_CH6_HI_PAGE)
I/O Address 489h
Type R/W
Reset Value 00h

This register is also cleared on any access to I/O Port 89h.

DMA Channel 7 High Page (DMA_CH7_HI_PAGE)
I/O Address Offset 48Ah
Type R/W
Reset Value 00h

This register is also cleared on any access to I/O Port 8Ah.

DMA Channel 5 High Page (DMA_CH5_HI_PAGE)
I/O Address 48Bh
Type R/W
Reset Value 00h

This register is also cleared on any access to I/O Port 8Bh.

DMA Channel 4 High Page (DMA_CH4_HI_PAGE)
I/O Address 48Fh
Type R/W
Reset Value 00h

This register is also cleared on any access to I/O Port 8Fh.

DMA_CH[x]_HI_PAGE Register Map

7	6	5	4	3	2	1	0
DMA_CH_HI_PAGE							

DMA_CH[x]_HI_PAGE Bit Descriptions

Bit	Name	Description
7:0	DMA_CH_HI_PAGE	**DMA Channel High Page Value.** Address bits [31:24].

Downloaded from Arrow.com.

6.14 Low Pin Count Register Descriptions

The registers for the Low Pin Count (LPC) port are divided into two sets:

- Standard GeodeLink™ Device MSRs (Shared with DIVIL, see Section 6.6.1 on page 348.)
- LPC Specific MSRs

The MSRs are accessed via the RDMSR and WRMSR processor instructions. The MSR address is derived from the perspective of the CPU Core. See Section 4.2 "MSR Addressing" on page 60 for more details on MSR addressing.

All MSRs are 64 bits, however, the LPC Specific MSRs are called out as 32 bits. The LPC device treats writes to the upper 32 bits (i.e., bits [63:32]) of the 64-bit MSRs as don't cares and always returns 0 on these bits.

The LPC Specific MSRs are summarized in Table 6-57.

Table 6-57. LPC Specific MSRs Summary

MSR Address	Type	Register Name	Reset Value	Reference
5140004Ch	RO	LPC Address Error (LPC_EADDR)	00000000h	Page 466
5140004Dh	RO	LPC Error Status (LPC_ESTAT)	00000000h	Page 466
5140004Eh	R/W	LPC Serial IRQ Control (LPC_SIRQ)	00000000h	Page 466
5140004Fh	R/W	LPC Reserved (LPC_RSVD)	00000000h	Page 466

6.14.1 LPC Specific MSRs

The LPC Controller uses the MSR_LPC_EADDR and MSR_LPC_ESTAT to record the indicated information associated with any given LPC bus error. The recorded information can not be cleared or modified. Simultaneous with this recording, an error event is sent to the DIVIL GLD_MSR_ERROR (MSR 51400003h). If enabled at the DIVIL GLD_MSR_ERROR, any LPC error event is recorded with a flag. This flag can be cleared. The status of this flag should be used to determine if there is an outstanding error associated with the two MSRs below.

6.14.1.1 LPC Address Error (LPC_EADDR)

MSR Address 5140004Ch
Type RO
Reset Value 00000000h

LPC_EADDR Register Map

31	30	29	28	27	26	25	24	23	22	21	20	19	18	17	16	15	14	13	12	11	10	9	8	7	6	5	4	3	2	1	0
LPC_ERR_ADDR																															

LPC_EADDR Bit Descriptions

Bit	Name	Description
31:0	LPC_ERR_ADDR	**LPC Error Address.** When an error occurs, this register captures the associated 32-bit address.

Downloaded from Arrow.com.

6.14.1.2 LPC Error Status (LPC_ESTAT)

MSR Address 5140004Dh
Type RO
Reset Value 00000000h

LPC_ESTAT Register Map

31	30	29	28	27	26	25	24	23	22	21	20	19	18	17	16	15	14	13	12	11	10	9	8	7	6	5	4	3	2	1	0
RSVD																												TIMEOUT	DMA	WRITE	MEMORY

ESTAT Bit Descriptions

Bit	Name	Description
31:4	RSVD	**Reserved.** Reads as 0.
3	TIMEOUT	**Timeout.** If set, indicates an LPC error was caused by a timeout.
2	DMA	**DMA.** If set, indicates an LPC error occurred during a DMA transaction.
1	WRITE	**Write.** If set, indicates an LPC error occurred during an LPC write transaction.
0	MEMORY	**Memory.** If set, indicates an LPC error occurred during an LPC memory transaction.

6.14.1.3 LPC Serial IRQ Control (LPC_SIRQ)

MSR Address 5140004Eh
Type R/W
Reset Value 00000000h

LPC_SIRQ Register Map

31	30	29	28	27	26	25	24	23	22	21	20	19	18	17	16	15	14	13	12	11	10	9	8	7	6	5	4	3	2	1	0
INVERT[15:0]																RSVD								SIRQ_EN	SIRQ_MODE	IRQ_FRAME				START_FPW	

LPC_SIRQ Bit Descriptions

Bit	Name	Description
31:16	INVERT[15:0]	**Invert bits 15 through 0.** Each invert[x] bit corresponds to an irq[x] bit. When a given x bit is 1, the corresponding serial IRQ input is assumed active low. Active low inputs are inverted and presented internally as active high inputs.
15:8	RSVD	**Reserved.** Write as 0.
7	SIRQ_EN	**Serial IRQ Enable.** 0: Disable; 1: Enable
6	SIRQ_MODE	**Serial IRQ Interface Mode.** 0: Continuous (Idle); 1: Quiet (Active)
5:2	IRQ_FRAME	**IRQ Data Frames.** Number of frames. 0000: 17 0100: 21 1000: 25 1100: 29 0001: 18 0101: 22 1001: 26 1101: 30 0010: 19 0110: 23 1010: 27 1110: 31 0011: 20 0111: 24 1011: 28 1111: 32

Downloaded from Arrow.com.

LPC_SIRQ Bit Descriptions (Continued)

Bit	Name	Description
1:0	START_FPW	**Start Frame Pulse Width**. Sets the start frame pulse width, specified by the number of clocks. 00: 4 clocks. 10: 8 clocks. 01: 6 clocks. 11: Reserved.

6.14.1.4 LPC Reserved (LPC_RSVD)

MSR Address 5140004Fh
Type R/W
Reset Value 00000000h

LPC_RSVD Register Map

31	30	29	28	27	26	25	24	23	22	21	20	19	18	17	16	15	14	13	12	11	10	9	8	7	6	5	4	3	2	1	0
RSVD																															

LPC_RSVD Bit Descriptions

Bit	Name	Description
31:0	RSVD	**Reserved.** Reads return 0. Writes have no effect.

Downloaded from Arrow.com.

6.15 Real-Time Clock Register Descriptions

The registers for the Real-Time Clock (RTC) are divided into three sets:

- Standard GeodeLink™ Device MSRs (Shared with DIVIL, see Section 6.6.1 on page 348.)
- RTC Specific MSRs
- RTC Native Registers

The MSRs are accessed via the RDMSR and WRMSR processor instructions. The MSR address is derived from the perspective of the CPU Core. See Section 4.2 "MSR Addressing" on page 60 for more details on MSR addressing.

All MSRs are 64 bits, however, the RTC Specific MSRs (summarized in Table 6-58) are called out as 8 bits. The RTC device treats writes to the upper 56 bits (i.e., bits [63:8]) of the 64-bit MSRs as don't cares and always returns 0 on these bits.

The Native registers associated with the RTC device are summarized in Table 6-59 and are accessed as I/O Addresses.

The reference column in the summary tables point to the page where the register maps and bit descriptions are listed.

Table 6-58. RTC Specific MSRs Summary

MSR Address	Type	Register Name	Reset Value	Reference
51400054h	R/W	RTC RAM Lock (RTC_RAM_LOCK)	00h	Page 470
51400055h	R/W	RTC Date of Month Alarm Offset (RTC_DOMA_OFFSET)	00h	Page 470
51400056h	R/W	RTC Month Alarm Offset (RTC_MONA_OFFSET)	00h	Page 471
51400057h	R/W	RTC Century Offset (RTC_CEN_OFFSET)	00h	Page 471

Table 6-59. RTC Native Registers Summary

I/O Address	Type	Register Name	Reset Value	Reference
00h	R/W	Seconds (RTC_SEC)	00h	Page 472
01h	R/W	Seconds Alarm (RTC_SECA)	00h	Page 472
02h	R/W	Minutes (RTC_MIN)	00h	Page 472
03h	R/W	Minutes Alarm (RTC_MINA)	00h	Page 473
04h	R/W	Hours (RTC_HR)	00h	Page 473
05h	R/W	Hours Alarm (RTC_HRA	00h	Page 473
06h	R/W	Day of Week (RTC_DOW)	00h	Page 474
07h	R/W	Day of Month (RTC_DOM)	00h	Page 474
08h	R/W	Month (RTC_MONTH)	00h	Page 474
09h	R/W	Year (RTC_YEAR)	00h	Page 475
0Ah	R/W	RTC Control Register A (RTC_CRA)	20h	Page 475
0Bh	R/W	RTC Control Register B (RTC_CRB)	00h	Page 476
0Ch	RO	RTC Control Register C (RTC_CRC)	00h	Page 477
0Dh	RO	RTC Control Register D (RTC_CRD)	00h	Page 478
Programmable (Note 1)	R/W	Date of Month Alarm (RTC_DOMA)	C0h	Page 478
Programmable (Note 1)	R/W	Month Alarm (RTC_MONA)	00h	Page 479
Programmable (Note 1)	R/W	Century (RTC_CEN)	00h	Page 479

Note 1. Register location is programmable (through the MSR registers) and overlay onto the lower RAM space.

Downloaded from Arrow.com.

6.15.1 RTC Specific MSRs

6.15.1.1 RTC RAM Lock (RTC_RAM_LOCK)

MSR Address 51400054h
Type R/W
Reset Value 00h

When a non-reserved bit is set to 1, it can only be cleared by hardware reset.

RTC_RAM_LOCK Register Map

7	6	5	4	3	2	1	0
BLK_STDRAM	BLK_RAM_WR	BLK_XRAM_WR	BLK_XRAM_RD	BLK_XRAM	RSVD		

RTC_RAM_LOCK Bit Descriptions

Bit	Name	Description
7	BLK_STDRAM	**Block Standard RAM.** 0: No effect on Standard RAM access. (Default) 1: Read and write to locations 38h-3Fh of the Standard RAM are blocked, writes ignored, and reads return FFh.
6	BLK_RAM_WR	**Block RAM Write.** 0: No effect on RAM access. (Default) 1: Write to RAM (Standard and Extended) are ignored.
5	BLK_XRAM_WR	**Block Extended RAM Write.** This bit controls write to bytes 00h-1Fh of the Extended RAM. 0: No effect on Extended RAM access. (Default) 1: Writes to byte 00h-1Fh of the Extended RAM are ignored.
4	BLK_XRAM_RD	**Block Extended RAM Read**. This bit controls read from bytes 00h-1Fh of the Extended RAM. 0: No effect on Extended RAM access. (Default) 1: Reads from byte 00h-1Fh of the Extended RAM are ignored.
3	BLK_XRAM	**Block Extended RAM.** This bit controls access to the Extended RAM 128 bytes. 0: No effect on Extended RAM access. (Default) 1: Read and write to the Extended RAM are blocked; writes are ignored and reads return FFh.
2:0	RSVD	**Reserved.** Write as 0.

6.15.1.2 RTC Date of Month Alarm Offset (RTC_DOMA_OFFSET)

MSR Address 51400055h
Type R/W
Reset Value 00h

RTC_DOMA_OFFSET Register Map

7	6	5	4	3	2	1	0
RSVD	DOMA_OFST						

Downloaded from Arrow.com.

RTC_DOMA_OFFSET Bit Descriptions

Bit	Name	Description
7	RSVD	**Reserved.** Write as 0.
6:0	DOMA_OFST	**Date of Month Alarm Register Offset Value.** This register sets the location in RAM space of the Date Of Month Alarm register. This register must be programmed after a hardware reset, otherwise the Day Of Month Alarm register will be on top of other RAM data. It is programmed as an offset from 0. Reset to 00h by hardware reset.

6.15.1.3 RTC Month Alarm Offset (RTC_MONA_OFFSET)

MSR Address 51400056h
Type R/W
Reset Value 00h

RTC_MONA_OFFSET Register Map

7	6	5	4	3	2	1	0
RSVD	MONA_OFST						

RTC_MONA_OFFSET Bit Descriptions

Bit	Name	Description
7	RSVD	**Reserved.** Write as 0.
6:0	MONA_OFST	**Month Alarm Register Offset Value**. This register sets the location in RAM space of the Month Alarm register. This register must be programmed after a hardware reset, otherwise the Month Alarm register will be on top of other RAM data. It is programmed as an offset from 0. Reset to 00h by hardware reset.

6.15.1.4 RTC Century Offset (RTC_CEN_OFFSET)

MSR Address 51400057h
Type R/W
Reset Value 00h

RTC_CEN_OFFSET Register Map

7	6	5	4	3	2	1	0
RSVD	CEN_OFST						

RTC_CEN_OFFSET Bit Descriptions

Bit	Name	Description
7	RSVD	**Reserved.** Write as 0.
6:0	CEN_OSFT	**Century Register Offset Value**. This register sets the location in RAM space of the Century register. This register must be programmed after a hardware reset, otherwise the Century register will be on top of other RAM data. It is programmed as an offset from 0. Reset to 00h by hardware reset.

Downloaded from Arrow.com.

6.15.2 RTC Native Registers

6.15.2.1 Seconds (RTC_SEC)

I/O Address 00h
Type R/W
Reset Value 00h

RTC_SEC Register Map

7	6	5	4	3	2	1	0
SEC_DATA							

RTC_SEC Bit Descriptions

Bit	Name	Description
7:0	SEC_DATA	**Seconds Data.** Values may be 00 to 59 in BCD (binary coded decimal) format or 00 to 3B in binary format. Reset by V_{PP} power-up.

6.15.2.2 Seconds Alarm (RTC_SECA)

I/O Address 01h
Type R/W
Reset Value 00h

RTC_SECA Register Map

7	6	5	4	3	2	1	0
SECA_DATA							

RTC_SECA Bit Descriptions

Bit	Name	Description
7:0	SECA_DATA	**Seconds Alarm Data.** Values may be 00 to 59 in BCD format or 00 to 3B in binary format. When bits 7 and 6 are both set to one, an unconditional match is selected. Reset by V_{PP} power-up.

6.15.2.3 Minutes (RTC_MIN)

I/O Address 02h
Type R/W
Reset Value 00h

RTC_MIN Register Map

7	6	5	4	3	2	1	0
MIN_DATA							

RTC_MIN Bit Descriptions

Bit	Name	Description
7:0	MIN_DATA	**Minutes Data.** Values may be 00 to 59 in BCD format or 00 to 3B in binary format. Reset by V_{PP} power-up.

Downloaded from Arrow.com.

6.15.2.4 Minutes Alarm (RTC_MINA)

I/O Address 03h
Type R/W
Reset Value 00h

RTC_MINA Register Map

7	6	5	4	3	2	1	0
MINA_DATA							

RTC_MINA Bit Descriptions

Bit	Name	Description
7:0	MINA_DATA	**Minutes Alarm Data.** Values may be 00 to 59 in BCD format or 00 to 3B in binary format. When bits 7 and 6 are both set to one, an unconditional match is selected. Reset by V_{PP} power-up.

6.15.2.5 Hours (RTC_HR)

I/O Address 04h
Type R/W
Reset Value 00h

RTC_HR Register Map

7	6	5	4	3	2	1	0
HR_DATA							

RTC_HR Bit Descriptions

Bit	Name	Description
7:0	HR_DATA	**Hours Data.** For 12-hour mode, values can be 01 to 12 (AM) and 81 to 92 (PM) in BCD format, or 01 to 0C (AM) and 81 to 8C (PM) in binary format. For 24-hour mode, values can be 0 to 23 in BCD format or 00 to 17 in binary format. Reset by V_{PP} power-up.

6.15.2.6 Hours Alarm

I/O Address 05h
Type R/W
Reset Value 00h

RTC_HRA Register Map

7	6	5	4	3	2	1	0
HRA_DATA							

RTC_HRA Bit Descriptions

Bit	Name	Description
7:0	HRA_DATA	**Hours Alarm Data.** For 12-hour mode, values can be 01 to 12 (AM) and 81 to 92 (PM) in BCD format, or 01 to 0C (AM) and 81 to 8C (PM) in binary format. For 24-hour mode, values can be 0 to 23 in BCD format or 00 to 17 in binary format. When bits 7 and 6 are both set to one, unconditional match is selected. Reset by V_{PP} power-up.

Downloaded from Arrow.com.

6.15.2.7 Day of Week (RTC_DOW)

I/O Address 06h
Type R/W
Reset Value 00h

RTC_DOW Register Map

7	6	5	4	3	2	1	0
DOW_DATA							

RTC_DOW Bit Descriptions

Bit	Name	Description
7:0	DOW_DATA	**Day of Week Data.** Values may be 01 to 07 in BCD format or 01 to 07 in binary format. Reset by V_{PP} power-up.

6.15.2.8 Day of Month (RTC_DOM)

I/O Address 07h
Type R/W
Reset Value 00h

RTC_DOM Register Map

7	6	5	4	3	2	1	0
DOM_DATA							

RTC_DOM Bit Descriptions

Bit	Name	Description
7:0	DOM_DATA	**Day of Month Data.** Values may be 01 to 31 in BCD format or 01 to 0F in binary format. Reset by V_{PP} power-up.

6.15.2.9 Month (RTC_MONTH)

I/O Address 08h
Type R/W
Reset Value 00h

RTC_MON Register Map

7	6	5	4	3	2	1	0
MON_DATA							

RTC_MON Bit Descriptions

Bit	Name	Description
7:0	MON_DATA	**Month Data.** Values may be 01 to 12 in BCD format or 01 to 0C in binary format. Reset by V_{PP} power-up.

Downloaded from Arrow.com.

6.15.2.10 Year (RTC_YEAR)

I/O Address 09h
Type R/W
Reset Value 00h

RTC_YR Register Map

7	6	5	4	3	2	1	0
YR_DATA							

RTC_YR Bit Descriptions

Bit	Name	Description
7:0	YR_DATA	**Year Data.** This register holds the two least significant digits of a four-digit year. For example, if the year is 2007, this register would contain the equivalent of '07'. Values may be 00 to 99 in BCD format or 00 to 63 in binary format. Reset by V_{PP} power-up.

6.15.2.11 RTC Control Register A (RTC_CRA)

I/O Address 0Ah
Type R/W
Reset Value 20h

This register controls test selection among other functions. This register cannot be written before reading bit 7 of RTC_CRD (VRT bit).

RTC_CRA Register Map

7	6	5	4	3	2	1	0
UIP	DIV_CHN_CTL			PIR_SEL			

RTC_CRA Bit Descriptions

Bit	Name	Description
7	UIP (RO)	**Update in Progress (Read Only).** This bit is not affected by reset. This bit reads 0 when I/O Address 0Bh[7] = 1. 0: Timing registers not updated within 244 µs. 1: Timing registers updated within 244 µs.
6:4	DIV_CHN_CTL	**Divider Chain Control.** These bits control the configuration of the divider chain for timing generation and register bank selection. They are cleared to 010 as long as I/O Address 0Dh[7] = 0. 00x: Oscillator Disabled. 010: Normal Operation. 011: Test. 10x: Test. 11x: Divider Chain Reset.
3:0	PIR_SEL	**Periodic Interrupt Rate Select**: These bits select one of fifteen output taps from the clock divider chain to control the rate of the periodic interrupt. They are cleared to 000 as long as I/O Address 0Dh[7] = 0. 0000: No interrupts 0001: 3.906250 ms 0010: 7.812500 ms 0011: 0.122070 ms 0100: 0.244141 ms 0101: 0.488281 ms 0110: 0.976562 ms 0111: 1.953125 ms 1000: 3.906250 ms 1001: 7.812500 ms 1010: 15.625000 ms 1011: 31.250000 ms 1100: 62.500000 ms 1101: 125.000000 ms 1110: 250.000000 ms 1111: 500.000000 ms

Downloaded from Arrow.com.

6.15.2.12 RTC Control Register B (RTC_CRB)

I/O Address 0Bh
Type R/W
Reset Value 00h

RTC_CRB Register Map

7	6	5	4	3	2	1	0
SET_MODE	PI_EN	AI_EN	UEI_EN	RSVD	DATA_MODE	HR_MODE	DAY_SAVE

RTC_CRB Bit Descriptions

Bit	Name	Description
7	SET_MODE	**Set Mode.** This bit is reset at V_{PP} power-up reset only. 0: Timing updates occur normally 1: User copy of time is “frozen”, allowing the time registers to be accessed whether or not an update occurs.
6	PI_EN	**Periodic Interrupts Enable.** I/O Address 0Ah[3:0] determine the rate at which this interrupt is generated. It is cleared to 0 on an RTC reset (i.e., hardware reset) or when the RTC is disable. 0: Disable. 1: Enable.
5	AI_EN	**Alarm Interrupt Enable.** This interrupt is generated immediately after a time update in which the seconds, minutes, hours, date and month time equal their respective alarm counterparts. It is cleared to 0 as long as I/O Address 0Dh[7] reads 0. 0: Disable. 1: Enable.
4	UEI_EN	**Update Ended Interrupts Enable.** This interrupt is generated when an update occurs. It is cleared to 0 on an RTC reset (i.e., hardware reset) or when the RTC is disabled. 0: Disable. 1: Enable.
3	RSVD	**Reserved.** This bit is defined as “Square Wave Enable” by the MC146818 and is not supported by the RTC. This bit is always read as 0.
2	DATA_MODE	**Data Mode.** Selects data mode. This bit is reset at V_{PP} power-up reset only. 0: BCD format. 1: Binary format.
1	HR_MODE	**Hour Mode.** Selects hour mode. This bit is reset at V_{PP} power-up reset only. 0: 12-hour format. 1: 24-hour format.
0	DAY_SAVE	**Daylight Saving**. Enables/disables daylight savings mode. This bit is reset at V_{PP} power-up reset only. 0: Disable. 1: Enable. In the spring, time advances from 1:59:59 AM to 3:00:00 AM on the first Sunday in April. In the fall, time returns from 1:59:59 AM to 1:00:00 AM on the last Sunday in October.

Downloaded from Arrow.com.

6.15.2.13 RTC Control Register C (RTC_CRC)

I/O Address 0Ch
Type RO
Reset Value 00h

RTC_CRC Register Map

7	6	5	4	3	2	1	0
IRQF	PF	AF	UF	RSVD			

RTC_CRC Bit Descriptions

Bit	Name	Description
7	IRQF	**IRQ Flag.** This bit mirrors the value on the interrupt output signal. When interrupt is active, IRQF is 1. Reading this register clears this bit (and deactivates the interrupt pin) and clears the flag bits UF, AF, and PF. 0: IRQ inactive. 1: Logic equation is true: ((UIE and UF) or (AIE and AF) or (PIE and PF)).
6	PF	**Periodic Interrupts Flag.** This bit is cleared to 0 on an RTC reset (i.e., hardware reset) or when the RTC is disabled. In addition, this bit is cleared to 0 when this register is read. 0: No transition occurred on the selected tap since the last read. 1: Transition occurred on the selected tap of the divider chain.
5	AF	**Alarm Interrupt Flag.** This bit is cleared to 0 as long as I/O Address 0Dh[7] = 0. In addition, this bit is cleared to 0 when this register is read. 0: No alarm detected since the last read. 1: Alarm condition detected.
4	UF	**Update Ended Interrupts Flag.** This bit is cleared to 0 on an RTC reset (i.e., hardware reset) or when the RTC is disabled. In addition, this bit is cleared to 0 when this register is read. 0: No update occurred since the last read. 1: Time registers updated.
3:0	RSVD	**Reserved.** Reads as 0.

Downloaded from Arrow.com.

6.15.2.14 RTC Control Register D (RTC_CRD)

I/O Address 0Dh
Type RO
Reset Value 00h

RTC_CRD Register Map

7	6	5	4	3	2	1	0
VRT	RSVD						

RTC_CRD Bit Descriptions

Bit	Name	Description
7	VRT	**Valid RAM and Time.** This bit senses the voltage that feeds the RTC (VSB or VBAT) and indicates whether or not it was too low since the last time this bit was read. If it was too low, the RTC contents (time/calendar registers and CMOS RAM) is not valid. It is clear on V_{PP} power-up. 0: The voltage that feeds the RTC was too low. 1: RTC contents (time/calendar registers and CMOS RAM) valid.
6:0	RSVD	**Reserved.** Reads as 0.

6.15.2.15 Date of Month Alarm (RTC_DOMA)

I/O Address Programmable
Type R/W
Reset Value C0h

RTC_DOMA Register Map

7	6	5	4	3	2	1	0
DOMA_DATA							

RTC_DOMA Bit Descriptions

Bit	Name	Description
7:0	DOMA_DATA	**Date of Month Alarm Data.** Values may be 01 to 31 in BCD format or 01 to 1F in binary format. When bits 7 and 6 are both set to one, an unconditional match is selected. (Default) Reset by V_{PP} power-up.

Downloaded from Arrow.com.

6.15.2.16 Month Alarm (RTC_MONA)

I/O Address Programmable
Type R/W
Reset Value C0h

RTC_MONA Register Map

7	6	5	4	3	2	1	0
MONA_DATA							

RTC_MONA Bit Descriptions

Bit	Name	Description
7:0	MONA_DATA	**Month Alarm Data.** Values may be 01 to 12 in BCD format or 01 to 0C in binary format. When bits 7 and 6 are both set to one, an unconditional match is selected. (Default) Reset by V_{PP} power-up.

6.15.2.17 Century (RTC_CEN)

I/O Address Programmable
Type R/W
Reset Value 00h

RTC_CEN Register Map

7	6	5	4	3	2	1	0
CEN_DATA							

RTC_CEN Bit Descriptions

Bit	Name	Description
7:0	CEN_DATA	**Century Data.** This register holds the two most significant digits of a four-digit year. For example, if the year is 2008, this register would contain the equivalent of ‘20’. Values may be 00 to 99 in BCD format or 00 to 63 in binary format. Reset by V_{PP} power-up.

Downloaded from Arrow.com.

6.16 GPIO Device Register Descriptions

The registers for the General Purpose Input Output (GPIO) are divided into two sets:

- Standard GeodeLink™ Device MSRs (Shared with DIVIL, see Section 6.6.1 on page 348.)
- GPIO Native Registers
  - — GPIO Low/High Bank Feature Bit Registers Summary
  - — GPIO Input Conditioning Function Registers Summary
  - — GPIO Interrupt and PME Mapper Registers Summary

The MSRs are accessed via the RDMSR and WRMSR processor instructions. The MSR address is derived from the perspective of the CPU Core. See Section 4.2 "MSR Addressing" on page 60 for more details on MSR addressing.

The GPIO Native registers are accessed via a Base Address Register, MSR_LBAR_GPIO (MSR 5140000Ch), as I/O Offsets. (See Section 6.6.2.4 on page 358 for bit descriptions of the Base Address Register.)

The Native registers associated with GPIO configuration are broadly divided into three categories:

1) GPIO Low/High Bank Feature Bit Registers.
These registers (summarized in Table 6-60) control basic GPIO features. The Feature Bit registers use the atomic programming model except where noted. See Section 6.16.1 "Atomic Bit Programming Model" on page 484 for details.

2) Input Conditioning Function Registers.
These registers (summarized in Table 6-61 on page 482) are associated with the eight digital filter/event counter pairs that can be shared with the 32 GPIOs. These registers are not based on the atomic bit programming model.

3) GPIO Interrupt and PME Mapper Registers.
These registers (summarized in Table 6-62 on page 483) are used for mapping any GPIO to one of the eight PIC-level interrupts or to one of the eight PME (Power Management Event) inputs.

Note: The *Low Bank* refers to GPIO[15:0] while the *High Bank* refers to GPIO[31:16]

All register bits dealing with GPIO31, GPIO30, GPIO29 and GPIO23 are reserved.

Table 6-60. GPIO Low/High Bank Feature Bit Registers Summary

GPIO I/O Offset	Type	Width (Bits)	Register Name	Reset Value	Reference
GPIO Low Bank Feature Bit Registers					
00h	R/W	32	GPIO Low Bank Output Value (GPIOL_OUT_VAL)	FFFF0000h	Page 486
04h	R/W	32	GPIO Low Bank Output Enable (GPIOL_OUT_EN)	FFFF0000h	Page 486
08h	R/W	32	GPIO Low Bank Output Open-Drain Enable (GPIOL_OUT_OD_EN)	FFFF0000h	Page 487
0Ch	R/W	32	GPIO Low Bank Output Invert Enable (GPIOL_OUT_INVRT_EN)	FFFF0000h	Page 487
10h	R/W	32	GPIO Low Bank Output Auxiliary 1 Select (GPIOL_OUT_AUX1_SEL)	FFFF0000h	Page 488
14h	R/W	32	GPIO Low Bank Output Auxiliary 2 Select (GPIOL_OUT_AUX2_SEL)	FFFF0000h	Page 489
18h	R/W	32	GPIO Low Bank Pull-Up Enable (GPIOL_PU_EN)	1000EFFFh	Page 489
1Ch	R/W	32	GPIO Low Bank Pull-Down Enable (GPIOL_PD_EN)	EFFF1000h	Page 490
20h	R/W	32	GPIO Low Bank Input Enable (GPIOL_IN_EN)	FFFF0000h	Page 490
24h	R/W	32	GPIO Low Bank Input Invert Enable (GPIOL_IN_INV_EN)	FFFF0000h	Page 491
28h	R/W	32	GPIO Low Bank Input Filter Enable (GPIOL_IN_FLTR_EN)	FFFF0000h	Page 491
2Ch	R/W	32	GPIO Low Bank Input Event Count Enable (GPIOL_IN_EVNTCNT_EN)	FFFF0000h	Page 492
30h (Note 1)	RO	32	GPIO Low Bank Read Back (GPIOL_READ_BACK)	00000000h	Page 497

Downloaded from Arrow.com.

Table 6-60. GPIO Low/High Bank Feature Bit Registers Summary (Continued)

GPIO I/O Offset	Type	Width (Bits)	Register Name	Reset Value	Reference
34h	R/W	32	GPIO Low Bank Input Auxiliary 1 Select (GPIOL_IN_AUX1_SEL)	FFFF0000h	Page 493
38h	R/W	32	GPIO Low Bank Events Enable (GPIOL_EVNT_EN)	FFFF0000h	Page 493
3Ch (Note 1)	R/W	32	GPIO Low Bank Lock Enable (GPIOL_LOCK_EN)	00000000h	Page 498
40h	R/W	32	GPIO Low Bank Input Positive Edge Enable (GPIOL_IN_POSEDGE_EN)	FFFF0000h	Page 494
44h	R/W	32	GPIO Low Bank Input Negative Edge Enable (GPIOL_IN_NEGEDGE_EN)	FFFF0000h	Page 494
48h	R/W	32	GPIO Low Bank Input Positive Edge Status (GPIOL_IN_POSEDGE_STS)	FFFF0000h	Page 495
4Ch	R/W	32	GPIO Low Bank Input Negative Edge Status (GPIOL_IN_NEGEDGE_STS)	FFFF0000h	Page 496
GPIO High Bank Feature Bit Registers					
80h	R/W	32	GPIO High Bank Output Value (GPIOH_OUT_VAL)	FFFF0000h	Page 486
84h	R/W	32	GPIO High Bank Output Enable (GPIOH_OUT_EN)	FFFF0000h	Page 486
88h	R/W	32	GPIO High Bank Output Open-Drain Enable (GPIOH_OUT_OD_EN)	FFFF0000h	Page 487
8Ch	R/W	32	GPIO High Bank Output Invert Enable (GPIOH_OUT_INVRT_EN)	FFFF0000h	Page 487
90h	R/W	32	GPIO High Bank Output Auxiliary 1 Select (GPIOH_OUT_AUX1_SEL)	FFFF0000h	Page 488
94h	R/W	32	GPIO High Bank Output Auxiliary 2 Select (GPIOH_OUT_AUX2_SEL)	FFFF0000h	Page 489
98h	R/W	32	GPIO High Bank Pull-Up Enable (GPIOH_PU_EN)	0000FFFFh	Page 489
9Ch	R/W	32	GPIO High Bank Pull-Down Enable (GPIOH_PD_EN)	FFFF0000h	Page 490
A0h	R/W	32	GPIO High Bank Input Enable (GPIOH_IN_EN)	EFFF1000h	Page 490
A4h	R/W	32	GPIO High Bank Input Invert Enable (GPIOH_IN_INV_EN)	FFFF0000h	Page 491
A8h	R/W	32	GPIO High Bank Input Filter Enable (GPIOH_IN_FLTR_EN)	FFFF0000h	Page 491
ACh	R/W	32	GPIO High Bank Input Event Count Enable (GPIOH_IN_EVNTCNT_EN)	FFFF0000h	Page 492
B0h (Note 1)	RO	32	GPIO High Bank Read Back (GPIOH_READ_BACK)	00000000h	Page 498
B4h	R/W	32	GPIO High Bank Input Auxiliary 1 Select (GPIOH_IN_AUX1_SEL)	EFFF1000h	Page 493
B8h	R/W	32	GPIO High Bank Events Enable (GPIOH_EVNT_EN)	FFFF0000h	Page 493
BCh (Note 1)	R/W	32	GPIO High Bank Lock Enable (GPIOH_LOCK_EN)	00000000h	Page 500
C0h	R/W	32	GPIO High Bank Input Positive Edge Enable (GPIOH_IN_POSEDGE_EN)	FFFF0000h	Page 494

Downloaded from Arrow.com.

Table 6-60. GPIO Low/High Bank Feature Bit Registers Summary (Continued)

GPIO I/O Offset	Type	Width (Bits)	Register Name	Reset Value	Reference
C4h	R/W	32	GPIO High Bank Input Negative Edge Enable (GPIOH_IN_NEGEDGE_EN)	FFFF0000h	Page 494
C8h	R/W	32	GPIO High Bank Input Positive Edge Status (GPIOH_IN_POSEDGE_STS)	FFFF0000h	Page 495
CCh	R/W	32	GPIO High Bank Input Negative Edge Status (GPIOH_IN_NEGEDGE_STS)	FFFF0000h	Page 496

Note 1. The GPIO[x]_READ_BACK and GPIO[x]_LOCK_EN registers are not based on the atomic programming model (i.e., only one bit for control as opposed to two bits). See Section 6.16.1 "Atomic Bit Programming Model" on page 484 for more information on atomic programming.

Table 6-61. GPIO Input Conditioning Function Registers Summary

GPIO I/O Offset	Type	Width (Bits)	Register Name	Reset Value	Reference
50h	R/W	16	GPIO Filter 0 Amount (GPIO_FLTR0_AMNT)	0000h	Page 501
52h	R/W	16	GPIO Filter 0 Count (GPIO_FLTR0_CNT)	0000h	Page 502
54h	R/W	16	GPIO Event Counter 0 (GPIO_EVNTCNT0)	0000h	Page 503
56h	R/W	16	GPIO Event Counter 0 Compare Value (GPIO_EVNTCNT0_COMP)	0000h	Page 504
58h	R/W	16	GPIO Filter 1 Amount (GPIO_FLTR1_AMNT)	0000h	Page 501
5Ah	R/W	16	GPIO Filter 1 Count (GPIO_FLTR1_CNT)	0000h	Page 502
5Ch	R/W	16	GPIO Event Counter 1 (GPIO_EVNTCNT1)	0000h	Page 503
5Eh	R/W	16	GPIO Event Counter 1 Compare Value (GPIO_EVNTCNT1_COMP)	0000h	Page 504
60h	R/W	16	GPIO Filter 2 Amount (GPIO_FLTR2_AMNT)	0000h	Page 501
62h	R/W	16	GPIO Filter 2 Count (GPIO_FLTR2_CNT)	0000h	Page 502
64h	R/W	16	GPIO Event Counter 2 (GPIO_EVNTCNT2)	0000h	Page 503
66h	R/W	16	GPIO Event Counter 2 Compare Value (GPIO_EVNTCNT2_COMP)	0000h	Page 504
68h	R/W	16	GPIO Filter 3 Amount (GPIO_FLTR3_AMNT)	0000h	Page 501
6Ah	R/W	16	GPIO Filter 3 Count (GPIO_FLTR3_CNT)	0000h	Page 502
6Ch	R/W	16	GPIO Event Counter 3 (GPIO_EVNTCNT3)	0000h	Page 503
6Eh	R/W	16	GPIO Event Counter 3 Compare Value (GPIO_EVNTCNT3_COMP)	0000h	Page 504
70h	R/W	16	GPIO Filter 4 Amount (GPIO_FLTR4_AMNT)	0000h	Page 501
72h	R/W	16	GPIO Filter 4 Count (GPIO_FLTR4_CNT)	0000h	Page 502
74h	R/W	16	GPIO Event Counter 4 (GPIO_EVNTCNT4)	0000h	Page 503
76h	R/W	16	GPIO Event Counter 4 Compare Value (GPIO_EVNTCNT4_COMP)	0000h	Page 504
78h	R/W	16	GPIO Filter 5 Amount (GPIO_FLTR5_AMNT)	0000h	Page 501
7Ah	R/W	16	GPIO Filter 5 Count (GPIO_FLTR5_CNT)	0000h	Page 502
7Ch	R/W	16	GPIO Event Counter 5 (GPIO_EVNTCNT5)	0000h	Page 503

Downloaded from Arrow.com.

Table 6-61. GPIO Input Conditioning Function Registers Summary (Continued)

GPIO I/O Offset	Type	Width (Bits)	Register Name	Reset Value	Reference
7Eh	R/W	16	GPIO Event Counter 5 Compare Value (GPIO_EVNTCNT5_COMP)	0000h	Page 504
D0h	R/W	16	GPIO Filter 6 Amount (GPIO_FLTR6_AMNT)	0000h	Page 501
D2h	R/W	16	GPIO Filter 6 Count (GPIO_FLTR6_CNT)	0000h	Page 502
D4h	R/W	16	GPIO Event Counter 6 (GPIO_EVNTCNT6)	0000h	Page 503
D6h	R/W	16	GPIO Event Counter 6 Compare Value (GPIO_EVNTCNT6_COMP)	0000h	Page 504
D8h	R/W	16	GPIO Filter 7 Amount (GPIO_FLTR7_AMNT)	0000h	Page 501
DAh	R/W	16	GPIO Filter 7 Count (GPIO_FLTR7_CNT)	0000h	Page 502
DCh	R/W	16	GPIO Event Counter 7 (GPIO_EVNTCNT7)	0000h	Page 503
DEh	R/W	16	GPIO Event Counter 7 Compare Value (GPIO_EVNTCNT7_COMP)	0000h	Page 504
F0h	R/W	8	GPIO Filter/Event Pair 0 Selection (GPIO_FE0_SEL)	00h	Page 505
F1h	R/W	8	GPIO Filter/Event Pair 1 Selection (GPIO_FE1_SEL)	00h	Page 505
F2h	R/W	8	GPIO Filter/Event Pair 2 Selection (GPIO_FE2_SEL)	00h	Page 505
F3h	R/W	8	GPIO Filter/Event Pair 3 Selection (GPIO_FE3_SEL)	00h	Page 505
F4h	R/W	8	GPIO Filter/Event Pair 4 Selection (GPIO_FE4_SEL)	00h	Page 505
F5h	R/W	8	GPIO Filter/Event Pair 5 Selection (GPIO_FE5_SEL)	00h	Page 505
F6h	R/W	8	GPIO Filter/Event Pair 6 Selection (GPIO_FE6_SEL)	00h	Page 505
F7h	R/W	8	GPIO Filter/Event Pair 7 Selection (GPIO_FE7_SEL)	00h	Page 505
F8h	R/W	32	GPIO Low Bank Event Counter Decrement (GPIOL_EVNTCNT_DEC)	00000000h	Page 507
FCh	R/W	32	GPIO High Bank Event Counter Decrement (GPIOH_EVNTCNT_DEC)	00000000h	Page 508

Table 6-62. GPIO Interrupt and PME Mapper Registers Summary

GPIO Address	Type	Width (Bits)	Register Name	Reset Value	Reference
E0h	R/W	32	GPIO Mapper X (GPIO_MAP_X)	00000000h	Page 512
E4h	R/W	32	GPIO Mapper Y (GPIO_MAP_Y)	00000000h	Page 511
E8h	R/W	32	GPIO Mapper Z (GPIO_MAP_Z)	00000000h	Page 510
ECh	R/W	32	GPIO Mapper W (GPIO_MAP_W)	00000000h	Page 509

Downloaded from Arrow.com.

6.16.1 Atomic Bit Programming Model

The registers in Section 6.16.2 "GPIO Low/High Bank Feature Bit Registers", starting on page 486, that are referred to as “atomic” all follow the same programming model (i.e., work exactly the same way) but each controls a different GPIO feature. Two data bits are used to control each GPIO Feature bit, each pair of bits operate in an exclusive-OR pattern. Refer to Section 5.15.2 "Register Strategy" on page 158 for further details.

The Low Bank registers control programming of GPIO15 through GPIO0 and the High Bank registers program GPIO31 through GPIO16. The tables that follow provide the register/bit formats for the Low and High Bank GPIO feature configuration registers.

All register bits dealing with GPIO31, GPIO30, GPIO29 and GPIO23 are Reserved .

Table 6-63. Low Bank Atomic Register Map

31	30	29	28	27	26	25	24	23	22	21	20	19	18	17	16	15	14	13	12	11	10	9	8	7	6	5	4	3	2	1	0
GPIO15	GPIO14	GPIO13	GPIO12	GPIO11	GPIO10	GPIO9	GPIO8	GPIO7	GPIO6	GPIO5	GPIO4	GPIO3	GPIO2	GPIO1	GPIO0	GPIO15	GPIO14	GPIO13	GPIO12	GPIO11	GPIO10	GPIO9	GPIO8	GPIO7	GPIO6	GPIO5	GPIO4	GPIO3	GPIO2	GPIO1	GPIO0

Table 6-64. Low Bank Atomic Bit Descriptions

Bit	Name	Description
31,15	GPIO15	**GPIO15 Feature.** 00: No change. 01: Feature bit = 1. 10: Feature bit = 0. 11: No change.
30,14	GPIO14	**GPIO14 Feature.** See bits [31,15] for decode.
29,13	GPIO13	**GPIO13 Feature.** See bits [31,15] for decode.
28,12	GPIO12	**GPIO12 Feature.** See bits [31,15] for decode.
27,11	GPIO11	**GPIO11 Feature.** See bits [31,15] for decode.
26,10	GPIO10	**GPIO10 Feature.** See bits [31,15] for decode.
25,9	GPIO9	**GPIO9 Feature.** See bits [31,15] for decode.
24,8	GPIO8	**GPIO8 Feature.** See bits [31,15] for decode.
23,7	GPIO7	**GPIO7 Feature.** See bits [31,15] for decode.
22,6	GPIO6	**GPIO6 Feature.** See bits [31,15] for decode.
21,5	GPIO5	**GPIO5 Feature.** See bits [31,15] for decode.
20,4	GPIO4	**GPIO4 Feature.** See bits [31,15] for decode.
19,3	GPIO3	**GPIO3 Feature.** See bits [31,15] for decode.
18,2	GPIO2	**GPIO2 Feature.** See bits [31,15] for decode.
17,1	GPIO1	**GPIO1 Feature.** See bits [31,15] for decode.
16,0	GPIO0	**GPIO0 Feature.** See bits [31,15] for decode.

Downloaded from Arrow.com.

Table 6-65. High Bank Atomic Register Map Format

31	30	29	28	27	26	25	24	23	22	21	20	19	18	17	16	15	14	13	12	11	10	9	8	7	6	5	4	3	2	1	0
RSVD	RSVD	RSVD	GPIO28	GPIO27	GPIO26	GPIO25	GPIO24	RSVD	GPIO22	GPIO21	GPIO20	GPIO19	GPIO18	GPIO17	GPIO16	RSVD	RSVD	RSVD	GPIO28	GPIO27	GPIO26	GPIO25	GPIO24	RSVD	GPIO22	GPIO21	GPIO20	GPIO19	GPIO18	GPIO17	GPIO16

Table 6-66. High Bank Atomic Bit Descriptions Format

Bit	Name	Description
31,15	RSVD	**Reserved.** Write as 00.
30,14	RSVD	**Reserved.** Write as 00.
29,13	RSVD	**Reserved.** Write as 00.
28,12	GPIO28	**GPIO28 Feature.** 00: No change. 01: Feature bit = 1. 10: Feature bit = 0. 11: No change.
27,11	GPIO27	**GPIO27 Feature.** See bits [28,12] for decode.
26,10	GPIO26	**GPIO26 Feature.** See bits [28,12] for decode.
25,9	GPIO25	**GPIO25 Feature.** See bits [28,12] for decode.
24,8	GPIO24	**GPIO24 Feature.** See bits [28,12] for decode.
23,7	RSVD	**Reserved.** Write as 00.
22,6	GPIO22	**GPIO22 Feature.** See bits [28,12] for decode.
21,5	GPIO21	**GPIO21 Feature.** See bits [28,12] for decode.
20,4	GPIO20	**GPIO20 Feature.** See bits [28,12] for decode.
19,3	GPIO19	**GPIO19 Feature.** See bits [28,12] for decode.
18,2	GPIO18	**GPIO18 Feature.** See bits [28,12] for decode.
17,1	GPIO17	**GPIO17 Feature.** See bits [28,12] for decode.
16,0	GPIO16	**GPIO16 Feature.** See bits [28,12] for decode.

Downloaded from Arrow.com.

6.16.2 GPIO Low/High Bank Feature Bit Registers

6.16.2.1 GPIO Output Value (GPIO[x]_OUT_VAL)

These registers control the output value for the low (GPIO[15:0]) and high (GPIO[31:16]) banks of GPIOs. If the feature bit is high, the output value = 1. If the feature bit is low, the output value = 0. The reset value forces all the output values to be initially set to 0. (These registers use atomic programming, see Section 6.16.1 on page 484 for details.)

If OUT_AUX1 (GPIO I/O Offset 10h/90h) and/or OUT_AUX2 (GPIO I/O Offset 14h/94h) are selected, then their value overrides the OUT_VAL settings. See Table 3-8 "GPIO Options" on page 47 for AUX programming details.

GPIO Low Bank Output Value (GPIOL_OUT_VAL)

GPIO I/O Offset	00h
Type	R/W
Reset Value	FFFF0000h

GPIO High Bank Output Value (GPIOH_OUT_VAL)

GPIO I/O Offset	80h
Type	R/W
Reset Value	FFFF0000h

GPIOL_OUT_VAL Register Map

31	30	29	28	27	26	25	24	23	22	21	20	19	18	17	16	15	14	13	12	11	10	9	8	7	6	5	4	3	2	1	0
OUT_VAL_15	OUT_VAL_14	OUT_VAL_13	OUT_VAL_12	OUT_VAL_11	OUT_VAL_10	OUT_VAL_9	OUT_VAL_8	OUT_VAL_7	OUT_VAL_6	OUT_VAL_5	OUT_VAL_4	OUT_VAL_3	OUT_VAL_2	OUT_VAL_1	OUT_VAL_0	OUT_VAL_15	OUT_VAL_14	OUT_VAL_13	OUT_VAL_12	OUT_VAL_11	OUT_VAL_10	OUT_VAL_9	OUT_VAL_8	OUT_VAL_7	OUT_VAL_6	OUT_VAL_5	OUT_VAL_4	OUT_VAL_3	OUT_VAL_2	OUT_VAL_1	OUT_VAL_0

GPIOH_OUT_VAL Register Map

31	30	29	28	27	26	25	24	23	22	21	20	19	18	17	16	15	14	13	12	11	10	9	8	7	6	5	4	3	2	1	0
RSVD	RSVD	RSVD	OUT_VAL_28	OUT_VAL_27	OUT_VAL_26	OUT_VAL_25	OUT_VAL_24	RSVD	OUT_VAL_22	OUT_VAL_21	OUT_VAL_20	OUT_VAL_19	OUT_VAL_18	OUT_VAL_17	OUT_VAL_16	RSVD	RSVD	RSVD	OUT_VAL_28	OUT_VAL_27	OUT_VAL_26	OUT_VAL_25	OUT_VAL_24	RSVD	OUT_VAL_22	OUT_VAL_21	OUT_VAL_20	OUT_VAL_19	OUT_VAL_18	OUT_VAL_17	OUT_VAL_16

6.16.2.2 GPIO Output Enable (GPIO[x]_OUT_EN)

These registers control the output enable for the low (GPIO[15:0]) and high (GPIO[31:16]) banks of GPIOs. If the feature bit high, the output is enabled. If the feature bit is low, the output is disabled. The reset value forces all the outputs to be disabled. (These registers use atomic programming, see Section 6.16.1 on page 484 for details.)

GPIO Low Bank Output Enable (GPIOL_OUT_EN)

GPIO I/O Offset	04h
Type	R/W
Reset Value	FFFF0000h

GPIO High Bank Output Enable (GPIOH_OUT_EN)

GPIO I/O Offset	84h
Type	R/W
Reset Value	FFFF0000h

GPIOL_OUT_EN Register Map

31	30	29	28	27	26	25	24	23	22	21	20	19	18	17	16	15	14	13	12	11	10	9	8	7	6	5	4	3	2	1	0
OUT_EN_15	OUT_EN_14	OUT_EN_13	OUT_EN_12	OUT_EN_11	OUT_EN_10	OUT_EN_9	OUT_EN_8	OUT_EN_7	OUT_EN_6	OUT_EN_5	OUT_EN_4	OUT_EN_3	OUT_EN_2	OUT_EN_1	OUT_EN_0	OUT_EN_15	OUT_EN_14	OUT_EN_13	OUT_EN_12	OUT_EN_11	OUT_EN_10	OUT_EN_9	OUT_EN_8	OUT_EN_7	OUT_EN_6	OUT_EN_5	OUT_EN_4	OUT_EN_3	OUT_EN_2	OUT_EN_1	OUT_EN_0

GPIOH_OUT_EN Register Map

31	30	29	28	27	26	25	24	23	22	21	20	19	18	17	16	15	14	13	12	11	10	9	8	7	6	5	4	3	2	1	0
RSVD	RSVD	RSVD	OUT_EN_28	OUT_EN_27	OUT_EN_26	OUT_EN_25	OUT_EN_24	RSVD	OUT_EN_22	OUT_EN_21	OUT_EN_20	OUT_EN_19	OUT_EN_18	OUT_EN_17	OUT_EN_16	RSVD	RSVD	RSVD	OUT_EN_28	OUT_EN_27	OUT_EN_26	OUT_EN_25	OUT_EN_24	RSVD	OUT_EN_22	OUT_EN_21	OUT_EN_20	OUT_EN_19	OUT_EN_18	OUT_EN_17	OUT_EN_16

Downloaded from Arrow.com.

6.16.2.3 GPIO Output Open-Drain Enable (GPIO[x]_OUT_OD_EN)

These registers control the open-drain enable of the output for the low (GPIO[15:0]) and high (GPIO[31:16]) banks of GPIOs. The open-drain is enabled if the feature bit is high. The open-drain is disabled if the feature bit is low.The reset value forces all open-drains on the outputs to be disabled. (These registers use atomic programming, see Section 6.16.1 on page 484 for details.)

GPIO Low Bank Output Open-Drain Enable (GPIOL_OUT_OD_EN)

GPIO I/O Offset 08h
Type R/W
Reset Value FFFF0000h

GPIO High Bank Output Open-Drain Enable (GPIOH_OUT_OD_EN)

GPIO I/O Offset 88h
Type R/W
Reset Value FFFF0000h

GPIOL_OUT_OD_EN Register Map

31	30	29	28	27	26	25	24	23	22	21	20	19	18	17	16	15	14	13	12	11	10	9	8	7	6	5	4	3	2	1	0
OUT_OD_15	OUT_OD_14	OUT_OD_13	OUT_OD_12	OUT_OD_11	OUT_OD_10	OUT_OD_9	OUT_OD_8	OUT_OD_7	OUT_OD_6	OUT_OD_5	OUT_OD_4	OUT_OD_3	OUT_OD_2	OUT_OD_1	OUT_OD_0	OUT_OD_15	OUT_OD_14	OUT_OD_13	OUT_OD_12	OUT_OD_11	OUT_OD_10	OUT_OD_9	OUT_OD_8	OUT_OD_7	OUT_OD_6	OUT_OD_5	OUT_OD_4	OUT_OD_3	OUT_OD_2	OUT_OD_1	OUT_OD_0

GPIOH_OUT_OD_EN Register Map

31	30	29	28	27	26	25	24	23	22	21	20	19	18	17	16	15	14	13	12	11	10	9	8	7	6	5	4	3	2	1	0
RSVD	RSVD	RSVD	OUT_OD_28	OUT_OD_27	OUT_OD_26	OUT_OD_25	OUT_OD_24	RSVD	OUT_OD_22	OUT_OD_21	OUT_OD_20	OUT_OD_19	OUT_OD_18	OUT_OD_17	OUT_OD_16	RSVD	RSVD	RSVD	OUT_OD_28	OUT_OD_27	OUT_OD_26	OUT_OD_25	OUT_OD_24	RSVD	OUT_OD_22	OUT_OD_21	OUT_OD_20	OUT_OD_19	OUT_OD_18	OUT_OD_17	OUT_OD_16

6.16.2.4 GPIO Output Invert Enable (GPIO[x]_OUT_INVRT_EN)

These registers control the output invert enable for the low (GPIO[15:0]) and high (GPIO[31:16]) banks of GPIOs. The output is inverted if the feature bit is high. The output is not inverted if the feature bit is low. (These registers use atomic programming, see Section 6.16.1 on page 484 for details.)

GPIO Low Bank Output Invert Enable (GPIOL_OUT_INVRT_EN)

GPIO I/O Offset 0Ch
Type R/W
Reset Value FFFF0000h

GPIO High Bank Output Invert Enable (GPIOH_OUT_INVRT_EN)

GPIO I/O Offset 8Ch
Type R/W
Reset Value FFFF0000h

GPIOL_OUT_INVRT_EN Register Map

31	30	29	28	27	26	25	24	23	22	21	20	19	18	17	16	15	14	13	12	11	10	9	8	7	6	5	4	3	2	1	0
OUT_INVRT_15	OUT_INVRT_14	OUT_INVRT_13	OUT_INVRT_12	OUT_INVRT_11	OUT_INVRT_10	OUT_INVRT_9	OUT_INVRT_8	OUT_INVRT_7	OUT_INVRT_6	OUT_INVRT_5	OUT_INVRT_4	OUT_INVRT_3	OUT_INVRT_2	OUT_INVRT_1	OUT_INVRT_0	OUT_INVRT_15	OUT_INVRT_14	OUT_INVRT_13	OUT_INVRT_12	OUT_INVRT_11	OUT_INVRT_10	OUT_INVRT_9	OUT_INVRT_8	OUT_INVRT_7	OUT_INVRT_6	OUT_INVRT_5	OUT_INVRT_4	OUT_INVRT_3	OUT_INVRT_2	OUT_INVRT_1	OUT_INVRT_0

GPIOH_OUT_INVRT_EN Register Map

31	30	29	28	27	26	25	24	23	22	21	20	19	18	17	16	15	14	13	12	11	10	9	8	7	6	5	4	3	2	1	0
RSVD	RSVD	RSVD	OUT_INVRT_28	OUT_INVRT_27	OUT_INVRT_26	OUT_INVRT_25	OUT_INVRT_24	RSVD	OUT_INVRT_22	OUT_INVRT_21	OUT_INVRT_20	OUT_INVRT_19	OUT_INVRT_18	OUT_INVRT_17	OUT_INVRT_16	RSVD	RSVD	RSVD	OUT_INVRT_28	OUT_INVRT_27	OUT_INVRT_26	OUT_INVRT_25	OUT_INVRT_24	RSVD	OUT_INVRT_22	OUT_INVRT_21	OUT_INVRT_20	OUT_INVRT_19	OUT_INVRT_18	OUT_INVRT_17	OUT_INVRT_16

Downloaded from Arrow.com.

6.16.2.5 GPIO Output Auxiliary 1 Select (GPIO[x]_OUT_AUX1_SEL)

These registers select the Auxiliary 1 output of the low (GPIO[15:0]) and high (GPIO[31:16]) banks of GPIOs. Auxiliary 1 is selected as the output if the feature bit is high. Auxiliary 1 is not selected as the output if the feature bit is low. (These registers use atomic programming, see Section 6.16.1 on page 484 for details.)

If OUT_AUX1 and/or OUT_AUX2 are selected, then their value overrides the OUT_VAL (GPIO I/O Offset 00h/80h) settings. See Table 3-8 "GPIO Options" on page 47 for AUX programming details.

GPIO Low Bank Output Auxiliary 1 Select (GPIOL_OUT_AUX1_SEL)

GPIO I/O Offset	10h
Type	R/W
Reset Value	FFFF0000h

GPIO High Bank Output Auxiliary 1 Select (GPIOH_OUT_AUX1_SEL)

GPIO I/O Offset	90h
Type	R/W
Reset Value	FFFF0000h

GPIOL_OUT_AUX1_SEL Register Map

31	30	29	28	27	26	25	24	23	22	21	20	19	18	17	16	15	14	13	12	11	10	9	8	7	6	5	4	3	2	1	0
OUT_AUX1_15	OUT_AUX1_14	OUT_AUX1_13	OUT_AUX1_12	OUT_AUX1_11	OUT_AUX1_10	OUT_AUX1_9	OUT_AUX1_8	OUT_AUX1_7	OUT_AUX1_6	OUT_AUX1_5	OUT_AUX1_4	OUT_AUX1_3	OUT_AUX1_2	OUT_AUX1_1	OUT_AUX1_0	OUT_AUX1_15	OUT_AUX1_14	OUT_AUX1_13	OUT_AUX1_12	OUT_AUX1_11	OUT_AUX1_10	OUT_AUX1_9	OUT_AUX1_8	OUT_AUX1_7	OUT_AUX1_6	OUT_AUX1_5	OUT_AUX1_4	OUT_AUX1_3	OUT_AUX1_2	OUT_AUX1_1	OUT_AUX1_0

GPIOH_OUT_AUX1_SEL Register Map

31	30	29	28	27	26	25	24	23	22	21	20	19	18	17	16	15	14	13	12	11	10	9	8	7	6	5	4	3	2	1	0
RSVD	RSVD	RSVD	OUT_AUX1_28	OUT_AUX1_27	OUT_AUX1_26	OUT_AUX1_25	OUT_AUX1_24	RSVD	OUT_AUX1_22	OUT_AUX1_21	OUT_AUX1_20	OUT_AUX1_19	OUT_AUX1_18	OUT_AUX1_17	OUT_AUX1_16	RSVD	RSVD	RSVD	OUT_AUX1_28	OUT_AUX1_27	OUT_AUX1_26	OUT_AUX1_25	OUT_AUX1_24	RSVD	OUT_AUX1_22	OUT_AUX1_21	OUT_AUX1_20	OUT_AUX1_19	OUT_AUX1_18	OUT_AUX1_17	OUT_AUX1_16

Downloaded from Arrow.com.

6.16.2.6 GPIO Output Auxiliary 2 Select (GPIO[x]_OUT_AUX2_SEL)

These registers select the Auxiliary 2 output of the low (GPIO[15:0]) and high (GPIO[31:16]) banks of GPIOs. Auxiliary 2 is selected as the output if the feature bit is high. Auxiliary 2 is not selected as the output if the feature bit is low. (These registers use atomic programming, see Section 6.16.1 on page 484 for details.)

If OUT_AUX1 and/or OUT_AUX2 are selected, then their value overrides the OUT_VAL (GPIO I/O Offset 00h/80h) settings. See Table 3-8 "GPIO Options" on page 47 for AUX programming details.

GPIO Low Bank Output Auxiliary 2 Select (GPIOL_OUT_AUX2_SEL)

GPIO I/O Offset 14h
Type R/W
Reset Value FFFF0000h

GPIO High Bank Output Auxiliary 2 Select (GPIOH_OUT_AUX2_SEL)

GPIO I/O Offset 94h
Type R/W
Reset Value FFFF0000h

GPIOL_OUT_AUX2_SEL Register Map

31	30	29	28	27	26	25	24	23	22	21	20	19	18	17	16	15	14	13	12	11	10	9	8	7	6	5	4	3	2	1	0
OUT_AUX2_15	OUT_AUX2_14	OUT_AUX2_13	OUT_AUX2_12	OUT_AUX2_11	OUT_AUX2_10	OUT_AUX2_9	OUT_AUX2_8	OUT_AUX2_7	OUT_AUX2_6	OUT_AUX2_5	OUT_AUX2_4	OUT_AUX2_3	OUT_AUX2_2	OUT_AUX2_1	OUT_AUX2_0	OUT_AUX2_15	OUT_AUX2_14	OUT_AUX2_13	OUT_AUX2_12	OUT_AUX2_11	OUT_AUX2_10	OUT_AUX2_9	OUT_AUX2_8	OUT_AUX2_7	OUT_AUX2_6	OUT_AUX2_5	OUT_AUX2_4	OUT_AUX2_3	OUT_AUX2_2	OUT_AUX2_1	OUT_AUX2_0

GPIOH_OUT_AUX2_SEL Register Map

31	30	29	28	27	26	25	24	23	22	21	20	19	18	17	16	15	14	13	12	11	10	9	8	7	6	5	4	3	2	1	0
RSVD	RSVD	RSVD	OUT_AUX2_28	OUT_AUX2_27	OUT_AUX2_26	OUT_AUX2_25	OUT_AUX2_24	RSVD	OUT_AUX2_22	OUT_AUX2_21	OUT_AUX2_20	OUT_AUX2_19	OUT_AUX2_18	OUT_AUX2_17	OUT_AUX2_16	RSVD	RSVD	RSVD	OUT_AUX2_28	OUT_AUX2_27	OUT_AUX2_26	OUT_AUX2_25	OUT_AUX2_24	RSVD	OUT_AUX2_22	OUT_AUX2_21	OUT_AUX2_20	OUT_AUX2_19	OUT_AUX2_18	OUT_AUX2_17	OUT_AUX2_16

6.16.2.7 GPIO Pull-Up Enable (GPIO[x]_PU_EN)

These registers control enabling of the pull-up on the low (GPIO[15:0]) and high (GPIO[31:16]) banks of GPIOs. If the feature bit is high, the pull-up is enabled. If the feature bit is low, the pull-up is disabled. The reset value forces all the pull-ups to be enabled. (These registers use atomic programming, see Section 6.16.1 on page 484 for details.)

GPIO Low Bank Pull-Up Enable (GPIOL_PU_EN)

GPIO I/O Offset 18h
Type R/W
Reset Value 1000EFFFh

GPIO High Bank Pull-Up Enable (GPIOH_PU_EN)

GPIO I/O Offset 98h
Type R/W
Reset Value 0000FFFFh

GPIOL_PU_EN Register Map

31	30	29	28	27	26	25	24	23	22	21	20	19	18	17	16	15	14	13	12	11	10	9	8	7	6	5	4	3	2	1	0
PU_15	PU_14	PU_13	PU_12	PU_11	PU_10	PU_9	PU_8	PU_7	PU_6	PU_5	PU_4	PU_3	PU_2	PU_1	PU_0	PU_15	PU_14	PU_13	PU_12	PU_11	PU_10	PU_9	PU_8	PU_7	PU_6	PU_5	PU_4	PU_3	PU_2	PU_1	PU_0

GPIOH_PU_EN Register Map

31	30	29	28	27	26	25	24	23	22	21	20	19	18	17	16	15	14	13	12	11	10	9	8	7	6	5	4	3	2	1	0
RSVD	RSVD	RSVD	PU_28	PU_27	PU_26	PU_25	PU_24	RSVD	PU_22	PU_21	PU_20	PU_19	PU_18	PU_17	PU_16	RSVD	RSVD	RSVD	PU_28	PU_27	PU_26	PU_25	PU_24	RSVD	PU_22	PU_21	PU_20	PU_19	PU_18	PU_17	PU_16

Downloaded from Arrow.com.

6.16.2.8 GPIO Pull-Down Enable (GPIO[x]_PD_EN)

These registers control enabling of the pull-down on the low (GPIO[15:0]) and high (GPIO[31:16]) banks of GPIOs. If the feature bit is high, the pull-down is enabled. If the feature bit is low, the pull-down is disabled.The reset value forces all the pull-downs to be disabled. (These registers use atomic programming, see Section 6.16.1 on page 484 for details.)

GPIO Low Bank Pull-Down Enable (GPIOL_PD_EN)

GPIO I/O Offset 1Ch
Type R/W
Reset Value EFFF1000h

GPIO High Bank Pull-Down Enable (GPIOH_PD_EN)

GPIO I/O Offset 9Ch
Type R/W
Reset Value FFFF0000h

GPIOL_PD_EN Register Map

31	30	29	28	27	26	25	24	23	22	21	20	19	18	17	16	15	14	13	12	11	10	9	8	7	6	5	4	3	2	1	0
PD_15	PD_14	PD_13	PD_12	PD_11	PD_10	PD_9	PD_8	PD_7	PD_6	PD_5	PD_4	PD_3	PD_2	PD_1	PD_0	PD_15	PD_14	PD_13	PD_12	PD_11	PD_10	PD_9	PD_8	PD_7	PD_6	PD_5	PD_4	PD_3	PD_2	PD_1	PD_0

GPIOH_PD_EN Register Map

31	30	29	28	27	26	25	24	23	22	21	20	19	18	17	16	15	14	13	12	11	10	9	8	7	6	5	4	3	2	1	0
RSVD	RSVD	RSVD	PD_28	PD_27	PD_26	PD_25	PD_24	RSVD	PD_22	PD_21	PD_20	PD_19	PD_18	PD_17	PD_16	RSVD	RSVD	RSVD	PD_28	PD_27	PD_26	PD_25	PD_24	RSVD	PD_22	PD_21	PD_20	PD_19	PD_18	PD_17	PD_16

6.16.2.9 GPIO Input Enable (GPIO[x]_IN_EN)

These registers control the input enable for the low (GPIO[15:0]) and high (GPIO[31:16]) banks of GPIOs. If the feature bit is high, the input is enabled. If the feature bit is low, the input is disabled.The reset value forces all the inputs to be disabled. (These registers use atomic programming, see Section 6.16.1 on page 484 for details.)

GPIO Low Bank Input Enable (GPIOL_IN_EN)

GPIO I/O Offset 20h
Type R/W
Reset Value FFFF0000h

GPIO High Bank Input Enable (GPIOH_IN_EN)

GPIO I/O Offset A0h
Type R/W
Reset Value EFFF1000h

GPIOL_IN_EN Register Map

31	30	29	28	27	26	25	24	23	22	21	20	19	18	17	16	15	14	13	12	11	10	9	8	7	6	5	4	3	2	1	0
IN_EN_15	IN_EN_14	IN_EN_13	IN_EN_12	IN_EN_11	IN_EN_10	IN_EN_9	IN_EN_8	IN_EN_7	IN_EN_6	IN_EN_5	IN_EN_4	IN_EN_3	IN_EN_2	IN_EN_1	IN_EN_0	IN_EN_15	IN_EN_14	IN_EN_13	IN_EN_12	IN_EN_11	IN_EN_10	IN_EN_9	IN_EN_8	IN_EN_7	IN_EN_6	IN_EN_5	IN_EN_4	IN_EN_3	IN_EN_2	IN_EN_1	IN_EN_0

GPIOH_IN_EN Register Map

31	30	29	28	27	26	25	24	23	22	21	20	19	18	17	16	15	14	13	12	11	10	9	8	7	6	5	4	3	2	1	0
RSVD	RSVD	RSVD	IN_EN_28	IN_EN_27	IN_EN_26	IN_EN_25	IN_EN_24	RSVD	IN_EN_22	IN_EN_21	IN_EN_20	IN_EN_19	IN_EN_18	IN_EN_17	IN_EN_16	RSVD	RSVD	RSVD	IN_EN_28	IN_EN_27	IN_EN_26	IN_EN_25	IN_EN_24	RSVD	IN_EN_22	IN_EN_21	IN_EN_20	IN_EN_19	IN_EN_18	IN_EN_17	IN_EN_16

Downloaded from Arrow.com.

6.16.2.10 GPIO Input Invert Enable (GPIO[x]_IN_INV_EN)

These registers control the input invert enable for the low (GPIO[15:0]) and high (GPIO[31:16]) banks of GPIOs. The input is inverted if the feature bit is high. The input is not inverted if the feature bit is low. (These registers use atomic programming, see Section 6.16.1 on page 484 for details.)

GPIO Low Bank Input Invert Enable (GPIOL_IN_INV_EN)

GPIO I/O Offset 24h
Type R/W
Reset Value FFFF0000h

GPIO High Bank Input Invert Enable (GPIOH_IN_INV_EN)

GPIO I/O Offset A4h
Type R/W
Reset Value FFFF0000h

GPIOL_IN_INV_EN Register Map

31	30	29	28	27	26	25	24	23	22	21	20	19	18	17	16	15	14	13	12	11	10	9	8	7	6	5	4	3	2	1	0
IN_INVRT_15	IN_INVRT_14	IN_INVRT_13	IN_INVRT_12	IN_INVRT_11	IN_INVRT_10	IN_INVRT_9	IN_INVRT_8	IN_INVRT_7	IN_INVRT_6	IN_INVRT_5	IN_INVRT_4	IN_INVRT_3	IN_INVRT_2	IN_INVRT_1	IN_INVRT_0	IN_INVRT_15	IN_INVRT_14	IN_INVRT_13	IN_INVRT_12	IN_INVRT_11	IN_INVRT_10	IN_INVRT_9	IN_INVRT_8	IN_INVRT_7	IN_INVRT_6	IN_INVRT_5	IN_INVRT_4	IN_INVRT_3	IN_INVRT_2	IN_INVRT_1	IN_INVRT_0

GPIOH_IN_INV_EN Register Map

31	30	29	28	27	26	25	24	23	22	21	20	19	18	17	16	15	14	13	12	11	10	9	8	7	6	5	4	3	2	1	0
RSVD	RSVD	RSVD	IN_INVRT_28	IN_INVRT_27	IN_INVRT_26	IN_INVRT_25	IN_INVRT_24	RSVD	IN_INVRT_22	IN_INVRT_21	IN_INVRT_20	IN_INVRT_19	IN_INVRT_18	IN_INVRT_17	IN_INVRT_16	RSVD	RSVD	RSVD	IN_INVRT_28	IN_INVRT_27	IN_INVRT_26	IN_INVRT_25	IN_INVRT_24	RSVD	IN_INVRT_22	IN_INVRT_21	IN_INVRT_20	IN_INVRT_19	IN_INVRT_18	IN_INVRT_17	IN_INVRT_16

6.16.2.11 GPIO Input Filter Enable (GPIO[x]_IN_FLTR_EN)

These registers control the input filter function enable for the low (GPIO[15:0]) and high (GPIO[31:16]) banks of GPIOs. If the feature bit is high, the filter function is enabled. If the feature bit is low, the filter function is disabled.The reset value forces all the filter functions to be disabled. (These registers use atomic programming, see Section 6.16.1 on page 484 for details.)

GPIO Low Bank Input Filter Enable (GPIOL_IN_FLTR_EN)

GPIO I/O Offset 28h
Type R/W
Reset Value FFFF0000h

GPIO High Bank Input Filter Enable (GPIOH_IN_FLTR_EN)

GPIO I/O Offset A8h
Type R/W
Reset Value FFFF0000h

GPIOL_IN_FLTR_EN Register Map

31	30	29	28	27	26	25	24	23	22	21	20	19	18	17	16	15	14	13	12	11	10	9	8	7	6	5	4	3	2	1	0
IN_FLTR_15	IN_FLTR_14	IN_FLTR_13	IN_FLTR_12	IN_FLTR_11	IN_FLTR_10	IN_FLTR_9	IN_FLTR_8	IN_FLTR_7	IN_FLTR_6	IN_FLTR_5	IN_FLTR_4	IN_FLTR_3	IN_FLTR_2	IN_FLTR_1	IN_FLTR_0	IN_FLTR_15	IN_FLTR_14	IN_FLTR_13	IN_FLTR_12	IN_FLTR_11	IN_FLTR_10	IN_FLTR_9	IN_FLTR_8	IN_FLTR_7	IN_FLTR_6	IN_FLTR_5	IN_FLTR_4	IN_FLTR_3	IN_FLTR_2	IN_FLTR_1	IN_FLTR_0

GPIOH_IN_FLTR_EN Register Map

31	30	29	28	27	26	25	24	23	22	21	20	19	18	17	16	15	14	13	12	11	10	9	8	7	6	5	4	3	2	1	0
RSVD	RSVD	RSVD	IN_FLTR_28	IN_FLTR_27	IN_FLTR_26	IN_FLTR_25	IN_FLTR_24	RSVD	IN_FLTR_22	IN_FLTR_21	IN_FLTR_20	IN_FLTR_19	IN_FLTR_18	IN_FLTR_17	IN_FLTR_16	RSVD	RSVD	RSVD	IN_FLTR_28	IN_FLTR_27	IN_FLTR_26	IN_FLTR_25	IN_FLTR_24	RSVD	IN_FLTR_22	IN_FLTR_21	IN_FLTR_20	IN_FLTR_19	IN_FLTR_18	IN_FLTR_17	IN_FLTR_16

Downloaded from Arrow.com.

6.16.2.12 GPIO Input Event Count Enable (GPIO[x]_IN_EVNTCNT_EN)

These registers control the enabling of the input event counter function for the low (GPIO[15:0]) and high (GPIO[31:16]) banks of GPIOs. If the feature bit is high, the event counter function is enabled on the input. If the feature bit is low, the event counter function is disabled on the input. The reset value forces all the filter functions to be disabled. (These registers use atomic programming, see Section 6.16.1 on page 484 for details.)

When the event counter is enabled, the filter must also be enabled (GPIO I/O Offset 28h/A8h). If no filtering is desired, then program the GPIO_FILTER[x]_AMOUNT register to 0.

GPIO Low Bank Input Event Count Enable (GPIOL_IN_EVNTCNT_EN)

GPIO I/O Offset 2Ch
Type R/W
Reset Value FFFF0000h

GPIO High Bank Input Event Count Enable (GPIOH_IN_EVNTCNT_EN)

GPIO I/O Offset ACh
Type R/W
Reset Value FFFF0000h

GPIOL_IN_EVNTCNT_EN Register Map

31	30	29	28	27	26	25	24	23	22	21	20	19	18	17	16	15	14	13	12	11	10	9	8	7	6	5	4	3	2	1	0
IN_EVNTCNT_15	IN_EVNTCNT_14	IN_EVNTCNT_13	IN_EVNTCNT_12	IN_EVNTCNT_11	IN_EVNTCNT_10	IN_EVNTCNT_9	IN_EVNTCNT_8	IN_EVNTCNT_7	IN_EVNTCNT_6	IN_EVNTCNT_5	IN_EVNTCNT_4	IN_EVNTCNT_3	IN_EVNTCNT_2	IN_EVNTCNT_1	IN_EVNTCNT_0	IN_EVNTCNT_15	IN_EVNTCNT_14	IN_EVNTCNT_13	IN_EVNTCNT_12	IN_EVNTCNT_11	IN_EVNTCNT_10	IN_EVNTCNT_9	IN_EVNTCNT_8	IN_EVNTCNT_7	IN_EVNTCNT_6	IN_EVNTCNT_5	IN_EVNTCNT_4	IN_EVNTCNT_3	IN_EVNTCNT_2	IN_EVNTCNT_1	IN_EVNTCNT_0

GPIOH_IN_EVNTCNT_EN Register Map

31	30	29	28	27	26	25	24	23	22	21	20	19	18	17	16	15	14	13	12	11	10	9	8	7	6	5	4	3	2	1	0
RSVD	RSVD	RSVD	IN_EVNTCNT_28	IN_EVNTCNT_27	IN_EVNTCNT_26	IN_EVNTCNT_25	IN_EVNTCNT_24	RSVD	IN_EVNTCNT_22	IN_EVNTCNT_21	IN_EVNTCNT_20	IN_EVNTCNT_19	IN_EVNTCNT_18	IN_EVNTCNT_17	IN_EVNTCNT_16	RSVD	RSVD	RSVD	IN_EVNTCNT_28	IN_EVNTCNT_27	IN_EVNTCNT_26	IN_EVNTCNT_25	IN_EVNTCNT_24	RSVD	IN_EVNTCNT_22	IN_EVNTCNT_21	IN_EVNTCNT_20	IN_EVNTCNT_19	IN_EVNTCNT_18	IN_EVNTCNT_17	IN_EVNTCNT_16

Downloaded from Arrow.com.

6.16.2.13 GPIO Input Auxiliary 1 Select (GPIO[x]_IN_AUX1_SEL)

Each GPIO has a dedicated internal destination for the conditioned input from the component ball; these inputs are activated when Auxiliary 1 Input is selected. Table 3-8 "GPIO Options" on page 47 shows all the dedicated destinations. These registers select the Auxiliary 1 Input of the low (GPIO[15:0]) and high (GPIO[31:16]) banks of GPIOs. Auxiliary 1 Input is selected as the input if the feature bit is high. Auxiliary 1 is not selected as the input if the feature bit is low. (These registers use atomic programming, see Section 6.16.1 on page 484 for details.)

GPIO Low Bank Input Auxiliary 1 Select (GPIOL_IN_AUX1_SEL)

GPIO I/O Offset 34h
Type R/W
Reset Value FFFF0000h

GPIO High Bank Input Auxiliary 1 Select (GPIOH_IN_AUX1_SEL)

GPIO I/O Offset B4h
Type R/W
Reset Value EFFF1000h

GPIOL_IN_AUX1_SEL Register Map

31	30	29	28	27	26	25	24	23	22	21	20	19	18	17	16	15	14	13	12	11	10	9	8	7	6	5	4	3	2	1	0
IN_AUX1_15	IN_AUX1_14	IN_AUX1_13	IN_AUX1_12	IN_AUX1_11	IN_AUX1_10	IN_AUX1_9	IN_AUX1_8	IN_AUX1_7	IN_AUX1_6	IN_AUX1_5	IN_AUX1_4	IN_AUX1_3	IN_AUX1_2	IN_AUX1_1	IN_AUX1_0	IN_AUX1_15	IN_AUX1_14	IN_AUX1_13	IN_AUX1_12	IN_AUX1_11	IN_AUX1_10	IN_AUX1_9	IN_AUX1_8	IN_AUX1_7	IN_AUX1_6	IN_AUX1_5	IN_AUX1_4	IN_AUX1_3	IN_AUX1_2	IN_AUX1_1	IN_AUX1_0

GPIOH_IN_AUX1_SEL Register Map

31	30	29	28	27	26	25	24	23	22	21	20	19	18	17	16	15	14	13	12	11	10	9	8	7	6	5	4	3	2	1	0
RSVD	RSVD	RSVD	IN_AUX1_28	IN_AUX1_27	IN_AUX1_26	IN_AUX1_25	IN_AUX1_24	RSVD	IN_AUX1_22	IN_AUX1_21	IN_AUX1_20	IN_AUX1_19	IN_AUX1_18	IN_AUX1_17	IN_AUX1_16	RSVD	RSVD	RSVD	IN_AUX1_28	IN_AUX1_27	IN_AUX1_26	IN_AUX1_25	IN_AUX1_24	RSVD	IN_AUX1_22	IN_AUX1_21	IN_AUX1_20	IN_AUX1_19	IN_AUX1_18	IN_AUX1_17	IN_AUX1_16

6.16.2.14 GPIO Event Enable (GPIO[x]_EVNT_EN)

These registers control the Event Enable for INT (Interrupt) and PME (Power Management Event) mapping of the low (GPIO[15:0]) and high (GPIO[31:16]) banks of GPIOs. The GPIO is enabled for mapping if the feature bit is high. The GPIO is disabled from mapping if the feature bit is low. Actual mapping is performed by the GPIO X, Y, Z, and W mapping registers, detailed on page 512 through page 509; the Event Enable registers simply enable/disable the associated GPIO for mapping. (These registers use atomic programming, see Section 6.16.1 on page 484 for details.)

GPIO Low Bank Events Enable (GPIOL_EVNT_EN)

GPIO I/O Offset 38h
Type R/W
Reset Value FFFF0000h

GPIO High Bank Events Enable (GPIOH_EVNT_EN)

GPIO I/O Offset B8h
Type R/W
Reset Value FFFF0000h

GPIOL_EVNT_EN Register Map

31	30	29	28	27	26	25	24	23	22	21	20	19	18	17	16	15	14	13	12	11	10	9	8	7	6	5	4	3	2	1	0
EVNT_15	EVNT_14	EVNT_13	EVNT_12	EVNT_11	EVNT_10	EVNT_9	EVNT_8	EVNT_7	EVNT_6	EVNT_5	EVNT_4	EVNT_3	EVNT_2	EVNT_1	EVNT_0	EVNT_15	EVNT_14	EVNT_13	EVNT_12	EVNT_11	EVNT_10	EVNT_9	EVNT_8	EVNT_7	EVNT_6	EVNT_5	EVNT_4	EVNT_3	EVNT_2	EVNT_1	EVNT_0

GPIOH_EVNT_EN Register Map

31	30	29	28	27	26	25	24	23	22	21	20	19	18	17	16	15	14	13	12	11	10	9	8	7	6	5	4	3	2	1	0
RSVD	RSVD	RSVD	EVNT_28	EVNT_27	EVNT_26	EVNT_25	EVNT_24	RSVD	EVNT_22	EVNT_21	EVNT_20	EVNT_19	EVNT_18	EVNT_17	EVNT_16	RSVD	RSVD	RSVD	EVNT_28	EVNT_27	EVNT_26	EVNT_25	EVNT_24	RSVD	EVNT_22	EVNT_21	EVNT_20	EVNT_19	EVNT_18	EVNT_17	EVNT_16

Downloaded from Arrow.com.

6.16.2.15 GPIO Input Positive Edge Enable (GPIO[x]_IN_POSEDGE_EN)

These registers control the enabling of the positive edge detector function for the low (GPIO[15:0]) and high (GPIO[31:16]) banks of GPIOs. The positive edge detector function is enabled if the feature bit is high. The positive edge detector function is disabled if the feature bit is low. (These registers use atomic programming, see Section 6.16.1 on page 484 for details.)

GPIO Low Bank Input Positive Edge Enable (GPIOL_IN_POSEDGE_EN)

GPIO I/O Offset 40h
Type R/W
Reset Value FFFF0000h

GPIO High Bank Input Positive Edge Enable (GPIOH_IN_POSEDGE_EN)

GPIO I/O Offset C0h
Type R/W
Reset Value FFFF0000h

GPIOL_IN_POSEDGE_EN Register Map

31	30	29	28	27	26	25	24	23	22	21	20	19	18	17	16	15	14	13	12	11	10	9	8	7	6	5	4	3	2	1	0
IN_POS_15	IN_POS_14	IN_POS_13	IN_POS_12	IN_POS_11	IN_POS_10	IN_POS_9	IN_POS_8	IN_POS_7	IN_POS_6	IN_POS_5	IN_POS_4	IN_POS_3	IN_POS_2	IN_POS_1	IN_POS_0	IN_POS_15	IN_POS_14	IN_POS_13	IN_POS_12	IN_POS_11	IN_POS_10	IN_POS_9	IN_POS_8	IN_POS_7	IN_POS_6	IN_POS_5	IN_POS_4	IN_POS_3	IN_POS_2	IN_POS_1	IN_POS_0

GPIOH_IN_POSEDGE_EN Register Map

31	30	29	28	27	26	25	24	23	22	21	20	19	18	17	16	15	14	13	12	11	10	9	8	7	6	5	4	3	2	1	0
RSVD	RSVD	RSVD	IN_POS_28	IN_POS_27	IN_POS_26	IN_POS_25	IN_POS_24	RSVD	IN_POS_22	IN_POS_21	IN_POS_20	IN_POS_19	IN_POS_18	IN_POS_17	IN_POS_16	RSVD	RSVD	RSVD	IN_POS_28	IN_POS_27	IN_POS_26	IN_POS_25	IN_POS_24	RSVD	IN_POS_22	IN_POS_21	IN_POS_20	IN_POS_19	IN_POS_18	IN_POS_17	IN_POS_16

6.16.2.16 GPIO Input Negative Edge Enable (GPIO[x]_IN_NEGEDGE_EN)

These registers control the enabling of the negative edge detector function in the inputs for the low (GPIO[15:0]) and high (GPIO[31:16]) banks of GPIOs. The negative edge detector function is enabled if the feature bit is high. The negative edge detector function is disabled if the feature bit is low. (These registers use atomic programming, see Section 6.16.1 on page 484 for details.)

GPIO Low Bank Input Negative Edge Enable (GPIOL_IN_NEGEDGE_EN)

GPIO I/O Offset 44h
Type R/W
Reset Value FFFF0000h

GPIO High Bank Input Negative Edge Enable (GPIOH_IN_NEGEDGE_EN)

GPIO I/O Offset C4h
Type R/W
Reset Value FFFF0000h

GPIOL_IN_NEGEDGE_EN Register Map

31	30	29	28	27	26	25	24	23	22	21	20	19	18	17	16	15	14	13	12	11	10	9	8	7	6	5	4	3	2	1	0
IN_NEG_15	IN_NEG_14	IN_NEG_13	IN_NEG_12	IN_NEG_11	IN_NEG_10	IN_NEG_9	IN_NEG_8	IN_NEG_7	IN_NEG_6	IN_NEG_5	IN_NEG_4	IN_NEG_3	IN_NEG_2	IN_NEG_1	IN_NEG_0	IN_NEG_15	IN_NEG_14	IN_NEG_13	IN_NEG_12	IN_NEG_11	IN_NEG_10	IN_NEG_9	IN_NEG_8	IN_NEG_7	IN_NEG_6	IN_NEG_5	IN_NEG_4	IN_NEG_3	IN_NEG_2	IN_NEG_1	IN_NEG_0

GPIOH_IN_NEGEDGE_EN Register Map

31	30	29	28	27	26	25	24	23	22	21	20	19	18	17	16	15	14	13	12	11	10	9	8	7	6	5	4	3	2	1	0
RSVD	RSVD	RSVD	IN_NEG_28	IN_NEG_27	IN_NEG_26	IN_NEG_25	IN_NEG_24	RSVD	IN_NEG_22	IN_NEG_21	IN_NEG_20	IN_NEG_19	IN_NEG_18	IN_NEG_17	IN_NEG_16	RSVD	RSVD	RSVD	IN_NEG_28	IN_NEG_27	IN_NEG_26	IN_NEG_25	IN_NEG_24	RSVD	IN_NEG_22	IN_NEG_21	IN_NEG_20	IN_NEG_19	IN_NEG_18	IN_NEG_17	IN_NEG_16

Downloaded from Arrow.com.

6.16.2.17 GPIO Input Positive Edge Status (GPIO[x]_IN_POSEDGE_STS)

These registers report the status of the positive edge detection function for the low (GPIO[15:0]) and high (GPIO[31:16]) banks of GPIOs. Writing a 1 clears the detected edge and reading returns the current status. (These registers use atomic programming, see Section 6.16.1 on page 484 for details.)

GPIO Low Bank Input Positive Edge Status (GPIOL_IN_POSEDGE_STS)

GPIO I/O Offset 48h
Type R/W
Reset Value FFFF0000h

GPIO High Bank Input Positive Edge Status (GPIOH_IN_POSEDGE_STS)

GPIO I/O Offset C8h
Type R/W
Reset Value FFFF0000h

GPIOL_IN_POSEDGE_STS Register Map

31	30	29	28	27	26	25	24	23	22	21	20	19	18	17	16	15	14	13	12	11	10	9	8	7	6	5	4	3	2	1	0
IN_POS_STS_15	IN_POS_STS_14	IN_POS_STS_13	IN_POS_STS_12	IN_POS_STS_11	IN_POS_STS_10	IN_POS_STS_9	IN_POS_STS_8	IN_POS_STS_7	IN_POS_STS_6	IN_POS_STS_5	IN_POS_STS_4	IN_POS_STS_3	IN_POS_STS_2	IN_POS_STS_1	IN_POS_STS_0	IN_POS_STS_15	IN_POS_STS_14	IN_POS_STS_13	IN_POS_STS_12	IN_POS_STS_11	IN_POS_STS_10	IN_POS_STS_9	IN_POS_STS_8	IN_POS_STS_7	IN_POS_STS_6	IN_POS_STS_5	IN_POS_STS_4	IN_POS_STS_3	IN_POS_STS_2	IN_POS_STS_1	IN_POS_STS_0

GPIOH_IN_POSEDGE_STS Register Map

31	30	29	28	27	26	25	24	23	22	21	20	19	18	17	16	15	14	13	12	11	10	9	8	7	6	5	4	3	2	1	0
RSVD	RSVD	RSVD	IN_POS_STS_28	IN_POS_STS_27	IN_POS_STS_26	IN_POS_STS_25	IN_POS_STS_24	RSVD	IN_POS_STS_22	IN_POS_STS_21	IN_POS_STS_20	IN_POS_STS_19	IN_POS_STS_18	IN_POS_STS_17	IN_POS_STS_16	RSVD	RSVD	RSVD	IN_POS_STS_28	IN_POS_STS_27	IN_POS_STS_26	IN_POS_STS_25	IN_POS_STS_24	RSVD	IN_POS_STS_22	IN_POS_STS_21	IN_POS_STS_20	IN_POS_STS_19	IN_POS_STS_18	IN_POS_STS_17	IN_POS_STS_16

Downloaded from Arrow.com.

6.16.2.18 GPIO Input Negative Edge Status (GPIO[x]_IN_NEGEDGE_STS)

These registers report the status of the negative edge detection function for the low (GPIO[15:0]) and high (GPIO[31:16]) banks of GPIOs. Writing a 1 clears the detected edge and reading returns the current status. (These registers use atomic programming, see Section 6.16.1 on page 484 for details.)

GPIO Low Bank Input Negative Edge Status (GPIOL_IN_NEGEDGE_STS)

GPIO I/O Offset 4Ch
Type R/W
Reset Value FFFF0000h

GPIO High Bank Input Negative Edge Status (GPIOH_IN_NEGEDGE_STS)

GPIO I/O Offset CCh
Type R/W
Reset Value FFFF0000h

GPIOL_IN_NEGEDGE_STS Register Map

31	30	29	28	27	26	25	24	23	22	21	20	19	18	17	16	15	14	13	12	11	10	9	8	7	6	5	4	3	2	1	0
IN_NEG_STS_15	IN_NEG_STS_14	IN_NEG_STS_13	IN_NEG_STS_12	IN_NEG_STS_11	IN_NEG_STS_10	IN_NEG_STS_9	IN_NEG_STS_8	IN_NEG_STS_7	IN_NEG_STS_6	IN_NEG_STS_5	IN_NEG_STS_4	IN_NEG_STS_3	IN_NEG_STS_2	IN_NEG_STS_1	IN_NEG_STS_0	IN_NEG_STS_15	IN_NEG_STS_14	IN_NEG_STS_13	IN_NEG_STS_12	IN_NEG_STS_11	IN_NEG_STS_10	IN_NEG_STS_9	IN_NEG_STS_8	IN_NEG_STS_7	IN_NEG_STS_6	IN_NEG_STS_5	IN_NEG_STS_4	IN_NEG_STS_3	IN_NEG_STS_2	IN_NEG_STS_1	IN_NEG_STS_0

GPIOH_IN_NEGEDGE_STS Register Map

31	30	29	28	27	26	25	24	23	22	21	20	19	18	17	16	15	14	13	12	11	10	9	8	7	6	5	4	3	2	1	0
RSVD	RSVD	RSVD	IN_NEG_STS_28	IN_NEG_STS_27	IN_NEG_STS_26	IN_NEG_STS_25	IN_NEG_STS_24	RSVD	IN_NEG_STS_22	IN_NEG_STS_21	IN_NEG_STS_20	IN_NEG_STS_19	IN_NEG_STS_18	IN_NEG_STS_17	IN_NEG_STS_16	RSVD	RSVD	RSVD	IN_NEG_STS_28	IN_NEG_STS_27	IN_NEG_STS_26	IN_NEG_STS_25	IN_NEG_STS_24	RSVD	IN_NEG_STS_22	IN_NEG_STS_21	IN_NEG_STS_20	IN_NEG_STS_19	IN_NEG_STS_18	IN_NEG_STS_17	IN_NEG_STS_16

Downloaded from Arrow.com.

6.16.2.19 GPIO Read Back (GPIO[x]_READ_BACK)

The Read Back registers provide the current values of the states of each GPIO as sent to the ball. The GPIO[x]_READ_BACK registers are not based on the atomic programming model since these are not control registers.

GPIO Low Bank Read Back (GPIOL_READ_BACK)

GPIO I/O Offset 30h
Type RO
Reset Value 00000000h

GPIOL_READ_BACK Register Map

31	30	29	28	27	26	25	24	23	22	21	20	19	18	17	16	15	14	13	12	11	10	9	8	7	6	5	4	3	2	1	0
RSVD																RB_15	RB_14	RB_13	RB_12	RB_11	RB_10	RB_9	RB_8	RB_7	RB_6	RB_5	RB_4	RB_3	RB_2	RB_1	RB_0

GPIOL_READ_BACK Bit Descriptions

Bit	Name	Description
31:16	RSVD	**Reserved.** Reads back 0.
15	RB_15	**GPIO15 Read Back Value.** Provides status (1/0) of the associated GPIO ball.
14	RB_14	**GPIO14 Read Back Value.** Provides status (1/0) of the associated GPIO ball.
13	RB_13	**GPIO13 Read Back Value.** Provides status (1/0) of the associated GPIO ball.
12	RB_12	**GPIO12 Read Back Value.** Provides status (1/0) of the associated GPIO ball.
11	RB_11	**GPIO11 Read Back Value.** Provides status (1/0) of the associated GPIO ball.
10	RB_10	**GPIO10 Read Back Value.** Provides status (1/0) of the associated GPIO ball.
9	RB_9	**GPIO9 Read Back Value.** Provides status (1/0) of the associated GPIO ball.
8	RB_8	**GPIO8 Read Back Value.** Provides status (1/0) of the associated GPIO ball.
7	RB_7	**GPIO7 Read Back Value.** Provides status (1/0) of the associated GPIO ball.
6	RB_6	**GPIO6 Read Back Value.** Provides status (1/0) of the associated GPIO ball.
5	RB_5	**GPIO5 Read Back Value.** Provides status (1/0) of the associated GPIO ball.
4	RB_4	**GPIO4 Read Back Value.** Provides status (1/0) of the associated GPIO ball.
3	RB_3	**GPIO3 Read Back Value.** Provides status (1/0) of the associated GPIO ball.
2	RB_2	**GPIO2 Read Back Value.** Provides status (1/0) of the associated GPIO ball.
1	RB_1	**GPIO1 Read Back Value.** Provides status (1/0) of the associated GPIO ball.
0	RB_0	**GPIO0 Read Back Value.** Provides status (1/0) of the associated GPIO ball.

Downloaded from Arrow.com.

GPIO High Bank Read Back (GPIOH_READ_BACK)

GPIO I/O Offset B0h
Type RO
Reset Value 00000000h

GPIOH_READ_BACK Register Map

31	30	29	28	27	26	25	24	23	22	21	20	19	18	17	16	15	14	13	12	11	10	9	8	7	6	5	4	3	2	1	0
RSVD																			RB_28	RB_27	RB_26	RB_25	RB_24	RSVD	RB_22	RB_21	RB_20	RB_19	RB_18	RB_17	RB_16

GPIOH_READ_BACK Bit Descriptions

Bit	Name	Description
31:13	RSVD	**Reserved.** Reads back 0.
12	RB_28	**GPIO28 Read Back Value.** Provides status (1/0) of the associated GPIO ball.
11	RB_27	**GPIO27 Read Back Value.** Provides status (1/0) of the associated GPIO ball.
10	RB_26	**GPIO26 Read Back Value.** Provides status (1/0) of the associated GPIO ball.
9	RB_25	**GPIO25 Read Back Value.** Provides status (1/0) of the associated GPIO ball.
8	RB_24	**GPIO24 Read Back Value.** Provides status (1/0) of the associated GPIO ball.
7	RSVD	**Reserved.** Reads back 0.
6	RB_22	**GPIO22 Read Back Value.** Provides status (1/0) of the associated GPIO ball.
5	RB_21	**GPIO21 Read Back Value.** Provides status (1/0) of the associated GPIO ball.
4	RB_20	**GPIO20 Read Back Value.** Provides status (1/0) of the associated GPIO ball.
3	RB_19	**GPIO19 Read Back Value.** Provides status (1/0) of the associated GPIO ball.
2	RB_18	**GPIO18 Read Back Value.** Provides status (1/0) of the associated GPIO ball.
1	RB_17	**GPIO17 Read Back Value.** Provides status (1/0) of the associated GPIO ball.
0	RB_16	**GPIO16 Read Back Value.** Provides status (1/0) of the associated GPIO ball.

6.16.2.20 GPIO Lock Enable (GPIO[x]_LOCK_EN

These registers lock the values of feature bit registers except the GPIO[x]_READ_BACK, GPIO[x]_IN_POSEDGE_STS, and GPIO[x]_IN_NEGEDGE_STS registers. When set, the indicated feature bits may not be changed. The GPIO[x]_LOCK_EN registers are not based on the atomic programming model (i.e., only one bit for control as opposed to two bits).

GPIO Low Bank Lock Enable (GPIOL_LOCK_EN)

GPIO I/O Offset 3Ch
Type R/W
Reset Value 00000000h

GPIOL_LOCK_EN Register Map

31	30	29	28	27	26	25	24	23	22	21	20	19	18	17	16	15	14	13	12	11	10	9	8	7	6	5	4	3	2	1	0
RSVD																LKNE	LKPE	LKIP	LKIA	LKEE	LKFE	LKII	LKIE	LKPD	LKPU	LKA2	LKA1	LKOI	LKOD	LKOE	LKOV

Downloaded from Arrow.com.

GPIOL_LOCK_ENABLE Bit Descriptions

Bit	Name	Description
31:16	RSVD	**Reserved.** Write to 0.
15	LKNE	**Lock GPIOL_IN_NEGEDGE_EN.** When set, writing to the GPIO Low Bank Input Negative Edge Enable register (GPIO I/O Offset 44h) is prevented.
14	LKPE	**Lock GPIOL_IN_POSEDGE_EN.** When set, writing to the GPIO Low Bank Input Positive Edge Enable register (GPIO I/O Offset 40h) is prevented.
13	LKIP	**Lock GPIOL_EVENTS_EN.** When set, writing to the GPIO Low Bank Events Enable (interrupts &PMEs) register (GPIO I/O Offset 38h) is prevented.
12	LKIA	**Lock GPIOL_IN_AUX1_SEL.** When set, writing to the GPIO Low Bank Input Auxiliary 1 Select register (GPIO I/O Offset 34h) is prevented.
11	LKEE	**Lock GPIOL_IN_EVNTCNT_EN.** When set, writing to the GPIO Low Bank Input Event Count Enable register (GPIO I/O Offset 2Ch) is prevented.
10	LKFE	**Lock GPIOL_IN_FLTR_EN.** When set, writing to the GPIO Low Bank Input Filter Enable register (GPIO I/O Offset 28h) is prevented.
9	LKII	**Lock GPIOL_IN_INVRT_EN.** When set, writing to the GPIO Low Bank Input Invert Enable register (GPIO I/O Offset 24h) is prevented.
8	LKIE	**Lock GPIOL_IN_EN.** When set, writing to the GPIO Low Bank Input Enable register (GPIO I/O Offset 20h) is prevented.
7	LKPD	**Lock GPIOL_PU_EN.** When set, writing to the GPIO Low Bank Pull-Down Enable register (GPIO I/O Offset 1Ch) is prevented.
6	LKPU	**Lock GPIOL_PU_EN.** When set, writing to the GPIO Low Bank Pull-Up Enable register (GPIO I/O Offset 18h) is prevented.
5	LKA2	**Lock GPIOL_OUT_AUX2_SEL.** When set, writing to the GPIO Low Bank Output Auxiliary 2 Select register (GPIO I/O Offset 14h) is prevented.
4	LKA1	**Lock GPIOL_OUT_AUX1_SEL.** When set, writing to the GPIO Low Bank Output Auxiliary 1 Select register (GPIO I/O Offset 10h) is prevented.
3	LKOI	**Lock GPIOL_OUT_INVRT_EN.** When set, writing to the GPIO Low Bank Output Invert Enable register (GPIO I/O Offset 0Ch) is prevented.
2	LKOD	**Lock GPIOL_OUT_OD_EN.** When set, writing to the GPIO Low Bank Output Open-Drain Enable register (GPIO I/O Offset 08h) is prevented.
1	LKOE	**Lock GPIOL_OUT_EN.** When set, writing to the GPIO Low Bank Enable register (GPIO I/O Offset 04h) is prevented.
0	LKOV	**Lock GPIOL_OUT_VAL.** When set, writing to the GPIO Low Bank Output Value register (GPIO I/O Offset 00h) is prevented.

Downloaded from Arrow.com.

GPIO High Bank Lock Enable (GPIOH_LOCK_EN)

GPIO I/O Offset BCh
Type R/W
Reset Value 00000000h

GPIOH_LOCK_EN Register Map

31	30	29	28	27	26	25	24	23	22	21	20	19	18	17	16	15	14	13	12	11	10	9	8	7	6	5	4	3	2	1	0
RSVD																LKNE	LKPE	LKIP	LKIA	LKEE	LKFE	LKII	LKIE	LKPD	LKPU	LKA2	LKA1	LKOI	LKOD	LKOE	LKOV

GPIOH_LOCK_EN Bit Descriptions

Bit	Name	Description
31:16	RSVD	**Reserved.** Write to 0.
15	LKNE	**Lock GPIOH_IN_NEGEDGE_ENA.** When set, writing to the GPIO Low Bank Input Negative Edge Enable register (GPIO I/O Offset C4h) is prevented.
14	LKPE	**Lock GPIOH_IN_POSEDGE_EN.** When set, writing to the GPIO Low Bank Input Positive Edge Enable register (GPIO I/O Offset C0h) is prevented.
13	LKIP	**Lock GPIOH_EVENTS_EN.** When set, writing to the GPIO Low Bank Events Enable (interrupts &PMEs) register (GPIO I/O Offset B8h) is prevented.
12	LKIA	**Lock GPIOH_IN_AUX1_SEL.** When set, writing to the GPIO Low Bank Input Auxiliary 1 Select register (GPIO I/O Offset B4h) is prevented.
11	LKEE	**Lock GPIOH_IN_EVNTCNT_EN.** When set, writing to the GPIO Low Bank Input Event Count Enable register (GPIO I/O Offset ACh) is prevented.
10	LKFE	**Lock GPIOH_IN_FLTR_EN.** When set, writing to the GPIO Low Bank Input Filter Enable register (GPIO I/O Offset A8h) is prevented.
9	LKII	**Lock GPIOH_IN_INVRT_EN.** When set, writing to the GPIO Low Bank Input Invert Enable register (GPIO I/O Offset A4h) is prevented.
8	LKIE	**Lock GPIOH_IN_EN.** When set, writing to the GPIO Low Bank Input Enable register (GPIO I/O Offset A0h) is prevented.
7	LKPD	**Lock GPIOH_PD_EN.** When set, writing to the GPIO Low Bank Pull-Down Enable register (GPIO I/O Offset 9Ch) is prevented.
6	LKPU	**Lock GPIOH_PU_EN.** When set, writing to the GPIO Low Bank Pull-Up Enable register (GPIO I/O Offset 98h) is prevented.
5	LKA2	**Lock GPIOH_OUT_AUX2_SEL.** When set, writing to the GPIO Low Bank Output Auxiliary 2 Select register (GPIO I/O Offset 94h) is prevented.
4	LKA1	**Lock GPIOH_OUT_AUX1_SEL.** When set, writing to the GPIO Low Bank Output Auxiliary 1 Select register (GPIO I/O Offset 90h) is prevented.
3	LKOI	**Lock GPIOH_OUT_INVRT_EN.** When set, writing to the GPIO Low Bank Output Invert Enable register (GPIO I/O Offset 8Ch) is prevented.
2	LKOD	**Lock GPIOH_OUT_OD_EN.** When set, writing to the GPIO Low Bank Output Open-Drain Enable register (GPIO I/O Offset 88h) is prevented.
1	LKOE	**Lock GPIOH_OUTPUT_ENABLE.** When set, writing to the GPIO Low Bank Enable register (GPIO I/O Offset 84h) is prevented.
0	LKOV	**Lock GPIOH_OUTPUT_VALUE.** When set, writing to the GPIO Low Bank Output Value register (GPIO I/O Offset 80h) is prevented.

Downloaded from Arrow.com.

6.16.3 GPIO Input Conditioning Function Registers

The AMD Geode™ CS5536 companion device has eight digital filter/event counter pairs (numbered 0 through 7) that can be shared with 28 GPIOs. There are two 16-bit registers associated with digital filter (FILTER_AMOUNT and FILTER_COUNTER) and two 16-bit registers associated with event counter (EVENTCOUNT and EVENT_COMP). The Input Conditioning Function registers are not based on the atomic programming model.

6.16.3.1 GPIO Filter Amount (GPIO_FLTR[x]_AMNT)

GPIO_FILTER[x]_AMOUNT are 16-bit registers and programmed with a 16-bit filter count value.

GPIO Filter 0 Amount (GPIO_FLTR0_AMNT)
GPIO I/O Offset 50h
Type R/W
Reset Value 0000h

GPIO Filter 1 Amount (GPIO_FLTR1_AMNT)
GPIO I/O Offset 58h
Type R/W
Reset Value 0000h

GPIO Filter 2 Amount (GPIO_FLTR2_AMNT)
GPIO I/O Offset 60h
Type R/W
Reset Value 0000h

GPIO Filter 3 Amount (GPIO_FLTR3_AMNT)
GPIO I/O Offset 68h
Type R/W
Reset Value 0000h

GPIO Filter 4 Amount (GPIO_FLTR4_AMNT)
GPIO I/O Offset 70h
Type R/W
Reset Value 0000h

GPIO Filter 5 Amount (GPIO_FLTR5_AMNT)
GPIO I/O Offset 78h
Type R/W
Reset Value 0000h

GPIO Filter 6 Amount (GPIO_FLTR6_AMNT)
GPIO I/O Offset D0h
Type R/W
Reset Value 0000h

GPIO Filter 7 Amount (GPIO_FLTR7_AMNT)
GPIO I/O Offset D8h
Type R/W
Reset Value 0000h

GPIO_FLTR[x]_AMNT Register Map

15	14	13	12	11	10	9	8	7	6	5	4	3	2	1	0
FILTER_AMOUNT															

GPIO_FLTR[x]_AMNT Bit Descriptions

Bit	Name	Description
15:0	FILTER_AMOUNT	**Filter Amount.** The associated GPIO input must remain stable for a FILTER_AMOUNT number of 32 KHz clock edges in order for the output to change. A FILTER_AMOUNT of 0 effectively disables the filtering function because the counter will not roll over from 0 to all 1s. The maximum FILTER_AMOUNT is FFFFh. Note that by enabling the filter functionality, a low pulse with the width of the FILTER_AMOUNT value can be generated if the GPIO input is high. If the filter is used for GPIO28 shared with PWR_BUT#, be aware that the PWR_BUT# logic contains a secondary debounce logic that filters out all pulses less than 15 ms. To avoid power up problems, program this register to a value smaller than 15 ms if used for GPIO28.

Downloaded from Arrow.com.

6.16.3.2 GPIO Filter Count (GPIO_FILTER[x]_COUNT)

Writing to these 16-bit registers programs the counter value. Reads provide current counter value.

GPIO Filter 0 Count (GPIO_FLTR0_CNT)
GPIO I/O Offset 52h
Type R/W
Reset Value 0000h

GPIO Filter 1 Count (GPIO_FLTR1_CNT)
GPIO I/O Offset 5Ah
Type R/W
Reset Value 0000h

GPIO Filter 2 Count (GPIO_FLTR2_CNT)
GPIO I/O Offset 62h
Type R/W
Reset Value 0000h

GPIO Filter 3 Count (GPIO_FLTR3_CNT)
GPIO I/O Offset 6Ah
Type R/W
Reset Value 0000h

GPIO Filter 4 Count (GPIO_FLTR4_CNT)
GPIO I/O Offset 72h
Type R/W
Reset Value 0000h

GPIO Filter 5 Count (GPIO_FLTR5_CNT)
GPIO I/O Offset 7Ah
Type R/W
Reset Value 0000h

GPIO Filter 6 Count (GPIO_FLTR6_CNT)
GPIO I/O Offset D2h
Type R/W
Reset Value 0000h

GPIO Filter 7 Count (GPIO_FLTR7_CNT)
GPIO I/O Offset DAh
Type R/W
Reset Value 0000h

GPIO_FLTR[x]_CNT Register Map

15	14	13	12	11	10	9	8	7	6	5	4	3	2	1	0
FILTER_COUNT															

GPIO_FLTR[x]_CNT Bit Descriptions

Bit	Name	Description
15:0	FILTER_COUNT	**Filter Count.** An initial count is loaded into the FILTER_COUNT via the FILTER_AMOUNT register. Direct access to the counter's state is provided via the FILTER_COUNT register and may be read at any time to determine the current value of the counter. The FILTER_COUNT register may also be written to at any time, thereby jamming the counter state forward or backward from the current count.

Downloaded from Arrow.com.

6.16.3.3 GPIO Event Counter (GPIO_EVNTCNT[x])

Writing to these 16-bit registers programs the counter value. Reads provide current counter value.

GPIO Event Counter 0 (GPIO_EVNTCNT0)
GPIO I/O Offset 54h
Type R/W
Reset Value 0000h

GPIO Event Counter 1 (GPIO_EVNTCNT1)
GPIO I/O Offset 5Ch
Type R/W
Reset Value 0000h

GPIO Event Counter 2 (GPIO_EVNTCNT2)
GPIO I/O Offset 64h
Type R/W
Reset Value 0000h

GPIO Event Counter 3 (GPIO_EVNTCNT3)
GPIO I/O Offset 6Ch
Type R/W
Reset Value 0000h

GPIO Event Counter 4 (GPIO_EVNTCNT4)
GPIO I/O Offset 74h
Type R/W
Reset Value 0000h

GPIO Event Counter 5 (GPIO_EVNTCNT5)
GPIO I/O Offset 7Ch
Type R/W
Reset Value 0000h

GPIO Event Counter 6 (GPIO_EVNTCNT6)
GPIO I/O Offset D4h
Type R/W
Reset Value 0000h

GPIO Event Counter 7 (GPIO_EVNTCNT7)
GPIO I/O Offset DCh
Type R/W
Reset Value 0000h

GPIO_EVNTCNT[x] Register Map

15	14	13	12	11	10	9	8	7	6	5	4	3	2	1	0
EVENT_COUNT															

GPIO_EVNTCNT_[x] Bit Descriptions

Bit	Name	Description
15:0	EVENT_COUNT	**Event Counter Status.** Direct access to the counter's state is provided via this register and may be read at any time to determine the current value of the counter. This register may also be written to at any time, thereby jamming the counter state forward or backward from the current count. Hardware provisions exist to ensure accurate readings even if a counter edge is in process.

Downloaded from Arrow.com.

6.16.3.4 GPIO Event Counter Compare Value (GPIO_EVNTCNT[x]_COMP)

These 16-bit registers are programmed with event count compare value.

GPIO Event Counter 0 Compare Value (GPIO_EVNTCNT0_COMP)
GPIO I/O Offset 56h
Type R/W
Reset Value 0000h

GPIO Event Counter 1 Compare Value (GPIO_EVNTCNT1_COMP)
GPIO I/O Offset 5Eh
Type R/W
Reset Value 0000h

GPIO Event Counter 2 Compare Value (GPIO_EVNTCNT2_COMP)
GPIO I/O Offset 66h
Type R/W
Reset Value 0000h

GPIO Event Counter 3 Compare Value (GPIO_EVNTCNT3_COMP)
GPIO I/O Offset 6Eh
Type R/W
Reset Value 0000h

GPIO Event Counter 4 Compare Value (GPIO_EVNTCNT4_COMP)
GPIO I/O Offset 76h
Type R/W
Reset Value 0000h

GPIO Event Counter 5 Compare Value (GPIO_EVNTCNT5_COMP)
GPIO I/O Offset 7Eh
Type R/W
Reset Value 0000h

GPIO Event Counter 6 Compare Value (GPIO_EVNTCNT6_COMP)
GPIO I/O Offset D6h
Type R/W
Reset Value 0000h

GPIO Event Counter 7 Compare Value (GPIO_EVNTCNT7_COMP)
GPIO I/O Offset DEh
Type R/W
Reset Value 0000h

GPIO_EVNTCNT[x]_COMP Register Map

15	14	13	12	11	10	9	8	7	6	5	4	3	2	1	0
EVNTCNT_COMP															

GPIO_EVENTCOUNT_[x] Bit Descriptions

Bit	Name	Description
15:0	EVNTCNT_COMP	**Event Counter Compare Value.** This register is used to set the event counter's compare value. The compare value, when exceeded by the event counter, causes the counter to produce a constant (level) output.

Downloaded from Arrow.com.

6.16.3.5 GPIO Filter/Event Pair Selection (GPIO_FE[x]_SEL)

These registers assign any GPIO to one of the eight filter/event pairs; part of the input conditioning functions.

GPIO Filter/Event Pair 0 Selection (GPIO_FE0_SEL)
GPIO I/O Offset F0h
Type R/W
Reset Value 00h

GPIO Filter/Event Pair 1 Selection (GPIO_FE1_SEL)
GPIO I/O Offset F1h
Type R/W
Reset Value 00h

GPIO Filter/Event Pair 2 Selection (GPIO_FE2_SEL)
GPIO I/O Offset F2h
Type R/W
Reset Value 00h

GPIO Filter/Event Pair 3 Selection (GPIO_FE3_SEL)
GPIO I/O Offset F3h
Type R/W
Reset Value 00h

GPIO Filter/Event Pair 4 Selection (GPIO_FE4_SEL)
GPIO I/O Offset F4h
Type R/W
Reset Value 00h

GPIO Filter/Event Pair 5 Selection (GPIO_FE5_SEL)
GPIO I/O Offset F5h
Type R/W
Reset Value 00h

GPIO Filter/Event Pair 6 Selection (GPIO_FE6_SEL)
GPIO I/O Offset F6h
Type R/W
Reset Value 00h

GPIO Filter/Event Pair 7 Selection (GPIO_FE7_SEL)
GPIO I/O Offset F7h
Type R/W
Reset Value 00h

GPIO_FE[x]_SEL Register Map

7	6	5	4	3	2	1	0
RSVD			FE_SEL				

GPIO_FE[x]_SEL Bit Descriptions

Bit	Name	Description
7:5	RSVD	**Reserved.**

Downloaded from Arrow.com.

GPIO_FE[x]_SEL Bit Descriptions (Continued)

Bit	Name	Description
4:0	FE_SEL	**Filter/Event Pair Select.** Selects one of 32 GPIO inputs, Filter Enables, Event Enables, and Event Counter Decrements for Filter Event Pair [x]. 00000: GPIO0 is connected to Filter Event Pair [x]. 00001: GPIO1 is connected to Filter Event Pair [x]. 00010: GPIO2 is connected to Filter Event Pair [x]. 00011: GPIO3 is connected to Filter Event Pair [x]. 00100: GPIO4 is connected to Filter Event Pair [x]. 00101: GPIO5 is connected to Filter Event Pair [x]. 00110: GPIO6 is connected to Filter Event Pair [x]. 00111: GPIO7 is connected to Filter Event Pair [x]. 01000: GPIO8 is connected to Filter Event Pair [x]. 01001: GPIO9 is connected to Filter Event Pair [x]. 01010: GPIO10 is connected to Filter Event Pair [x]. 01011: GPIO11 is connected to Filter Event Pair [x]. 01100: GPIO12 is connected to Filter Event Pair [x]. 01101: GPIO13 is connected to Filter Event Pair [x]. 01110: GPIO14 is connected to Filter Event Pair [x]. 01111: GPIO15 is connected to Filter Event Pair [x]. 10000: GPIO16 is connected to Filter Event Pair [x]. 10001: GPIO17 is connected to Filter Event Pair [x]. 10010: GPIO18 is connected to Filter Event Pair [x]. 10011: GPIO19 is connected to Filter Event Pair [x]. 10100: GPIO20 is connected to Filter Event Pair [x]. 10101: GPIO21 is connected to Filter Event Pair [x]. 10110: GPIO22 is connected to Filter Event Pair [x]. 10111: Reserved. 11000: GPIO24 is connected to Filter Event Pair [x]. 11001: GPIO25 is connected to Filter Event Pair [x]. 11010: GPIO26 is connected to Filter Event Pair [x]. 11011: GPIO27 is connected to Filter Event Pair [x]. 11100: GPIO28 is connected to Filter Event Pair [x]. 11101: Reserved. 11110: Reserved. 11111: Reserved.

Downloaded from Arrow.com.

6.16.3.6 GPIO Event Counter Decrement (GPIO[x]_EVNTCNT_DEC)

There are two 32-bit Event Counter Decrement registers one for the lower bank (GPIO[15:0]) and one for the higher bank (GPIO[31:16]) of GPIOs.These registers generate one 33 ns wide pulse when written to it, so multiple successive writes may be performed without waiting for the previous write to ‘complete; in addition, reading these registers always provides 0s.

GPIO Low Bank Event Counter Decrement (GPIOL_EVNTCNT_DEC)

GPIO I/O Offset F8h
Type R/W
Reset Value 00000000h

GPIOL_EVNTCNT_DEC Register Map

31	30	29	28	27	26	25	24	23	22	21	20	19	18	17	16	15	14	13	12	11	10	9	8	7	6	5	4	3	2	1	0
RSVD																ECD_15	ECD_14	ECD_13	ECD_12	ECD_11	ECD_10	ECD_9	ECD_8	ECD_7	ECD_6	ECD_5	ECD_4	ECD_3	ECD_2	ECD_1	ECD_0

GPIOL_EVNTCNT_DEC Bit Descriptions

Bit	Name	Description
31:16	RSVD	**Reserved.** Write/read as 0.
15	ECD15	**GPIO15 Event Counter Decrement.** Writing this bit high generates a decrement pulse to the event counter that has been associated with this GPIO. There is no need to write the bit low again. This bit will always read as low. Event counters are associated with specific GPIOs via the GPIO_FE[x]_SEL register set.
14	ECD14	**GPIO14 Event Counter Decrement.** Same as EDC15 (bit 15)
13	ECD13	**GPIO13 Event Counter Decrement.** Same as EDC15 (bit 15)
12	ECD12	**GPIO12 Event Counter Decrement.** Same as EDC15 (bit 15).
11	ECD11	**GPIO11 Event Counter Decrement.** Same as EDC15 (bit 15).
10	ECD10	**GPIO10 Event Counter Decrement.** Same as EDC15 (bit 15).
9	ECD9	**GPIO9 Event Counter Decrement.** Same as EDC15 (bit 15).
8	ECD8	**GPIO8 Event Counter Decrement.** Same as EDC15 (bit 15).
7	ECD7	**GPIO7 Event Counter Decrement.** Same as EDC15 (bit 15).
6	ECD6	**GPIO6 Event Counter Decrement.** Same as EDC15 (bit 15).
5	ECD5	**GPIO5 Event Counter Decrement.** Same as EDC15 (bit 15).
4	ECD4	**GPIO4 Event Counter Decrement.** Same as EDC15 (bit 15).
3	ECD3	**GPIO3 Event Counter Decrement.** Same as EDC15 (bit 15).
2	ECD2	**GPIO2 Event Counter Decrement.** Same as EDC15 (bit 15).
1	ECD1	**GPIO1 Event Counter Decrement.** Same as EDC15 (bit 15).
0	ECD0	**GPIO0 Event Counter Decrement.** Same as EDC15 (bit 15).

Downloaded from Arrow.com.

GPIO High Bank Event Counter Decrement (GPIOH_EVNTCNT_DEC)

GPIO I/O Offset FCh
Type R/W
Reset Value 00000000h

GPIOH_EVNTCNT_DEC Register Map

31	30	29	28	27	26	25	24	23	22	21	20	19	18	17	16	15	14	13	12	11	10	9	8	7	6	5	4	3	2	1	0
RSVD																			ECD_28	ECD_27	ECD_26	ECD_25	ECD_24	RSVD	ECD_22	ECD_21	ECD_20	ECD_19	ECD_18	ECD_17	ECD_16

GPIOH_EVNTCNT_DEC Bit Descriptions

Bit	Name	Description
31:13	RSVD	**Reserved.** Write/read as 0.
12	ECD28	**GPIO28 Event Counter Decrement.** Writing this bit high generates a decrement pulse to the event counter that has been associated with this GPIO. There is no need to write the bit low again. This bit will always read as low. Event counters are associated with specific GPIOs via the GPIO_FE[x]_SEL register set.
11	ECD27	**GPIO27 Event Counter Decrement.** Same as EDC28 (bit 12).
10	ECD26	**GPIO26 Event Counter Decrement.** Same as EDC28 (bit 12).
9	ECD25	**GPIO25 Event Counter Decrement.** Same as EDC28 (bit 12).
8	ECD24	**GPIO24 Event Counter Decrement.** Same as EDC28 (bit 12).
7	RSVD	**Reserved.** Write/read as 0.
6	ECD22	**GPIO22 Event Counter Decrement.** Same as EDC28 (bit 12).
5	ECD21	**GPIO21 Event Counter Decrement.** Same as EDC28 (bit 12).
4	ECD20	**GPIO20 Event Counter Decrement.** Same as EDC28 (bit 12).
3	ECD19	**GPIO19 Event Counter Decrement.** Same as EDC28 (bit 12).
2	ECD18	**GPIO18 Event Counter Decrement.** Same as EDC28 (bit 12).
1	ECD17	**GPIO17 Event Counter Decrement.** Same as EDC28 (bit 12).
0	ECD16	**GPIO16 Event Counter Decrement.** Same as EDC28 (bit 12).

Downloaded from Arrow.com.

6.16.4 GPIO Interrupt and PME Registers

There are four 32-bit registers in the mapper used for GPIO INT (Interrupt) and PME (Power Management Event) mapping. These registers connect any GPIO to one of eight PIC interrupts or to one of eight PME inputs.

1) GPIO_MAP_W: Maps 8 final inputs ([31:24] of 32 final inputs).
2) GPIO_MAP_Z: Maps 8 final inputs ([23:16] of 32 final inputs).
3) GPIO_MAP_Y: Maps 8 final inputs ([15:8] of 32 final inputs).
4) GPIO_MAP_X: Maps 8 final inputs ([7:0] of 32 final inputs).

The MAP registers setup the routing of the final inputs to either GPIO_INT[7:0] or GPIO_PME[7:0]. The four registers contain 32 4-bit fields, that is a nibble for each final input. Each nibble contains the following control bits:

- PME_SEL: Located in MSB of the nibble and directs the final input to INT when low. If high, the final input is directed to PME outputs.
- MAP_SEL: These bits determine which bit in the output field the final input is directed to (i.e., either (GPIO_INT[7:0]) or GPIO_PME[7:0]).

6.16.4.1 GPIO Mapper W (GPIO_MAP_W)

GPIO I/O Offset ECh
Type R/W
Reset Value 00000000h

GPIO_MAP_W Register Map

31	30	29	28	27	26	25	24	23	22	21	20	19	18	17	16	15	14	13	12	11	10	9	8	7	6	5	4	3	2	1	0
RSVD												PME_SEL_28	MAP_SEL_28			PME_SEL_27	MAP_SEL_27			PME_SEL_26	MAP_SEL_26			PME_SEL_25	MAP_SEL_25			PME_SEL_24	MAP_SEL_24		

GPIO_MAP_W Bit Descriptions

Bit	Name	Description
31:20	RSVD	**Reserved.** Write as 0.
19	PME_SEL_28	**GPIO28 PME Select.** Selects where to map GPIO28. 0: INT (Interrupt). 1: PME (Power Management Event).
18:16	MAP_SEL_28	**GPIO28 Map Select.** Selects which bit of in the output field (i.e., INT or PME) GPIO28 should be mapped to. 000: Bit 0 010: Bit 2 100: Bit 4 110: Bit 6 001: Bit 1 011: Bit 3 101: Bit 5 111: Bit 7
15	PME_SEL_27	**GPIO27 PME Select.** Selects where to map GPIO27. See bit 19 for decode.
14:12	MAP_SEL_27	**GPIO27 Map Select.** Selects which bit of in the output field (i.e., INT or PME) GPIO27 should be mapped to. See bits [18:16] for decode.
11	PME_SEL_26	**GPIO26 PME Select.** Selects where to map GPIO26. See bit 19 for decode.
10:8	MAP_SEL_26	**GPIO26 Map Select.** Selects which bit of in the output field (i.e., INT or PME) GPIO26 should be mapped to. See bits [18:16] for decode.
7	PME_SEL_25	**GPIO25 PME Select.** Selects where to map GPIO25. See bit 19 for decode.
6:4	MAP_SEL_25	**GPIO25 Map Select.** Selects which bit of in the output field (i.e., INT or PME) GPIO25 should be mapped to. See bits [18:16] for decode.
3	PME_SEL_24	**GPIO24 PME Select.** Selects where to map GPIO24. See bit 19 for decode.
2:0	MAP_SEL_24	**GPIO24 Map Select.** Selects which bit of in the output field (i.e., INT or PME) GPIO24 should be mapped to. See bits [18:16] for decode.

Downloaded from Arrow.com.

6.16.4.2 GPIO Mapper Z (GPIO_MAP_Z)

GPIO I/O Offset E8h
Type R/W
Reset Value 00000000h

GPIO_MAP_Z Register Map

31	30	29	28	27	26	25	24	23	22	21	20	19	18	17	16	15	14	13	12	11	10	9	8	7	6	5	4	3	2	1	0
RSVD				PME_SEL_22	MAP_SEL_22			PME_SEL_21	MAP_SEL_21			PME_SEL_20	MAP_SEL_20			PME_SEL_19	MAP_SEL_19			PME_SEL_18	MAP_SEL_18			PME_SEL_17	MAP_SEL_17			PME_SEL_16	MAP_SEL_16		

GPIO_MAP_Z Bit Descriptions

Bit	Name	Description
31:28	RSVD	**Reserved.** Write as 0.
27	PME_SEL_22	**GPIO22 PME Select.** Selects where to map GPIO22. 0: INT (Interrupt). 1: PME (Power Management Event).
26:24	MAP_SEL_22	**GPIO22 Map Select.** Selects which bit of in the output field (i.e., INT or PME) GPIO22 should be mapped to. 000: Bit 0 010: Bit 2 100: Bit 4 110: Bit 6 001: Bit 1 011: Bit 3 101: Bit 5 111: Bit 7
23	PME_SEL_21	**GPIO21 PME Select.** Selects where to map GPIO21. See bit 27 for decode.
22:20	MAP_SEL_21	**GPIO21 Map Select.** Selects which bit of in the output field (i.e., INT or PME) GPIO21 should be mapped to. See bits [26:24] for decode.
19	PME_SEL_20	**GPIO20 PME Select.** Selects where to map GPIO20. See bit 27 for decode.
18:16	MAP_SEL_20	**GPIO20 Map Select.** Selects which bit of in the output field (i.e., INT or PME) GPIO20 should be mapped to. See bits [26:24] for decode.
15	PME_SEL_19	**GPIO19 PME Select.** Selects where to map GPIO19. See bit 27 for decode.
14:12	MAP_SEL_19	**GPIO19 Map Select.** Selects which bit of in the output field (i.e., INT or PME) GPIO19 should be mapped to. See bits [26:24] for decode.
11	PME_SEL_18	**GPIO18 PME Select.** Selects where to map GPIO18. See bit 27 for decode.
10:8	MAP_SEL_18	**GPIO18 Map Select.** Selects which bit of in the output field (i.e., INT or PME) GPIO18 should be mapped to. See bits [26:24] for decode.
7	PME_SEL_17	**GPIO17 PME Select.** Selects where to map GPIO17. See bit 27 for decode.
6:4	MAP_SEL_17	**GPIO17 Map Select.** Selects which bit of in the output field (i.e., INT or PME) GPIO17 should be mapped to. See bits [26:24] for decode.
3	PME_SEL_16	**GPIO16 PME Select.** Selects where to map GPIO16. See bit 27 for decode.
2:0	MAP_SEL_16	**GPIO16 Map Select.** Selects which bit of in the output field (i.e., INT or PME) GPIO16 should be mapped to. See bits [26:24] for decode.

Downloaded from Arrow.com.

6.16.4.3 GPIO Mapper Y (GPIO_MAP_Y)

GPIO I/O Offset E4h
Type R/W
Reset Value 00000000h

GPIO_MAP_Y Register Map

31	30	29	28	27	26	25	24	23	22	21	20	19	18	17	16	15	14	13	12	11	10	9	8	7	6	5	4	3	2	1	0
PME_SEL_15	MAP_SEL_15			PME_SEL_14	MAP_SEL_14			PME_SEL_5	MAP_SEL_13			PME_SEL_12	MAP_SEL_12			PME_SEL_11	MAP_SEL_11			PME_SEL_10	MAP_SEL_10			PME_SEL_9	MAP_SEL_9			PME_SEL_8	MAP_SEL_8		

GPIO_MAP_Y Bit Descriptions

Bit	Name	Description
31	PME_SEL_15	**GPIO15 PME Select.** Selects where to map GPIO15. 0: INT (Interrupt). 1: PME (Power Management Event).
30:28	MAP_SEL_15	**GPIO15 Map Select.** Selects which bit of in the output field (i.e., INT or PME) GPIO15 should be mapped to. 000: Bit 0 010: Bit 2 100: Bit 4 110: Bit 6 001: Bit 1 011: Bit 3 101: Bit 5 111: Bit 7
27	PME_SEL_14	**GPIO14 PME Select.** Selects where to map GPIO14. See bit 31 for decode.
26:24	MAP_SEL_14	**GPIO14 Map Select.** Selects which bit of in the output field (i.e., INT or PME) GPIO14 should be mapped to. See bits [30:28] for decode.
23	PME_SEL_13	**GPIO13 PME Select.** Selects where to map GPIO13. See bit 31 for decode.
22:20	MAP_SEL_13	**GPIO13 Map Select.** Selects which bit of in the output field (i.e., INT or PME) GPIO13 should be mapped to. See bits [30:28] for decode.
19	PME_SEL_12	**GPIO12 PME Select.** Selects where to map GPIO12. See bit 31 for decode.
18:16	MAP_SEL_12	**GPIO12 Map Select.** Selects which bit of in the output field (i.e., INT or PME) GPIO12 should be mapped to. See bits [30:28] for decode.
15	PME_SEL_11	**GPIO11 PME Select.** Selects where to map GPIO11. See bit 31 for decode.
14:12	MAP_SEL_11	**GPIO11 Map Select.** Selects which bit of in the output field (i.e., INT or PME) GPIO11 should be mapped to. See bits [30:28] for decode.
11	PME_SEL_10	**GPIO10 PME Select.** Selects where to map GPIO10. See bit 31 for decode.
10:8	MAP_SEL_10	**GPIO10 Map Select.** Selects which bit of in the output field (i.e., INT or PME) GPIO10 should be mapped to. See bits [30:28] for decode.
7	PME_SEL_9	**GPIO9 PME Select.** Selects where to map GPIO9. See bit 31 for decode.
6:4	MAP_SEL_9	**GPIO9 Map Select.** Selects which bit of in the output field (i.e., INT or PME) GPIO9 should be mapped to. See bits [30:28] for decode.
3	PME_SEL_8	**GPIO8 PME Select.** Selects where to map GPIO8. See bit 31 for decode.
2:0	MAP_SEL_8	**GPIO8 Map Select.** Selects which bit of in the output field (i.e., INT or PME) GPIO8 should be mapped to. See bits [30:28] for decode.

Downloaded from Arrow.com.

6.16.4.4 GPIO Mapper X (GPIO_MAP_X)

GPIO I/O Offset E0h
Type R/W
Reset Value 00000000h

GPIO_MAP_X Register Map

31	30	29	28	27	26	25	24	23	22	21	20	19	18	17	16	15	14	13	12	11	10	9	8	7	6	5	4	3	2	1	0
PME_SEL_7	MAP_SEL_7			PME_SEL_6	MAP_SEL_6			PME_SEL_5	MAP_SEL_5			PME_SEL_4	MAP_SEL_4			PME_SEL_3	MAP_SEL_3			PME_SEL_2	MAP_SEL_2			PME_SEL_1	MAP_SEL_1			PME_SEL_0	MAP_SEL_0		

GPIO_MAP_X Bit Descriptions

Bit	Name	Description
31	PME_SEL_7	**GPIO7 PME Select.** Selects where to map GPIO7. 0: INT (Interrupt). 1: PME (Power Management Event).
30:28	MAP_SEL_7	**GPIO7 Map Select.** Selects which bit of in the output field (i.e., INT or PME) GPIO7 should be mapped to. 000: Bit 0 010: Bit 2 100: Bit 4 110: Bit 6 001: Bit 1 011: Bit 3 101: Bit 5 111: Bit 7
27	PME_SEL_6	**GPIO6 PME Select.** Selects where to map GPIO6. See bit 31 for decode.
26:24	MAP_SEL_6	**GPIO6 Map Select.** Selects which bit of in the output field (i.e., INT or PME) GPIO6 should be mapped to. See bits [30:28] for decode.
23	PME_SEL_5	**GPIO5 PME Select.** Selects where to map GPIO5. See bit 31 for decode.
22:20	MAP_SEL_5	**GPIO5 Map Select.** Selects which bit of in the output field (i.e., INT or PME) GPIO5 should be mapped to. See bits [30:28] for decode.
19	PME_SEL_4	**GPIO4 PME Select.** Selects where to map GPIO4. See bit 31 for decode.
18:16	MAP_SEL_4	**GPIO4 Map Select.** Selects which bit of in the output field (i.e., INT or PME) GPIO4 should be mapped to. See bits [30:28] for decode.
15	PME_SEL_3	**GPIO3 PME Select.** Selects where to map GPIO3. See bit 31 for decode.
14:12	MAP_SEL_3	**GPIO2 Map Select.** Selects which bit of in the output field (i.e., INT or PME) GPIO3 should be mapped to. See bits [30:28] for decode.
11	PME_SEL_2	**GPIO2 PME Select.** Selects where to map GPIO2. See bit 31 for decode.
10:8	MAP_SEL_2	**GPIO2 Map Select.** Selects which bit of in the output field (i.e., INT or PME) GPIO2 should be mapped to. See bits [30:28] for decode.
7	PME_SEL_1	**GPIO1 PME Select.** Selects where to map GPIO1. See bit 31 for decode.
6:4	MAP_SEL_1	**GPIO1 Map Select.** Selects which bit of in the output field (i.e., INT or PME) GPIO1 should be mapped to. See bits [30:28] for decode.
3	PME_SEL_0	**GPIO0 PME Select.** Selects where to map GPIO0. See bit 31 for decode.
2:0	MAP_SEL_0	**GPIO0 Map Select.** Selects which bit of in the output field (i.e., INT or PME) GPIO0 should be mapped to. See bits [30:28] for decode.

Downloaded from Arrow.com.

6.17 Multi-Function General Purpose Timer Register Descriptions

The registers for the Multi-Function General Purpose Timer (MFGPT) are divided into three sets:

- Standard GeodeLink™ Device MSRs (Shared with DIVIL, see Section 6.6.1 on page 348.)
- MFGPT Specific MSRs
- MFGPT Native Registers.

The MSRs are accessed via the RDMSR and WRMSR processor instructions. The MSR address is derived from the perspective of the CPU Core. See Section 4.2 "MSR Addressing" on page 60 for more details on MSR addressing.

All MSRs are 64 bits, however, the MFGPT Specific MSRs (summarized in Table 6-67) are called out as 32 bits. The MFGPT device treats writes to the upper 32 bits (i.e., bits [63:32]) of the 64-bit MSRs as don't cares and always returns 0 on these bits.

The Native registers associated with the MFGPT (summarized in Table 6-68) are accessed via a Base Address Register, MSR_LBAR_MFGPT (MSR 5140000Dh), as I/O Offsets. (See Section 6.6.2.5 on page 359 for bit descriptions of the Base Address Register.)

Table 6-67. MFGPT Specific MSRs Summary

MSR Address	Type	Register Name	Reset Value	Reference
51400028h	R/W	MFGPT IRQ Mask (MFGPT_IRQ)	00000000h	Page 514
51400029h	R/W	MFGPT NMI and Reset Mask (MFGPT_NR)	00000000h	Page 517
5140002Ah	R/W	MFGPT Reserved (MFGPT_RSVD)	00000000h	Page 518
5140002Bh	WO	MFGPT Clear Setup Test (MFGPT_SETUP)	00000000h	Page 518

Table 6-68. MFGPT Native Registers Summary

MFGPT I/O Offset	Type	Register Name	Reset Value	Reference
00h	R/W	MFGPT0 Comparator 1 (MFGPT0_CMP1)	0000h	Page 519
02h	R/W	MFGPT0 Comparator 2 (MFGPT0_CMP2)	0000h	Page 520
04h	R/W	MFGPT0 Up Counter (MFGPT0_CNT)	0000h	Page 521
06h	R/W	MFGPT0 Setup (MFGPT0_SETUP)	0000h	Page 522
08h	R/W	MFGPT1 Comparator 1 (MFGPT1_CMP1)	0000h	Page 519
0Ah	R/W	MFGPT1 Comparator 2 (MFGPT1_CMP2)	0000h	Page 520
0Ch	R/W	MFGPT1 Up Counter (MFGPT1_CNT)	0000h	Page 521
0Eh	R/W	MFGPT1 Setup (MFGPT1_SETUP)	0000h	Page 522
10h	R/W	MFGPT2 Comparator 1 (MFGPT2_CMP1)	0000h	Page 519
12h	R/W	MFGPT2 Comparator 2 (MFGPT2_CMP2)	0000h	Page 520
14h	R/W	MFGPT2 Up Counter (MFGPT2_CNT)	0000h	Page 521
16h	R/W	MFGPT2 Setup (MFGPT2_SETUP)	0000h	Page 522
18h	R/W	MFGPT3 Comparator 1 (MFGPT3_CMP1)	0000h	Page 519
1Ah	R/W	MFGPT3 Comparator 2 (MFGPT3_CMP2)	0000h	Page 520
1Ch	R/W	MFGPT3 Up Counter (MFGPT3_CNT)	0000h	Page 521
1Eh	R/W	MFGPT3 Setup (MFGPT3_SETUP)	0000h	Page 522
20h	R/W	MFGPT4 Comparator 1 (MFGPT4_CMP1)	0000h	Page 519
22h	R/W	MFGPT4 Comparator 2 (MFGPT4_CMP2)	0000h	Page 520
24h	R/W	MFGPT4 Up Counter (MFGPT4_CNT)	0000h	Page 521
26h	R/W	MFGPT4 Setup (MFGPT4_SETUP)	0000h	Page 522

Downloaded from Arrow.com.

Table 6-68. MFGPT Native Registers Summary (Continued)

MFGPT I/O Offset	Type	Register Name	Reset Value	Reference
28h	R/W	MFGPT5 Comparator 1 (MFGPT5_CMP1)	0000h	Page 519
2Ah	R/W	MFGPT5 Comparator 2 (MFGPT5_CMP2)	0000h	Page 520
2Ch	R/W	MFGPT5 Up Counter (MFGPT5_CNT)	0000h	Page 521
2Eh	R/W	MFGPT5 Setup (MFGPT5_SETUP)	0000h	Page 522
30h	R/W	MFGPT6 Comparator 1 (MFGPT6_CMP1)	0000h	Page 519
32h	R/W	MFGPT6 Comparator 2 (MFGPT6_CMP2)	0000h	Page 520
34h	R/W	MFGPT6 Up Counter (MFGPT6_CNT)	0000h	Page 521
36h	R/W	MFGPT6 Setup (MFGPT6_SETUP)	0000h	Page 522
38h	R/W	MFGPT7 Comparator 1 (MFGPT7_CMP1)	0000h	Page 519
3Ah	R/W	MFGPT7 Comparator 2 (MFGPT7_CMP2)	0000h	Page 520
3Ch	R/W	MFGPT7 Up Counter (MFGPT7_CNT)	0000h	Page 521
3Eh	R/W	MFGPT7 Setup (MFGPT7_SETUP)	0000h	Page 522

6.17.1 MFGPT Specific MSRs

This register connects the MFGPT Comparator 1 and 2 outputs to the Interrupt Mapper.

6.17.1.1 MFGPT IRQ Mask (MFGPT_IRQ)

MSR Address 51400028h
Type R/W
Reset Value 00000000h

MFGPT_IRQ Register Map

31	30	29	28	27	26	25	24	23	22	21	20	19	18	17	16	15	14	13	12	11	10	9	8	7	6	5	4	3	2	1	0
RSVD																MFGPT7_C2_IRQM	MFGPT6_C2_IRQM	MFGPT5_C2_IRQM	MFGPT4_C2_IRQM	MFGPT3_C2_IRQM	MFGPT2_C2_IRQM	MFGPT1_C2_IRQM	MFGPT0_C2_IRQM	MFGPT7_C1_IRQM	MFGPT6_C1_IRQM	MFGPT5_C1_IRQM	MFGPT4_C1_IRQM	MFGPT3_C1_IRQM	MFGPT2_C1_IRQM	MFGPT1_C1_IRQM	MFGPT0_C1_IRQM

MFGPT_IRQ Bit Descriptions

Bit	Name	Description
31:16	RSVD	**Reserved.** Writes are don't cares.
15	MFGPT7_C2_IRQM	**Enable MFGPT7 Comparator 2 Output to the Interrupt Mapper**. When set high, this input becomes one of two, ORed together, to form "Unrestricted Sources Z", bit 7. The other bit in the ORed pair is bit 11, MFGPT3_C2_IRQM. The Unrestricted Sources Z are detailed in Table 5-14 "IRQ Map - Unrestricted Sources Z" on page 112. When cleared low, this MFGPT output does not contribute to the Unrestricted Sources Z interrupt.

Downloaded from Arrow.com.

MFGPT_IRQ Bit Descriptions

Bit	Name	Description
14	MFGPT6_C2_IRQM	**Enable MFGPT6 Comparator 2 Output to the Interrupt Mapper.** When set high, this input becomes one of two, ORed together, to form “Unrestricted Sources Z”, bit 6. The other bit in the ORed pair is bit 10, MFGPT2_C2_IRQM. The Unrestricted Sources Z are detailed in Table 5-14 "IRQ Map - Unrestricted Sources Z" on page 112. When cleared low, this MFGPT output does not contribute to the Unrestricted Sources Z interrupt.
13	MFGPT5_C2_IRQM	**Enable MFGPT5 Comparator 2 Output to the Interrupt Mapper.** When set high, this input becomes one of two, ORed together, to form “Unrestricted Sources Z”, bit 5. The other bit in the ORed pair is bit 9, MFGPT1_C2_IRQM. The Unrestricted Sources Z are detailed in Table 5-14 "IRQ Map - Unrestricted Sources Z" on page 112. When cleared low, this MFGPT output does not contribute to the Unrestricted Sources Z interrupt.
12	MFGPT4_C2_IRQM	**Enable MFGPT4 Comparator 2 Output to the Interrupt Mapper.** When set high, this input becomes one of two, ORed together, to form “Unrestricted Sources Z”, bit 4. The other bit in the ORed pair is bit 8, MFGPT0_C2_IRQM. The Unrestricted Sources Z are detailed in Table 5-14 "IRQ Map - Unrestricted Sources Z" on page 112. When cleared low, this MFGPT output does not contribute to the Unrestricted Sources Z interrupt.
11	MFGPT3_C2_IRQM	**Enable MFGPT3 Comparator 2 Output to the Interrupt Mapper.** When set high, this input becomes one of two, ORed together, to form “Unrestricted Sources Z”, bit 7. The other bit in the ORed pair is bit 15, MFGPT7_C2_IRQM. The Unrestricted Sources Z are detailed in Table 5-14 "IRQ Map - Unrestricted Sources Z" on page 112. When cleared low, this MFGPT output does not contribute to the Unrestricted Sources Z interrupt.
10	MFGPT2_C2_IRQM	**Enable MFGPT2 Comparator 2 Output to the Interrupt Mapper.** When set high, this input becomes one of two, ORed together, to form “Unrestricted Sources Z”, bit 6. The other bit in the ORed pair is bit 14, MFGPT6_C2_IRQM. The Unrestricted Sources Z are detailed in Table 5-14 "IRQ Map - Unrestricted Sources Z" on page 112. When cleared low, this MFGPT output does not contribute to the Unrestricted Sources Z interrupt.
9	MFGPT1_C2_IRQM	**Enable MFGPT1 Comparator 2 Output to the Interrupt Mapper.** When set high, this input becomes one of two, ORed together, to form “Unrestricted Sources Z”, bit 5. The other bit in the ORed pair is bit 13, MFGPT5_C2_IRQM. The Unrestricted Sources Z are detailed in Table 5-14 "IRQ Map - Unrestricted Sources Z" on page 112. When cleared low, this MFGPT output does not contribute to the Unrestricted Sources Z interrupt.
8	MFGPT0_C2_IRQM	**Enable MFGPT0 Comparator 2 Output to the Interrupt Mapper.** When set high, this input becomes one of two, ORed together, to form “Unrestricted Sources Z”, bit 4. The other bit in the ORed pair is bit 12, MFGPT4_C2_IRQM. The Unrestricted Sources Z are detailed in Table 5-14 "IRQ Map - Unrestricted Sources Z" on page 112. When cleared low, this MFGPT output does not contribute to the Unrestricted Sources Z interrupt.
7	MFGPT7_C1_IRQM	**Enable MFGPT7 Comparator 1 Output to the Interrupt Mapper.** When set high, this input becomes one of two, ORed together, to form “Unrestricted Sources Z”, bit 3. The other bit in the ORed pair is bit 3, MFGPT3_C1_IRQM. The Unrestricted Sources Z are detailed in Table 5-14 "IRQ Map - Unrestricted Sources Z" on page 112. When cleared low, this MFGPT output does not contribute to the Unrestricted Sources Z interrupt.

Downloaded from Arrow.com.

MFGPT_IRQ Bit Descriptions

Bit	Name	Description
6	MFGPT6_C1_IRQM	**Enable MFGPT6 Comparator 1 Output to the Interrupt Mapper.** When set high, this input becomes one of two, ORed together, to form “Unrestricted Sources Z”, bit 2. The other bit in the ORed pair is bit 2, MFGPT2_C1_IRQM. The Unrestricted Sources Z are detailed in Table 5-14 "IRQ Map - Unrestricted Sources Z" on page 112. When cleared low, this MFGPT output does not contribute to the Unrestricted Sources Z interrupt.
5	MFGPT5_C1_IRQM	**Enable MFGPT5 Comparator 1 Output to the Interrupt Mapper.** When set high, this input becomes one of two, ORed together, to form “Unrestricted Sources Z”, bit 1. The other bit in the ORed pair is bit 1, MFGPT1_C1_IRQM. The Unrestricted Sources Z are detailed in Table 5-14 "IRQ Map - Unrestricted Sources Z" on page 112. When cleared low, this MFGPT output does not contribute to the Unrestricted Sources Z interrupt.
4	MFGPT4_C1_IRQM	**Enable MFGPT4 Comparator 1 Output to the Interrupt Mapper.** When set high, this input becomes one of two, ORed together, to form “Unrestricted Sources Z”, bit 0. The other bit in the ORed pair is bit 0, MFGPT0_C1_IRQM. The Unrestricted Sources Z are detailed in Table 5-14 "IRQ Map - Unrestricted Sources Z" on page 112. When cleared low, this MFGPT output does not contribute to the Unrestricted Sources Z interrupt.
3	MFGPT3_C1_IRQM	**Enable MFGPT3 Comparator 1 Output to the Interrupt Mapper.** When set high, this input becomes one of two, ORed together, to form “Unrestricted Sources Z”, bit 3. The other bit in the ORed pair is bit 7, MFGPT7_C1_IRQM. The Unrestricted Sources Z are detailed in Table 5-14 "IRQ Map - Unrestricted Sources Z" on page 112. When cleared low, this MFGPT output does not contribute to the Unrestricted Sources Z interrupt.
2	MFGPT2_C1_IRQM	**Enable MFGPT2 Comparator 1 Output to the Interrupt Mapper.** When set high, this input becomes one of two, ORed together, to form “Unrestricted Sources Z”, bit 2. The other bit in the ORed pair is bit 6, MFGPT6_C1_IRQM. The Unrestricted Sources Z are detailed in Table 5-14 "IRQ Map - Unrestricted Sources Z" on page 112. When cleared low, this MFGPT output does not contribute to the Unrestricted Sources Z interrupt.
1	MFGPT1_C1_IRQM	**Enable MFGPT1 Comparator 1 Output to the Interrupt Mapper.** When set high, this input becomes one of two, ORed together, to form “Unrestricted Sources Z”, bit 1. The other bit in the ORed pair is bit 5, MFGPT5_C1_IRQM. The Unrestricted Sources Z are detailed in Table 5-14 "IRQ Map - Unrestricted Sources Z" on page 112. When cleared low, this MFGPT output does not contribute to the Unrestricted Sources Z interrupt.
0	MFGPT0_C1_IRQM	**Enable MFGPT0 Comparator 1 Output to the Interrupt Mapper.** When set high, this input becomes one of two, ORed together, to form “Unrestricted Sources Z”, bit 0. The other bit in the ORed pair is bit 4, MFGPT4_C1_IRQM. The Unrestricted Sources Z are detailed in Table 5-14 "IRQ Map - Unrestricted Sources Z" on page 112. When cleared low, this MFGPT output does not contribute to the Unrestricted Sources Z interrupt.

Downloaded from Arrow.com.

6.17.1.2 MFGPT NMI and Reset Mask (MFGPT_NR)

This register enables the MFGPT Comparator 1 and 2 outputs to generate resets or NMIs.

MSR Address 51400029h
Type R/W
Reset Value 00000000h

MFGPT_NR Register Map

31	30	29	28	27	26	25	24	23	22	21	20	19	18	17	16	15	14	13	12	11	10	9	8	7	6	5	4	3	2	1	0
RSVD		MFGPT5_C2_RSTEN	MFGPT4_C2_RSTEN	MFGPT3_C2_RSTEN	MFGPT2_C2_RSTEN	MFGPT1_C2_RSTEN	MFGPT0_C2_RSTEN	RSVD							NMI_LEG	MFGPT7_C2_NMIM	MFGPT6_C2_NMIM	MFGPT5_C2_NMIM	MFGPT4_C2_NMIM	MFGPT3_C2_NMIM	MFGPT2_C2_NMIM	MFGPT1_C2_NMIM	MFGPT0_C2_NMIM	MFGPT7_C1_NMIM	MFGPT6_C1_NMIM	MFGPT5_C1_NMIM	MFGPT4_C1_NMIM	MFGPT3_C1_NMIM	MFGPT2_C1_NMIM	MFGPT1_C1_NMIM	MFGPT0_C1_NMIM

MFGPT_NR Bit Descriptions

Bit	Name	Description
31:30	RSVD	**Reserved.** Writes are don't care; reads return 0.
29	MFGPT5_C2_RSTEN	**MFGPT5 Comparator 2 Reset Enable.** Allow MFGPT5 Comparator 2 output to cause a hard reset. 0: Disable; 1: Enable.
28	MFGPT4_C2_RSTEN	**MFGPT4 Comparator 2 Reset Enable.** Allow MFGPT4 Comparator 2 output to cause a hard reset. 0: Disable; 1: Enable.
27	MFGPT3_C2_RSTEN	**MFGPT3 Comparator 2 Reset Enable.** Allow MFGPT3 Comparator 2 output to cause a hard reset. 0: Disable; 1: Enable.
26	MFGPT2_C2_RSTEN	**MFGPT2 Comparator 2 Reset Enable.** Allow MFGPT2 Comparator 2 output to cause a hard reset. 0: Disable; 1: Enable.
25	MFGPT1_C2_RSTEN	**MFGPT1 Comparator 2 Reset Enable.** Allow MFGPT1 Comparator 2 output to cause a hard reset. 0: Disable; 1: Enable.
24	MFGPT0_C2_RSTEN	**MFGPT0 Comparator 2 Reset Enable.** Allow MFGPT0 Comparator 2 output to cause a hard reset. 0: Disable; 1: Enable.
23:17	RSVD	**Reserved.** Writes are don't care; reads return 0.
16	NMI_LEG	**Legacy NMI.** Allow legacy NMI mask bit (bit 7 of RTC register at I/O Address 070h) to gate NMI. 0: Disable; 1: Enable.
15	MFGPT7_C2_NMIM	**MFGPT7 Comparator 2 NMI Enable.** Allow MFGPT7 Comparator 2 output to cause an NMI. 0: Disable; 1: Enable.
14	MFGPT6_C2_NMIM	**MFGPT6 Comparator 2 NMI Enable.** Allow MFGPT6 Comparator 2 output to cause an NMI. 0: Disable; 1: Enable.
13	MFGPT5_C2_NMIM	**MFGPT5 Comparator 2 NMI Enable.** Allow MFGPT5 Comparator 2 output to cause an NMI. 0: Disable; 1: Enable.
12	MFGPT4_C2_NMIM	**MFGPT4 Comparator 2 NMI Enable.** Allow MFGPT4 Comparator 2 output to cause an NMI. 0: Disable; 1: Enable.
11	MFGPT3_C2_NMIM	**MFGPT3 Comparator 2 NMI Enable.** Allow MFGPT3 Comparator 2 output to cause an NMI. 0: Disable; 1: Enable.
10	MFGPT2_C2_NMIM	**MFGPT2 Comparator 2 NMI Enable.** Allow MFGPT2 Comparator 2 output to cause an NMI. 0: Disable; 1: Enable.
9	MFGPT1_C2_NMIM	**MFGPT1 Comparator 2 NMI Enable.** Allow MFGPT1 Comparator 2 output to cause an NMI. 0: Disable; 1: Enable.

Downloaded from Arrow.com.

MFGPT_NR Bit Descriptions

Bit	Name	Description
8	MFGPT0_C2_NMIM	**MFGPT0 Comparator 2 NMI Enable.** Allow MFGPT0 Comparator 2 output to cause an NMI. 0: Disable; 1: Enable.
7	MFGPT7_C1_NMIM	**MFGPT7 Comparator 1 NMI Enable.** Allow MFGPT7 Comparator 1 output to cause an NMI. 0: Disable; 1: Enable.
6	MFGPT6_C1_NMIM	**MFGPT6 Comparator 1 NMI Enable.** Allow MFGPT6 Comparator 1 output to cause an NMI. 0: Disable; 1: Enable.
5	MFGPT5_C1_NMIM	**MFGPT5 Comparator 1 NMI Enable.** Allow MFGPT5 Comparator 1 output to cause an NMI. 0: Disable; 1: Enable.
4	MFGPT4_C1_NMIM	**MFGPT4 Comparator 1 NMI Enable.** Allow MFGPT4 Comparator 1 output to cause an NMI. 0: Disable; 1: Enable.
3	MFGPT3_C1_NMIM	**MFGPT3 Comparator 1 NMI Enable.** Allow MFGPT3 Comparator 1 output to cause an NMI. 0: Disable; 1: Enable.
2	MFGPT2_C1_NMIM	**MFGPT2 Comparator 1 NMI Enable.** Allow MFGPT2 Comparator 1 output to cause an NMI. 0: Disable; 1: Enable.
1	MFGPT1_C1_NMIM	**MFGPT1 Comparator 1 NMI Enable.** Allow MFGPT1 Comparator 1 output to cause an NMI. 0: Disable; 1: Enable.
0	MFGPT0_C1_NMIM	**MFGPT0 Comparator 1 NMI Enable.** Allow MFGPT0 Comparator 1 output to cause an NMI. 0: Disable; 1: Enable.

6.17.1.3 MFGPT Reserved (MFGPT_RSVD)

MSR Address 5140002Ah
Type R/W
Reset Value 00000000h

This register is reserved. Reads return 0. Writes have no effect.

6.17.1.4 MFGPT Clear Setup Test (MFGPT_SETUP)

MSR Address 5140002Bh
Type WO
Reset Value 00000000h

MFGPT_SETUP Register Map

31	30	29	28	27	26	25	24	23	22	21	20	19	18	17	16	15	14	13	12	11	10	9	8	7	6	5	4	3	2	1	0
RSVD																															

MFGPT_SETUP Bit Descriptions

Bit	Name	Description
31:0	RSVD	**Reserved.** These bits are reserved for internal testing only. These bits should not be written to.

Downloaded from Arrow.com.

6.17.2 MFGPT Native Registers

6.17.2.1 MFGPT[x] Comparator 1 (MFGPT[x]_CMP1)

MFGPT0 to MFGPT5 CMP1 registers are in the Working power domain while MFGPT6 and MFGPT7 CMP1 registers are in the Standby power domain.

MFGPT0 Comparator 1 (MFGPT0_CMP1)
MFGPT I/O Offset 00h
Type R/W
Reset Value 0000h

MFGPT1 Comparator 1 (MFGPT1_CMP1)
MFGPT I/O Offset 08h
Type R/W
Reset Value 0000h

MFGPT2 Comparator 1 (MFGPT2_CMP1)
MFGPT I/O Offset 10h
Type R/W
Reset Value 0000h

MFGPT3 Comparator 1 (MFGPT3_CMP1)
MFGPT I/O Offset 18h
Type R/W
Reset Value 0000h

MFGPT4 Comparator 1 (MFGPT4_CMP1)
MFGPT I/O Offset 20h
Type R/W
Reset Value 0000h

MFGPT5 Comparator 1 (MFGPT5_CMP1)
MFGPT I/O Offset 28h
Type R/W
Reset Value 0000h

MFGPT6 Comparator 1 (MFGPT6_CMP1)
MFGPT I/O Offset 30h
Type R/W
Reset Value 0000h

MFGPT7 Comparator 1 (MFGPT7_CMP1)
MFGPT I/O Offset 38h
Type R/W
Reset Value 0000h

MFGPT[x]_CMP1 Register Map

15	14	13	12	11	10	9	8	7	6	5	4	3	2	1	0
MFGPT_CMP1_VAL															

MFGPT[x]_CMP1 Bit Descriptions

Bit	Name	Description
15:0	MFGPT_CMP1_VAL	**Comparator 1 Comparison Value.** This 16-bit value is the compare value for Comparator 1 of MFGPT[x].

Downloaded from Arrow.com.

6.17.2.2 MFGPT[x] Comparator 2 (MFGPT[x]_CMP2)

MFGPT0 to MFGPT5 CMP2 registers are in the Working power domain while MFGPT6 and MFGPT7 CMP2 registers are in the Standby power domain.

MFGPT0 Comparator 2 (MFGPT0_CMP2)
MFGPT I/O Offset 02h
Type R/W
Reset Value 0000h

MFGPT1 Comparator 2 (MFGPT1_CMP2)
MFGPT I/O Offset 0Ah
Type R/W
Reset Value 0000h

MFGPT2 Comparator 2 (MFGPT2_CMP2)
MFGPT I/O Offset 12h
Type R/W
Reset Value 0000h

MFGPT3 Comparator 2 (MFGPT3_CMP2)
MFGPT I/O Offset 1Ah
Type R/W
Reset Value 0000h

MFGPT4 Comparator 2 (MFGPT4_CMP2)
MFGPT I/O Offset 22h
Type R/W
Reset Value 0000h

MFGPT5 Comparator 2 (MFGPT5_CMP2)
MFGPT I/O Offset 2Ah
Type R/W
Reset Value 0000h

MFGPT6 Comparator 2 (MFGPT6_CMP2)
MFGPT I/O Offset 32h
Type R/W
Reset Value 0000h

MFGPT7 Comparator 2 (MFGPT7_CMP2)
MFGPT I/O Offset 3Ah
Type R/W
Reset Value 0000h

MFGPT[x]_CMP2 Register Map

15	14	13	12	11	10	9	8	7	6	5	4	3	2	1	0
MFGPT_CMP2_VAL															

MFGPT[x]_CMP2 Bit Descriptions

Bit	Name	Description
15:0	MFGPT_CMP2_VAL	**Comparator 2 Comparison Value.** This 16-bit value is the compare value for Comparator 2 of MFGPT[x].

Downloaded from Arrow.com.

6.17.2.3 MFGPT[x] Up Counter (MFGPT[x]_CNT)

MFGPT0 to MFGPT5 Up Counter registers are in the Working power domain while MFGPT6 and MFGPT7 Up Counter registers are in the Standby power domain.

MFGPT0 Up Counter (MFGPT0_CNT)
MFGPT I/O Offset 04h
Type R/W
Reset Value 0000h

MFGPT1 Up Counter (MFGPT1_CNT)
MFGPT I/O Offset 0Ch
Type R/W
Reset Value 0000h

MFGPT2 Up Counter (MFGPT2_CNT)
MFGPT I/O Offset 14h
Type R/W
Reset Value 0000h

MFGPT3 Up Counter (MFGPT3_CNT)
MFGPT I/O Offset 1Ch
Type R/W
Reset Value 0000h

MFGPT4 Up Counter (MFGPT4_CNT)
MFGPT I/O Offset 24h
Type R/W
Reset Value 0000h

MFGPT5 Up Counter (MFGPT5_CNT)
MFGPT I/O Offset 2Ch
Type R/W
Reset Value 0000h

MFGPT6 Up Counter (MFGPT6_CNT)
MFGPT I/O Offset 34h
Type R/W
Reset Value 0000h

MFGPT7 Up Counter (MFGPT7_CNT)
MFGPT I/O Offset 3Ch
Type R/W
Reset Value 0000h

MFGPT[x]_CNT Register Map

15	14	13	12	11	10	9	8	7	6	5	4	3	2	1	0
MFGPT_CNT															

MFGPT[x]_CNT Bit Descriptions

Bit	Name	Description
15:0	MFGPT_CNT	**Up Counter Value.** This register contains the current value of the counter of MFGPT[x}. Hardware guarantees that reading or writing may be performed at any time without experiencing aliasing or ‘intermediate-value’ problems.

Downloaded from Arrow.com.

6.17.2.4 MFGPT[x] Setup (MFGPT[x]_SETUP)

MFGPT0 to MFGPT5 Setup registers are in the Working power domain while MFGPT6 and MFGPT7 Setup registers are in the Standby power domain. Bits [11:0] are write-once; bit 12 is read-only.

MFGPT0 Setup (MFGPT0_SETUP)
MFGPT I/O Offset 06h
Type R/W
Reset Value 0000h

MFGPT1 Setup (MFGPT1_SETUP)
MFGPT I/O Offset 0Eh
Type R/W
Reset Value 0000h

MFGPT2 Setup (MFGPT2_SETUP)
MFGPT I/O Offset 16h
Type R/W
Reset Value 0000h

MFGPT3 Setup (MFGPT3_SETUP)
MFGPT I/O Offset 1Eh
Type R/W
Reset Value 0000h

MFGPT4 Setup (MFGPT4_SETUP)
MFGPT I/O Offset 26h
Type R/W
Reset Value 0000h

MFGPT5 Setup (MFGPT5_SETUP)
MFGPT I/O Offset 2Eh
Type R/W
Reset Value 0000h

MFGPT6 Setup (MFGPT6_SETUP)
MFGPT I/O Offset 36h
Type R/W
Reset Value 0000h

MFGPT7 Setup (MFGPT7_SETUP)
MFGPT I/O Offset 3Eh
Type R/W
Reset Value 0000h

MFGPT[x]_SETUP Register Map

15	14	13	12	11	10	9	8	7	6	5	4	3	2	1	0
MFGPT_CNT_EN	MFGPT_CMP2	MFGPT_CMP1	MFGPT_SETUP	MFGPT_STOP_EN	MFGPT_EXT_EN	MFGPT_CMP2MODE		MFGPT_CMP1MODE		MFGPT_REV_EN	MFGPT_CLKSEL	MFGPT_SCALE			

MFGPT[x]_SETUP Bit Descriptions

Bit	Name	Description
15	MFGPT_CNT_EN	**Counter Enable.** Enable MFGPT for counting. 0: Disable; 1: Enable.
14	MFGPT_CMP2	**Compare 2 Output Status.** If Conditioning Mode is set to Event, writing this bit to a 1 clears the event until the next time Compare 2 goes from low-to-high; reading returns the event status. For other modes, this bit follows current compare output values and writes to this bit have no effect. When Compare 2 value is met, the counter is reset and counting continues.
13	MFGPT_CMP1	**Compare 1 Output Status.** If Conditioning Mode is set to Event, writing this bit to a 1 clears the event until the next time Compare 1 goes from low-to-high; reading returns the event status. For other modes, this bit follows current compare output values and writes to this bit have no effect.
12	MFGPT_SETUP (RO)	**Setup (Read Only).** Any value written to this bit is a ‘don’t care’. From reset, this bit is low. If low, it indicates the MFGPT has not been setup and is currently disabled. On the first write to this register, bits [11:0] are established per the write and this bit is set to a 1. After this bit is set on the first write, bits [12:0] cannot be changed and subsequent writes are ‘don’t care’.
11	MFGPT_STOP_EN	**Stop Enable (Write Once).** Enable counter to Stop on Sleep state for MFGPT0 to MFGPT5, or Standby state for MFGPT6 and MFGPT7. 0: Disable; 1: Enable.

Downloaded from Arrow.com.

MFGPT[x]_SETUP Bit Descriptions (Continued)

Bit	Name	Description
10	MFGPT_EXT_EN	**External Enable (Write Once)** External pin enabled to be MFGPT clear input. 0: Disable; 1: Enable.
9:8	MFGPT_CMP2MODE	**Compare 2 Mode (Write Once).** 00: Disable; output always low. 01: Compare on Equal; output high only on compare equal. 10: Compare on GE; output high on compare greater than or equal. 11: Event; same as 'Compare on GE' but also can activate IRQ, NMI and reset.
7:6	MFGPT_CMP1MODE	**Compare 1 Mode (Write Once).** 00: Disable; output always low. 01: Compare on Equal; output high only on compare equal. 10: Compare on GE; output high on compare greater than or equal. 11: Event; same as 'Compare on GE' but also can activate IRQ, NMI and reset.
5	MFGPT_REV_EN	**Reverse Enable (Write Once).** Bit reverse enable for counter output to Compare. 0: Disable; 1: Enable.
4	MFGPT_CLKSEL	**Clock Select (Write Once).** For MFGPT0 to MFGPT5 only; no effect on MFGPT6 and MFGPT7. 0: 32 KHz clock. 1: 14.318 MHz clock
3:0	MFGPT_SCALE	**Counter Prescaler Scale Factor (Write Once).** Selects input clock divide-by value. 0000: 1 0001: 2 0010: 4 0011: 8 0100: 16 0101: 32 0110: 64 0111: 128 1000: 256 1001: 512 1010: 1024 1011: 2048 1100: 4096 1101: 8192 1110: 16384 1111: 32768

Downloaded from Arrow.com.

6.18 Power Management Controller Register Descriptions

The registers for the Power Management Controller (PMC) are divided into four sets:

- Standard GeodeLink™ Device (GLD) MSRs (Shared with DIVIL, see Section 6.6.1 on page 348.)
- PMC Specific MSRs
- ACPI Registers
- PM Support Registers

The MSRs are accessed via the RDMSR and WRMSR processor instructions. The MSR address is derived from the perspective of the CPU Core. See Section 4.2 "MSR Addressing" on page 60 for more details on MSR addressing.

All MSRs are 64 bits, however, the PMC Specific MSRs (summarized in Table 6-69) are called out as 32 bits. The PMC device treats writes to the upper 32 bits (i.e., bits [63:32]) of the 64-bit MSRs as don't cares and always returns 0 on these bits.

The configuration registers associated with the PMC are divided into two categories: ACPI registers (summarized in Table 6-70) and PM Support registers (summarized in Table 6-71 on page 525):

- The ACPI registers are accessed via Base Address Register, MSR_LBAR_ACPI (MSR 5140000Eh), as I/O Offsets. (See Section 6.6.2.6 on page 360 for bit descriptions of the Base Address Register.)
- The PM Support registers are accessed via a Base Address Register, MSR_LBAR_PMS (MSR 5140000Fh), as I/O Offsets. (See Section 6.6.2.7 on page 361 for bit descriptions of the Base Address Register.)

Table 6-69. PMC Specific MSRs Summary

MSR Address	Type	Register Name	Power Domain	Reset Value	Reference
51400050h	R/W	PMC Logic Timer (PMC_LTMR)	Working	00000000h	Page 526
51400051h	R/W	PMC Reserved (PMC_RSVD)	No f/flops	00000000h	Page 526

Table 6-70. ACPI Registers Summary

ACPI I/O Offset	Type	Register Name	Power Domain	Reset Value	Reference
00h	R/W	PM Status 1 (PM1_STS) (Note 1 and Note 2)	Standby	0000h	Page 526
02h	R/W	PM Enable 1 (PM1_EN) (Note 1 and Note 2)	Standby	0100h	Page 528
08h	R/W	PM Control 1 (PM1_CNT) (Note 1 and Note 3)	Working	0000h	Page 529
0Ch	R/W	PM Control 2 (PM2_CNT) (Note 4)	Working	0000h	Page 530
10h	RO	PM Timer (PM_TMR) (Note 1)	Working	0000h	Page 530
14h	R/W	PM Reserved (PM_RSVD)	No f/flops	0000h	---
18h	R/W	General Purpose Events Status 0 (PM_GPE0_STS) (Note 5)	Standby	00000000h	Page 531
1Ch	R/W	General Purpose Events Enable 0 (PM_GPE0_EN) (Note 5)	Standby	00000000h	Page 533

Note 1. Required ACPI register.
Note 2. Both PM1_STS and PM1_EN access Offset 00h when using 32-bit access.
Only PM1_STS with a 16-bit access to Offset 00h.
Only PM1_EN with a 16-bit access to Offset 02h.
Offset 04h is reserved. Reads return 0.
Note 3. SSMI may be implemented on this register by decode hardware outside of the PMC device.
Note 4. Optional ACPI register. SSMI may be implemented on this register by decode hardware outside of the PMC device.
Note 5. Required ACPI register that can also be implemented via a control method.

Downloaded from Arrow.com.

Table 6-71. PM Support Registers Summary

PMS I/O Offset	Type	Register Name	Power Domain	Reset Value	Reference
00h	R/W	PM Sleep Start Delay (PM_SSD)	Working	0000h	Page 534
04h	R/W	PM Sleep Control X Assert Delay and Enable (PM_SCXA)	Working	00000000h	Page 535
08h	R/W	PM Sleep Control Y Assert Delay and Enable (PM_SCYA)	Working	00000000h	Page 535
0Ch	R/W	PM Sleep Output Disable Assert Delay and Enable (PM_OUT_SLPCTL)	Working	00000000h	Page 536
10h	R/W	PM Sleep Clock Delay and Enable (PM_SCLK)	Working	00000000h	Page 537
14h	R/W	PM Sleep End Delay (PM_SED)	Working	00000000h	Page 538
18h	R/W	PM Sleep Control X De-assert Delay (PM_SCXD)	Working	00000000h	Page 538
1Ch	R/W	PM Sleep Control Y De-assert Delay (PM_SCYD)	Working	00000000h	Page 539
20h	R/W	PM PCI and IDE Input Sleep Control (PM_IN_SLPCTL)	Working	00000000h	Page 540
24h-2Ch	R/W	PM Reserved (PM_RSVD) (Reads as 0.)	No f/flops	00000000h	---
30h	R/W	PM Working De-assert Delay and Enable (PM_WKD)	Standby	00000000h	Page 540
34h	R/W	PM Working Auxiliary De-assert Delay and Enable (PM_WKXD)	Standby	00000000h	Page 541
38h	R/W	PM De-assert Reset Delay from Standby (PM_RD)	Standby	40000100h	Page 542
3Ch	R/W	PM Working Auxiliary Assert Delay from Standby Wakeup (PM_WKXA)	Standby	00000000h	Page 543
40h	R/W	PM Fail-Safe Delay and Enable (PM_FSD)	Standby	00000000h	Page 544
44h	R/W	PM Thermal-Safe Delay and Enable (PM_TSD)	Standby	00000000h	Page 544
48h	R/W	PM Power-Safe Delay and Enable (PM_PSD)	Standby	00000000h	Page 545
4Ch	R/W	PM Normal Work Delay and Enable (PM_NWKD)	Standby	00000000h	Page 546
50h	R/W	PM Abnormal Work Delay and Enable (PM_AWKD)	Standby	00000000h	Page 546
54h	R/W	PM Standby Status and Control (PM_SSC)	Standby	00000001h	Page 547
58h-7Fh	R/W	PM Reserved (PM_RSVD) (Reads as 0.)	No f/flops	00000000h	---

Downloaded from Arrow.com.

6.18.1 PMC Specific MSRs

6.18.1.1 PMC Logic Timer (PMC_LTMR)

MSR Address 51400050h
Type R/W
Reset Value 00000000h

PMC_LTMR Register Map

31	30	29	28	27	26	25	24	23	22	21	20	19	18	17	16	15	14	13	12	11	10	9	8	7	6	5	4	3	2	1	0
MSR_PML_TMR																															

PMC_LTMR Bit Descriptions

Bit	Name	Description
31:0	MSR_PML_TMR	**Legacy Power Management Timer.** 32-bit read/writes of timer counter. Writes initialize the counter value; reads return current timer counter value.

6.18.1.2 PMC Reserved (PMC_RSVD)

MSR Address 51400051h
Type R/W
Reset Value 00000000h

PMC_RSVD Register Map

31	30	29	28	27	26	25	24	23	22	21	20	19	18	17	16	15	14	13	12	11	10	9	8	7	6	5	4	3	2	1	0
PMC_RSVD																															

PMC_RSVD Bit Descriptions

Bit	Name	Description
31:0	PMC_RSVD	**Reserved.** This is a reserved register and should not be accessed by user software. By convention write 0, but other values are “don’t care”. Reads always return 0.

6.18.2 ACPI Registers

6.18.2.1 PM Status 1 (PM1_STS)

ACPI I/O Offset 00h
Type R/W
Reset Value 0000h

PM1_STS is the Status register for Timer Carry, Button, and RTC Alarm wakeup events. All bits in this register are cleared by the Standby state except bits 15, 10, and 8. They maintain their state through Standby.

PM1_STS Register Map

15	14	13	12	11	10	9	8	7	6	5	4	3	2	1	0
WAK_FLAG	RSVD			IGNORE	RTC_FLAG	SLPBTN_FLAG	PWRBTN_FLAG	RSVD		GBL_FLAG	BM_FLAG	RSVD			TMR_FLAG

Downloaded from Arrow.com.

PM1_STS Bit Descriptions

Bit	Name	Description
15	WAK_FLAG (Note 1, Note 2)	**Wakeup Event Flag.** This bit is set high by the hardware when any wakeup event occurs. Write 1 to clear; writing 0 has no effect.
14:12	RSVD	**Reserved.** By convention write 0, but other values are “don’t care”. Reads always return 0.
11	IGNORE	**Ignore.** By ACPI convention not used by software. Reads always return 0. To support the Global Status Lock Flag bit, writing a 1 to this bit sets bit 5. Writing 0 has no effect.
10	RTC_FLAG	**Real-Time Clock Alarm Flag.** This bit is set high by the hardware when the RTC generates an alarm. If RTC_EN (ACPI I/O Offset 02h[10]) is high, an SCI is generated. Write 1 to clear; writing 0 has no effect.
9	SLPBTN_FLAG	**Sleep Button Flag.** This bit is set high by the hardware when the “sleep button” is pushed. If SLPBTN_EN (ACPI I/O Offset 02h[9]) is high, an SCI is generated. Write 1 to clear; writing 0 has no effect.
8	PWRBTN_FLAG	**Power Button Flag.** This bit is set high by the hardware when the “power button” is pushed. If PWRBTN_EN (ACPI I/O Offset 02h[8]) is high, an SCI is generated. Write 1 to clear; writing 0 has no effect.
7:6	RSVD	**Reserved.** By convention write 0, but other values are “don’t care”. Reads always return 0.
5	GBL_FLAG	**Global Lock Flag.** If high, indicates that the BIOS released control of Global Lock Status bit. This bit is cleared by writing a 1 to it. This bit is set by writing a 1 to bit 11 (IGNORE). If GLB_EN (ACPI I/O Offset 02h[5]) is high, an SCI is generated.
4	BM_FLAG	**Bus Master Flag.** This bit indicates a master has requested the bus. Used to indicate a possible incoherent cache when the processor is in state C3. This function is not supported because the CS5536 companion device does not support the C3 state. By convention write 0, but other values are “don’t care”. Reads return 0.
3:1	RSVD	**Reserved.** By convention write 0, but other values are “don’t care”. Reads always return 0.
0	TMR_FLAG	**Timer Carry Flag**. This bit is set high by the hardware anytime the Power Management Timer rolls over from all 1s back to 0. If TMR_EN (ACPI I/O Offset 02h[0]) is high, an SCI is generated when the rollover occurs. Write 1 to clear; writing 0 has no effect.

Note 1. A wakeup event can come from any event enabled by PM1_EN (ACPI I/O Offset 02h) or PM_GPE0_EN (ACPI I/O Offset 1Ch). A wakeup will occur even if the SCI is not mapped to an ASMI or IRQ.

Note 2. After starting a Sleep sequence, software would normally spin by entering a polling loop on the WAK_FLAG. This bit is normally (software has cleared it from last Sleep) 0 before starting a Sleep sequence. The Sleep sequence puts the processor in Suspend while it is spinning. When the sequence brings the processor out of Suspend, the WAK_FLAG bit is set. The Sleep sequence starts when SLP_EN (ACPI I/O Offset 08h[13]) is written to a 1.

Downloaded from Arrow.com.

6.18.2.2 PM Enable 1 (PM1_EN)

ACPI I/O Offset 02h
Type R/W
Reset Value 0100h

PM1_EN is the Enable register for Timer Carry, Button, and RTC Alarm wakeup events. All bits in this register are cleared by the Standby state except bits 10, 8, and 5. They maintain their state through Standby. All bits in this register return the value written when read, except for the Reserved bits.

If enabled, any of the SCIs cause a wakeup event if the system state is Sleep or Standby (except TMR and GBL).

PM1_EN Register Map

15	14	13	12	11	10	9	8	7	6	5	4	3	2	1	0
RSVD					RTC_EN	SLPBTN_EN	PWRBTN_EN	RSVD		GLB_EN	RSVD				TMR_EN

PM1_EN Bit Descriptions

Bit	Name	Description
15:11	RSVD	**Reserved.** By convention write 0, but other values are “don’t care”. Reads return 0 value.
10	RTC_EN	**Real-Time Clock SCI Enable.** Enables generating an SCI when RTC_FLAG (ACPI I/O Offset 00h[10]) gets set. Also enables wakeup from this event. 0: Disable. 1: Enable.
9	SLPBTN_EN	**Sleep Button SCI Enable.** Enables generating an SCI when SLPBTN_FLAG (ACPI I/O Offset 00h[9]) gets set. Also enables wakeup from this event. 0: Disable. 1: Enable.
8	PWRBTN_EN	**Power Button SCI Enable.** Enables generating an SCI when PWRBTN_FLAG (ACPI I/O Offset 00h[8]) gets set. Also enables wakeup from this event. 0: Disable. 1: Enable. (Default)
7:6	RSVD	**Reserved.** By convention write 0, but other values are “don’t care”. Reads return 0 value.
5	GLB_EN	**Global Enable.** Enables generating an SCI when GLB_FLAG (ACPI I/O Offset 00h[5]) gets set. There is no wakeup concept for this event. 0: Disable. 1: Enable.
4:1	RSVD	**Reserved.** By convention write 0, but other values are “don’t care”. Reads return 0 value.
0	TMR_EN	**Timer SCI Enable.** Enables generating an SCI when TMR_FLAG (ACPI I/O Offset 00h[0]) gets set. There is no wakeup concept for this event. 0: Disable. 1: Enable.

Downloaded from Arrow.com.

6.18.2.3 PM Control 1 (PM1_CNT)

ACPI I/O Offset 08h
Type R/W
Reset Value 0000h

PM1_CNT is the Control register for global and the Sleep state settings.

PM1_CNT Register Map

15	14	13	12	11	10	9	8	7	6	5	4	3	2	1	0
RSVD		SLP_EN	SLP_TYPx			IGNORE	RSVD						GBL_RLS	BM_RLD	SCI_EN

PM1_CNT Bit Descriptions

Bit	Name	Description
15:14	RSVD	**Reserved.** By convention write 0, but other values are “don’t care”. Reads always return 0.
13	SLP_EN (WO)	**Sleep Enable (Write Only).** This is a write-only bit and reads to it always return 0. Setting this bit causes the system to sequence into the Sleep state defined by SLP_TYPx (bits [12:10]). After the delay in SLP_DELAY (PMS I/O Offset 00h[11:0]), the system state begins the move from Working to Sleeping or Standby state. The Sleep Request/Sleep Acknowledge sequenced is started. The sequence may be aborted by writing SLP_EN_INDIC (PMS I/O Offset 00h[15]).
12:10	SLP_TYPx	**Sleep Type.** Defines the type of Sleep state the system enters when SLP_EN (bit 13) is set to 1. Reads always return the value written. These bits do not directly affect the internal hardware, but are required by the ACPI specification. When this register is accessed, VSA code traps the access and transfers bits written here to the appropriate locations to set up the desired power management mode. The Sleep type is directly controlled by GLCP settings, individual GeodeLink Device Power Management MSR settings, and PML settings.
9	IGNORE	**Ignore.** By convention not used by ACPI software. Software always writes 0. If a 1 was written to bit 2 (GBL_RLS), this bit is set, that is, a read of this bit returns a 1. Write 1 to clear; writing 0 has no effect.
8:3	RSVD	**Reserved.** By convention write 0, but other values are “don’t care”. Reads always return 0.
2	GBL_RLS	**Global Lock Release.** This is the “release of global lock” bit. The ACPI driver writes this bit to a 1 to rise an event to the BIOS. The write indicates the release of global lock. Reads always return 0. Writing a 1 to this bit sets bit 9 (IGNORE).
1	BM_RLD	**Bus Master RLD.** When high, this bit allows the generation of a bus master request to cause any processor in the C3 state to transition to the C0 state. Reads return the value written. In the CS5536 companion device, the C3 state is NOT supported. Other than serving as an indicator, this bit does nothing.
0	SCI_EN	**SCI Enable.** When low, indicates native power management mode. When high, indicates ACPI mode. Reads return the value written. Other than serving as an indicator, this bit does not directly affect the hardware.

Downloaded from Arrow.com.

6.18.2.4 PM Control 2 (PM2_CNT)

ACPI I/O Offset 0Ch
Type R/W
Reset Value 0000h

PM2_CNT is the Control register for enabling/disabling the system arbiter. This register is not implemented. Writes “don’t care. Reads return 0. This register may be accessed with 8-bit or 16-bit I/O.

PM2_CNT Register Map

15	14	13	12	11	10	9	8	7	6	5	4	3	2	1	0
RSVD								RSVD							ARB_DIS

PM2_CNT Bit Descriptions

Bit	Name	Description
15:8	RSVD	**Reserved.** ACPI defines this as an 8-bit register. It has been extended so that all PML registers are at least 16 bits. Writes to these bits are a “don’t care”. Reads always return 0.
7:1	RSVD	**Reserved.** By convention write 0, but other values are “don’t care”. Reads return 0 value.
0	ARB_DIS	**System Arbiter Disable**. Disables when high. Reads return value written. This bit is required by the ACPI specification, but internally is not connected to any PM logic.

6.18.2.5 PM Timer (PM_TMR)

ACPI I/O Offset 10h
Type RO
Reset Value 00000000h

PM_TMR is the data value register for the 32-bit timer running from the 3.579 MHz clock.

PM_TMR Register Map

31	30	29	28	27	26	25	24	23	22	21	20	19	18	17	16	15	14	13	12	11	10	9	8	7	6	5	4	3	2	1	0
TMR_VAL																															

PM_TMR Bit Descriptions

Bit	Name	Description
31:0	TMR_VAL (RO)	**Timer Value (Read Only).** This read only counter is driven by the 3.579545 MHz clock. Writes are always a “don’t care”. The counter runs continuously as long as the system is in the Working state; otherwise, counting is stopped. It stops counting when SUSP# is asserted and starts counting when SUSPA# has been de-asserted after having been asserted. The value in this register is lost in the Standby state.

Downloaded from Arrow.com.

6.18.2.6 General Purpose Events Status 0 (PM_GPE0_STS)

ACPI I/O Offset 18h
Type R/W
Reset Value 00000000h

PM_GPE0_STS is the Status register for General Purpose Events. Status events are cleared by writing a 1 to the appropriate FLAG bit. Writing 0 has no effect. By convention, bits [23:0] are associated with the Working domain while bits [31:24] are associated with Standby domain. During Standby, bits [23:0] are unconditionally cleared. These events are all individually enabled and then ORed together to form the System Control Interrupt (SCI).

PM_GPE0_STS Register Map

31	30	29	28	27	26	25	24	23	22	21	20	19	18	17	16	15	14	13	12	11	10	9	8	7	6	5	4	3	2	1	0
GPIOM7_PME_FLAG	GPIOM6_PME_FLAG	RSVD								GPIOM5_PME_FLAG	GPIOM4_PME_FLAG	GPIOM3_PME_FLAG	GPIOM2_PME_FLAG	GPIOM1_PME_FLAG	GPIOM0_PME_FLAG	RSVD									USBC_PME_FLAG	RSVD	UART2_PME_FLAG	UART1_PME_FLAG	SMB_PME_FLAG	PIC_ASMI_PME_FLAG	PIC_IRQ_PME_FLAG

PM_GPE0_STS Bit Descriptions

Bit	Name	Description
31	GPIOM7_PME_FLAG	**GPIO IRQ/PME Mapper Bit 7 PME Flag**. If high, this bit records that a PME occurred via bit 7 of the GPIO IRQ/PME mapper. Both this bit and the corresponding enable bit in PM_GPE0_EN (ACPI I/O Offset 1Ch[31]) must be high in order for this PME to be passed on to the system. Write 1 to clear; writing 0 has no effect.
30	GPIOM6_PME_FLAG	**GPIO IRQ/PME Mapper Bit 6 PME Flag.** If high, this bit records that a PME occurred via bit 6 of the GPIO IRQ/PME mapper. Both this bit and the corresponding enable bit in PM_GPE0_EN (ACPI I/O Offset 1Ch[30]) must be high in order for this PME to be passed on to the system. Write 1 to clear; writing 0 has no effect.
29:22	RSVD	**Reserved.** Reads return 0; writes have no effect
21	GPIOM5_PME_FLAG	**GPIO IRQ/PME Mapper Bit 5 PME Flag.** If high, this bit records that a PME occurred via bit 5 of the GPIO IRQ/PME mapper. Both this bit and the corresponding enable bit in PM_GPE0_EN (ACPI I/O Offset 1Ch[21]) must be high in order for this PME to be passed on to the system. Write 1 to clear, writing 0 has no effect.
20	GPIOM4_PME_FLAG	**GPIO IRQ/PME Mapper Bit 4 PME Flag.** If high, this bit records that a PME occurred via bit 4 of the GPIO IRQ/PME mapper. Both this bit and the corresponding enable bit in PM_GPE0_EN (ACPI I/O Offset 1Ch[20]) must be high in order for this PME to be passed on to the system. Write 1 to clear; writing 0 has no effect.
19	GPIOM3_PME_FLAG	**GPIO IRQ/PME Mapper Bit 3 PME Flag.** If high, this bit records that a PME occurred via bit 3 of the GPIO IRQ/PME mapper. Both this bit and the corresponding enable bit in PM_GPE0_EN (ACPI I/O Offset 1Ch[19]) must be high in order for this PME to be passed on to the system. Write 1 to clear; writing 0 has no effect.
18	GPIOM2_PME_FLAG	**GPIO IRQ/PME Mapper Bit 2 PME Flag.** If high, this bit records that a PME occurred via bit 2 of the GPIO IRQ/PME mapper. Both this bit and the corresponding enable bit in PM_GPE0_EN (ACPI I/O Offset 1Ch[18]) must be high in order for this PME to be passed on to the system. Write 1 to clear; writing 0 has no effect.
17	GPIOM1_PME_FLAG	**GPIO IRQ/PME Mapper Bit 1 PME Flag.** If high, this bit records that a PME occurred via bit 1 of the GPIO IRQ/PME mapper. Both this bit and the corresponding enable bit in PM_GPE0_EN (ACPI I/O Offset 1Ch[17]) must be high in order for this PME to be passed on to the system. Write 1 to clear; writing 0 has no effect.

Downloaded from Arrow.com.

PM_GPE0_STS Bit Descriptions

Bit	Name	Description
16	GPIOM0_PME_ FLAG	**GPIO IRQ/PME Mapper Bit 0PME Flag.** If high, this bit records that a PME occurred via bit 0 of the GPIO IRQ/PME mapper. Both this bit and the corresponding enable bit in PM_GPE0_EN (ACPI I/O Offset 1Ch[16]) must be high in order for this PME to be passed on to the system. Write 1 to clear; writing 0 has no effect.
15:7	RSVD	**Reserved.** Reads return 0; writes have no effect.
6	USB_PME_ FLAG	**USB Controller PME Flag.** If high, this bit records that a PME occurred via USB Controller. Both this bit and the corresponding enable bit in PM_GPE0_EN (ACPI I/O Offset 1Ch[6]) must be high in order for this PME to be passed on to the system. Write 1 to clear; writing 0 has no effect.
5	RSVD	**Reserved.** Reads return 0; writes have no effect**.**
4	UART2_PME_ FLAG	**UART #2 PME Flag.** If high, this bit records that a PME occurred via UART #2. Both this bit and the corresponding enable bit in PM_GPE0_EN (ACPI I/O Offset 1Ch[4]) must be high in order for this PME to be passed on to the system. Write 1 to clear; writing 0 has no effect.
3	UART1_PME_ FLAG	**UART #1 PME Flag.** If high, this bit records that a PME occurred via UART #1. Both this bit and the corresponding enable bit in PM_GPE0_EN (ACPI I/O Offset 1Ch[3]) must be high in order for this PME to be passed on to the system. Write 1 to clear; writing 0 has no effect.
2	SMB_PME_ FLAG	**SMB PME Flag.** If high, this bit records that a PME occurred via the SMB. Both this bit and the corresponding enable bit in PM_GPE0_EN (ACPI I/O Offset 1Ch[2]) must be high in order for this PME to be passed on to the system. Write 1 to clear; writing 0 has no effect.
1	PIC_ASMI_PME_ FLAG	**PIC ASMI PME Flag.** If high, this bit records that a PME occurred due to a PIC ASMI. Both this bit and the corresponding enable bit in PM_GPE0_EN (ACPI I/O Offset 1Ch[1]) must be high in order for this PME to be passed on to the system. Write 1 to clear; writing 0 has no effect.
0	PIC_IRQ_PME_ FLAG	**PIC Interrupt PME Flag.** If high, this bit records that a PME occurred due to a PIC Interrupt. Both this bit and the corresponding enable bit in PM_GPE0_EN (ACPI I/O Offset 1Ch[0]) must be high in order for this PME to be passed on to the system. Write 1 to clear; writing 0 has no effect.

Downloaded from Arrow.com.

6.18.2.7 General Purpose Events Enable 0 (PM_GPE0_EN)

ACPI I/O Offset 1Ch
Type R/W
Reset Value 00000000h

PM_GPE0_EN is the Enable register for General Purpose Events. Reads always return the value written. By convention, bits [23:0] are associated with the Working domain while bits [31:24] are associated with the Standby domain. During Standby, bits [23:0] are unconditionally cleared. PME status can be read via the corresponding FLAG bit in the PM_GPE0_STS register (ACPI I/O Offset 18h).

PM_GPE0_EN Register Map

31	30	29	28	27	26	25	24	23	22	21	20	19	18	17	16	15	14	13	12	11	10	9	8	7	6	5	4	3	2	1	0
GPIOM7_PME_EN	GPIOM6_PME_EN	RSVD								GPIOM5_PME_EN	GPIOM4_PME_EN	GPIOM3_PME_EN	GPIOM2_PME_EN	GPIOM1_PME_EN	GPIOM0_PME_EN	RSVD									USBC_PME_EN	RSVD	UART2_PME_EN	UART1_PME_EN	SMB_PME_EN	PIC_ASMI_PME_EN	PIC_IRQ_PME_EN

PM_GPE0_EN Bit Descriptions

Bit	Name	Description
31	GPIOM7_PME_EN	**GPIO IRQ/PME Mapper Bit 7 PME Enable.** When set high, this bit enables the generation of a PME to the system if a PME occurs via bit 7 of the GPIO IRQ/PME mapper. Write this bit low to disable the generation of a PME from this source.
30	GPIOM6_PME_EN	**GPIO IRQ/PME Mapper Bit 6 PME Enable.** When set high, this bit enables the generation of a PME to the system if a PME occurs via bit 6 of the GPIO IRQ/PME mapper. Write this bit low to disable the generation of a PME from this source.
29:22	RSVD	**Reserved.** Reads return 0; writes have no effect
21	GPIOM5_PME_EN	**GPIO IRQ/PME Mapper Bit 5 PME Enable.** When set high, this bit enables the generation of a PME to the system if a PME occurs via bit 5 of the GPIO IRQ/PME mapper. Write this bit low to disable the generation of a PME from this source.
20	GPIOM4_PME_EN	**GPIO IRQ/PME Mapper Bit 4 PME Enable.** When set high, this bit enables the generation of a PME to the system if a PME occurs via bit 4 of the GPIO IRQ/PME mapper. Write this bit low to disable the generation of a PME from this source.
19	GPIOM3_PME_EN	**GPIO IRQ/PME Mapper Bit 3 PME Enable.** When set high, this bit enables the generation of a PME to the system if a PME occurs via bit 3 of the GPIO IRQ/PME mapper. Write this bit low to disable the generation of a PME from this source.
18	GPIOM2_PME_EN	**GPIO IRQ/PME Mapper Bit 2 PME Enable.** When set high, this bit enables the generation of a PME to the system if a PME occurs via bit 2 of the GPIO IRQ/PME mapper. Write this bit low to disable the generation of a PME from this source.
17	GPIOM1_PME_EN	**GPIO IRQ/PME Mapper Bit 1 PME Enable.** When set high, this bit enables the generation of a PME to the system if a PME occurs via bit 1 of the GPIO IRQ/PME mapper. Write this bit low to disable the generation of a PME from this source.
16	GPIOM0_PME_EN	**GPIO IRQ/PME Mapper Bit 0 PME Enable.** When set high, this bit enables the generation of a PME to the system if a PME occurs via bit 0 of the GPIO IRQ/PME mapper. Write this bit low to disable the generation of a PME from this source.
15:7	RSVD	**Reserved.** Reads return 0; writes have no effect
6	USB_PME_EN	**USB Controller PME Enable.** When set high, this bit enables the generation of a PME to the system if a PME occurs via USB Controller. Write this bit low to disable the generation of a PME from this source.
5	RSVD	**Reserved.**

Downloaded from Arrow.com.

PM_GPE0_EN Bit Descriptions (Continued)

Bit	Name	Description
4	UART2_PME_EN	**UART #2 PME Enable.** When set high, this bit enables the generation of a PME to the system if a PME occurs via UART #2. Write this bit low to disable the generation of a PME from this source.
3	UART1_PME_EN	**UART #1 PME Enable.** When set high, this bit enables the generation of a PME to the system if a PME occurs via UART #2. Write this bit low to disable the generation of a PME from this source.
2	SMB_PME_EN	**SMB PME Enable.** When set high, this bit enables the generation of a PME to the system if a PME occurs via the SMB. Write this bit low to disable the generation of a PME from this source.
1	PIC_ASMI_PME_EN	**PIC ASMI PME Enable.** When set high, this bit enables the generation of a PME to the system if a PME occurs due to a PIC ASMI. Write this bit low to disable the generation of a PME from this source.
0	PIC_IRQ_PME_EN	**PIC Interrupt PME Enable.** When set high, this bit enables the generation of a PME to the system if a PME occurs due to a PIC Interrupt. Write this bit low to disable the generation of a PME from this source

6.18.3 PM Support Registers

The registers listed in this sub-section are not ACPI registers, but are used to support power management implementation.

6.18.3.1 PM Sleep Start Delay (PM_SSD)

PMS I/O Offset 00h
Type R/W
Reset Value 0000h

PM_SSD Register Map

15	14	13	12	11	10	9	8	7	6	5	4	3	2	1	0
SLP_EN_INDIC	RSVD	SLP_WRT_EN	SLP_DELAY_EN	SLP_DELAY											

PM_SSD Bit Descriptions

Bit	Name	Description
15	SLP_EN_INDIC	**Sleep Enable Indicator.** If SLP_EN (ACPI I/O Offset 08h[13]) was written to a 1, then this bit reads high. If this bit is written to a 1, the Sleep sequence is aborted. Writing 0 to this bit has no effect. This bit always clears on a Sleep or Standby wakeup.
14	RSVD	**Reserved.** By convention write 0. Reads return value written.
13	SLP_WRT_EN	**Sleep Write Enable.** Must be high in order to change bits 12 and [11:0] (SLP_DELAY_EN and SLP_DELAY). Reads of this bit always return 0.
12	SLP_DELAY_EN	**Sleep Delay Enable.** Must be high to enable the delay specified in bits [11:0] (SLP_DELAY). Reads return value written.
11:0	SLP_DELAY	**Sleep Delay.** Indicates the number of 3.57954 MHz clock edges to wait before beginning the Sleep or Standby process as defined by SLP_EN (ACPI I/O Offset 08h[13]). Bit 12 (SLP_DELAY_EN) must be high to enable this delay. Reads return the value written.

Downloaded from Arrow.com.

6.18.3.2 PM Sleep Control X Assert Delay and Enable (PM_SCXA)

PMS I/O Offset 04h
Type R/W
Reset Value 00000000h

Reads always return the value written.

PM_SCXA Register Map

31	30	29	28	27	26	25	24	23	22	21	20	19	18	17	16	15	14	13	12	11	10	9	8	7	6	5	4	3	2	1	0
RSVD	SLPX_EN	SLPX_DELAY																													

PM_SCXA Bit Descriptions

Bit	Name	Description
31	RSVD	**Reserved.** By convention write 0, but may write anything.
30	SLPX_EN	**Sleep X Assert and Delay Enable.** Must be high to assert the SLEEP_X ball and to enable its assert delay specified in bits [29:0] (SLPX_DELAY).
29:0	SLPX_DELAY	**Sleep X Assert Delay.** Indicates the number of 3.57954 MHz clock edges to wait from the assertion of SUSPA# before asserting the SLEEP_X ball (C2). Bit 30 (SLPX_EN) must be high to enable this delay. SLEEP_X is not allowed to assert if this delay is larger than SLPCLK_DELAY (PMS I/O Offset 10h[29:0]). This is only true if SLPCLK_EN is enabled (PMS I/O Offset 10h[30] = 1).

6.18.3.3 PM Sleep Control Y Assert Delay and Enable (PM_SCYA)

PMS I/O Offset 08h
Type R/W
Reset Value 00000000h

Reads always return the value written.

PM_SCYA Register Map

31	30	29	28	27	26	25	24	23	22	21	20	19	18	17	16	15	14	13	12	11	10	9	8	7	6	5	4	3	2	1	0
RSVD	SLPY_EN	SLPY_DELAY																													

PM_SCYA Bit Descriptions

Bit	Name	Description
31	RSVD	**Reserved.** By convention write 0, but may write anything.
30	SLPY_EN	**Sleep Y Assert and Delay Enable.** Must be high to assert SLEEP_Y and enable its assert delay specified in bits [29:0] (SLPY_DELAY).
29:0	SLPY_DELAY	**Sleep Y Assert Delay.** Indicates the number of 3.57954 MHz clock edges to wait from the assertion of SUSPA# before asserting the SLEEP_Y ball (J3). Bit 30 (SLPY_EN) must be high to enable this delay. SLEEP_Y is not allowed to assert if this delay is larger than SLPCLK_DELAY (PMS I/O Offset 10h[29:0]). This is only true if SLPCLK_EN is enabled (PMS I/O Offset 10h[30] = 1).

Downloaded from Arrow.com.

6.18.3.4 PM Sleep Output Disable Assert Delay and Enable (PM_OUT_SLPCTL)

PMS I/O Offset 0Ch
Type R/W
Reset Value 00000000h

Reads always return the value written.

PM_OUT_SLPCTL Register Map

31	30	29	28	27	26	25	24	23	22	21	20	19	18	17	16	15	14	13	12	11	10	9	8	7	6	5	4	3	2	1	0
RSVD	PCI_IDE_OUT_SLP	PCI_IDE_OUT_SLP_DELAY																													

PM_OUT_SLPCTL Bit Descriptions

Bit	Name	Description
31	RSVD	**Reserved.** By convention write 0, but may write anything.
30	PCI_IDE_OUT_SLP	**PCI/IDE Output Sleep Control.** Allows the delay specified in bits [29:0] (PCI_IDE_OUT_SLP_DELAY) to turn off PCI/IDE outputs as listed in Table 4-11 "Sleep Driven PCI Signals" and Table 4-12 "Sleep Driven IDE Signals" on page 79. Individual enables exist for PCI (PCI GLD_MSR_PM, MSR 51000004h[49:48]) and IDE (IDE GLD_MSR_PM, MSR 51300004h[49:48]). Output sleep control immediately enables the PCI/IDE outputs when SUSP# de-asserts. 0: Disable. 1: Enable.
29:0	PCI_IDE_OUT_SLP_DELAY	**PCI/IDE Output Sleep Control Delay.** Indicates the number of 3.57954 MHz clock edges to wait from the assertion of SUSPA# before PCI/IDE outputs are disabled. Bit 30 (PCI_IDE_OUT_SLP) must be high to enable this delay. The PCI/IDE outputs will not turn off if this delay is larger than SLPCLK_DELAY (PMS I/O Offset 10h[29:0]). This is only true if SLPCLK_EN is enabled (PMS I/O Offset 10h[30] = 1).

Downloaded from Arrow.com.

6.18.3.5 PM Sleep Clock Delay and Enable (PM_SCLK)

PMS I/O Offset 10h
Type R/W
Reset Value 00000000h

Reads always return the value written.

PM_SCLK Register Map

31	30	29	28	27	26	25	24	23	22	21	20	19	18	17	16	15	14	13	12	11	10	9	8	7	6	5	4	3	2	1	0
RSVD	SLPCLK_EN	SLPCLK_DELAY																													

PM_SCLK Bit Descriptions

Bit	Name	Description
31	RSVD	**Reserved.** By convention write 0, but may write anything.
30	SLPCLK_EN	**Sleep Clock Delay Enable.** Must be high to assert SLP_CLK_EN# and enable its assert delay specified in bits [29:0] (SLPCLK_DELAY). Use of this control is required but not sufficient to enter the Standby state. **WARNING**: Using this control immediately turns off all system clocks except the 32 KHz RTC clock.
29:0	SLPCLK_DELAY	**Sleep Clock Assert Delay.** Indicates the number of 3.57954 MHz clock edges to wait from the assertion of SUSPA# before asserting SLP_CLK_EN#. Bit 30 (SLPCLK_EN) must be high to enable this delay. There is NOT a de-assert delay. The wakeup event causes SLP_CLK_EN# to de-assert combinatorially from the wakeup event. This event is called Sleep wakeup. The concept of a Sleep wakeup applies even if Sleep Clock is not used.

Downloaded from Arrow.com.

6.18.3.6 PM Sleep End Delay (PM_SED)

PMS I/O Offset 14h
Type R/W
Reset Value 00000000h

Reads always return the value written.

PM_SED Register Map

31	30	29	28	27	26	25	24	23	22	21	20	19	18	17	16	15	14	13	12	11	10	9	8	7	6	5	4	3	2	1	0
RSVD	SLPEND_EN	SLPEND_DELAY																													

PM_SED Bit Descriptions

Bit	Name	Description
31	RSVD	**Reserved.** By convention write 0, but may write anything.
30	SLPEND_EN	**Sleep End Delay Enable.** Must be high to enable the delay specified in bits [29:0] (SLPEND_DELAY).
29:0	SLPEND_DELAY	**Sleep End Delay.** Indicates the number of 3.57954 MHz clock edges to wait from Sleep wakeup before de-asserting SUSP#. Bit 30 (SLPEND_EN) must be high to enable this delay. If PCI_IDE_IN_SLP is not enabled (PMS I/O Offset 20h[30] = 0) or the delay is less than SLPEND_DELAY, SUSP# de-asserts at the same time the PCI/IDE inputs are re-enabled.

6.18.3.7 PM Sleep Control X De-assert Delay (PM_SCXD)

PMS I/O Offset 18h
Type R/W
Reset Value 00000000h

Reads always return the value written.

PM_SCXD Register Map

31	30	29	28	27	26	25	24	23	22	21	20	19	18	17	16	15	14	13	12	11	10	9	8	7	6	5	4	3	2	1	0
RSVD	SLPX_END_EN	SLPX_END_DELAY																													

PM_SCXD Bit Descriptions

Bit	Name	Description
31	RSVD	**Reserved.** By convention write 0, but may write anything.
30	SLPX_END_EN	**Sleep X De-assert and Delay Enable.** Must be high to de-assert SLEEP_X and enable the delay specified in bits [29:0] (SLPX_END_DELAY).

Downloaded from Arrow.com.

PM_SCXD Bit Descriptions (Continued)

Bit	Name	Description
29:0	SLPX_END_ DELAY	**Sleep X De-assert Delay.** Indicates the number of 3.57954 MHz clock edges to wait from Sleep wakeup before de-asserting the SLEEP_X ball (C2). Bit 30 (SLPX_END_EN) must be high to enable this delay. If PCI_IDE_IN_SLP is not enabled (PMS I/O Offset 20h[30] = 0) or is less than the SLPX_END_DELAY, SLEEP_X de-asserts at the same time the PCI/IDE inputs are re-enabled.

6.18.3.8 PM Sleep Control Y De-assert Delay (PM_SCYD)

PMS I/O Offset 1Ch
Type R/W
Reset Value 00000000h

Reads always return the value written.

PM_SCYD Register Map

31	30	29	28	27	26	25	24	23	22	21	20	19	18	17	16	15	14	13	12	11	10	9	8	7	6	5	4	3	2	1	0
RSVD	SLPY_END_EN	SLPY_END_DELAY																													

PM_SCYD Bit Descriptions

Bit	Name	Description
31	RSVD	**Reserved.** By convention write 0, but may write anything.
30	SLPY_END_EN	**Sleep Y De-assert and Delay Enable.** Must be high to de-assert SLEEP_Y and enable the delay specified in bits [29:0] (SLPY_END_DELAY).
29:0	SLPY_END_ DELAY	**Sleep Control Y De-assert Delay.** Indicates the number of 3.57954 MHz clock edges to wait from Sleep wakeup before de-asserting the SLEEP_Y ball (J3). Bit 30 (SLPY_END_EN) must be high to enable this delay. If PCI_IDE_IN_SLP is not enabled (PMS I/O Offset 20h[30] = 0) or is less than the SLPY_END_DELAY, SLEEP_Y de-asserts at the same time the PCI/IDE inputs are re-enabled.

Downloaded from Arrow.com.

6.18.3.9 PM PCI and IDE Input Sleep Control (PM_IN_SLPCTL)

PMS I/O Offset 20h
Type R/W
Reset Value 00000000h

Reads always return the value written.

PM_IN_SLPCTL Register Map

31	30	29	28	27	26	25	24	23	22	21	20	19	18	17	16	15	14	13	12	11	10	9	8	7	6	5	4	3	2	1	0
RSVD	PCI_IDE_IN_SLP	PCI_IDE_IN_SLP_DELAY																													

PM_IN_SLPCTL Bit Descriptions

Bit	Name	Description
31	RSVD	**Reserved.** By convention write 0, but may write anything.
30	PCI_IDE_IN_SLP	**PCI/IDE Input Sleep Control.** Allows the delay specified in bits [29:0] (PCI_IDE_IN_SLP_DELAY) to re-enable the PCI/IDE inputs as listed in Table 4-11 "Sleep Driven PCI Signals" and Table 4-12 "Sleep Driven IDE Signals" on page 79. Individual enables exist for PCI (PCI GLD_MSR_PM, MSR 51000004h[49:48]) and IDE (IDE GLD_MSR_PM, MSR 51300004h[49:48]). Input sleep control immediately turns off the PCI/IDE outputs when SUSPA# asserts. 0: Disable. 1: Enable.
29:0	PCI_IDE_IN_SLP _DELAY	**PCI/IDE Input Sleep Control Delay.** Indicates the number of 3.57954 MHz clock edges to wait from Sleep wakeup before PCI/IDE inputs are enabled. Bit 30 (PCI_IDE_IN_SLP) must be high to enable this delay.

6.18.3.10 PM Working De-assert Delay and Enable (PM_WKD)

PMS I/O Offset 30h
Type R/W
Reset Value 00000000h

Reads always return the value written, except for RSVD bits [29:20].

PM_WKD Register Map

31	30	29	28	27	26	25	24	23	22	21	20	19	18	17	16	15	14	13	12	11	10	9	8	7	6	5	4	3	2	1	0
RSVD	WORKING_DEASSERT_EN	RSVD										WORKING_DEASSERT_DELAY																			

Downloaded from Arrow.com.

PM_WKD Bit Descriptions

Bit	Name	Description
31	RSVD	**Reserved.** By convention write 0, but may write anything.
30	WORKING_ DEASSERT_EN	**Working De-assert and Delay Enable.** Must be high to de-assert the WORKING output and to enable its delay specified in bits [19:0] (WORKING_DEASSERT_DELAY). Use of this control implies a system sequence into the Standby state. The PMC disables its interfaces to non-Standby portions of the component and only considers wakeup events from Standby circuits. The PMC also immediately asserts system reset when SLP_CLK_EN# is asserted regardless of the value of WORKING_DEASSERT_DELAY (bits [19:0]). Reset remains asserted throughout the Standby state. There is NOT an assert delay. The wakeup event causes the WORKING output to assert. This event is called Standby wakeup. On wakeup, Reset will continue to be applied to all non-Standby circuits for the length of time specified in the RESET_DELAY (PMS I/O Offset 38h[19:0]). Enabling this function and/or the function in PM_WKXD (PMS I/O Offset 34h[30] = 1) causes the same Standby state events. Standby state is not entered unless SLP_CLK_EN# is asserted.
29:20	RSVD	**Reserved.** By convention write 0, but may write anything. Reads return 0.
19:0	WORKING_ DEASSERT_ DELAY	**Working De-assert Delay.** Indicates the number of 32 KHz clock edges to wait from the assertion of SLP_CLK_EN# before de-asserting the WORKING output. Bit 30 (WORKING_DEASSERT_EN) must be high to enable this delay.

6.18.3.11 PM Working Auxiliary De-assert Delay and Enable (PM_WKXD)

PMS I/O Offset 34h
Type R/W
Reset Value 00000000h

Reads always return the value written, except for RSVD bits [29:20].

PM_WKXD Register Map

31	30	29	28	27	26	25	24	23	22	21	20	19	18	17	16	15	14	13	12	11	10	9	8	7	6	5	4	3	2	1	0
RSVD	WORK_AUX_DEASSERT_EN	RSVD										WORK_AUX_DEASSERT_DELAY																			

Downloaded from Arrow.com.

PM_WKXD Bit Descriptions

Bit	Name	Description
31	RSVD	**Reserved.** By convention write 0, but may write anything.
30	WORK_AUX_ DEASSERT_EN	**Working Auxiliary De-assert and Delay Enable.** Must be high to de-assert the WORK_AUX output and enable its delay specified in bits [19:0] (WORK_AUX_DEASSERT_DELAY). Use of this control implies a system sequence into the Standby State. The PMC disables its interfaces to non-Standby portions of the component and only considers wakeup events from Standby circuits. The PMC also immediately asserts system reset when SLP_CLK_EN# is asserted regardless of the value of WORK_AUX_DEASSERT_DELAY (bits [19:0]). Reset remains asserted throughout the Standby state. There is NOT an assert delay. The wakeup event causes the WORK_AUX output to assert. This event is called Standby wakeup. On wakeup, Reset continues to be applied to all non-Standby circuits for the length of time specified in RESET_DELAY (PMS I/O Offset 38h[19:0]). Enabling this function and/or the function in PM_WKD (PMS I/O Offset 30h[30] = 1) causes the same Standby state events. Standby state is not entered unless SLP_CLK_EN# is asserted.
29:20	RSVD	**Reserved.** By convention write 0, but may write anything. Reads return 0.
19:0	WORK_AUX_ DEASSERT_ DELAY	**WORK_AUX De-assert Delay.** Indicates the number of 32 KHz clock edges to wait from the assertion of SLP_CLK_EN# before de-asserting the WORK_AUX output. Bit 30 (WORK_AUX_DEASSERT_EN) must be high to enable this delay.

6.18.3.12 PM De-assert Reset Delay from Standby (PM_RD)

PMS I/O Offset 38h
Type R/W
Reset Value 40000100h

Reads always return the value written, except for RSVD bits [29:20].

PM_RD Register Map

31	30	29	28	27	26	25	24	23	22	21	20	19	18	17	16	15	14	13	12	11	10	9	8	7	6	5	4	3	2	1	0
RESET_LOCK	RESET_EN	RSVD										RESET_DELAY																			

PM_RD Bit Descriptions

Bit	Name	Description
31	RESET_LOCK	**Reset Lock.** After this bit is set, the value in this register can not be changed until RESET_STAND# is applied.
30	RESET_EN	**Reset Delay Enable.** Must be high for the RESET_OUT# output de-assert delay specified in bits [19:0] (RESET_DELAY) to be applied. (Default = 1)
29:20	RSVD	**Reserved.** By convention write 0, but may write anything. Reads return 0.

Downloaded from Arrow.com.

PM_RD Bit Descriptions (Continued)

Bit	Name	Description
19:0	RESET_DELAY	**Reset De-assert Delay.** Indicates the number of 32 KHz clock edges to continue asserting RESET_OUT# from Standby Wakeup. Default value is 8 ms. This delay starts only if the RESET_WORK# input is de-asserted and the internal Low Voltage Detect circuit detects normal operating voltages on V_{CORE}. (Default = 00100h) (See Section 4.5 "Reset Considerations" on page 64 for further details regarding reset conditions.) Bit 30 (RESET_EN) must be high to enable this delay. Reset will be applied to the system for the longer of this value or until the internal Low Voltage Detect circuit detects normal operating voltages on V_{CORE}

6.18.3.13 PM Working Auxiliary Assert Delay from Standby Wakeup (PM_WKXA)

PMS I/O Offset 3Ch
Type R/W
Reset Value 00000000h

Reads always return the value written, except for RSVD bits [29:20].

PM_WKXA Register Map

31	30	29	28	27	26	25	24	23	22	21	20	19	18	17	16	15	14	13	12	11	10	9	8	7	6	5	4	3	2	1	0
WORK_AUX_LOCK	WORK_AUX_EN	RSVD										WORK_AUX_DELAY																			

PM_WKXA Bit Descriptions

Bit	Name	Description
31	WORK_AUX_ LOCK	**Working Auxiliary Lock.** After this bit is set, the value in this register can not be changed until RESET_STAND# is applied.
30	WORK_AUX_EN	**Working Auxiliary Delay Enable.** Must be high to enable the delay specified in bits [19:0] (WORK_AUX_DELAY). If this bit is low, the WORK_AUX output is unconditionally asserted at Standby wakeup. If WORK_AUX was not de-asserted going into Standby, then this control is a “don’t care”.
29:20	RSVD	**Reserved.** By convention write 0, but may write anything. Reads return 0.
19:0	WORK_AUX_ DELAY	**Working Auxiliary Assert Delay.** Indicates the number of 32 KHz clock edges to wait from Standby wakeup before asserting the WORK_AUX output. Bit 30 (WORK_AUX_EN) must be high to enable this delay. May be programmed to assert before or after RESET_OUT# de-asserts. The Standby wakeup event is not recognized until Normal (NWKD) or Abnormal (AWKD) to Work Delay expires, if those delays are enabled. (See PMS I/O Offset 4Ch and 50h for details regarding the NWKD and AWKD registers.)

Downloaded from Arrow.com.

6.18.3.14 PM Fail-Safe Delay and Enable (PM_FSD)

PMS I/O Offset 40h
Type R/W
Reset Value 00000000h

Reads always return the value written, except for RSVD bits [29:20].

PM_FSD Register Map

31	30	29	28	27	26	25	24	23	22	21	20	19	18	17	16	15	14	13	12	11	10	9	8	7	6	5	4	3	2	1	0
PWRBUT_LOCK	PWRBUT_EN	RSVD										PWRBUT_DELAY																			

PM_FSD Bit Descriptions

Bit	Name	Description
31	PWRBUT_LOCK	**Power Button Lock.** After this bit is set, the value in this register can not be changed until RESET_STAND# is applied.
30	PWRBUT_EN	**Power Button Enable.** Must be high to enable the fail-safe function.
29:20	RSVD	**Reserved.** By convention write 0, but may write anything. Reads return 0.
19:0	PWRBUT_DELAY	**Power Button Delay.** If the Power Button (PWR_BUT#) input signal is asserted for PWRBUT_DELAY number of 32 KHz clock edges, then unconditionally de-assert WORKING and WORK_AUX to remove Working power. If PWR_BUT# is still asserted at wakeup, hold in Standby state until de-asserted. PWR_BUT# needs to be asserted for at least one 32 KHz clock edge for this function to work properly. A less than one 32 KHz clock edge pulse on PWR_BUT# may not be registered. The delay restarts if PWR_BUT# de-asserts and then asserts again. If PWR_BUT# is already asserted, the delay restarts anytime PWRBUT_DELAY (this field) is written.

6.18.3.15 PM Thermal-Safe Delay and Enable (PM_TSD)

PMS I/O Offset 44h
Type R/W
Reset Value 00000000h

Reads always return the value written, except for RSVD bits [29:20].

PM_TSD Register Map

31	30	29	28	27	26	25	24	23	22	21	20	19	18	17	16	15	14	13	12	11	10	9	8	7	6	5	4	3	2	1	0
THRM_LOCK	THRM_EN	RSVD										THRM_DELAY																			

PM_TSD Bit Descriptions

Bit	Name	Description
31	THRM_LOCK	**Thermal Lock.** After this bit is set, the value in this register can not be changed until RESET_STAND# is applied.

Downloaded from Arrow.com.

PM_TSD Bit Descriptions (Continued)

Bit	Name	Description
30	THRM_EN	**Thermal Enable.** Must be high to enable the thermal alarm function.
29:20	RSVD	**Reserved.** By convention write 0, but may write anything. Reads return 0 value.
19:0	THRM_DELAY	**Thermal Delay.** If the Thermal Alarm (THRM_ALRM#) input signal is asserted for THRM_DELAY number of 32 KHz clock edges, then unconditionally de-assert WORKING and WORK_AUX to remove Working power. If THRM_ALRM# is still asserted at wakeup, hold in Standby state until THRM_ALRM# is de-asserted. THRM_ALRM# needs to be asserted for at least one 32 KHz clock edge for this function to work properly. A less than one 32 KHz clock edge pulse on THRM_ALRM# may not be registered. The delay restarts if THRM_ALRM# de-asserts and then asserts again. If THRM_ALRM# is asserted, the delay restarts anytime THRM_DELAY is written.

6.18.3.16 PM Power-Safe Delay and Enable (PM_PSD)

PMS I/O Offset 48h
Type R/W
Reset Value 00000000h

Reads always return the value written, except for RSVD bits [29:20].

PM_PSD Register Map

31	30	29	28	27	26	25	24	23	22	21	20	19	18	17	16	15	14	13	12	11	10	9	8	7	6	5	4	3	2	1	0
LOWBAT_LOCK	LOWBAT_EN	RSVD										LOWBAT_DELAY																			

PM_PSD Bit Descriptions

Bit	Name	Description
31	LOWBAT_LOCK	**Low Battery Lock.** After this bit is set, the value in this register can not be changed until RESET_STAND# is applied.
30	LOWBAT_EN	**Low Battery Enable.** Must be high to enable this function.
29:20	RSVD	**Reserved.** By convention write 0, but may write anything. Reads return 0.
19:0	LOWBAT_DELAY	**Low Battery Delay.** If the Low Battery input, LOW_BAT# (ball A9), is asserted for LOWBAT_DELAY number of 32 KHz clock edges, then unconditionally de-assert WORKING (ball C5) and WORK_AUX (ball C9) to remove Working power. If LOW_BAT# is still asserted at wakeup, hold in Standby state until LOW_BAT# is de-asserted. LOW_BAT# needs to be asserted for at least one 32 KHz clock edge for this function to work properly. A less than one 32 KHz clock edge pulse on the LOW_BAT# input may not be registered. The delay restarts if LOW_BAT# de-asserts and then asserts again. If LOW_BAT# is already asserted, the delay restarts anytime LOWBAT_DELAY is written.

Downloaded from Arrow.com.

6.18.3.17 PM Normal Work Delay and Enable (PM_NWKD)

PMS I/O Offset 4Ch
Type R/W
Reset Value 00000000h

Reads always return the value written, except for RSVD bits [29:20]. This register applies to Normal Standby state entry.

PM_NWKD Register Map

31	30	29	28	27	26	25	24	23	22	21	20	19	18	17	16	15	14	13	12	11	10	9	8	7	6	5	4	3	2	1	0
NWKD_LOCK	NWKD_EN	RSVD										NWKD_DELAY																			

PM_NWKD Bit Descriptions

Bit	Name	Description
31	NWKD_LOCK	**Normal Work Delay Lock.** After this bit is set, the value in this register can not be changed until RESET_STAND# is applied.
30	NWKD_EN	**Normal Work Delay Enable.** Must be high to enable this function.
29:20	RSVD	**Reserved.** By convention write 0, but may write anything. Reads return 0.
19:0	NWKD_DELAY	**Normal Work Delay.** If the Standby state is entered normally, NWKD_DELAY number of 32 KHz clock edges must pass before the Working state is allowed to be entered again, that is, a Standby Wakeup recognized.

6.18.3.18 PM Abnormal Work Delay and Enable (PM_AWKD)

PMS I/O Offset 50h
Type R/W
Reset Value 00000000h

Reads always return the value written, except for RSVD bits [29:20]. This register applies to Abnormal Standby state entry.

PM_AWKD Register Map

31	30	29	28	27	26	25	24	23	22	21	20	19	18	17	16	15	14	13	12	11	10	9	8	7	6	5	4	3	2	1	0
AWKD_LOCK	AWKD_EN	RSVD										AWKD_DELAY																			

PM_AWKD Bit Descriptions

Bit	Name	Description
31	AWKD_LOCK	**Abnormal Work Delay Lock.** After this bit is set, the value in this register can not be changed until RESET_STAND# is applied.
30	AWKD_EN	**Abnormal Work Delay Enable.** Must be high to enable this function.
29:20	RSVD	**Reserved.** By convention write 0, but may write anything. Reads return 0.
19:0	AWKD_DELAY	**Abnormal Work Delay.** If the standby state is entered abnormally, AWKD_DELAY number of 32 KHz clock edges must pass before the Working state is allowed to be entered again, that is, a Standby Wakeup recognized.

Downloaded from Arrow.com.

6.18.3.19 PM Standby Status and Control (PM_SSC)

PMS I/O Offset 54h
Type R/W
Reset Value 00000001h

PM_SSC Register Map

31	30	29	28	27	26	25	24	23	22	21	20	19	18	17	16	15	14	13	12	11	10	9	8	7	6	5	4	3	2	1	0
RSVD													PI	CLEAR_PI	SET_PI	RSVD			BADPACK_RST_FLAG	GLCP_SFT_RST_FLAG	WATCHDOG_RST_FLAG	SHTDWN_RST_FLAG	SFT_RST_FLAG	RSVD	HRD_RST_FLAG	LOWBAT_FLAG	THRM_FLAG	PWRBTN_FLAG	LVD_FLAG	NORM_FLAG	OFF_FLAG

PM_SSC Bit Descriptions

Bit	Name	Description
31:19	RSVD	**Reserved.** Reads return 0; writes are don't care.
18	PI (RO)	**Power Immediate (Read Only).** Reads return current value of Power Immediate bit.
17	CLEAR_PI	**Clear Power Immediate.** Write 1 to clear the read only Power Immediate bit (bit 18). Writing 0 has no effect. Reads return 0.
16	SET_PI	**Set Power Immediate.** Write 1 to set the read only Power Immediate bit (bit 18). Writing 0 has no effect. Reads return 0.
15:13	RSVD	**Reserved.** Reads return 0; writes are don't care.
12	BADPACK_ RST_FLAG	**Bad Packet Reset Flag.** If set, indicates that the last Standby state was entered from bad packet type reset. Returns to Working state when Abnormal Work Delay expires. (Note 1)
11	GLCP_SFT_ RST_FLAG	**GLCP Soft Reset Flag.** If set, indicates that the last Standby state was entered from a GLCP soft reset. Returns to Working State when Abnormal Work Delay expires. (Note 1)
10	WATCHDOG_ RST_FLAG	**Watchdog Reset Flag**. If set, indicates that the last Standby state was entered from a Watchdog reset. Returns to Working state when Abnormal Work Delay expires. (Note 1)
9	SHTDWN_RST_ FLAG	**Shutdown Reset Flag**. If set, indicates that the last Standby state was entered from shutdown reset. Returns to Working state when Abnormal Work Delay expires. (Note 1)
8	SFT_RST_ FLAG	**Soft Reset Flag.** If set, indicates that the last Standby state was entered from a software reset. Returns to Working state when Abnormal Work Delay expires. (Note 1)
7	RSVD	**Reserved.** Reads return 0; writes are don't care.
6	HRD_RST_FLAG	**Hard Reset Flag**. If set, indicates that the last Standby state was entered due to the unexpected assertion of Working reset. Returns to Working state when hard reset is de-asserted and Abnormal Work Delay expires. (Note 1)
5	LOWBAT_FLAG	**Low Battery Flag.** If set, indicates that the last Standby state was entered due to a low power shutdown. Returns to Working state due to default wakeup. (Note 1)
4	THRM_FLAG	**Thermal Flag.** If set, indicates that the last Standby state was entered due to a thermal shutdown. Returns to Working state due to default wakeup. (Note 1)
3	PWRBTN_FLAG	**Power Button Flag.** If set, indicates that the last Standby state was entered via a fail-safe power off sequence. User held down the power button. PM1_CNT was not used. Returns to Working state due to default wakeup. (Note 1)

Downloaded from Arrow.com.

PM_SSC Bit Descriptions (Continued)

Bit	Name	Description
2	LVD_FLAG	**Working Power Fail.** If set, indicates that the last Standby state was entered via an unexpected loss of Working power as detected with the on-chip Low Voltage Detect circuit. Returns to Working state due to default wakeup. (Note 1)
1	NORM_FLAG	**Normal Flag.** If set, indicates that the last Standby state was entered under program control through use of PM1_CNT. Returns to Working state due to programmed wakeup. See PM1_STS (ACPI I/O Offset 00h) and PM_GPE0_STS (ACPI I/O Offset 18h) for wakeup source. (Note 1)
0	OFF_FLAG	**Off Flag (No Previous).** If set, indicates that the circuits of the Standby power domain have been reset. Entry was from the Power Off state. Returns to Working state due to default wakeup. (Note 1)

Note 1. **Standby Status.** These bits are cleared each time the Power Management Logic enters the Standby state except for the bit that caused the entry. Write 1 to the bit to clear the bit; writing 0 has no effect. Bits [12:8,6] do not result in WORKING or WORK_AUX being de-asserted.

Downloaded from Arrow.com.

6.19 Flash Controller Register Descriptions

The registers for the Flash Controller are divided into three sets:

- Standard GeodeLink™ Device MSRs (Shared with DIVIL, see Section 6.6.1 on page 348.)
- Flash Controller Specific MSRs
- Flash Controller Native Registers

The MSRs are accessed via the RDMSR and WRMSR processor instructions. The MSR address is derived from the perspective of the CPU Core. See Section 4.2 "MSR Addressing" on page 60 for more details on MSR addressing.

All MSRs are 64 bits, however, the Flash Controller Specific MSRs (summarized in Table 6-72) are called out as 32 bits. The Flash Controller treats writes to the upper 32 bits (i.e., bits [63:32]) of the 64-bit MSRs as don't cares and always returns 0 on these bits.

The Native registers associated with the Flash Controller are NAND configuration registers, summarized in Table 6-73. The NAND native registers are 4-kbyte memory mapped or 16-byte I/O mapped. The base address is defined by LBAR in Diverse Device and can be located at any 4-kbyte boundaries if it is memory mapped, any 16-byte boundary if it is I/O mapped. The NAND Flash Controller is a 32-bit wide device present in Diverse Device without burst capability. To access the MSR registers in the NAND Flash Controller, a 32-bit wide bus is used as the LBus interface. For NAND Command/Address, data write and read modes, the NAND Flash Controller provides the valid data on the least significant nibbles of the LBus data ports.

There are no NOR control registers located in I/O or memory space. All NOR timing control functions are located in the Flash Specific MSRs. Additionally, the Diverse Device LBAR MSRs associates up to four chip selects for four Flash devices (see Section 6.6.2.8 "Local BAR - Flash Chip Select (DIVIL_LBAR_FLSH[x])" on page 362 bit details).

- MSR_LBAR_FLSH0 (MSR 51400010h) for use with FLASH_CS0#.
- MSR_LBAR_FLSH1 (MSR 51400011h) for use with FLASH_CS1#.
- MSR_LBAR_FLSH2 (MSR 51400012h) for use with FLASH_CS2#.
- MSR_LBAR_FLSH3 (MSR 51400013h) for use with FLASH_CS3#.

After the MSR setup is complete, a NOR Flash device can be associated with a block of system memory using up to 28 address bits (A[27:0]).

Table 6-72. Flash Controller Specific MSRs Summary

MSR Address	Type	Register Name	Reset Value	Reference
51400018h	R/W	NOR Flash Control (NORF_CTL)	00000000h	Page 550
51400019h	R/W	NOR Flash Timing for Chip Selects 0 and 1 (NORTF_T01)	07770777h	Page 552
5140001Ah	R/W	NOR Flash Timing for Chip Selects 2 and 3 (NORTF_T23)	07770777h	Page 553
5140001Bh	R/W	NAND Flash Data Timing MSR (NANDF_DATA)	07770777h	Page 553
5140001Ch	R/W	NAND Flash Control Timing (NANDF_CTL)	00000777h	Page 553
5140001Dh	R/W	Flash Reserved (NANDF_RSVD)	00000000h	Page 553

Downloaded from Arrow.com.

Table 6-73. Flash Controller Native Registers Summary

Flash Memory Offset	Flash I/O Offset	Type	Register Name	Reset Value	Reference
000h-7FFh	00h-03h	R/W	NAND Device Data (NAND_DATA)	Undefined	Page 556
Any Even Address between 800h-80Eh	04h	R/W	NAND Control Register (NAND_CTL)	01h	Page 556
Any Odd Address between 801h-80Fh	05h	R/W	NAND I/O (NAND_IO)	00h	Page 557
810h	06h	R/W	NAND Status (NAND_STS)	0xh	Page 557
815h	08h	R/W	NAND ECC Control (NAND_ECC_CTL)	04h	Page 558
811h	09h	R/W	NAND ECC LSB Line Parity (NAND_ECC_LSB)	FFh	Page 559
812h	0Ah	R/W	NAND ECC MSB Line Parity (NAND_ECC_MSB)	FFh	Page 559
813h	0Bh	R/W	NAND ECC Column Parity (NAND_ECC_COL)	FFh	Page 560
814h	0Ch	R/W	NAND Line Address Counter (NAND_LAC)	00h	Page 560
816h-FFFh	07h, 0Dh-0Fh	---	Reserved. Reads return 0. Writes have no effect.	---	---

6.19.1 Flash Controller Specific MSRs

6.19.1.1 NOR Flash Control (NORF_CTL)

MSR Address 51400018h
Type R/W
Reset Value 00000000h

NORF_CTL Register Map

31	30	29	28	27	26	25	24	23	22	21	20	19	18	17	16	15	14	13	12	11	10	9	8	7	6	5	4	3	2	1	0
RSVD																								CHK_IOCHRDY3	CHK_IOCHRDY2	CHK_IOCHRDY1	CHK_IOCHRDY0	WE_CS3	WE_CS2	WE_CS1	WE_CS0

Downloaded from Arrow.com.

NORF_CTL Bit Descriptions

Bit	Name	Description
31:8	RSVD	**Reserved**
7	CHK_IOCHRDY3 (Note 1)	**Check I/O Channel Ready 3.** Check FLASH_IOCHRDY signal for NOR Chip Select #3 (FLASH_CS3#) 0: Ignore IOCHRDY signal. No wait states are inserted. 1: Check IOCHRDY before finishing the chip select strobe pulse.
6	CHK_IOCHRDY2 (Note 1)	**Check I/O Channel Ready 2.** Check FLASH_IOCHRDY signal for NOR Chip Select #2 (FLASH_CS2#) 0: Ignore IOCHRDY signal. No wait states are inserted. 1: Check IOCHRDY before finishing the chip select strobe pulse.
5	CHK_IOCHRDY1 (Note 1)	**Check I/O Channel Ready 1.** Check FLASH_IOCHRDY signal for NOR Chip Select #1 (FLASH_CS1#) 0: Ignore IOCHRDY signal. No wait states are inserted. 1: Check IOCHRDY before finishing the chip select strobe pulse.
4	CHK_IOCHRDY0 (Note 1)	**Check I/O Channel Ready 0.** Check FLASH_IOCHRDY signal for NOR Chip Select #0 (FLASH_CS0#) 0: Ignore IOCHRDY signal. No wait states are inserted. 1: Check IOCHRDY before finishing the chip select strobe pulse.
3	WE_CS3	**Write Enable for CS3#.** Write Enable for NOR Chip Select #3 (FLASH_CS3#) 0: No write cycles go out to NOR Flash interface via CS3#. 1: Allow write cycles to go out to NOR Flash interface.
2	WE_CS2	**Write Enable for CS2#.** Write Enable for NOR Chip Select #2 (FLASH_CS2#) 0: No write cycles go out to NOR Flash interface via CS2#. 1: Allow write cycles to go out to NOR Flash interface.
1	WE_CS1	**Write Enable for CS1#.** Write Enable for NOR Chip Select #1 (FLASH_CS1#) 0: No write cycles go out to NOR Flash interface via CS1#. 1: Allow write cycles to go out to NOR Flash interface.
0	WE_CS0	**Write Enable for CS0#.** Write Enable for NOR Chip Select #0 (FLASH_CS0#) 0: No write cycles go out to NOR Flash interface via CS0#. 1: Allow write cycles to go out to NOR Flash interface.

Note 1. If any CHK_IOCHRDY[x] bit (bits [7:4]) is high, and the corresponding Chip Select (FLASH_CS[x]#) is low, then signal FLASH_IOCHRDY is checked to determine when to de-assert the RE# or WE# strobe. The RE# or WE# strobe pulse width will be the programmed value (MSR_NORTF_T01[22:20], MSR_NORTF_T01[6:4], MSR_NORTF_T23[22:20] and MSR_NORTF_T23[6:4]) increased by at least two local bus clock (33 MHz) cycles. If no CHK_IOCHRDY[x] bit (bits [7:4]) is high, or if no CHK_IORDY[x] bit is high that has a corresponding active (low) Chip Select (FLASH_CS[x]#), then signal FLASH_IOCHRDY is ignored and the NOR Controller's WE# and RE# strobe pulse widths will be the values programmed in the NOR MSR registers (MSR_NORTF_T01[22:20], MSR_NORTF_T01[6:4], MSR_NORTF_T23[22:20] and MSR_NORTF_T23[6:4]). In this case, if the pulse width of WE# and RE# in the NOR MSR registers is programmed as 0, then the NOR Controller's WE# and RE# generation will use 16 as the count value of NOR pulse width.

Downloaded from Arrow.com.

6.19.1.2 NOR Flash Timing MSRs

The NOR Flash controller is used for NOR Flash or GPCS. The timing is different from device to device, so separate timing registers are used for each device.

NOR Flash Timing for Chip Selects 0 and 1 (NORTF_T01)

MSR Address 51400019h
Type R/W
Reset Value 07770777h

NORTF_T01 Register Map

31	30	29	28	27	26	25	24	23	22	21	20	19	18	17	16	15	14	13	12	11	10	9	8	7	6	5	4	3	2	1	0
RSVD					tH1			RSVD	tP1			RSVD	tS1			RSVD					tH0			RSVD	tP0			RSVD	tS0		

NORTF_T01 Bit Descriptions

Bit	Name	Description
31:27	RSVD	**Reserved.** Reads return value written.
26:24	tH1 (Note 1)	**Hold Time for NOR Chip Select 1.** Hold from WE# or RE# rising edge to chip select. Refer to Figure 5-57 "NOR Flash with Wait States Timing" on page 185.
23	RSVD	**Reserved.** Reads return value written
22:20	tP1	**Strobe Pulse Width for NOR Chip Select 1.** RE# and WE# strobe pulse width. At the end of the Tp, sample the IOCHRDY pin to see if a wait state is needed. Refer to Figure 5-57 "NOR Flash with Wait States Timing" on page 185.
19	RSVD	**Reserved.** Reads return value written.
18:16	tS1 (Note 1)	**Setup Time for NOR Chip Select 1.** Chip select to WE# or RE# falling edge setup time. Refer to Figure 5-57 "NOR Flash with Wait States Timing" on page 185.
15:11	RSVD	**Reserved.** Reads return value written.
10:8	tH0 (Note 1)	**Hold time for NOR Chip Select 0.** Hold from WE# or RE# rising edge to chip select. Refer to Figure 5-57 "NOR Flash with Wait States Timing" on page 185.
7	RSVD	**Reserved.** Reads return value written.
6:4	tP0	**Strobe Pulse Width for NOR Chip Select 0.** RE# and WE# strobe pulse width. At the end of the Tp, sample the IOCHRDY pin to see if a wait state is needed. Refer to Figure 5-57 "NOR Flash with Wait States Timing" on page 185.
3	RSVD	**Reserved.** Reads return value written.
2:0	tS0 (Note 1)	**Setup Time for NOR Chip Select 0.** Chip select to WE# or RE# falling edge setup time. Refer to Figure 5-57 "NOR Flash with Wait States Timing" on page 185.

Note 1. The valid range for the count values of setup time, and hold time in NOR MSR registers is 1 through 7 (Local Bus clock cycles or LPC clock cycles) when a General Purpose device is used (with NOR Controller). If signal FLASH_IOCHRDY is not used by the General Purpose device, then the valid range for the count value of pulse width in NOR MSR registers is 1 through 7 (Local Bus clock cycles or LPC clock cycles). If FLASH_IOCHRDY is used by the General Purpose device, then the valid range for the count value of pulse width in NOR MSR registers is 2 through 7 (Local Bus clock cycles or LPC clock cycles). In the case of NOR devices, as NOR Controller doesn't support the use of FLASH_IOCHRDY (explained in Section 5.18.2 "NOR Flash Controller/General Purpose Chip Select" on page 183),the valid range for the count values of setup time, pulse width, and hold time in NOR MSR registers is 1 through 7 (Local Bus clock cycles or LPC clock cycles).In the case of NOR Controller's WE# and RE# strobe pulse widths, if NOR Control MSR register bits[7:4] (CHKRDY[3:0]) are enabled (active high) in the case of General Purpose devices then the generated pulse widths will be longer than programmed count value. If setup or hold time in NOR MSR registers is programmed as 0, then the NOR Controller's WE# and RE# generation will use 16 as the count value of NOR setup or hold time.

Downloaded from Arrow.com.

NOR Flash Timing for Chip Selects 2 and 3 (NORTF_T23)

MSR Address 5140001Ah
Type R/W
Reset Value 07770777h

NORTF_T23 Register Map

31	30	29	28	27	26	25	24	23	22	21	20	19	18	17	16	15	14	13	12	11	10	9	8	7	6	5	4	3	2	1	0
RSVD					tH3			RSVD	tP3			RSVD	tS3			RSVD					tH2			RSVD	tP2			RSVD	tS2		

NORTF_T23 Bit Descriptions

Bit	Name	Description
31:27	RSVD	**Reserved.** Reads return value written.
26:24	tH3 (Note 1)	**Hold Time for NOR Chip Select 3.** Hold from WE# or RE# rising edge to chip select. Refer to Figure 5-57 "NOR Flash with Wait States Timing" on page 185.
23	RSVD	**Reserved.** Reads return value written.
22:20	tP3	**Strobe Pulse Width for NOR Chip Select 3.** RE# and WE# strobe pulse width. At the end of the tP, sample the FLASH_ IOCHRDY signal to see if a wait state is needed. Refer to Figure 5-57 "NOR Flash with Wait States Timing" on page 185.
19	RSVD	**Reserved.** Reads return value written.
18:16	tS3 (Note 1)	**Setup Time for NOR Chip Select 3.** Chip select to WE# or RE# falling edge setup time. Refer to Figure 5-57 "NOR Flash with Wait States Timing" on page 185.
15:11	RSVD	**Reserved.** Reads return value written**.**
10:8	tH2 (Note 1)	**Hold Time for NOR Chip Select 2.** Hold from WE# or RE# rising edge to chip select. Refer to Figure 5-57.
7	RSVD	**Reserved.** Reads return value written.
6:4	tP2	**Strobe Pulse Width for NOR Chip Select 2.** RE# and WE# strobe pulse width. At the end of the tP, sample the FLASH_IOCHRDY signal to see if a wait state is needed. Refer to Figure 5-57 "NOR Flash with Wait States Timing" on page 185.
3	RSVD	**Reserved.** Reads return value written.
2:0	tS2 (Note 1)	**Setup Time for NOR Chip Select 2.** Chip select to WE# or RE# falling edge setup time. Refer to Figure 5-57 "NOR Flash with Wait States Timing" on page 185.

Note 1. The valid range for the count values of setup time, and hold time in NOR MSR registers is 1 through 7 when a General Purpose device is used (with NOR Controller). If signal FLASH_IOCHRDY is not used by the General Purpose device, then the valid range for the count value of pulse width in NOR MSR registers is 1 through 7. If FLASH_IOCHRDY is used by the General Purpose device, then the valid range for the count value of pulse width in NOR MSR registers is 2 through 7. In the case of NOR devices, as NOR Controller doesn't support the use of FLASH_IOCHRDY (explained in Section 5.18.2 "NOR Flash Controller/General Purpose Chip Select" on page 183),the valid range for the count values of setup time, pulse width, and hold time in NOR MSR registers is 1 through 7.In the case of NOR Controller's WE# and RE# strobe pulse widths, if NOR Control MSR register bits[7:4] (CHKRDY[3:0]) are enabled (active high) in the case of General Purpose devices then the generated pulse widths will be longer than programmed count value. If setup or hold time in NOR MSR registers is programmed as 0, then the NOR Controller's WE# and RE# generation will use 16 as the count value of NOR setup or hold time.

Downloaded from Arrow.com.

6.19.1.3 NAND Flash Data Timing MSR (NANDF_DATA)

MSR Address 5140001Bh
Type R/W
Reset Value 07770777h

Most NAND devices have similar timing. All NAND devices share the timing registers. The valid range for the count values of setup time and hold time in NAND MSRs is 0 through 7 Local Bus clock ('lb_c') cycles or LPC clock ('lpc_c') cycles and the valid range for the count values of pulse width in NAND MSRs is 1 through 7 Local Bus clock ('lb_c') cycles or LPC clock ('lpc_c') cycles.

NANDF_DATA Register Map

31	30	29	28	27	26	25	24	23	22	21	20	19	18	17	16	15	14	13	12	11	10	9	8	7	6	5	4	3	2	1	0
RSVD					tRH			RSVD	tRP			RSVD	tRS			RSVD					tWH			RSVD	tWP			RSVD	tWS		

NANDF_DATA Bit Descriptions

Bit	Name	Description
31:27	RSVD	**Reserved.** Reads return value written.
26:24	tRH	**Data Read Hold Time.** This timing is just for internal state machine; no external reference point. Can be set to 0 if the hold time is not needed. Range = 0h to 7h. Refer to Figure 5-60 "NAND Data Timing with Wait States" on page 187.
23	RSVD	**Reserved.** Reads return value written.
22:20	tRP	**Data Read Pulse Width.** The RE# active pulse width in data read phase. Range = 1h to 7h. Refer to Figure 5-60 "NAND Data Timing with Wait States" on page 187.
19	RSVD	**Reserved.** Reads return value written.
18:16	tRS	**Data Read Setup Time.** This timing is just for internal state machine; no external reference point. Can be set to 0 if the setup time is not needed. Range = 0h to 7h. Refer to Figure 5-60 "NAND Data Timing with Wait States" on page 187.
15:11	RSVD	**Reserved.** Reads return value written.
10:8	tWH	**Data Write Hold Time.** The hold time from WE# rising edge to I/O bus is turned off. Range = 0h to 7h. Refer to Figure 5-60 "NAND Data Timing with Wait States" on page 187.
7	RSVD	**Reserved.** Reads return value written.
6:4	tWP	**Data Write Pulse Width.** The WE# active pulse width in data write phase. Note that the data byte is put on the I/O bus at the same time the WE# is asserted. Range = 1h to 7h. Refer to Figure 5-60 "NAND Data Timing with Wait States" on page 187.
3	RSVD	**Reserved.** Reads return value written.
2:0	tWS	**Data Write Setup Time.** This timing is just for internal state machine; no external reference point. Can be set to 0 if the setup time is not needed. Range = 0h to 7h. Refer to Figure 5-60 "NAND Data Timing with Wait States" on page 187.

Downloaded from Arrow.com.

6.19.1.4 NAND Flash Control Timing (NANDF_CTL)

MSR Address 5140001Ch
Type R/W
Reset Value 00000777h

NANDF_CTL Register Map

31	30	29	28	27	26	25	24	23	22	21	20	19	18	17	16	15	14	13	12	11	10	9	8	7	6	5	4	3	2	1	0
RSVD																					tCH			RSVD	tCP			RSVD	tCS		

NANDF_CTL Bit Descriptions

Bit	Name	Description
31:11	RSVD	**Reserved.** Reads return value written.
10:8	tCH	**Control Hold Time.** The hold time from the rising edge of WE# to the toggle of control signals. Note that the I/O bus is turned off when the tCH expires. Range = 0h to 7h. Refer to Figure 5-58 "NAND Flash Command/Address Timing" on page 186.
7	RSVD	**Reserved.** Reads return value written.
6:4	tCP	**Control Pulse Width.** The WE# active pulse width in command/address phase. Note that the command/address byte is put on the I/O bus at the same time that the WE# is asserted. Range = 1h to 7h. Refer to Figure 5-58 "NAND Flash Command/Address Timing" on page 186.
3	RSVD	**Reserved.** Reads return value written.
2:0	tCS	**Control Setup Time.** The setup time from the toggle of the control signals to the WE# falling edge. Range = 0h to 7h. Refer to Figure 5-58 "NAND Flash Command/Address Timing" on page 186.

6.19.1.5 Flash Reserved (NANDF_RSVD)

MSR Address 5140001Dh
Type R/W
Reset Value 00000000h

This register is reserved. Reads return 0. Writes have no effect.

Downloaded from Arrow.com.

6.19.2 Flash Controller Native Registers

6.19.2.1 NAND Device Data (NAND_DATA)

Flash Memory Offset 000h-7FFh
Flash I/O Offset 00h-03h
Type R/W
Reset Value Undefined

Reading or writing to this range accesses the same NAND Device Data.

NAND_DATA Register Map

7	6	5	4	3	2	1	0
DATA							

NAND_DATA Bit Descriptions

Bit	Name	Description
7:0	DATA	**NAND Device Data.** No default value. This address space is not to be read from until data is read from the NAND Flash device. The system will hang if a read is done from this address space without a prior read from NAND Flash device.

6.19.2.2 NAND Control Register (NAND_CTL)

Flash Memory Offset Any Even Address between 800h-80Eh
Flash I/O Offset 04h
Type R/W
Reset Value 01h

NAND_CTL Register Map

7	6	5	4	3	2	1	0
RSVD			DIST_EN	RDY_INT_MASK	ALE	CLE	CE#

NAND_CTL Bit Descriptions

Bit	Name	Description
7:5	RSVD (RO)	**Reserved (Read Only).** Returns 0 when read.
4	DIST_EN	**NAND Distract Interrupt Enable.** 0: Disables the generation of NAND Distract Interrupt. 1: Enables the generation of NAND Distract Interrupt.
3	RDY_INT_MASK	**NAND Ready Interrupt Mask.** 0: Interrupt is masked. 1: Enable NAND Flash device's RDY/BUSY# signal to generate an interrupt.
2	ALE	**Address Latch Enable.** FLASH_ALE output signal reflects the value of this bit.
1	CLE	**Command Latch Enable.** FLASH_CLE output signal reflects the value of this bit.
0	CE#	**Chip Enable.** CE# signal reflects the value of this bit. The NAND_CS signals from the Diverse Device determine which CE# is asserted. Keep this bit low during entire NAND cycle. Writing a 1 to this bit resets the NAND controller.

Downloaded from Arrow.com.

6.19.2.3 NAND I/O (NAND_IO)

Flash Memory Offset Any Odd Address between 801h-80Fh
Flash I/O Offset 05h
Type R/W
Reset Value 00h

NAND_IO Register Map

7	6	5	4	3	2	1	0
IO							

NAND_IO Bit Descriptions

Bit	Name	Description
7:0	IO	**I/O Register.** Writing to this register triggers a command/address phase sub-cycle on the NAND Flash interface. The data written to this register is put on the I/O bus during the sub-cycle. It returns previous written value when read. **Note:** Before writing to this register check for CTLR_BUSY bit (Flash Memory Offset 810h[2]/Flash I/O Offset 06h[2]) in NAND_STS register to be 0.

6.19.2.4 NAND Status (NAND_STS)

Flash Memory Offset 810h
Flash I/O Offset 06h
Type R/W
Reset Value 0xh

NAND_STS Register Map

7	6	5	4	3	2	1	0
RSVD				FLASH_RDY	CTLR_BUSY	CMD_COMP	DIST_ST

NAND_STS Bit Descriptions

Bit	Name	Description
7:4	RSVD (RO)	**Reserved (Read Only).** Returns 0 when read.
3	FLASH_RDY (RO)	**Flash Ready (Read Only).** Double synchronized output (with respect to local bus clock) of the NAND Flash device's RDY/BUSY#.
2	CTLR_BUSY (RO)	**NAND Controller Busy (Read Only).** When high, indicates that the NAND Controller's state machines are busy.
1	CMD_COMP	**NAND Command Complete.** When high, indicates that the most recent NAND command has completed. May be read anytime. Write 1 to clear this bit. Writing 0 has no effect.
0	DIST_ST	**NAND Distract Status.** Occurrence of a NOR interruption during a NAND transaction sets this bit. Write 1 to clear this bit. Writing 0 has no effect. A NAND transaction is started as soon as CE# goes low. It is stopped when CE# goes high. Typically, a NAND transaction needs multiple software commands (from 6 to ~500). Since the Flash Interface is shared between NAND and NOR Flash Controllers and the NOR Flash Controller gets priority to use the Flash Interface, a NAND transaction may be interrupted by a NOR transaction. DIST_ST bit is set to record this event. NAND Flash software must take necessary actions to recover the uncompleted transaction.

Downloaded from Arrow.com.

6.19.2.5 NAND ECC Control (NAND_ECC_CTL)

Flash Memory Offset 815h
Flash I/O Offset 08h
Type R/W
Reset Value 04h

NAND_ECC_CTL Register Map

7	6	5	4	3	2	1	0
RSVD					PARITY	CLRECC	ENECC

NAND_ECC_CTL Bit Descriptions

Bit	Name	Description
7:3	RSVD	**Reserved.** Reads return value written**.**
2	PARITY	**Parity.** 0: ECC Parity registers are even parity. 1: ECC Parity registers are odd parity. In the case of odd ECC parity, the value read from NAND_ECC_LSB (Flash Memory Offset 811h/Flash I/O Offset 09h), NAND_ECC_MSB (Flash Memory Offset 812h/Flash I/O Offset 0Ah), and NAND_ECC_COL (Flash Memory Offset 813h/Flash I/O Offset 0Bh) parity registers will be complement of the value written into these registers (except for LSB two bits of the NAND_ECC_COL register, they are always 11 for odd parity).
1	CLRECC	**Clear ECC Engine.** Write 1 to clear ECC parity registers (NAND_ECC_LSB, NAND_ECC_MSB, and NAND_ECC_COL), NAND Line Address Counter register (NAND_LAC) and reset the ECC engine. Writing 0 has no effect. The ECC engine contains an 8-bit Line Address Counter (LAC) to keep track of data that has been read from or written into the NAND Flash. Software has to reset the counter by writing a 1 to the CLRECC bit before transferring data to/from the NAND Flash. Every data byte transferred to/from the NAND Flash Controller increments the LAC. The NAND_LAC (Flash Memory Offset 814h/Flash I/O Offset 0Ch) register reports the current count of the LAC.
0	ENECC	**Enable ECC Calculation Engine.** 0: Disable ECC Engine. ECC engine holds previous value. 1: Enable ECC Engine. Every data byte transferred to/from the NAND Flash Controller will be counted in ECC calculation.

Downloaded from Arrow.com.

6.19.2.6 NAND ECC Parity Registers

ECC parity registers contain 22 parity bits. The bit location and definition follows the SmartMedia Physical Format Specifications.

NAND ECC LSB Line Parity (NAND_ECC_LSB)

Flash Memory Offset 811h
Flash I/O Offset 09h
Type R/W
Reset Value FFh

NAND_ECC_LSB Register Map

7	6	5	4	3	2	1	0
LP[7:0]							

NAND_ECC_LSB Bit Descriptions

Bit	Name	Description
7:0	LP[7:0]	**Line Parity Bits 7 through 0.**

NAND ECC MSB Line Parity (NAND_ECC_MSB)

Flash Memory Offset 812h
Flash I/O Offset 0Ah
Type R/W
Reset Value FFh

NAND_ECC_MSB Register Map

7	6	5	4	3	2	1	0
LP[15:8]							

NAND_ECC_MSB Bit Descriptions

Bit	Name	Description
7:0	LP[15:8]	**Line Parity Bits 15 through 8.**

Downloaded from Arrow.com.

NAND ECC Column Parity (NAND_ECC_COL)

Flash Memory Offset 813h
Flash I/O Offset 0Bh
Type R/W
Reset Value FFh

NAND_ECC_COL Register Map

7	6	5	4	3	2	1	0
CP[5:0]						RSVD	

NAND_ECC_COL Bit Descriptions

Bit	Name	Description
7:2	CP[5:0]	**Column Parity Bits 5 through 0.**
1:0	RSVD (RO)	**Reserved.** Always returns 11 for odd ECC parity and 00 for even ECC parity.

6.19.2.7 NAND Line Address Counter (NAND_LAC)

Flash Memory Offset 814h
Flash I/O Offset 0Ch
Type R/W
Reset Value 00h

NAND_LAC Register Map

7	6	5	4	3	2	1	0
LAC							

NAND_LAC Bit Descriptions

Bit	Name	Description
7:0	LAC	**Line Address Counter Value.** The ECC engine contains an 8-bit Line Address Counter (LAC) to keep track of data that has been read from or written into the NAND Flash. Software has to reset the counter by writing a 1 to the CLRECC bit (Flash Memory Offset 815h[1]/Flash I/O Offset 08h[1]) before transferring data to/from the NAND Flash. Every data byte exchanged between NAND Flash controller and GeodeLink Adapter increments the LAC. The NAND_LAC register reports the current count of the LAC.

Downloaded from Arrow.com.

6.20 GeodeLink™ Control Processor Register Descriptions

The GeodeLink Control Processor's (GLPC) register set consists of:

- Standard GeodeLink™ Device (GLD) MSRs
- GLCP Specific MSRs

The MSRs (both Standard and GLPC Specific) are accessed via the RDMSR and WRMSR processor instructions. The MSR address is derived from the perspective of the CPU Core. See Section 4.2 "MSR Addressing" on page 60 for more details on MSR addressing.

The tables that follow are register summary tables that include reset values and page references where the bit descriptions are provided.

Table 6-74. Standard GeodeLink™ Device MSRs Summary

MSR Address	Type	Register	Reset Value	Reference
51700000h	RO	GLD Capabilities MSR (GLCP_GLD_MSR_CAP)	00000000_005025xxh	Page 562
51700001h	R/W	GLD Master Configuration MSR (GLCP_GLD_MSR_CONFIG)	00000000_00000000h	Page 562
51700002h	R/W	GLD SMI MSR (GLCP_GLD_MSR_SMI)	00000000_00000003h	Page 563
51700003h	R/W	GLD Error MSR (GLCP_GLD_MSR_ERROR)	00000000_00000000h	Page 564
51700004h	R/W	GLD Power Management MSR (GLCP_GLD_MSR_PM)	00000000_00000000h	Page 565
51700005h	R/W	GLD Diagnostic MSR (GLCP_GLD_MSR_DIAG)	00000000_00000000h	Page 565

Table 6-75. GLPC Specific MSRs Summary

MSR Address	Type	Register	Reset Value	Reference
51700008h	R/W	GLCP Clock Disable Delay Value (GLCP_CLK_DIS_DELAY)	00000000_00000000h	Page 568
51700009h	R/W	GLCP Clock Mask for Sleep Request (GLCP_PMCLKDISABLE)	00000000_00000000h	Page 568
5170000Bh	R/W	GLCP Global Power Management Control (GLCP_GLB_PM)	00000000_00000000h	Page 569
5170000Ch	R/W	GLCP Debug Output from Chip (GLCP_DBGOUT)	00000000_00000000h	Page 569
5170000Dh	R/W	Reserved Registers (GLPC_RSVD)	00000000_00000000h	---
5170000Eh	R/W	Software Communication Register (GLCP_DOWSER)	00000000_00000000h	Page 570
5170000Fh	R/W	GLCP Reserved Register (GLPC_RSVD)	00000000_00000000h	---
51700010h	R/W	GLCP Clock Control (GLCP_CLKOFF)	00000000_00000000h	Page 570
51700011h	RO	GLCP Clock Active (GLCP_CLKACTIVE)	0000xxxx_xxxxxxxxh	Page 570
51700012h	R/W	GLCP Clock Mask for Debug Clock Stop Action (GLCP_CLKDISABLE)	00000000_00000000h	Page 571
51700013h	R/W	GLCP Clock Active Mask for Suspend Acknowledge (GLCP_CLK4ACK)	00000000_00000000h	Page 571
51700014h	R/W	GLCP System Reset Control (GLCP_SYS_RST)	00000000_00000000h	Page 573
51700015h	R/W	Reserved Registers (GLPC_RSVD)	00000000_00000000h	---
51700016h	R/W	GLCP Debug Clock Control (GLCP_DBGCLKCTL)	00000000_00000002h	Page 573
51700017h	RO	Chip Revision ID (GLCP_CHIP_REV_ID)	00000000_000000xxh	Page 574

Downloaded from Arrow.com.

Table 6-75. GLPC Specific MSRs Summary (Continued)

MSR Address	Type	Register	Reset Value	Reference
51700018h-517000FFh	R/W	Reserved Registers (GLPC_RSVD) - Reserved for internal testing. Do not write to these registers.	xxxxxxxx_xxxxxxxxh	---

6.20.1 Standard GeodeLink™ Device (GLD) MSRs

6.20.1.1 GLD Capabilities MSR (GLCP_GLD_MSR_CAP)

MSR Address 51700000h
Type RO
Reset Value 00000000_005025xxh

GLCP_GLD_MSR_CAP Register Map

63	62	61	60	59	58	57	56	55	54	53	52	51	50	49	48	47	46	45	44	43	42	41	40	39	38	37	36	35	34	33	32
RSVD																															
31	30	29	28	27	26	25	24	23	22	21	20	19	18	17	16	15	14	13	12	11	10	9	8	7	6	5	4	3	2	1	0
RSVD								DEVID																REVID							

GLCP_GLD_MSR_CAP Bit Descriptions

Bit	Name	Description
63:24	RSVD	**Reserved.** Reads as 0.
23:8	DEV_ID	**Device ID.** Identifies module
7:0	REV_ID	**Revision ID.** Identifies module revision. See *AMD Geode™ CS5536 Companion Device Specification Update* document for value.

6.20.1.2 GLD Master Configuration MSR (GLCP_GLD_MSR_CONFIG)

MSR Address 51700001h
Type R/W
Reset Value 00000000_00000000h

GLCP_GLD_MSR_CONFIG Register Map

63	62	61	60	59	58	57	56	55	54	53	52	51	50	49	48	47	46	45	44	43	42	41	40	39	38	37	36	35	34	33	32
RSVD																															
31	30	29	28	27	26	25	24	23	22	21	20	19	18	17	16	15	14	13	12	11	10	9	8	7	6	5	4	3	2	1	0
RSVD																													PID		

GLCP_GLD_MSR_CONFIG Bit Descriptions

Bit	Name	Description
63:3	RSVD	**Reserved.** Always write 0.
2:0	PID	**Priority ID.** Always write 0.

Downloaded from Arrow.com.

6.20.1.3 GLD SMI MSR (GLCP_GLD_MSR_SMI)

MSR Address 51700002h
Type R/W
Reset Value 00000000_00000003h

The flags are set by internal conditions. The internal conditions are enabled if the EN bit is 0. Reading the FLAG bit returns the value; writing 1 clears the flag; writing 0 has no effect. (See Section 4.7.3 "MSR Address 2: SMI Control" on page 74 for further SMI/ASMI generation details.)

GLCP_GLD_MSR_SMI Register Map

63	62	61	60	59	58	57	56	55	54	53	52	51	50	49	48	47	46	45	44	43	42	41	40	39	38	37	36	35	34	33	32
RSVD																															
31	30	29	28	27	26	25	24	23	22	21	20	19	18	17	16	15	14	13	12	11	10	9	8	7	6	5	4	3	2	1	0
RSVD														DBG_ASMI_FLAG	ERR_ASMI_FLAG	RSVD														DBG_ASMI_EN	ERR_ASMI_EN

GLCP_GLD_MSR_SMI Bit Descriptions

Bit	Name	Description
63:18	RSVD	**Reserved.** Reads as 0.
17	DBG_ASMI_ FLAG	**Debug ASMI Flag.** If high, records that an ASMI was generated and applied to the system, due to a debug event. Write 1 to clear; writing 0 has no effect. DBG_ASMI_EN (bit 1) must be low to enable this flag.
16	ERR_ASMI_FLAG	**Error ASMI Flag.** If high, records that an ASMI was generated and applied to the system due to ERR signal. Write 1 to clear; writing 0 has no effect. ERR_ASMI_EN (bit 0) must be low to enable this flag.
15:2	RSVD	**Reserved.** Reads as 0.
1	DBG_ASMI_EN	**Debug ASMI Enable.** Write 0 to enable DBG_ASMI_FLAG (bit 17). Write 1 to disable the flag and ASMI generation.
0	ERR_ASMI_EN	**Error ASMI Enable.** Write 0 to enable ERR_ASMI_FLAG (bit 16). Write 1 to disable the flag and ASMI generation

Downloaded from Arrow.com.

6.20.1.4 GLD Error MSR (GLCP_GLD_MSR_ERROR)

MSR Address 51700003h
Type R/W
Reset Value 00000000_00000000h

The flags are set by internal conditions. The internal conditions are enabled if the EN bit is 0. Reading the FLAG bit returns the value; writing 1 clears the flag; writing 0 has no effect. (See Section 4.7.4 "MSR Address 3: Error Control" on page 78 for further ERR generation details.)

GLCP_GLD_MSR_ERROR Register Map

63	62	61	60	59	58	57	56	55	54	53	52	51	50	49	48	47	46	45	44	43	42	41	40	39	38	37	36	35	34	33	32
RSVD																														SIZE_ERR_FLAG	UNEXP_TYPE_ERR_FLAG
31	30	29	28	27	26	25	24	23	22	21	20	19	18	17	16	15	14	13	12	11	10	9	8	7	6	5	4	3	2	1	0
RSVD																														SIZE_ERR_EN	UNEXP_TYPE_ERR_EN

GLCP_GLD_MSR_ERROR Bit Descriptions

Bit	Name	Description
63:34	RSVD	**Reserved.** Reads as 0.
33	SIZE_ERR_FLAG	**Size Error Flag.** The GLIU interface detected a read or write of more than 1 data packet (size = 16 or 32 bytes). If a response packet is expected, the EXCEP bit of the response packet will be set; in all cases the asynchronous error signal will be set. Write 1 to clear; writing 0 has no effect.
32	UNEXP_TYPE_ ERR_FLAG	**Unexpected Type Error Flag.** An unexpected type was sent to the GLCP GeodeLink interface (start request with BEX type, snoop, peek_write, debug_req, or NULL type). If a response packet is expected, the EXCEP bit of the response packet will be set; in all cases the asynchronous error signal will be set. Write 1 to clear; writing 0 has no effect.
31:2	RSVD	**Reserved.** Reads as 0.
1	SIZE_ERR_EN	**Size Error Enable.** Write 0 to enable the flag (bit 33) and allow the size error event to generate an asynchronous error to the system.
0	UNEXP_TYPE_ ERR_EN	**Unexpected Type Error Enable.** Write 0 to enable the flag (bit 32) and allow the unexpected type event to generate an asynchronous error to the system.

Downloaded from Arrow.com.

6.20.1.5 GLD Power Management MSR (GLCP_GLD_MSR_PM)

MSR Address 51700004h
Type R/W
Reset Value 00000000_00000000h

GLCP_GLD_MSR_PM Register Map

63	62	61	60	59	58	57	56	55	54	53	52	51	50	49	48	47	46	45	44	43	42	41	40	39	38	37	36	35	34	33	32
RSVD																															
31	30	29	28	27	26	25	24	23	22	21	20	19	18	17	16	15	14	13	12	11	10	9	8	7	6	5	4	3	2	1	0
RSVD																												PMODE1		PMODE0	

GLCP_GLD_MSR_PM Bit Descriptions

Bit	Name	Description
63:4	RSVD	**Reserved.** Reads as 0.
3:2	PMODE1	**Power Mode 1.** Power mode for Clock Domain 1 (Debug). 00: Disable clock gating. Clocks are always on. 01: Enable active hardware clock gating. Clock goes off whenever this module's circuits are not busy. 10: Reserved. 11: Reserved.
1:0	PMODE0	**Power Mode 0.** Power mode for Clock Domain 0 (GLIU). 00: Disable clock gating. Clocks are always on. 01: Enable active hardware clock gating. Clock goes off whenever this module's circuits are not busy. 10: Reserved. 11: Reserved.

6.20.1.6 GLD Diagnostic MSR (GLCP_GLD_MSR_DIAG)

MSR Address 51700005h
Type R/W
Reset Value 00000000_00000000h

This register is reserved for internal use by AMD and should not be written to.

Downloaded from Arrow.com.

6.20.2 GLCP Specific MSRs

These registers are used for power management, and facilitate some clock and reset functions. The “CLK” associated registers (i.e., CLKACTIVE, CLKOFF, CLKDISABLE, CLK4ACK and PMCLKDISABLE) have the same layout where each bit is associated with a clock domain. The layout and recommended operating values for the “CLK” associated registers is shown in Table 6-76. For additional discussion on clock management considerations, see Section 4.4 "Clock Considerations" on page 63.

Table 6-76. Clock Mapping / Operational Settings

MSR Bit	Name/Description	Clock Domain	GLCP Register				
			CLK ACTIVE	CLK OFF	CLK DISABLE	CLK 4ACK	PM CLK DISABLE
CLK[63:47]	**RSVD.** Reserved for future use by AMD.	--	RO	0	0	0	0
CLK46	**USBPHYPLLEN.** USB PHY PLL enable. The OHC controller still can handle USB full and low speed traffic if the PLL is disabled.	--	RO	0	0	NA	NA
CLK45	**USB_GLIU.** USB GeodeLink Clock. Needs to be active if any USB functionality is used.	USB_GLD	RO	0	0	0	0
CLK44	**OTC_HCLK.** USB Option controller clock.	OTC_HCLK	RO	0	0	0	0
CLK43	**USBP4_CLK60.** USB PHY 60 MHz UTMI clock from Port4 to the EHC controller.	USBP4_CLK60	RO	0	0	0	0
CLK42	**USBP3_CLK60.** USB PHY 60 MHz UTMI clock from Port3 to the EHC controller.	USBP3_CLK60	RO	0	0	0	0
CLK41	**USBP2_CLK60.** USB PHY 60 MHz UTMI clock from Port2 to the EHC controller.	USBP2_CLK60	RO	0	0	0	0
CLK40	**USBP1_CLK60.** USB PHY 60 MHz UTMI clock from Port1 to the EHC controller.	USBP1_CLK60	RO	0	0	0	0
CLK39	**UDC_CLK60.** USB PHY 60 MHz UTMI clock from Port3 to the USB device controller.	UDS_CLK60	RO	0	0	0	0
CLK38	**EHC_CLK60.** USB PHY 60 MHz UTMI common clock.	EHC_CLK60	RO	0	0	0	0
CLK37	**OHC_HCLK.** USB OHC controller 66 MHz GeodeLink Clock.	OHC_HCLK	RO	0	0	0	0
CLK36	**EHC_HCLK.** USB EHC controller 66 MHz GeodeLink Clock.	EHC_HCLK	RO	0	0	0	0
CLK35	**UDC_HCLK.** USB device controller 66 MHz GeodeLink Clock.	UDC_HCLK	RO	0	0	0	0
CLK34	**OHC_CLK48.** USB OHC controller 48 MHz Clock	USB_COR48	RO	0	0	0	0
CLK33	**GLCP_PCI.** GLCP PCI Clock.	GLCP_PCI	RO	0	0	0	0
CLK32	**GLCP_DBG.** GLCP DBG Logic Clock.	GLCP_DBG	RO	0	0	0	0
CLK31	**GLCP_GLIU.** GLCP GeodeLink Clock.	GLCP_GLD	RO	0	0	0	0
CLK30	**DIVIL_MFGPT_32K_STD.** MFGPT 32 KHz Standby Clock entering DIVIL.	MFGPT_COR_32K_S	RO	0	0	0	0
CLK29	**DIVIL_MFGPT_14M.** MFGPT 14 MHz Clock entering DIVIL.	MFGPT_COR_14M	RO	0	0	0	0
CLK28	**DIVIL_MFGPT_32K.** MFGPT 32 KHz Clock entering DIVIL.	MFGPT_COR_32K	RO	0	0	0	0
CLk27	**DIVIL_GPIO_STD.** GPIO Standby Clock entering DIVIL.	GPIO_COR_S	RO	0	0	0	0
CLK26	**DIVIL_GPIO.** GPIO Clock entering DIVIL.	GPIO_COR	RO	0	0	0	0
CLK25	**DIVIL_PMC_STD.** PMC Standby Clock.	PMC_STB	RO	0	0	0	0
CLK24	**DIVIL_PMC.** PMC Working Logic Clock.	PMC_SLP	RO	0	0	0	0
CLK23	**DIVIL_UART2.** UART2 Clock entering DIVIL.	UART2_COR	RO	0	0	1	0
CLK22	**DIVIL_UART1.** UART1 Clock entering DIVIL.	UART1_COR	RO	0	0	1	0

Downloaded from Arrow.com.

Table 6-76. Clock Mapping / Operational Settings (Continued)

MSR Bit	Name/Description	Clock Domain	GLCP Register				
			CLK ACTIVE	CLK OFF	CLK DISABLE	CLK 4ACK	PM CLK DISABLE
CLK21	**DIVIL_PIT.** PIT Clock entering DIVIL.	PIT_COR	RO	0	0	0	0
CLK20	**DIVIL_SMB.** SMB Clock entering DIVIL.	SMB_COR	RO	0	0	1	0
CLK19	**DIVIL_DMA.** DMA Clock entering DIVIL.	DMA_COR	RO	0	0	1	0
CLK18	**DIVIL_LPC.** LPC Clock entering DIVIL.	LPC_COR	RO	0	0	1	0
CLK17	**DIVIL_LB.** LBus Clock entering DIVIL.	DD_LB	RO	0	0	1	0
CLK16	**DIVIL_GLIU.** GeodeLink (GLIU) Clock entering DIVIL.	DD_GLD	RO	0	0	1	0
CLK15	**ACC_BIT.** AC97 Clock entering ACC.	ACC_COR	RO	0	0	0	0
CLK14	**ACC_LB.** 33 MHz Clock entering ACC.	ACC_LB	RO	0	0	1	0
CLK13	**ACC_GLIU.** GeodeLink (GLIU) Clock entering ACC.	ACC_GLD	RO	0	0	1	0
CLK12	**IDE_LB.** 66 MHz Clock entering IDE.	IDE_LB	RO	0	0	0	0
CLK11	**IDE_GLIU.** GeodeLink (GLIU) Clock entering IDE.	IDE_GLD	RO	0	0	0	0
CLK[10:5]	**RSVD.** Reserved for future use by AMD.	--	RO	0	0	0	0
CLK4	**GLPCI_PCIF.** Fast PCI Clock for chip I/O interface.	GLPCI_INTF	RO	0	0	0	0
CLK3	**GLPCI_PCI.** Normal PCI Clock for GLPCI_SB logic.	GLPCI_TRNA	RO	0	0	1	0
CLK2	**GLPCI_GLIU.** GeodeLink (GLIU) Clock entering GLPCI_SB.	GLPCI_GLD	RO	0	0	1	0
CLK1	**GL0_1.** GeodeLink (GLIU) operational logic clock.	GLIU_GLD	RO	0	0	1	0
CLK0	**GL0_0.** GeodeLink (GLIU) clock to timer logic.	GLIU_STAT	RO	0	0	0	0

Downloaded from Arrow.com.

6.20.2.1 GLCP Clock Disable Delay Value (GLCP_CLK_DIS_DELAY)

MSR Address 51700008h
Type R/W
Reset Value 00000000_00000000h

This register has bits that, when set, disable clocks.

GLCP_CLK_DIS_DELAY Register Map

63	62	61	60	59	58	57	56	55	54	53	52	51	50	49	48	47	46	45	44	43	42	41	40	39	38	37	36	35	34	33	32
RSVD																															
31	30	29	28	27	26	25	24	23	22	21	20	19	18	17	16	15	14	13	12	11	10	9	8	7	6	5	4	3	2	1	0
RSVD								CLK_DELAY																							

GLCP_CLK_DIS_DELAY Bit Descriptions

Bit	Name	Description
63:24	RSVD	**Reserved.** Reads as 0.
23:0	CLK_DELAY	**Clock Disable Delay.** If enabled in GLCP_GLB_PM (MSR 5170000Bh[1] = 1), this field indicates the period to wait from the assertion of SUSPA# before gating-off clocks specified in GLCP_PMCLKDISABLE (MSR 51700009h). If this delay is enabled, it overrides or disables the function of GLCP_CLK4ACK (MSR 51700013h). If GLCP_GLB_PM enable bit is not set (MSR 5170000Bh[1] = 0), but this register (GLCP_CLK_DIS_DELAY) is non-zero, then this register behaves as a timeout for the CLK4ACK behavior. Note that this number is in terms of PCI clock cycles, divided by 16.

6.20.2.2 GLCP Clock Mask for Sleep Request (GLCP_PMCLKDISABLE)

MSR Address 51700009h
Type R/W
Reset Value 00000000_00000000h

GLCP_PMCLKDISABLE Register Map

63	62	61	60	59	58	57	56	55	54	53	52	51	50	49	48	47	46	45	44	43	42	41	40	39	38	37	36	35	34	33	32
RSVD																		CLK45	CLK44	CLK43	CLK42	CLK41	CLK40	CLK39	CLK38	CLK37	CLK36	CLK35	CLK34	CLK33	CLK32
31	30	29	28	27	26	25	24	23	22	21	20	19	18	17	16	15	14	13	12	11	10	9	8	7	6	5	4	3	2	1	0
CLK31	CLK30	CLK29	CLK28	CLK27	CLK26	CLK25	CLK24	CLK23	CLK22	CLK21	CLK20	CLK19	CLK18	CLK17	CLK16	CLK15	CLK14	CLK13	CLK12	CLK11	CLK10	CLK9	CLK8	CLK7	CLK6	CLK5	CLK4	CLK3	CLK2	CLK1	CLK0

GLCP_PMCLKDISABLE Bit Descriptions

Bit	Name	Description
63:46	RSVD	**Reserved**
45:0	CLK_DIS	**Clock Disable.** The bits in this field correspond to the Clock Off (CLK_OFF) bits in GLCP_CLKOFF (MSR 51700010h). If a bit in this field is set, then the corresponding CLK_OFF bit is set when the power management circuitry disables clocks when entering Sleep. For bit-to-clock correspondences and recommended operational settings see Table 6-76 on page 566.

Downloaded from Arrow.com.

6.20.2.3 GLCP Global Power Management Control (GLCP_GLB_PM)

MSR Address 5170000Bh
Type R/W
Reset Value 00000000_00000000h

GLCP_GLB_PM Register Map

63	62	61	60	59	58	57	56	55	54	53	52	51	50	49	48	47	46	45	44	43	42	41	40	39	38	37	36	35	34	33	32
RSVD																															
31	30	29	28	27	26	25	24	23	22	21	20	19	18	17	16	15	14	13	12	11	10	9	8	7	6	5	4	3	2	1	0
RSVD																														CLK_DLY_EN	RSVD

GLCP_GLB_PM Bit Descriptions

Bit	Name	Description
63:2	RSVD	**Reserved**
1	CLK_DLY_EN	**Clock Delay Enable.** Write 1 to enable gating-off clock enables from a delay rather than from GLCP_CLK4ACK (MSR 51700013h).
0	RSVD	**Reserved.** Must be written 0.

6.20.2.4 GLCP Debug Output from Chip (GLCP_DBGOUT)

MSR Address 5170000Ch
Type R/W
Reset Value 00000000_00000000h

GLCP_DBGOUT Register Map

63	62	61	60	59	58	57	56	55	54	53	52	51	50	49	48	47	46	45	44	43	42	41	40	39	38	37	36	35	34	33	32
RSVD																															
31	30	29	28	27	26	25	24	23	22	21	20	19	18	17	16	15	14	13	12	11	10	9	8	7	6	5	4	3	2	1	0
RSVD																															

GLCP_DBGOUT Bit Descriptions

Bit	Name	Description
63:0	RSVD	**Reserved.** These bits are reserved for internal testing only. These bits should not be written to.

Downloaded from Arrow.com.

6.20.2.5 Software Communication Register (GLCP_DOWSER)

MSR Address 5170000Eh
Type R/W
Reset Value 00000000_00000000h

This register is a free 64-bit read/write register that can be used by software, for example, to store flags.

GLCP_DOWSER Register Map

63	62	61	60	59	58	57	56	55	54	53	52	51	50	49	48	47	46	45	44	43	42	41	40	39	38	37	36	35	34	33	32
VAL																															
31	30	29	28	27	26	25	24	23	22	21	20	19	18	17	16	15	14	13	12	11	10	9	8	7	6	5	4	3	2	1	0
VAL																															

GLCP_DOWSER Bit Descriptions

Bit	Name	Description
63:0	VAL	**Value.** This 64-bit scratchpad register was specifically added for SW debugger use (DOWSER). The register resets to 00000000_00000000h with both hard and soft resets.

6.20.2.6 GLCP Clock Control (GLCP_CLKOFF)

MSR Address 51700010h
Type R/W
Reset Value 00000000_00000000h

This register has bits that, when set, disable clocks immediately. It is not intended for normal use, only as a debug tool.

GLCP_CLKOFF Register Map

63	62	61	60	59	58	57	56	55	54	53	52	51	50	49	48	47	46	45	44	43	42	41	40	39	38	37	36	35	34	33	32
RSVD																	CLK46	CLK45	CLK44	CLK43	CLK42	CLK41	CLK40	CLK39	CLK38	CLK37	CLK36	CLK35	CLK34	CLK33	CLK32
31	30	29	28	27	26	25	24	23	22	21	20	19	18	17	16	15	14	13	12	11	10	9	8	7	6	5	4	3	2	1	0
CLK31	CLK30	CLK29	CLK28	CLK27	CLK26	CLK25	CLK24	CLK23	CLK22	CLK21	CLK20	CLK19	CLK18	CLK17	CLK16	CLK15	CLK14	CLK13	CLK12	CLK11	CLK10	CLK9	CLK8	CLK7	CLK6	CLK5	CLK4	CLK3	CLK2	CLK1	CLK0

GLCP_CLKOFF Bit Descriptions

Bit	Name	Description
63:47	RSVD	**Reserved**
46:0	CLK_OFF	**Clock Off.** A 1 in any bit position causes the corresponding clock to be immediately and unconditionally shut off. It is not intended for normal operational use, only as a debug tool. For bit-to-clock correspondences and recommended operational settings see Table 6-76 on page 566.

Downloaded from Arrow.com.

6.20.2.7 GLCP Clock Active (GLCP_CLKACTIVE)

MSR Address 51700011h
Type RO
Reset Value 0000xxxx_xxxxxxxxh

GLCP_CLKACTIVE Register Map

63	62	61	60	59	58	57	56	55	54	53	52	51	50	49	48	47	46	45	44	43	42	41	40	39	38	37	36	35	34	33	32
RSVD																	CLK46	CLK45	CLK44	CLK43	CLK42	CLK41	CLK40	CLK39	CLK38	CLK37	CLK36	CLK35	CLK34	CLK33	CLK32
31	30	29	28	27	26	25	24	23	22	21	20	19	18	17	16	15	14	13	12	11	10	9	8	7	6	5	4	3	2	1	0
CLK31	CLK30	CLK29	CLK28	CLK27	CLK26	CLK25	CLK24	CLK23	CLK22	CLK21	CLK20	CLK19	CLK18	CLK17	CLK16	CLK15	CLK14	CLK13	CLK12	CLK11	CLK10	CLK9	CLK8	CLK7	CLK6	CLK5	CLK4	CLK3	CLK2	CLK1	CLK0

GLCP_CLKACTIVE Bit Descriptions

Bit	Name	Description
63:47	RSVD (RO)	**Reserved (Read Only).** Reads as 0.
46	USBPLL_ACT	**USB PLL Active (Read Only).** This register reports the inverted status of the corresponding CLK_OFF bit in GLCP_CLKOFF (MSR 51700010h).
45:0	CLK_ACT (RO)	**Clock Active (Read Only).** This register reports the status, active or inactive, of each clock. When set, each bit indicates that a block is internally enabling its own clock. The actual clock can be off even though the CLK_ACT bit is set, if the corresponding CLK_OFF bit is set in GLCP_CLKOFF (MSR 51700010h). For bit-to-clock correspondences and recommended operational settings see Table 6-76 on page 566.

6.20.2.8 GLCP Clock Mask for Debug Clock Stop Action (GLCP_CLKDISABLE)

MSR Address 51700012h
Type R/W
Reset Value 00000000_00000000h

GLCP_CLKDISABLE Register Map

63	62	61	60	59	58	57	56	55	54	53	52	51	50	49	48	47	46	45	44	43	42	41	40	39	38	37	36	35	34	33	32
RSVD																															
31	30	29	28	27	26	25	24	23	22	21	20	19	18	17	16	15	14	13	12	11	10	9	8	7	6	5	4	3	2	1	0
RSVD																															

GLCP_CLKDISABLE Bit Descriptions

Bit	Name	Description
63:0	RSVD	**Reserved.** This register is reserved for internal testing only. These bits should not be written to.

Downloaded from Arrow.com.

6.20.2.9 GLCP Clock Active Mask for Suspend Acknowledge (GLCP_CLK4ACK)

MSR Address 51700013h
Type R/W
Reset Value 00000000_00000000h

This register has bits that correspond to the Clock Active (CLK_ACT) bits in GLCP_CLKACTIVE (MSR 51700011h). If the bit in GLCP_CLK4ACK is set, then the SUSPA# signal will not go low unless all the marked clocks are inactive.

GLCP_CLK4ACK Register Map

63	62	61	60	59	58	57	56	55	54	53	52	51	50	49	48	47	46	45	44	43	42	41	40	39	38	37	36	35	34	33	32
RSVD																		CLK45	CLK44	CLK43	CLK42	CLK41	CLK40	CLK39	CLK38	CLK37	CLK36	CLK35	CLK34	CLK33	CLK32
31	**30**	**29**	**28**	**27**	**26**	**25**	**24**	**23**	**22**	**21**	**20**	**19**	**18**	**17**	**16**	**15**	**14**	**13**	**11**	**11**	**10**	**9**	**8**	**7**	**6**	**5**	**4**	**3**	**2**	**1**	**0**
CLK31	CLK30	CLK29	CLK28	CLK27	CLK26	CLK25	CLK24	CLK23	CLK22	CLK21	CLK20	CLK19	CLK18	CLK17	CLK16	CLK15	CLK14	CLK13	CLK12	CLK11	CLK10	CLK9	CLK8	CLK7	CLK6	CLK5	CLK4	CLK3	CLK2	CLK1	CLK0

GLCP_CLK4ACK Bit Descriptions

Bit	Name	Description
63:46	RSVD	**Reserved**
45:0	CLKACT_EN_SLP	**Clock Active Enable for Sleep.** A 1 in any bit position indicates the corresponding clock is to be monitored during a power management Sleep operation. When all the clocks with associated 1s become inactive, the GLCP sends a Suspend Acknowledge (SUSPA#) to the power management logic to begin the transition to the Sleep state. Use of this register during Sleep sequences requires the CLK_DLY_EN bit (MSR 5170000Bh[1]) to be 0. For bit-to-clock correspondences and recommended operational settings see Table 6-76 on page 566.

Downloaded from Arrow.com.

6.20.2.10 GLCP System Reset Control (GLCP_SYS_RST)

MSR Address 51700014h
Type R/W
Reset Value 00000000_00000000h

Writing 1 to the CHIP_RESET bit creates a chip-wide reset and in turn, resets this register. Writing this register with the CHIP_RESET bit set will never send a write-response over the GLIU Interface (this allows halting bus traffic before the reset occurs).

GLCP_SYS_RST Register Map

63	62	61	60	59	58	57	56	55	54	53	52	51	50	49	48	47	46	45	44	43	42	41	40	39	38	37	36	35	34	33	32
RSVD																															
31	30	29	28	27	26	25	24	23	22	21	20	19	18	17	16	15	14	13	12	11	10	9	8	7	6	5	4	3	2	1	0
RSVD								RSVD																							CHIP_RESET

GLCP_SYS_RST Bit Descriptions

Bit	Name	Description
63:24	RSVD	**Reserved.** Reads as 0.
23:1	RSVD	**Reserved.** These bits can be read/written but should not be used; write to 0.
0	CHIP_RESET	**Chip Reset.** When written to a 1, the CS5536 companion device enters reset, which in turn resets this register. JTAG logic is not reset by CHIP_RESET, but otherwise the entire chip is reset. (Default = 0)

6.20.2.11 GLCP Debug Clock Control (GLCP_DBGCLKCTL)

MSR Address 51700016h
Type R/W
Reset Value 00000000_00000002h

This register is reserved for internal testing only. These bits should not be written to.

GLCP_DBGCLKCTL Register Map

63	62	61	60	59	58	57	56	55	54	53	52	51	50	49	48	47	46	45	44	43	42	41	40	39	38	37	36	35	34	33	32
RSVD																															
31	30	29	28	27	26	25	24	23	22	21	20	19	18	17	16	15	14	13	12	11	10	9	8	7	6	5	4	3	2	1	0
RSVD																															

GLCP_DBGCLKCTL Bit Descriptions

Bit	Name	Description
63:0	RSVD	**Reserved.** This register is reserved for internal testing only. These bits should not be written to.

Downloaded from Arrow.com.

6.20.2.12 Chip Revision ID (GLCP_CHIP_REV_ID)

MSR Address 51700017h
Type RO
Reset Value 00000000_000000xxh

CHIP_REV_ID Register Map

63	62	61	60	59	58	57	56	55	54	53	52	51	50	49	48	47	46	45	44	43	42	41	40	39	38	37	36	35	34	33	32
RSVD																															
31	30	29	28	27	26	25	24	23	22	21	20	19	18	17	16	15	14	13	12	11	10	9	8	7	6	5	4	3	2	1	0
RSVD																								REVID							

CHIP_REV_ID Bit Descriptions

Bit	Name	Description
63:8	RSVD	**Reserved**
7:0	REVID	**Revision.** Identifies silicon revision. See *AMD Geode™ CS5536 Companion Device Specification Update* document for value.

Downloaded from Arrow.com.

7 Electrical Specifications

This chapter provides information about:

- General Specifications
- DC Characteristics
- AC Characteristics

Throughout this section, the following abbreviations apply:

C	degrees centigrade
mA	milli amps
MHz	mega hertz
ms	milli seconds
mV	milli volts
NA	not applicable
ns	nano seconds
pF	pico farads
t_{ENABLE}	Time Enable
t_{HOLD}	Time Hold
t_{SETUP}	Time Setup
t_{VAL}	Time Valid
V	volts
µA	micro amps
µs	micro seconds

7.1 General Specifications

7.1.1 Electro Static Discharge (ESD)

This device is a high performance integrated circuit and is ESD sensitive. Handling and assembly of this device should be performed at ESD free workstations. Table 7-1 lists the ESD ratings of the AMD Geode™ CS5536 companion device.

Table 7-1. Electro Static Discharge (ESD)

Parameter	Units
Human Body Model (HBM)	2000V ESD
Machine Model (MM)	200V ESD

7.1.2 Power/Ground Connections and Decoupling

When testing and operating this component, use standard high frequency techniques to reduce parasitic effects.
For example:

- Filter the DC power leads with low-inductance decoupling capacitors.
- Use low-impedance wiring.
- Utilize all power and ground connections.

7.1.3 Absolute Maximum Ratings

Stresses beyond those indicated in Table 7-2 may cause permanent damage to the component, reduce device reliability, and result in premature failure, even when there is no immediately apparent sign of failure. Prolonged exposure to conditions at or near the absolute maximum ratings may also result in reduced device life span and reduced reliability.

Note: The values in the Table 7-2 are stress ratings only. They do not imply that operation under these conditions is possible.

Table 7-2. Absolute Maximum Ratings

Parameter	Min	Max	Units	Comment
Operating Case Temperature	-65	110	C	Power applied and no clocks.
Storage Temperature	-65	150	C	No power applied.
Core Supply		1.45	V	
I/O Supply		3.6	V	
Voltage on Non-5V Tolerant Balls (supplied by V_{IO}, V_{IO_USB}, V_{IO_VSB})	-0.5	V_{IO}+0.3 V_{IO_USB}+0.3 V_{IO_VSB}+0.3	V	
Voltage on 5V Tolerant Balls	-0.5	5.5	V	

Downloaded from Arrow.com.

7.1.4 Recommended Operating Conditions

Table 7-3. Recommended Operating Conditions

Symbol	Parameter	Min	Typ	Max	Units
V_{CORE}, V_{CORE_USB}	Core Supply Voltage, Working Domain (Note 1, Note 2)	1.16	1.20/1.25/1.40	1.44	V
V_{CORE_VSB}	Core Supply Voltage, Standby Domain (Note 1, Note 2)	1.16	1.20/1.25/1.40	1.44	V
V_{IO}, V_{IO_USB}	I/O Supply Voltage, Working Domain	3.14	3.3	3.46	V
V_{IO_VSB}	I/O Supply Voltage, Standby Domain	3.14	3.3	3.46	V
V_{BAT}	Real-time Clock Battery	2.4	3.0	3.6	V
T_{CASE}	Case Temperature of Package	0		85	°C
		-40		85	°C
Input Timing	Input Rise and Fall Times (unless otherwise indicated) See Figure 7-1 "Clock Reference Definition" on page 580 for rise and fall definition.	0.5		5	ns

Note 1. The CS5536 companion device is designed to be used with the AMD Geode LX processor; as such, their core voltage ranges are compatible.

Note 2. V_{CORE}, V_{CORE_USB}, and V_{CORE_VSB} must be operated at the same typical voltage.

Downloaded from Arrow.com.

7.1.5 Current Consumption

Absolute maximum current consumption was measured with voltages at their respective maximums and capturing the peak currents observed for each voltage rail. The test consisted of simultaneous file copies from one USB HDD to another USB HDD and from one IDE HDD to one of the USB HDD's being used in the first file copy, while in Windows® XP SP1. It is believed that this measurement produces realistic maximum currents. Thermal Design Power (TDP) is a function of all power contributors at maximum added together.

This test does not guarantee maximum current. There may be pathological applications that result in higher measured currents.

Typical Average current is measured with $V_{CORE5536}$ @ 1.25V, while running WinBench® 99 Business Graphics locally in Windows XP SP1. Typical Average may not be applicable for all system designs.

All measurements were taken at 25ºC ambient air.

Table 7-4. Current Consumption

Symbol	Description	TDP = 0.65W		Units	Comments
		Typ Avg	Abs Max		
I_{CORE_ON}	Core Current	45	65	mA	ACPI S0 State.
$I_{CORE_VSB_ON}$	Standby Core Current		<1	mA	
$I_{CORE_USB_ON}$	USB Core Current	65	100	mA	
I_{IO_ON}	I/O Current	15	40	mA	
$I_{IO_VSB_ON}$	Standby I/O Current		<1	mA	
$I_{IO_USB_ON}$	USB I/O Current	75	90	mA	
I_{CORE_Sleep}	Core plus Standby Core Current		26	mA	ACPI S1 State. All clocks stopped. All I/Os driven low or TRI-STATE.
$I_{CORE_VSB_Sleep}$	Standby Core Current		<1.5	mA	
$I_{CORE_USB_Sleep}$	USB Core Current		10	mA	
I_{IO_Sleep}	I/O plus Standby I/O Current		15	mA	
$I_{IO_VSB_Sleep}$	Standby I/O Current		<1	mA	
$I_{IO_USB_Sleep}$	USB I/O Current		40	mA	
$I_{CORE_VSB_Standby}$	Standby Core Current		<1	mA	ACPI S3, S4.
$I_{IO_VSB_Standby}$	Standby I/O Current		<1	mA	ACPI S3, S4. No V_{IO_VSB} powered output sourcing current.
I_{BAT}	Battery Current @ V_{BAT} = 3.0V (Nominal), 25°C		2	µA	ACPI S5. Use for battery life calculation. When off, system quickly reaches ambient temperature.
	Battery Current @ V_{BAT} = 3.0V (Max), 85°C		6	µA	ACPI S5.

Downloaded from Arrow.com.

7.2 DC Characteristics

All DC parameters and current specifications in this section are specified under the operating conditions listed in Table 7-3 on page 576 (i.e., V_{CORE} and V_{CORE_VSB} = All; V_{IO} and V_{IO_VSB} = All; T_{CASE} = All) unless otherwise specified.

For a detailed explanation of buffer types for the parameters listed in Table 7-5 on page 578, see Table 3-4 "Buffer Type Characteristics" on page 33.

For the DC characteristics of the USB low-voltage differential-signal I/O buffers, see the USB Specification, Revision 2.0.

Table 7-5. DC Characteristics

Symbol	Buffer Type	Min	Typ	Max	Units	Comment/Condition
V_{IL}	Low Level Input Voltage					
	GP24	-0.3		0.8	V	
	PCI	-0.5		$0.3*V_{IO}$	V	
	IDE (PIO 0-4, MDMA 0-2, UDMA 0-4)	-0.3		0.8	V	
	SMB	-0.3		0.8	V	
	RESET_STAND# (Bare_Wire)	-0.3		0.8	V	
V_{HL_TH}	IDE (UDMA5)	1.0		1.5	V	High to low input threshold
V_{IH}	High Level Input Voltage					
	GP24	2.0		V_{IO}+0.3	V	
	PCI	$0.5*V_{IO}$		V_{IO}+0.3	V	
	IDE (PIO 0-4, MDMA 0-2, UDMA 0-4)	2.0		5.5	V	
	SMB	2.1		5.5	V	5V tolerant, backdrive (back-powered) protected. Note 1.
	RESET_STAND# (Bare_Wire)	2.0		V_{IO}+0.3	V	
V_{LH_TH}	IDE (UDMA5)	1.5		2.0	V	High to low input threshold
V_{OL}	Low Level Output Voltage					
	GP24			0.4	V	I_{OL} = 24 mA.
	PCI			$0.1*V_{IO}$	V	I_{OL} = 1.5 mA.
	IDE (PIO 0-4, MDMA 0-2, UDMA 0-4)			0.5	V	I_{OL} = 4 mA.
	IDE (UDMA5)			0.51	V	I_{OL} = 6 mA.
	SMB			0.4	V	I_{OL} = 4 mA.

Downloaded from Arrow.com.

Table 7-5. DC Characteristics (Continued)

Symbol	Buffer Type	Min	Typ	Max	Units	Comment/Condition
V_{OH}	High Level Output Voltage					
	GP24	2.4			V	at I_{OH} = -24 mA.
	PCI	0.9*V_{IO}			V	at I_{OH} = -0.5 mA.
	IDE (PIO 0-4, MDMA 0-2, UDMA 0-4)	2.4			V	at I_{OH} = -0.4 mA.
	IDE (UDMA5)	V_{IO}-0.51		V_{IO}+0.3		at I_{OH} = (-6 .. 3) mA
	SMB	NA				Open-drain.
I_{ILeak} (Note 2)	Input Leakage Current					
	GP24		+/- 3		µA	Driver output disabled. Vpad = 0 to V_{IO}.
	PCI		+/- 5		µA	Driver output disabled. Vpad = 0 to V_{IO}.
	IDE		+/- 2		µA	Driver output disabled. Vpad = 0 to V_{IO}.
	SMB		+/- 5		µA	Driver output disabled. Vpad = 0 to V_{IO}.
			5		µA	Driver output disabled. Note 1. Vpad = V_{IO} to 5.5.
	RESET_STAND# (Bare_Wire)		+/- 3		µA	Vpad = 0 to V_{IO}.
I_{PU} (Note 3)	Pull-Up Current					
	GP24	-50	100	-150	µA	Pull-up on and pull-down off. Output TRI-STATE and Vpad = 0.
I_{PD} (Note 3)	Pull-Down Current					
	GP24	20	45	130	µA	Pull-up off and pull-down on. Output TRI-STATE and Vpad = V_{IO}.

Note 1. The following SMB I/Os are limited to an input high max of V_{IO}: FUNC_TEST, SMB_CLK, and SMB_DATA.
Note 2. This parameter is sometimes referred to as TRI-STATE leakage.
Note 3. No pull-ups/downs on PCI, IDE, and SMB I/O cell types.

Downloaded from Arrow.com.

7.3 AC Characteristics

Unless otherwise indicated, no inputs have a specified hysteresis. Figure 7-1 and Figure 7-2 provide reference definitions used in this section.

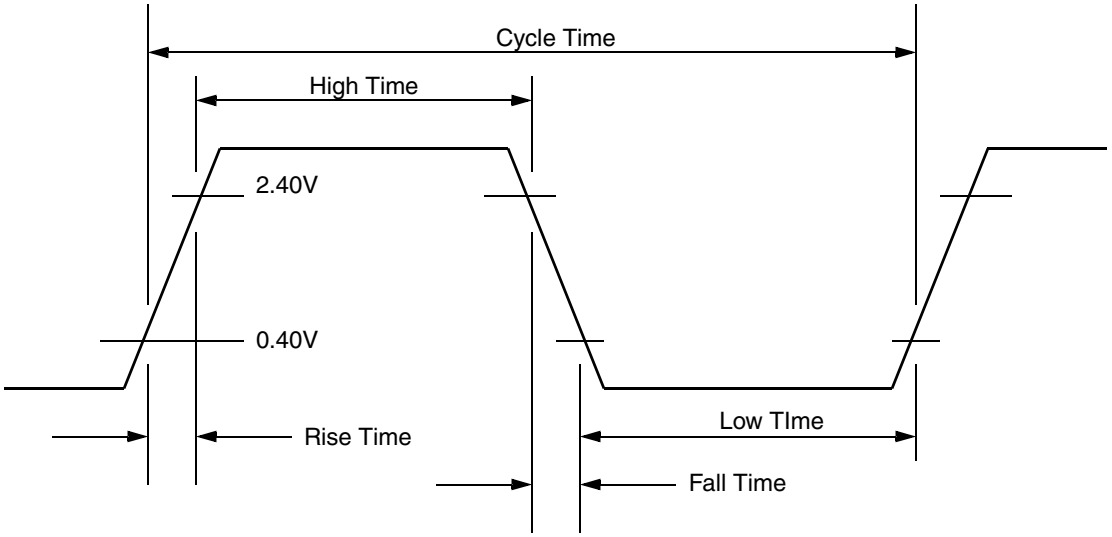

Figure 7-1. Clock Reference Definition

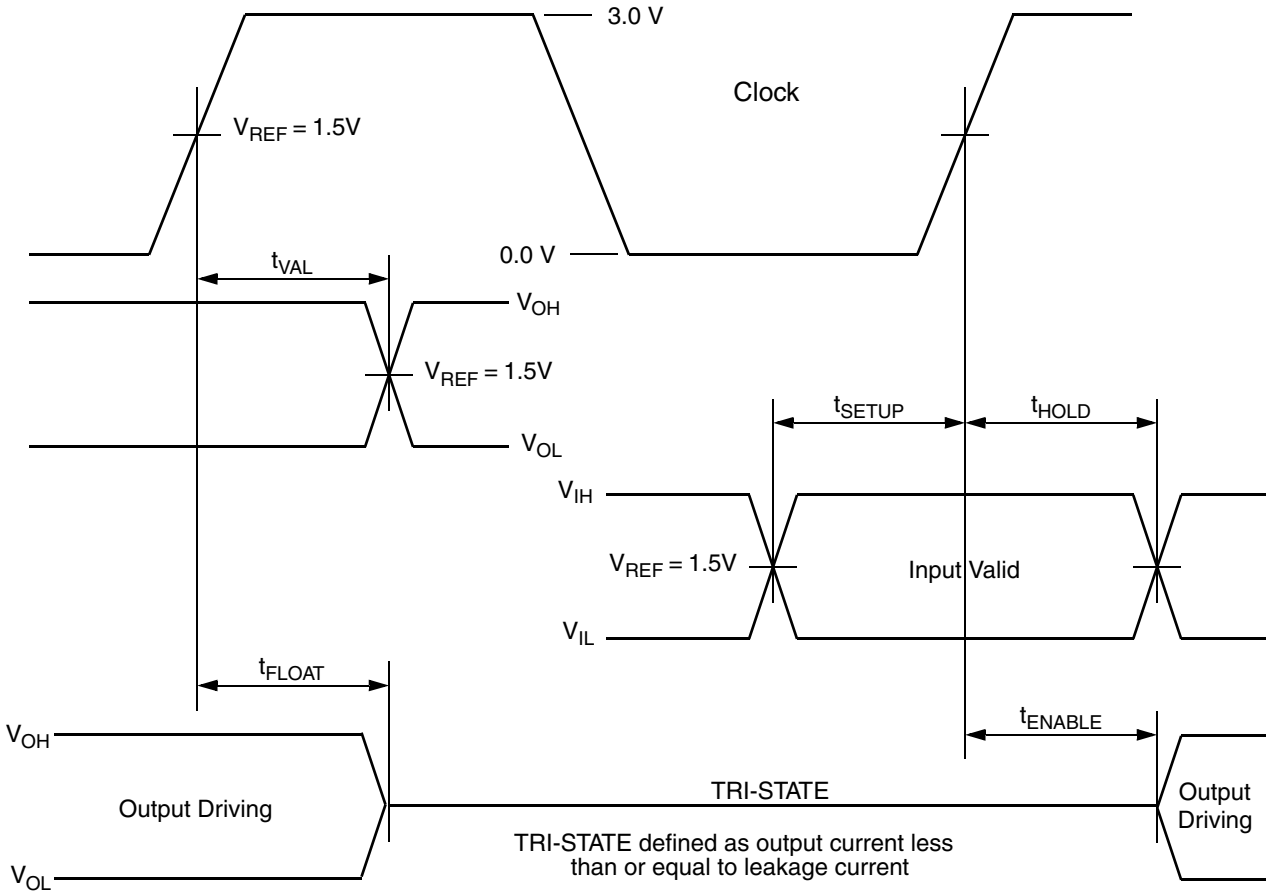

Figure 7-2. AC Reference Timing and Test Definition

Downloaded from Arrow.com.

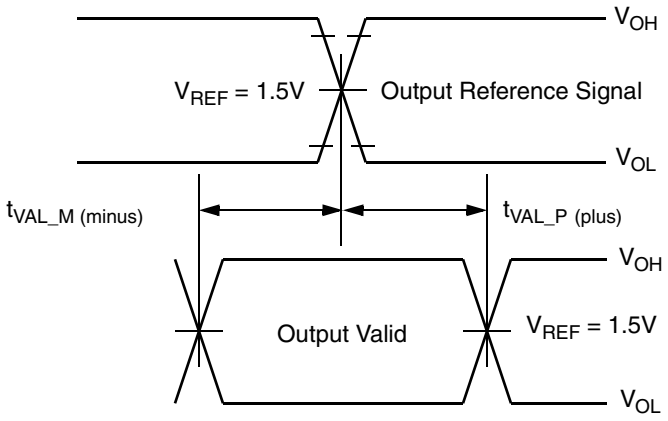

Figure 7-3. Output Reference Timing and Test Definition

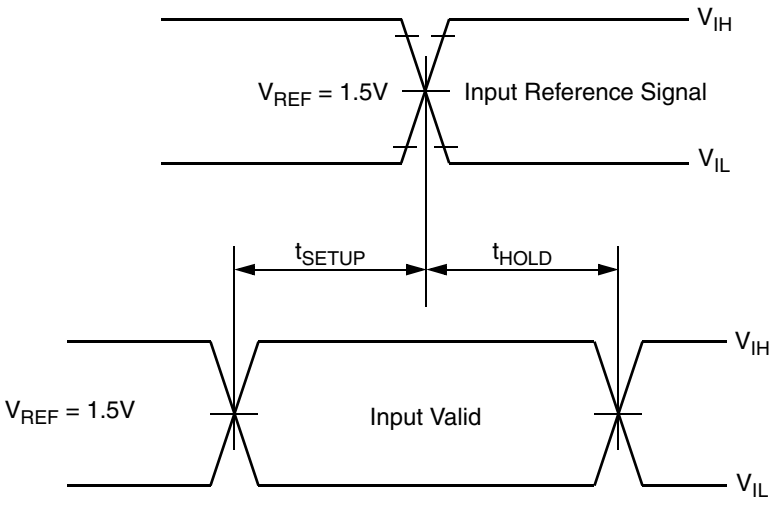

Figure 7-4. Input Reference Timing and Test Definition

Downloaded from Arrow.com.

7.3.1 Clock Inputs

Most of the clocks in Table 7-6 indicate a minimum frequency of zero. Specifically, there are no dynamic circuits with minimum clock speeds in the respective clock domains. Additionally, *Active Hardware Clock Gating* (AHCG) (see Section 4.8 "Power Management" on page 79) will turn off all or some of the system clocks at selected points in time to save power, KHZ32_XCI/KH32XCO being one exception to “off all”. It must always run.

MHZ48_CLK and MHZ48_XCI/MHZ48_XCO, respectively, when enabled as active input, must always run for proper operation of the USB controllers.

While the above discussion is accurate, there are minimum clock requirements for proper system operation. These are indicated in the Notes for each clock in Table 7-6.

Table 7-6. Clock Timing Parameters

Signal	Parameter	Min	Typ	Max	Units	Comment/Condition
MHZ66_CLK	Frequency	0	66.00	66.50	MHz	Note 1 and Note 2.
	Rise/Fall Time	0.5		2	ns	
	High/Low Time	6		None	ns	Note 3.
PCI_CLK	Frequency	0	33 or 66	67.50	MHz	Note 1 and Note 4.
	Rise/Fall Time	0.5		2	ns	
	High/Low Time	6		None	ns	Note 3.
MHZ48_CLK	Frequency		48.00		MHz	Note 1 and Note 5.
	Rise/Fall Time	0.5		2	ns	
	High/Low Time	8.5		None	ns	Note 3.
LPC_CLK	Frequency	0	33	34	MHz	Note 1, Note 4, and Note 6.
	Rise/Fall Time	0.5		2	ns	
	High/Low Time	6		None	ns	Note 3.
MHZ14_CLK	Frequency	0	14.31818	15.00	MHz	Note 1 and Note 7.
	Rise/Fall Time	0.5		2	ns	
	High/Low Time	6		None	ns	
AC_CLK	Frequency	0	12.239	13.00	MHz	Note 1 and Note 8.
	Rise/Fall Time	0.5		2	ns	
	High/Low Time	6		None	ns	
TCK	Frequency	0	4.0	15.00	MHz	Note 1.
	Rise/Fall Time	0.5		2	ns	
	High/Low Time	6		None	ns	
KHZ32_XCI KHZ32_XCO	Frequency	0	32.768	1000	KHz	Note 1 and Note 9.
	High/Low Time	0.5		None	µs	
MHZ48_XCI MHZ48_XCO	Frequency		48.000		MHz	Note 1 and Note 5 and Note 10.
	High/Low Time	8.5		None	ns	

Note 1. Signal parameters are defined in Figure 7-1 "Clock Reference Definition" on page 580.
Note 2. Operationally, the minimum clock is 64.50 MHz. Operation out of the 66 MHz range indicated causes the CS5536 companion device ATA Controller to operate out of ATA specification limits.
Note 3. Clock duty cycles not 100% tested. Guaranteed by design.
Note 4. For maximum system performance, this clock should be as high as possible up to the maximum indicated.
Note 5. The required frequency accuracy is +/-100 ppm, peak jitter of +/-100 ps.
Note 6. Must be greater than half the MHZ14_CLK frequency.
Must be at least four times faster than the KHZ32_XCI frequency.
Note 7. This clock is used as the system time base and hence should have the “typical” frequency indicated.
Note 8. This clock should be connected to the external codec output that is half the codec input clock of 24.478 MHz.

Downloaded from Arrow.com.

Note 9. Typically, connect these pins to a 32.768 KHz crystal. However, an external oscillator may be connected to the KHZ32_XCI pin and driven to the maximum rate shown for testing. When operated with an external oscillator, leave the KHZ32_XCO pin open. When operating with an external oscillator, input voltage on KHZ32_XCI (khz32_xci) should swing rail-to-rail, that is, zero-to-V_{IO_VSB}. With external oscillator, the input voltage high should always be at least 3.0 volts.

Note 10. The crystal must have a fundamental frequency of 48 MHz and an output differential voltage of no less than 500 mV with respect to the MHZ48_XCI signal.

7.3.2 Reset and Test Inputs

Table 7-7. Reset and Test Timing Parameters

Signal	Parameter	Min	Max	Units	Comment/Condition
RESET_WORK#	Low Time	3	None	ns	Time required to detect a reset.
	High Time	3	None	ns	
	Cycle Time does not apply. Once the component has started a reset operation, cycling this input generally does not apply.				
RESET_STAND#	Low Time	3	None	ns	Time required to detect a reset.
	High Time	3	None	ns	
	Cycle Time does not apply. Once the component has started a reset operation, cycling this input generally does not apply.				
LVD_EN#	Static signal. Tie high or low as indicated in the signal description.				
TEST_MODE	Static signal. Operationally, always tie low.				
FUNC_TEST	Static signal. Operationally, always tie low.				

Downloaded from Arrow.com.

7.3.3 PCI and Related Signals

The signals detailed in this subsection use a “PCI” buffer type except SUSP#, SUSPA#, and RESET_OUT#, which use a GP24 buffer type. For a detailed explanation of buffer types, see Table 3-4 "Buffer Type Characteristics" on page 33.

In this subsection, unless otherwise noted:

- All timing specifications are specified under the operating conditions listed in Table 7-3 on page 576 (i.e., V_{CORE} and V_{CORE_VSB} = All; V_{IO} and V_{IO_VSB} = All; T_{CASE} = All).
- Signals are referenced to PCI_CLK low-to-high edge.
- Signal and test parameters are defined in Figure 7-2 "AC Reference Timing and Test Definition" on page 580.

Table 7-8. PCI, SUSP#, SUSPA#, and RESET_OUT# Timing Parameters

Signal	Parameter	Min	Max	Units	Comment/Condition
PCI_INTA# (GPIO0) PCI_INTB# (GPIO7)	Async Input	NA	NA	ns	No clock reference. See Section 7.3.13 "GPIO Signaling" on page 597.
REQ#	t_{VAL}	2	6	ns	Note 1.
GNT#	t_{SETUP}	5	NA	ns	
	t_{HOLD}	0	NA	ns	
CBE[3:0]#, DEVSEL#, FRAME#, TRDY#, IRDY#, STOP#, PAR, AD[31:0]	t_{VAL}	2	6	ns	Applies when signal is an output. Note 1.
	t_{FLOAT}	NA	8	ns	Applies when signal is an output. Note 2.
	t_{ENABLE}	2	NA	ns	Applies when signal is an output. Note 3.
	t_{SETUP}	3	NA	ns	Applies when signal is an output.
	t_{HOLD}	0	NA	ns	
SUSP#	t_{VAL}	1	6	ns	Note 1.
RESET_OUT#	t_{VAL}	3	12	ns	Note 4.
SUSPA#	t_{SETUP}	3	NA	ns	
	t_{HOLD}	0	NA	ns	

Note 1. t_{VAL} min times with load of: 10 pF cap to ground.
t_{VAL} max times with load of: 35 pF cap to ground.
Note 2. t_{FLOAT} with the load of: 10 pF cap to ground.
Note 3. t_{ENABLE} with the load of: 10 pF cap to ground.
Note 4. t_{VAL} min times with load of: 10 pF cap to ground
t_{VAL} max times with load of: 50 pF cap to ground.

Downloaded from Arrow.com.

7.3.4 IDE Signals in IDE Mode

The signals detailed in this subsection use an “IDE” buffer type. For a detailed explanation of buffer types, see Table 3-4 "Buffer Type Characteristics" on page 33.

In this subsection, unless otherwise noted:

- All timing specifications are specified under the operating conditions listed in Table 7-3 on page 576 (i.e., V_{CORE} and V_{CORE_VSB} = All; V_{IO} and V_{IO_VSB} = All; T_{CASE} = All).
- Signals are referenced to MHZ66_CLK low-to-high edge.
- Signal and test parameters are defined in Figure 7-2 "AC Reference Timing and Test Definition" on page 580.

Table 7-9. IDE Register, PIO, and Multiword DMA Timing Parameters

Signal	Parameter	Min	Max	Units	Comment/Condition
IDE_CS[1:0]#, IDE_IOW0, IDE_AD[2:0], IDE_RESET#, IDE_DACK0#	t_{VAL}	2	10	ns	IDE_DACK0# is only used for DMA. Note 1 and Note 2.
IDE_IOR0#	t_{VAL}	3	13	ns	Note 1 and Note 2.
IDE_DATA[15:0] for Write					Note 3.
IDE_DATA[15:0] for Read					Note 4
IDE_RDY0, IDE_IRQ0, IDE_DREQ0	Async Input	NA	NA	ns	No clock reference. Note 5. IDE_IRQ0 and IDE_DREQ0 are only used for DMA.

Note 1. Per the ATA/ATAPI-6 spec, these signals utilize Output Reference Timing (see Figure 7-3 on page 581) relative to IDE_IOR0# and IDE_IOW0#. However, the IDE Controller uses the MHZ66_CLK edges to make output changes, that when taken together, meet all the timing requirements of the referenced spec. Therefore, t_{VAL} times are specified and tested relative to the MHZ66_CLK.

Note 2. t_{VAL} min times with load of: 15 pF cap to ground.
t_{VAL} max times with load of: 40 pF cap to ground.

Note 3. Per the ATA/ATAPI-6 spec, IDE_DATA write signals utilize *Output Reference Timing* (see Figure 7-3 on page 581) relative to IDE_IOW0#. However, the IDE Controller uses the MHZ66_CLK edges to make output changes, and when taken together, meet all the timing requirements of the referenced spec. See Figure 7-5 "IDE Data In Timing Non-UltraDMA" on page 586

Note 4. Per the ATA/ATAPI-6 spec, these signals utilize *Input Reference Timing* (see Figure 7-4 on page 581) relative to IDE_IOR0#. However, the IDE Controller samples the inputs with the MHZ66_CLK at the appropriate points in time to meet all the timing requirements of the referenced spec. See Figure 7-5 on page 586.

Note 5. For IDE_IRQ0, GPIO2 configured: Aux In and Input Enable = 1; Output Enable, Aux Out 1, and Aux Out 2 = 0.

Downloaded from Arrow.com.

Read Operations

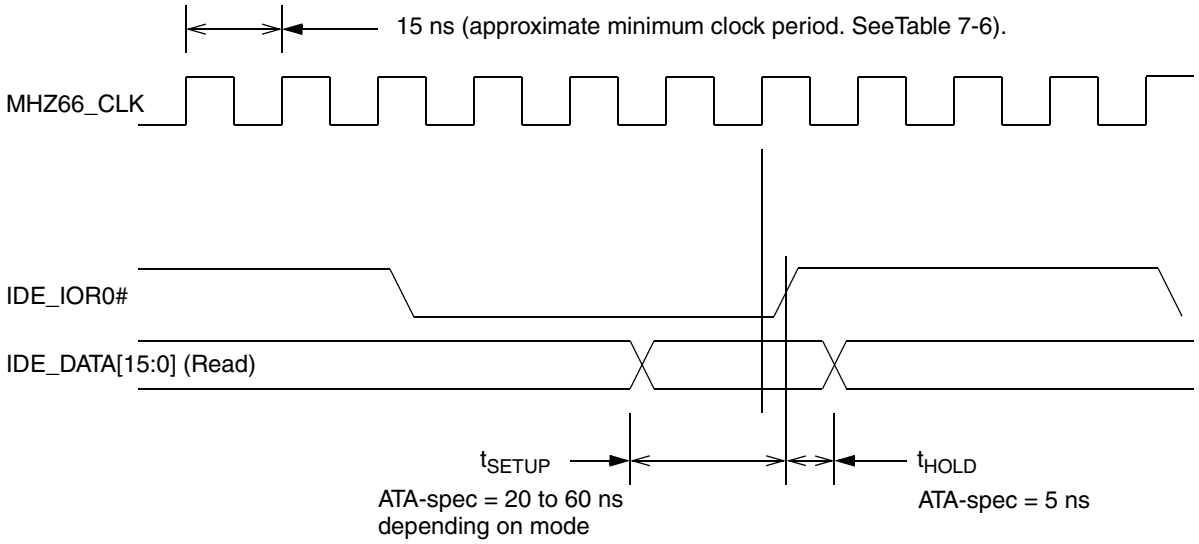

Write Operations

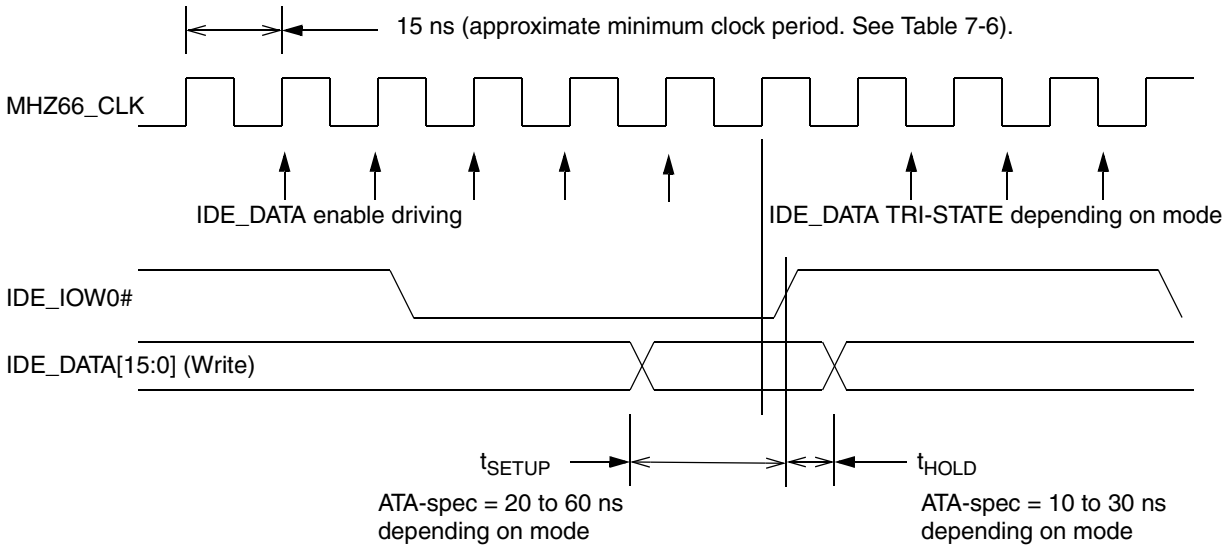

Figure 7-5. IDE Data In Timing Non-UltraDMA

Downloaded from Arrow.com.

Table 7-10. IDE UltraDMA Data Out Timing Parameters

Signal	Parameter	Min	Max	Units	Comment/Condition
IDE_DACK0# IDE_HDMA_DS, IDE_STOP, IDE_IOW0#	t_{VAL}	2	10	ns	In Ultra DMA mode, the IDE_IOR0# signal is redefined as IDE_HDMA_DS. Note 1 and Note 2.
IDE_DATA[15:0]	t_{VAL}	See Notes		ns	Note 2 and Note 3.
IDE_DREQ0	Async Input	NA	NA	ns	No clock reference. Note 4.
IDE_DDMA_RDY	Async Input	NA	NA	ns	In Ultra DMA mode, the IDE_RDY0 signal is redefined as IDE_DDMA_RDY. Note 4.
IDE_IRQ0	Async Input	NA	NA	ns	Note 4 and Note 5.

Note 1. Per the ATA/ATAPI-6 spec, these signals utilize Output Reference Timing (see Figure 7-3 on page 581) relative to IDE_IOR0# and IDE_IOW0#. However, the IDE Controller uses the MHZ66_CLK edges to make output changes, that when taken together, meet all the timing requirements of the referenced spec. Therefore, t_{VAL} times are specified and tested relative to the MHZ66_CLK.

Note 2. t_{VAL} min times with load of: 15 pF cap to ground.
t_{VAL} max times with load of: 40 pF cap to ground.

Note 3. This signal uses *Output Reference Timing* (see Figure 7-3 on page 581). Figure 7-6 illustrates IDE_HDMA_DS and IDE_DATA[15:0] relationship.

Note 4. Per the ATA/ATAPI-6 spec, these signals utilize *Input Reference Timing* (see Figure 7-4 on page 581) relative to IDE_IOR0#. However, the IDE Controller samples the inputs with the MHZ66_CLK at the appropriate points in time to meet all the timing requirements of the referenced spec.

Note 5. For IDE_IRQ0, GPIO2 configured: IN_AUX1 and Input Enable = 1; Output Enable, OUT_AUX1, and OUT_AUX2 = 0.

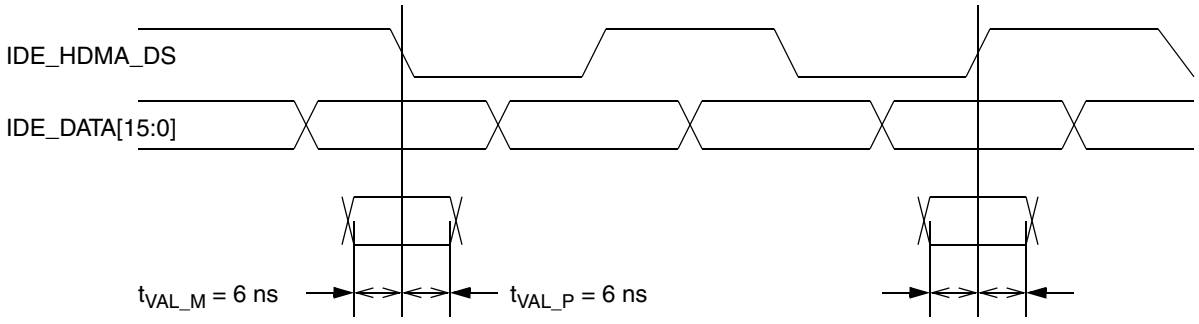

Figure 7-6. IDE UltraDMA Data Out Timing

Downloaded from Arrow.com.

Table 7-11. IDE UltraDMA Data In Timing Parameters

Signal	Parameter	Min	Max	Units	Comment/Condition
IDE_DACK0#, IDE_HDMA_RDY, IDE_STOP, IDE_IOW0	t_{VAL}	2	10	ns	In Ultra DMA mode, the IDE_IOR0# signal is redefined as IDE_HDMA_RDY. Note 1 and Note 2.
IDE_DDMA_DS	Async Input	NA	NA	ns	In Ultra DMA mode, the IDE_RDY0 signal is redefined as IDE_DDMA_DS. Note 3.
IDE_DATA[15:0]	Sync to IDE_DDMA_DS	see Note		ns	Note 3.
IDE_DREQ0	Async Input	NA	NA	ns	No clock reference. Note 4.
IDE_IRQ0	Async Input	NA	NA	ns	Note 4 and Note 5.

Note 1. Per the ATA/ATAPI-6 spec, these signals utilize Output Reference Timing (see Figure 7-3 on page 581) relative to IDE_IOR0# and IDE_IOW0#. However, the IDE Controller uses the MHZ66_CLK edges to make output changes, that when taken together, meet all the timing requirements of the referenced spec. Therefore, t_{VAL} times are specified and tested relative to the MHZ66_CLK.

Note 2. t_{VAL} min times with load of: 15 pF cap to ground.
t_{VAL} max times with load of: 40 pF cap to ground.

Note 3. These signals use *Input Reference Timing* (see Figure 7-4 on page 581). Figure 7-7 illustrates their relationship and specified setup and hold times.

Note 4. Per the ATA/ATAPI-6 spec, these signals utilize *Input Reference Timing* (see Figure 7-4 on page 581) relative to IDE_IOR0#. However, the IDE Controller samples the inputs with the MHZ66_CLK at the appropriate points in time to meet all the timing requirements of the referenced spec.

Note 5. For IDE_IRQ0, GPIO2 configured: IN_AUX1 and Input Enable = 1; Output Enable, OUT_AUX1, and OUT_AUX2 = 0.

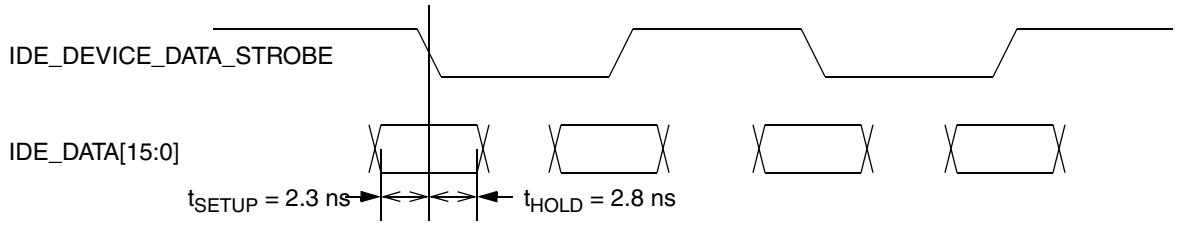

Figure 7-7. IDE UltraDMA Data In Timing

Downloaded from Arrow.com.

7.3.5 IDE Signals in Flash Mode

The signals detailed in this subsection use an “IDE” buffer type. For a detailed explanation of buffer types, see Table 3-4 "Buffer Type Characteristics" on page 33.

In this subsection, unless otherwise noted:

- All timing specifications are specified under the operating conditions listed in Table 7-3 on page 576 (i.e., V_{CORE} and V_{CORE_VSB} = All; V_{IO} and V_{IO_VSB} = All; T_{CASE} = All).
- Signals are referenced to LPC_CLK.
- Signal parameters are defined in Figure 7-2 "AC Reference Timing and Test Definition" on page 580.

Table 7-12. Flash Timing Parameters

Signal	Parameter	Min	Max	Units	Comment/Condition
FLASH_CS[3:0]#, FLASH_RE#, FLASH_WE#, FLASH_ALE, FLASH_CLE, FLASH_AD[9:0], FLASH_IO[7:0] signals and I/Os in Flash output mode	t_{VAL}	2	9	ns	Note 1.
FLASH_IO[7:0] signals and I/Os in Flash input mode except FLASH_IOCHRDY	t_{SETUP}	8	NA	ns	
	t_{HOLD}	0	NA	ns	
FLASH_IOCHRDY	Async Input	NA	NA	ns	No clock reference.

Note 1. t_{VAL} min times with load of: 10 pF cap to ground.
t_{VAL} max times with load of: 50 pF cap to ground.

Downloaded from Arrow.com.

7.3.6 USB Signals

All USB data signals use a USB buffer type. For the AC characteristics of the USB low voltage differential-signal I/O buffers, see the USB Specification Revision 2.0.

All signals detailed in Table 7-13 use a GP24 buffer type. All signals detailed in Table 7-14 use a Bare_Wire buffer type. For a detailed explanation of buffer types, see Table 3-4 "Buffer Type Characteristics" on page 33.

In this subsection, unless otherwise noted:

- All timing specifications are specified under the operating conditions listed in Table 7-3 on page 576 (i.e., V_{CORE} and V_{CORE_VSB} = All; V_{IO} and V_{IO_VSB} = All; T_{CASE} = All).

Table 7-13. USB Power Control Interface Timing Parameters

Signal	Parameter	Min	Max	Units	Comment/Condition
USB_PWR_EN1, USB_PWR_EN2	Async Output	NA	NA	ns	No clock reference.
USB_OC_SENS#	Async Input	NA	NA	ns	No clock reference.

Table 7-14. USB Option and Phy Control Signal Timing Parameters

Signal	Parameter	Min	Max	Units	Comment/Condition
USB_VBUS	Async Input	NA	NA	ns	No clock reference.
USB_PTEST, USB_REXT	Static signals				

Downloaded from Arrow.com.

7.3.7 System Management Bus (SMB) Signals

The signals detailed in this subsection use an “SMB” buffer type. For a detailed explanation of buffer types, see Table 3-4 "Buffer Type Characteristics" on page 33.

The SMB utilizes a two-wire asynchronous protocol. Master and slave devices are connected open-drain with an external pull-up resistor. The SMB_CLK is not a free running fixed frequency signal, but rather a cooperatively generated signal with a minimum low time of 4.7 µs, minimum high time of 4.0 µs, and 100 KHz frequency limit. The minimum frequency is 10 KHz. The SMB_DATA signal is also cooperatively driven. Communication on the SMB is via relative manipulation of these two signals. The SMB Controller and I/O cell incorporated within the CS5536 companion device fully meets the requirements of the SMB specification version 2.0.

In this subsection, unless otherwise noted:

- All timing specifications are specified under the operating conditions listed in Table 7-3 on page 576 (i.e., V_{CORE} and V_{CORE_VSB} = All; V_{IO} and V_{IO_VSB} = All; T_{CASE} = All).

Table 7-15. SMB Timing Parameters

Signal	Parameter	Min	Max	Units	Comment/Condition
Bidirectional SMB_CLK (GPIO14), SMB_DATA (GPIO15)	Async Output or Level	NA	NA	ns	No clock reference.
	Async Input	NA	NA	ns	No clock reference.

Downloaded from Arrow.com.

7.3.8 AC97 Codec Signals

The signals detailed in this subsection use a GP24 buffer type. For a detailed explanation of buffer types, see Table 3-4 "Buffer Type Characteristics" on page 33.

In this subsection, unless otherwise noted:

- All timing specifications are specified under the operating conditions listed in Table 7-3 on page 576 (i.e., V_{CORE} and V_{CORE_VSB} = All; V_{IO} and V_{IO_VSB} = All; T_{CASE} = All).
- Signals are referenced to AC_CLK low-to-high edge.
- Signal parameters are defined in Figure 7-2 "AC Reference Timing and Test Definition" on page 580.

Table 7-16. AC97 Codec Timing Parameters

Signal	Parameter	Min	Max	Units	Comment/Condition
AC_S_OUT, AC_S_SYNC	t_{VAL}	2	15	ns	Note 1.
AC_S_IN, AC_S_IN2 (GPIO12)	t_{SETUP}	10	NA	ns	Note 2 and Note 3.
	t_{HOLD}	10	NA	ns	
AC_BEEP (GPIO1)	t_{VAL}	2	25	ns	Note 1, Note 4 and Note 5.

Note 1. t_{VAL} min times with load of: 10 pF cap to ground.
t_{VAL} max times with load of: 50 pF cap ground.
Note 2. Signals are referenced to AC_CLK high-to-low edge.
Note 3. For AC_S_IN2, GPIO12 configured: (Aux In) and Input Enable = 1; Output Enable, OUT_AUX1, and OUT_AUX2 = 0.
Note 4. Signal is referenced to LPC_CLK low-to-high edge.
Note 5. For AC_BEEP, GPIO1 configured: OUT_AUX1 and Output Enable = 1; Open-drain, OUT_AUX2, and Input Enable = 0.

Downloaded from Arrow.com.

7.3.9 Low Pin Count (LPC) Signals

The signals detailed in this subsection use a “PCI” buffer type except for LPC_CLK, which uses a GP24 buffer type. For a detailed explanation of buffer types, see Table 3-4 "Buffer Type Characteristics" on page 33.

In this subsection, unless otherwise noted:

- All timing specifications are specified under the operating conditions listed in Table 7-3 on page 576 (i.e., V_{CORE} and V_{CORE_VSB} = All; V_{IO} and V_{IO_VSB} = All; T_{CASE} = All).
- Signals are referenced to LPC_CLK low-to-high edge.
- Signal parameters are defined in Figure 7-2 "AC Reference Timing and Test Definition" on page 580.

Table 7-17. LPC Timing Parameters

Signal	Parameter	Min	Max	Units	Comment/Condition
LPC_FRAME#, LPC_AD[3:0], LPC_DRQ#, LPC_SERIRQ	t_{VAL} when signal is an output	2	11	ns	Note 1 and Note 2.
	t_{FLOAT} when signal is an output	NA	11	ns	Note 2 and Note 3.
	t_{ENABLE} when signal is an output	2	NA	ns	Note 2 and Note 4.
	t_{SETUP} when signal is an input	7	NA	ns	Note 2.
	t_{HOLD} when signal is an input	0	NA	ns	Note 2.

Note 1. t_{VAL} min times with load of: 10 pF cap to ground.
t_{VAL} max times with load of: 50 pF cap to ground.
Note 2. All information in this table applies when the following control bits are high in Table 3-6 "DIVIL_BALL_OPT (DIVIL MSR 51400015h)" on page 34: PIN_OPT_LDRQ, PIN_OPT_LIRQ, and PIN_OPT_LALL.
Note 3. t_{FLOAT} with the load of: 10 pF cap to ground.
Note 4. t_{ENABLE} with the load of: 10 pF cap to ground.

Downloaded from Arrow.com.

7.3.10 Power Management and Processor Control Signals

The Power Management Controller (PMC) signals detailed in this subsection use various types of buffers depending upon chip configuration. For a detailed explanation of buffer types, see Table 3-4 "Buffer Type Characteristics" on page 33.

In this subsection, unless otherwise noted:

- All timing specifications are specified under the operating conditions listed in Table 7-3 on page 576 (i.e., V_{CORE} and V_{CORE_VSB} = All; V_{IO} and V_{IO_VSB} = All; T_{CASE} = All).
- No clock reference.

Table 7-18. Power Management and Processor Control Timing Parameters

Signal	Parameter	Min	Max	Units	Comment/Condition
WORKING	Async Output or Level	NA	NA	ns	From PMC.
RESET_OUT#	Sync Output to PCI_CLK	NA	NA	ns	See RESET_OUT# in Table 7-8 on page 584.
THRM_ALRM# (GPIO10)	Async Input	NA	NA	ns	Note 1. To PMC.
SLP_CLK_EN# (GPIO11)	Async Output or Level	NA	NA	ns	Note 2. From PMC.
WORK_AUX (GPIO24)	Async Output or Level	NA	NA	ns	Note 2. From PMC.
LOW_BAT# (GPIO25)	Async Input	NA	NA	ns	Note 1. To PMC.
PWR_BUT# (GPIO28)	Async Input	NA	NA	ns	Note 1. To PMC.
INTR_OUT (GPIO12)	Async Output or Level	NA	NA	ns	Note 2. From PIC device.
SMI_OUT# (GPIO13)	Async Output or Level	NA	NA	ns	Note 2. From GLIU.
SUSP#, SUSPA#	Sync to PCI_CLK	NA	NA	ns	See Table 7-8 on page 584 for SUSP#, SUSPA# data.
IRQ13	Async Input	NA	NA	ns	To PIC device.
SLEEP_X (GPIO7)	Async Output or Level	NA	NA	ns	Note 3. From PMC.
SLEEP_Y (GPIO12)	Async Output or Level	NA	NA	ns	Note 3. From PMC.
SLEEP_BUT (GPIO13)	Async Input	NA	NA	ns	Note 1. To PMC.

Note 1. GPIO configured: IN_AUX1 and Input Enable = 1; Output Enable, OUT_AUX1, and OUT_AUX2 = 0.
Note 2. GPIO configured: IN_AUX1 and Input Enable = 0; Output Enable and OUT_AUX1 = 1; Open-drain and OUT_AUX2 = 0.
Note 3. GPIO configured: IN_AUX1 and Input Enable = 0; Output Enable and OUT_AUX2 = 1; Open-drain and OUT_AUX1 = 0.

Downloaded from Arrow.com.

7.3.11 Miscellaneous Signals

The “recommended use” for GPIO3 and GPIO4 is DDC support signals DDC_SCL and DDC_SDA, because these two GPIOs have a high drive capacity, open-drain output. They use an “SMB” buffer type. The 32 kHZ clock output is a mux option on GPIO27 and uses a GP24 buffer type. For a detailed explanation of buffer types, see Table 3-4 "Buffer Type Characteristics" on page 33.

In this subsection, unless otherwise noted:

- All timing specifications are specified under the operating conditions listed in Table 7-3 on page 576 (i.e., V_{CORE} and V_{CORE_VSB} = All; V_{IO} and V_{IO_VSB} = All; T_{CASE} = All).
- Signals are referenced to KHZ32_XCI high-to-low edge.
- Signal parameters are defined in Figure 7-2 "AC Reference Timing and Test Definition" on page 580.

Table 7-19. Miscellaneous Signals Except UART Timing Parameters

Signal	Parameter	Min	Max	Units	Comment/Condition
DDC_SCL (GPIO3) DDC_SDA (GPIO4)	NA	NA	NA	ns	See Section 7.3.13 "GPIO Signaling" on page 597.
32KHZ (GPIO27)	Frequency	32.768 typ		KHz	Note 1.
	High/Low Time	0.5		µs	

Note 1. GPIO27 configured: IN_AUX1 and Input Enable = 0; Output Enable and OUT_AUX2 = 1; Open-drain and OUT_AUX1 = 0.

Downloaded from Arrow.com.

7.3.12 UART and IR Signaling

The UART support signals detailed in this subsection use various types of buffers depending upon chip configuration. For a detailed explanation of buffer types, see Table 3-4 "Buffer Type Characteristics" on page 33.

In this subsection, unless otherwise noted:

- All timing specifications are specified under the operating conditions listed in Table 7-3 on page 576 (i.e., V_{CORE} and V_{CORE_VSB} = All; V_{IO} and V_{IO_VSB} = All; T_{CASE} = All).
- No clock reference.

Table 7-20. UART Timing Parameters

Signal	Parameter	Min	Max	Units	Comment/Condition
UART1_TX (GPIO8)	Async Output or Level	NA	NA	ns	Note 1.
UART1_IR_TX (GPIO8)	Async Output or Level	NA	NA	ns	Note 2.
UART1_RX (GPIO9)	Async Input	NA	NA	ns	Note 3.
UART2_TX (GPIO4)	Async Output or Level	NA	NA	ns	Note 1.
UART2_RX (GPIO3)	Async Input	NA	NA	ns	Note 3

Note 1. GPIO configured: IN_AUX1 and Input Enable = 0; Output Enable and OUT_AUX1 = 1; Open-drain and OUT_AUX2 = 0.
Note 2. GPIO configured: IN_AUX1 and Input Enable = 0; Output Enable and OUT_AUX2 = 1; Open-drain and OUT_AUX1 = 0.
Note 3. GPIO configured: IN_AUX1 and Input Enable = 1; Output Enable, OUT_AUX1, and OUT_AUX2 = 0.

Downloaded from Arrow.com.

7.3.13 GPIO Signaling

The GPIO signals detailed in this subsection use various types of buffers depending upon chip configuration. For a detailed explanation of buffer types, see Table 3-4 "Buffer Type Characteristics" on page 33.

In this subsection, unless otherwise noted:

- All timing specifications are specified under the operating conditions listed in Table 7-3 on page 576 (i.e., V_{CORE} and V_{CORE_VSB} = All; V_{IO} and V_{IO_VSB} = All; T_{CASE} = All).
- GPIO[22:0] signals are referenced to LPC_CLK and GPIO[28:24] signals are referenced to KHZ32_XCI. Use low-to-high edge if LPC Clock; use high-to-low edge if 32KHz clock.
- GPIO signal parameters are defined in Figure 7-2 "AC Reference Timing and Test Definition" on page 580.

Table 7-21. GPIO Signaling

Signal GPIO[28:24, 22:0]	Parameter	Min	Max	Units	Comment/Condition
GPIO Input [all]	Async Input	NA	NA	ns	No clock reference. Can be read via programmed I/O. Can be used as an interrupt or PME. Note 1 and Note 2
GPIO Output [all]	Async Output	NA	NA	ns	Note 1 and Note 2.

Note 1. GPIO configured: Input Enable = 1; IN_AUX1, Output Enable, OUT_AUX1, and OUT_AUX2 = 0.
Note 2. PIN_OPT_LALL = 0 in Table 3-6 "DIVIL_BALL_OPT (DIVIL MSR 51400015h)" on page 34.

Downloaded from Arrow.com.

7.3.14 MFGPT Signaling

The MFGPT signals detailed in this subsection use various types of buffers depending upon chip configuration. For a detailed explanation of buffer types, see Table 3-4 "Buffer Type Characteristics" on page 33.

In this subsection, unless otherwise noted:

- All timing specifications are specified under the operating conditions listed in Table 7-3 on page 576 (i.e., V_{CORE} and V_{CORE_VSB} = All; V_{IO} and V_{IO_VSB} = All; T_{CASE} = All).
- MFGPT signals are referenced to KHZ32_XCI or MHZ14_CLK depending on MFGPT clock configuration. Use low-to-high edge if MHZ14_CLK; use high-to-low edge if KHZ32_XCI. MFGPT7 supports KHZ32_XCI only.
- MFGPT signal parameters are defined in Figure 7-2 "AC Reference Timing and Test Definition" on page 580.

Table 7-22. MFGPT Signaling

Signal	Parameter	Min	Max	Units	Comment/Condition
Inputs: MFGPT0 (GPIO6) MFGPT1 (GPIO5) MFGPT2 (GPIO21) MFGPT7 (GPIO26)	Async Input	NA	NA	ns	No clock reference. Restarts the MFGPT. Note 1 and Note 2
Outputs: MFGPT0_C1 (GPIO5) MFGPT1_C1 (GPIO6) MFGPT2_C1 (GPIO7) MFGPT7_C1 (GPIO27)	Async Output	NA	NA	ns	Note 2, and Note 3.
Outputs: MFGPT0_C2 (GPIO1) MFGPT1_C2 (GPIO11) MFGPT2_C2 (GPIO6) MFGPT7_C2 (GPIO25)	Async Output	NA	NA	ns	Note 2, and Note 4.

Note 1. GPIO configured: Input Enable and IN_AUX1 = 1; Output Enable, OUT_AUX1, and OUT_AUX2 = 0.
Note 2. PIN_OPT_LALL = 0 in Table 3-6 "DIVIL_BALL_OPT (DIVIL MSR 51400015h)" on page 34.
Note 3. GPIO configured: IN_AUX1, Input Enable = 0; Output Enable = 1; Open-drain = 0; OUT_AUX1 =1; OUT_AUX2 = 0.
Note 4. GPIO configured: IN_AUX1, Input Enable = 0; Output Enable = 1; Open-drain = 0; OUT_AUX1 = 0; OUT_AUX2 = 1.

Downloaded from Arrow.com.

7.3.15 JTAG Signals

The signals detailed in this subsection use a GP24 buffer type. For a detailed explanation of buffer types, see Table 3-4 "Buffer Type Characteristics" on page 33.

In this subsection, unless otherwise noted:

- All timing specifications are specified under the operating conditions listed in Table 7-3 on page 576 (i.e., V_{CORE} and V_{CORE_VSB} = All; V_{IO} and V_{IO_VSB} = All; T_{CASE} = All).
- Signals are referenced to TCK low-to-high edge.
- Signal parameters are defined in Figure 7-2 "AC Reference Timing and Test Definition" on page 580.

Table 7-23. JTAG Timing Parameters

Signal	Parameter	Min	Max	Units	Comment/Condition
TDO	t_{VAL}	2	20	ns	Note 1 and Note 2.
TMS, TDI	t_{SETUP}	10	NA	ns	
	t_{HOLD}	2	NA	ns	

Note 1. t_{VAL} min times with load of: 10 pF cap to ground.
t_{VAL} max times with load of: 50 pF cap to ground.
Note 2. Signal is referenced to TCK high-to-low edge.

Downloaded from Arrow.com.

7.4 Power Supply Sequence Requirements

The voltages applied to the CS5536 companion device are subject to the requirements listed below as well as the requirements of Table 7-3 "Recommended Operating Conditions" on page 576. Reference values “minimum” and “maximum” below should be taken from Table 7-3. If these requirements are not observed, the RTC circuit and/or the LVD circuit may not operate correctly.

7.4.1 Power Supply Connectivity Requirements

1) V_{CORE_USB} must be effectively connected to V_{CORE}. V_{CORE_USB} may be filtered using a ferrite bead/inductor and capacitance, but must be sourced from the same regulator.
2) V_{IO_USB} must be effectively connected to V_{IO}. V_{IO_USB} may be filtered using a ferrite bead/inductor and capacitance, but must be sourced from the same regulator.
3) During normal operation V_{CORE} and V_{CORE_VSB} nominal voltages should be within 0.25 volts of each other. When the system is non-operational, V_{CORE_VSB} may remain powered on with V_{CORE} powered off.
4) During normal operation V_{IO} and V_{IO_VSB} nominal voltages should be within 0.25 volts of each other. When the system is non-operational, V_{IO_VSB} may remain powered on with V_{IO} powered off.

7.4.2 Power Up Requirements

1) V_{CORE_VSB} and V_{IO_VSB} may come up in any order but must meet their respective minimum values within 100 ms of each other.
2) V_{CORE} and V_{CORE_VSB} may be tied together.
3) V_{IO} and V_{IO_VSB} may be tied together
4) If V_{CORE} and V_{CORE_VSB} are not tied together then V_{CORE_VSB} should come up before V_{CORE} comes up.
5) If V_{IO} and V_{IO_VSB} are not tied together then V_{IO_VSB} should come up before V_{IO} comes up.
6) V_{CORE} and V_{IO} may come up in any order but must meet their respective minimum values within 100 ms of each other.
7) From zero volts, V_{CORE} and V_{IO} must ramp up monotonically and reach 90% of their respective minimum values no sooner that 10 µs and no later than 1 second.
8) From zero volts, V_{CORE_VSB} and V_{IO_VSB} must ramp up monotonically and reach 90% of their respective minimum values no sooner that 10 µs and no later than 1 second.

Downloaded from Arrow.com.

7.4.3 Power Down Requirements

Proper power down sequencing is required to insure the battery backed up RAM contents of the RTC is not corrupted. There are three power down procedures that will prevent the corruption. In all three cases a voltage or signal must become low before the other voltages begin to go low.

7.4.3.1 RESET_STAND# Controlled Power Down

RESET_STAND# can be used to protect the RTC RAM contents during a power down. Once RESET_STAND# is low for the specified period of time before any voltage begins to go low, the RTC RAM contents are protected. When RESET_STAND# goes low it is assumed that all the voltages are being removed. The voltages can be removed due to the system being unplugged or from pressing a power switch which removes all voltage sources from the CS5536. Figure 7-8 shows the timing relationships between RESET_STAND# and the other voltages.

1) All voltages should achieve V_{DOWN} before power is reapplied.

2) t_{FALL} maximum is specified in order to achieve an overall reasonable power down time. Having a t_{FALL} larger then the maximum will not cause problems as long as the slope is monotonic. t_{FALL} can be up to 5 seconds.

Table 7-24. RESET_STAND# Timing

Parameter	Min	Max	Comment/Condition
V_{IO_MIN}			See Table 7-3 "Recommended Operating Conditions" on page 576.
V_{CORE_MIN}			See Table 7-3 "Recommended Operating Conditions" on page 576.
V_{DOWN}	0.4V		
t_{FALL}	500 µs	100 ms	Slope must be monotonic.
t_{SP}	2.5 ms	100 ms	
t_{RS_FALL}	NA	NA	RESET_STAND# must be low for at least 150 ns to be recognized.
t_{IO}	0 ms	100 ms	
t_{CORE}	0 ms	100 ms	

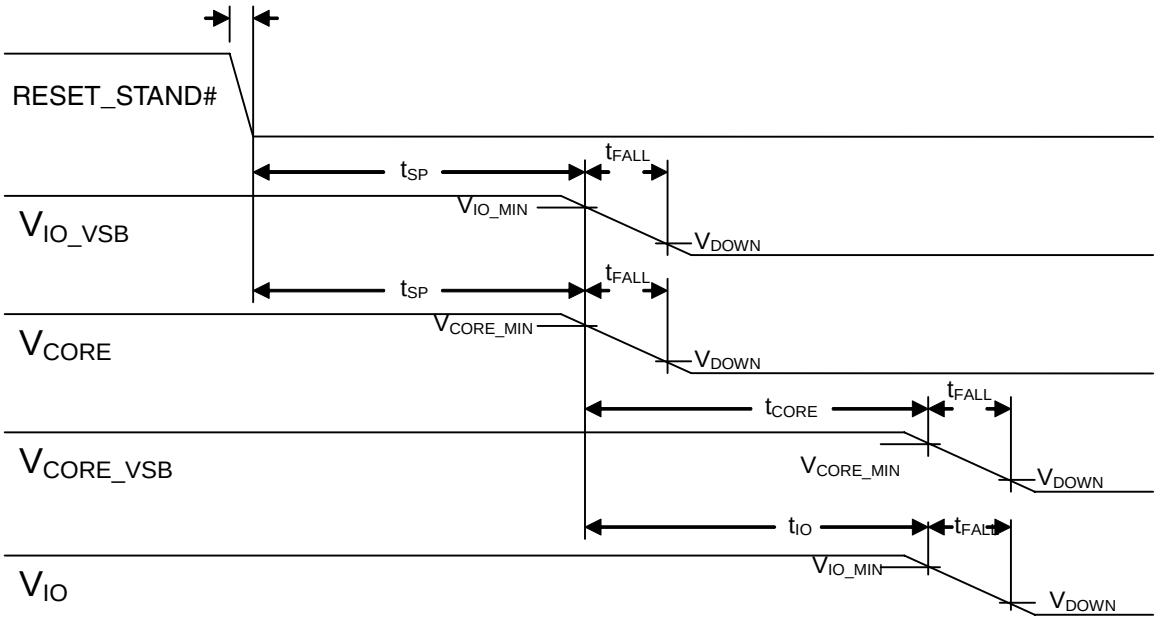

Figure 7-8. RESET_STAND# Timing Diagram

Downloaded from Arrow.com.

7.4.3.2 V_{CORE} Controlled Power Down

In this procedure, V_{CORE} is the first voltage to go down when power is removed. Since V_{CORE} is the first voltage to be removed, V_{IO_VSB} and V_{CORE_VSB} can remain on indefinitely. However, V_{IO} must be removed. The voltages can be removed due to the system being unplugged, which removes all of the voltage sources or from pressing a power switch which removes all voltage sources or only V_{CORE} and V_{IO} from the CS5536. Once V_{CORE} is low, the RTC RAM contents are protected from corruption. Figure 7-9 on page 602 shows the timing relationships between V_{CORE} and the other voltages.

1) V_{CORE} and V_{IO} must achieve V_{DOWN} before power is reapplied.
2) If V_{CORE_VSB} and V_{IO_VSB} voltages are removed they must achieve V_{DOWN} before power is reapplied.
3) t_{FALL} maximum is specified in order to achieve an overall reasonable power down time. Having a t_{FALL} larger then the maximum will not cause problems as long as the slope is monotonic. t_{FALL} can be up to 5 seconds.

Table 7-25. V_{CORE} Timing

Parameter	Min	Max	Comment/Condition
V_{IO_MIN}			See Table 7-3 "Recommended Operating Conditions" on page 576.
V_{CORE_MIN}			See Table 7-3 "Recommended Operating Conditions" on page 576.
V_{DOWN}	0.4V		
t_{FALL}	500 µS	100 ms	Slope must be monotonic.
t_{SP}	2.5 ms	Infinite	
t_{IO}	0 ms	100 ms	
t_{CORE_VSB}	0 ms	100 ms	

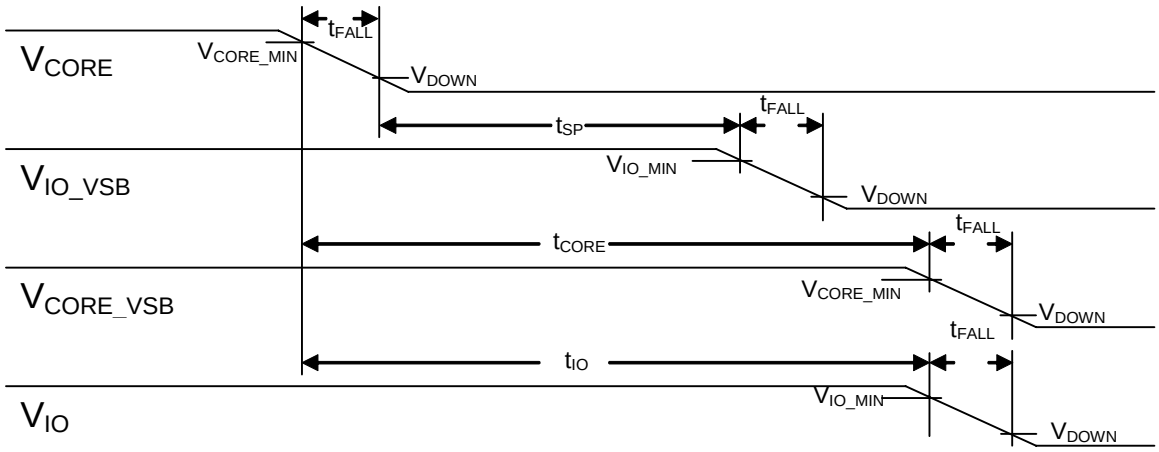

Figure 7-9. V_{CORE} Timing Diagram

Downloaded from Arrow.com.

7.4.3.3 V_{IO_VSB} Controlled Power Down

In this procedure, V_{IO_VSB} is the first voltage to go down when power is removed. Since V_{IO_VSB} is the first voltage to be removed, it is assumed that all the voltages are being removed. The voltages can be removed due to the system being unplugged or from pressing a power switch which removes all voltage sources from the CS5536. Once V_{IO_VSB} is low, the RTC RAM contents are protected from corruption. Figure 7-10 on page 603 shows the timing relationships between V_{IO_VSB} and the other voltages.

1) All voltages should achieve V_{DOWN} before power is reapplied.
2) t_{FALL} maximum is specified in order to achieve an overall reasonable power down time. Having a t_{FALL} larger then the maximum will not cause problems as long as the slope is monotonic. t_{FALL} can be up to 5 seconds.

Table 7-26. V_{IO_VSB} Timing

Parameter	Min	Max	Comment/Condition
V_{IO_MIN}			See Table 7-3 "Recommended Operating Conditions" on page 576.
V_{CORE_MIN}			See Table 7-3 "Recommended Operating Conditions" on page 576.
V_{DOWN}	0.4V		
t_{FALL}	500 µS	100 ms	Slope must be monotonic.
t_{SP}	2.5 ms	100 ms	
t_{IO}	0 ms	100 ms	
t_{CORE}	0 ms	100 ms	

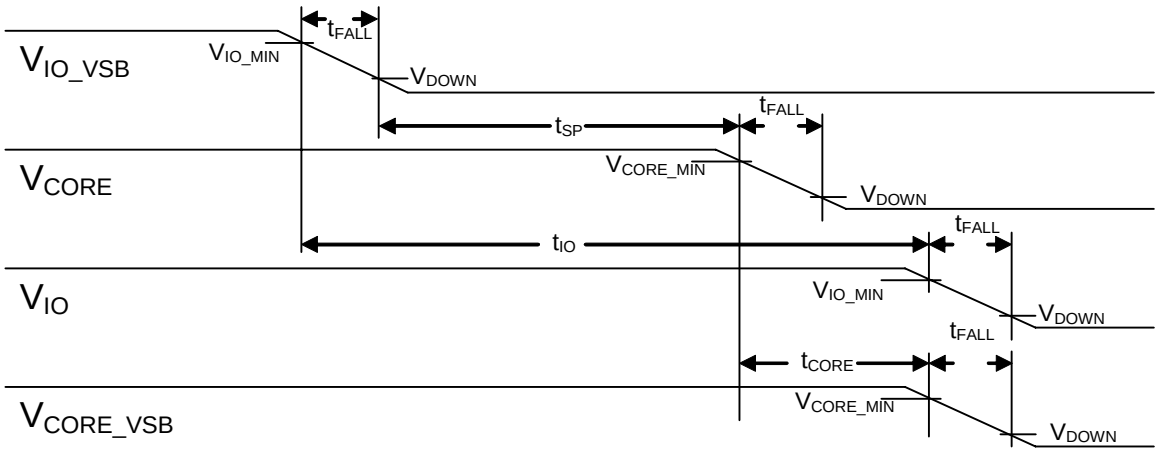

Figure 7-10. V_{IO_VSB} Timing Diagram

Downloaded from Arrow.com.

7.5 Low Voltage Detect (LVD) Parameters

The LVD electrical parameters are defined in Figure 7-11 and listed in Table 7-27. Use of internal signals power_good_standby and power_good_working is illustrated in Figure 4-5 "Reset Logic" on page 66.

In this subsection, unless otherwise noted:

- All timing specifications are specified under the operating conditions listed in Table 7-3 on page 576 (i.e., V_{CORE} (VDD) and V_{CORE_VSB} (VDD_VSB) = All; V_{IO} (VDDIO) and V_{IO_VSB} (VDDIO_VSB) = All; T_{CASE} = All).
- The LVD circuit incorporates no clock signals.

For improved noise immunity the LVD circuit implements a debounce block which rejects any output glitch of the comparator block of less than 150 ns (see Figure 7-12).

Table 7-27. LVD Parameters

Signal	Parameter	Min	Max	Units	Comment/Condition
power_good_standby	$V_{RISING_TRIP_CORE_VSB}$	0.8	1.0	V	
	$V_{FALLING_TRIP_CORE_VSB}$				
	$V_{RISING_TRIP_IO_VSB}$	2.0	3.0		
	$V_{FALLING_TRIP_IO_VSB}$				
power_good_working	$V_{RISING_TRIP_CORE}$	0.8	1.0		
	$V_{FALLING_TRIP_CORE}$				

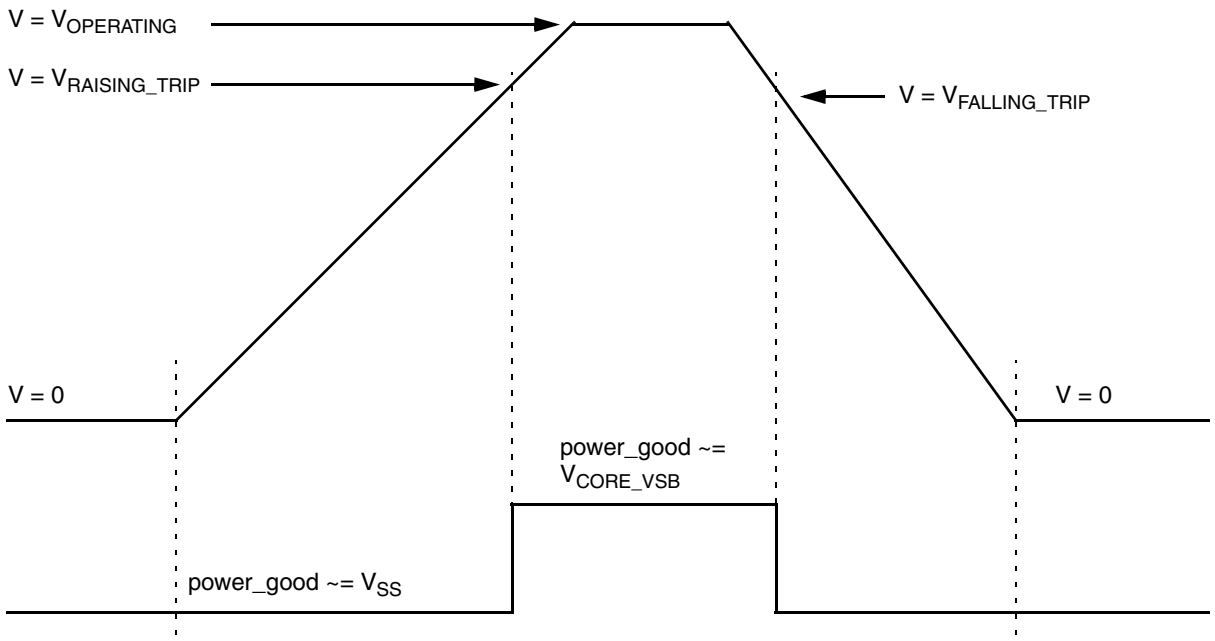

Figure 7-11. LVD Electrical Parameter Definitions

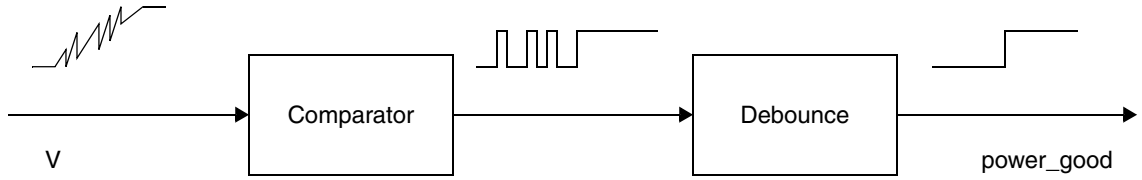

Figure 7-12. Debounce Functionality

Downloaded from Arrow.com.

7.6 Skip Parameter

The Skip electrical parameters are defined in Figure 7-13 and listed in Table 7-28. In this subsection, unless otherwise noted: All timing specifications are specified under the operating conditions listed in Table 7-3 on page 576 (i.e., V_{CORE} and V_{CORE_VSB} = All; V_{IO} and V_{IO_VSB} = All; T_{CASE} = All).

Table 7-28. Skip Parameters

Parameter	Min	Max	Units	Comment/Condition
PWR_BUT# Low Time	1		µs	To enable Skip, PWR_BUT# must be held low for at least one microsecond.

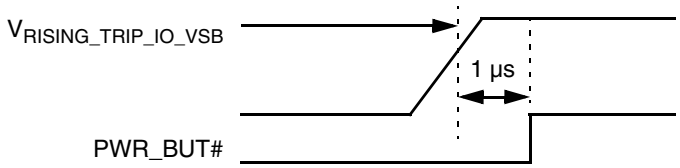

Figure 7-13. Skip Electrical Parameters

Downloaded from Arrow.com.

Downloaded from Arrow.com.

8 Package Specifications

The AMD Geode™ C5536 companion device is packaged in a 208-terminal PBGA (plastic ball grid array).

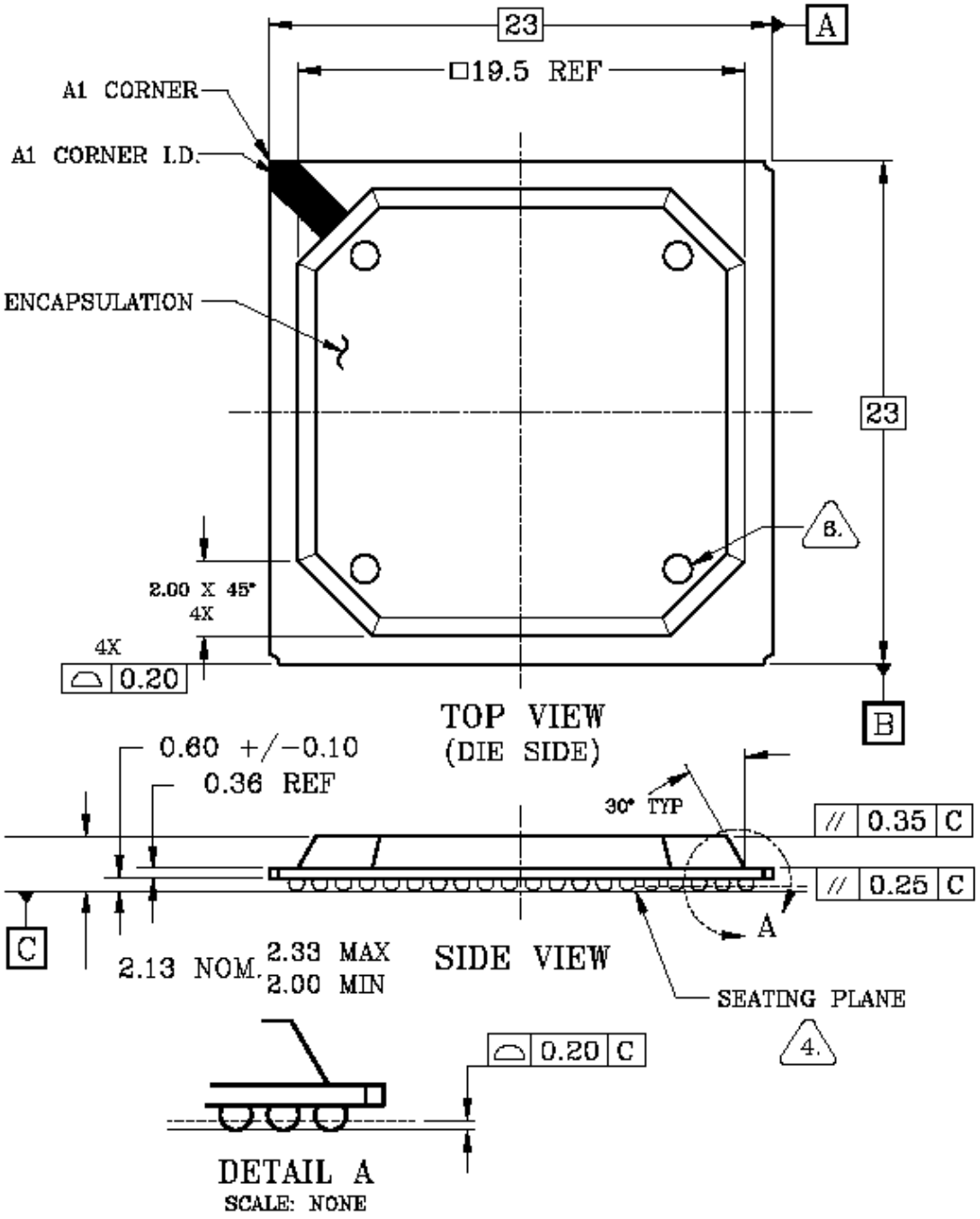

Figure 8-1. PBGA 208 Top View/Dimensions

Downloaded from Arrow.com.

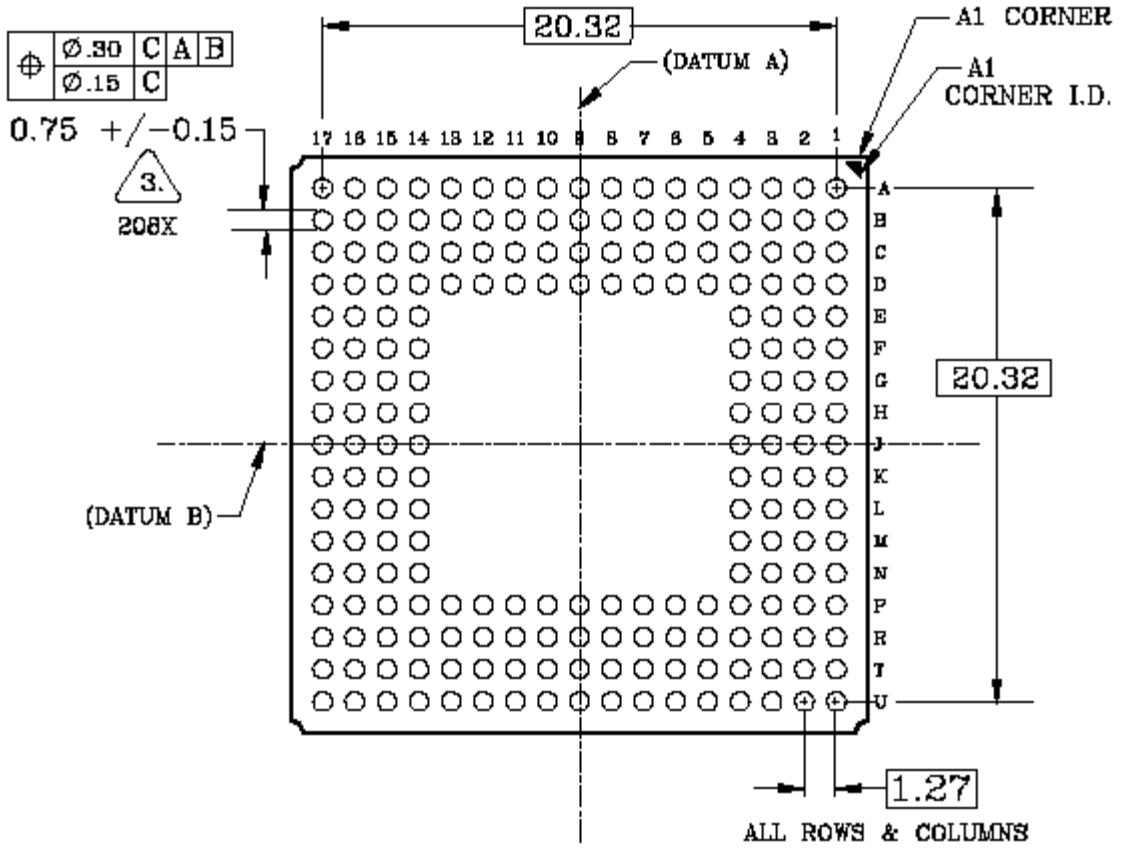

BOTTOM VIEW

1. DIMENSIONING AND TOLERANCING CONFORM TO ASME Y14.5M−1994. CONFORM TO ASME Y14.5M−1994.
2. ALL DIMENSIONS ARE IN MILLIMETERS.
3. DIMENSION "b" IS MEASURED AT THE MAXIMUM SOLDER BALL DIAMETER ON A PLANE PARALLEL TO DATUM C.
4. DATUM C AND SEATING PLANE ARE DEFINED BY THE SPHERICAL CROWNS OF THE SOLDER BALLS.
5. CONFORMS TO JEP−95, MS−034, VARIATION BAJ−2
6. OPTIONAL FEATURES.

Figure 8-2. PBGA 208 Bottom View/Dimensions

Downloaded from Arrow.com.

A Support Documentation

A.1 Order Information

Ordering information for the AMD Geode™ CS5536 companion device is contained in this section. The ordering part number (OPN) is formed by a combination of elements. An example of the OPN is shown in Figure A-1. Valid OPN combinations are provided in Table A-1.

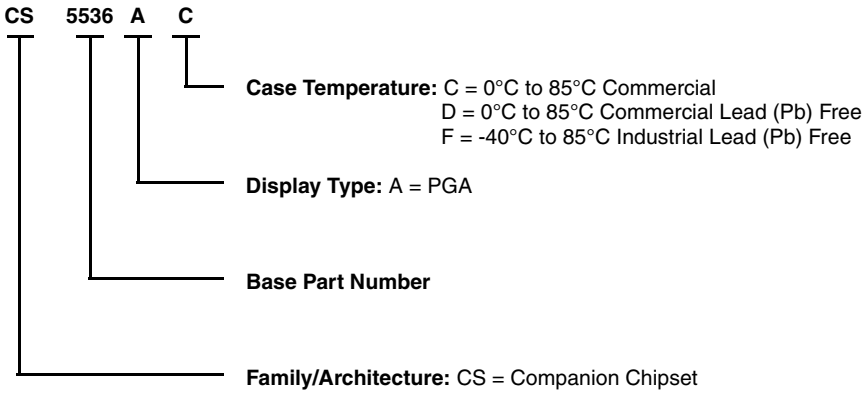

Note: Spaces are added to the ordering number shown above for viewing clarity only.

Figure A-1. AMD Geode™ CS5536 Companion Device OPN Example

Table A-1. Valid OPN Combinations

Order Number	Package
CS5536AC	Commercial PBGA
CS5536AD	Commercial Lead (Pb) Free PBGA
CS5536AF	Industrial Lead (Pb) Free PBGA **Note:** The CS5536 industrial temperature companion device is designed to be used only with the AMD Geode™ LX 800@0.9W industrial temperature processor.

*The AMD Geode LX 800@0.9W processor operates at 500 MHz. Model numbers reflect performance as described here: http://www.amd.com/connectivitysolutions/geodelxbenchmark.

Downloaded from Arrow.com.

A.2 Data Book Revision History

This document is a report of the revision/creation process of the data book for the AMD Geode™ CS5536 companion device. Any revision (i.e., additions, deletions, parameter corrections, etc.) are recorded in the table(s) below.

Table A-2. Revision History

Revision # (PDF Date)	Revisions / Comments
0.1 (April 2004)	Advance Information.
0.5 (Sept. 2004)	Added Functional and Register sections and Electrical and Mechanical sections. Engineering edits.
A (May 2005)	Engineering edits.
B (May 2005)	Engineering edits.
C (July 2005)	Engineering edits.
D (August 2005)	Engineering edits.
E (January 2006)	Removed USB OTG functionality and other engineering edits.
F (March 2006)	Engineering edits. See rev F for details.
G (May 2007)	Updated to reflect 1.4V core operation, industrial temperature range values and other miscellaneous edits/corrections. See Table A-3 for details.

Table A-3. Edits to Current Revision

Section	Revision
Section 1.0 "Overview"	
Section 1.2 "Features"	• General Features on page 14: — Added 1.40V to third bullet (i.e, 3.3V I/O and 1.20V/1.25V/1.40V (nominal) Core operation). — Added new bullet regarding commercial and industrial temperature ranges supported.
Section 2.0 "Architecture Overview"	
Opening Paragraph	• Corrected cross-reference in last sentence (was to a table, changed to a section number).
Section 2.2 "GeodeLink™ Control Processor"	• Fixed last sentence of second paragraph - missing text.
Section 3.0 "Signal Definitions"	
Section 3.2 "Signal Descriptions"	• Section 3.2.1 "System Interface Signals": — Modified V_{BAT} description. • Section 3.2.2 "PCI Interface Signals": — In descriptions for FRAME#, DEVSEL#, IRDY#, TRDY#, and STOP# corrected “10K to 15K W external pull-up” to 10K to 15K ohm external pull-up”.
Section 5.0 "Module Functional Descriptions"	
Section 5.11 "System Management Bus Controller"	• Table 5-19 "SMB Native Registers Map" on page 130: — Corrected register and bit names/format. • Master Receive on page 131: — Modified last paragraph and changed to step 4.

Downloaded from Arrow.com.

Table A-3. Edits to Current Revision (Continued)

Section	Revision
Section 5.15 "General Purpose Input/Output"	• Section 5.15.1 "Programming for Recommended Functions" on page 157: — Added missing text in example (was missing below LOW_BAT_L). • Figure 5-48 "GPIO Configuration" on page 159: — Modified figure (upper left corner). • Section 5.15.5.6 "Auto-sense" on page 162: — Added new text regarding disabling auto-sense.
Section 5.17 "Power Management Control"	• Figure 5-34 "Supported ACPI Power Management States" on page 169: — Rearranged columns for easier reading (no text changes).
Section 5.20 "Test Controller"	• Table 5-38 "TAP Controller Instructions" on page 191: — Corrected bit names (i.e., changed prefix MB to GL).
Section 6.0 "Register Descriptions"	
Section 6.10 "System Management Bus Register Descriptions"	• Added "**Note:** This register must be read as a byte only. Do not combine by using WORD or DWORD access." to: — Section 6.10.1.2 "SMB Status (SMB_STS)" on page 395. — Section 6.10.1.3 "SMB Control Status (SMB_CTRL_STS)" on page 397. — Section 6.10.1.4 "SMB Control 1 (SMB_CTRL1)" on page 398.
Section 6.15 "Real-Time Clock Register Descriptions"	• Section 6.15.2.15 "Date of Month Alarm (RTC_DOMA)" on page 478: — Corrected Reset Value to C0h (was 00h). • Section 6.15.2.16 "Month Alarm (RTC_MONA)" on page 479: — Corrected Reset Value to C0h (was 00h).
Section 6.16 "GPIO Device Register Descriptions"	• Section 6.16.2.7 "GPIO Pull-Up Enable (GPIO[x]_PU_EN)" on page 489: — Corrected third sentence to say "The reset value forces all the pull-ups to be enabled." (Did say "to be disabled."
Section 7.0 "Electrical Specifications"	
Section 7.1.3 "Absolute Maximum Ratings"	• Table 7-2 "Absolute Maximum Ratings" on page 575: — Changed Core Supply Max value from 1.4V to 1.45V. — Added industrial temperature values to T_{CASE},
Section 7.1.4 "Recommended Operating Conditions"	• Table 7-3 "Recommended Operating Conditions" on page 576: — Changed Typ and Max V_{CORE}, V_{CORE_USB} Core Supply Voltage, Working Domain values to 1.40V and 1.44V, respectively. — Changed Typ and Max V_{CORE_VSB} Core Supply Voltage, Standby Domain values to 1.20/12.5/1.40V and 1.44V, respectively.
Section 7.1.5 "Current Consumption"	• Table 7-4 "Current Consumption" on page 577: — Changed TDP to 0.65W. — Changed Abs Max I_{CORE_ON}, $I_{CORE_USB_ON}$, I_{CORE_Sleep}, and $I_{CORE_VSB_Sleep}$ values to 65 mA, 100 mA, 26 mA, and <1.5 mA, respectively.
Section 7.4 "Power Supply Sequence Requirements"	• This section was totally re-written.
Section Appendix A "Support Documentation"	
Section A.1 "Order Information"	• Updated Figure A-1 "AMD Geode™ CS5536 Companion Device OPN Example" and Table A-1 "Valid OPN Combinations" on page 609 with industrial temperature range values.

Downloaded from Arrow.com.



www.amd.com

One AMD Place • P.O. Box 3453 • Sunnyvale, CA 94088-3453 USA • Tel: 408-749-4000 or 800-538-8450 • TWX: 910-339-9280 • TELEX: 34-6306

Downloaded from Arrow.com.