33360d_geodecs5536_pb.qxd 1/17/06 1:19 PM Page 1

AMD Geode™ CS5536 Companion Device

AMD

Ultimate System-Level Solution

AMD Geode™

Complementary tool for optimized high-performance, low-power processing



Product overview

The AMD Geode™ CS5536 companion device works with both the AMD Geode™ LX and AMD Geode™ GX processor families to create today's leading high-performance, low-power x86 solution for embedded applications, ranging from thin clients and digital set-top boxes to single-board computers and Personal Access Devices (PADs).

Architecture maximized for performance

The AMD Geode CS5536 companion device leverages a single, high-performance modular structure based on AMD GeodeLink™ architecture. This configuration provides internal data speeds above 1 GB/second, and highly versatile internal power management.

The AMD Geode CS5536 companion device is optimized to work with the AMD Geode LX and GX processors to deliver an integrated solution with the highest power/performance ratio available in the industry today. The companion device contains state-of-the-industry power management technology that enables end products – especially battery-powered systems – to operate with reduced power consumption.

A complete design solution

Together with the AMD Geode LX and GX processors, the AMD Geode CS5536 companion device gives designers a complete processing solution for developing a variety of end-user devices that require high-performance x86-based processing and low power usage. The companion device complements the features built into the AMD Geode LX and GX processors, and includes integrated controllers for audio, hard disk drive (ATA-6), USB 2.0, power management, and more – all based on the innovative GeodeLink architecture.

The AMD Geode CS5536 companion device supports the latest high-speed USB 2.0 standard.

HI-SPEED CERTIFIED USB

Design versatility: the features and capabilities to create with freedom

The AMD Geode™ CS5536 companion device incorporates a full suite of advanced features to enable designers to achieve new levels of performance and creativity with x86-based devices. The companion device contains:

- Versatile I/O functions
- 82xx devices to provide true PC functionality
  - 2 PICs (Programmable Interrupt Controllers)
  - PIT (Programmable Interval Timer) with 3 channels
  - DMA (Direct Memory Access) functions
- Flexible MFGPTs (Multi-Function General Purpose Timers)

General features

- Designed for use with the AMD Geode LX and GX processor families
- 208-Terminal PBGA (Plastic Ball Grid Array) package with internal heatspreader
- 1.2V or 1.25V (nominal) core operation
- Working and Standby power domains
- IEEE 1149.1-compliant TAP and boundary scan

Technical specifications

- **GeodeLink™ PCI Bridge (South Bridge)**
  - PCI v2.2 compliant
  - 32-bit 33/66MHz operation
- **GeodeLink™ Control Processor**
  - SUSP#/SUSPA# handshake with power management logic provides Sleep control of all GeodeLink devices

33360d_geodecs5536_pb.qxd 1/17/06 1:19 PM Page 2

AMD Geode™ CS5536 Companion Device

- **GeodeLink™ Interface Unit**
  - 64-bit, 66MHz operation
  - PCI VSM (Virtual System Module) that makes the interface transparent to applications software and BIOS
  - Programmable routing descriptors, use and activity monitors, and SSMI (Synchronous System Management Interrupt)
- **ATA-6 Controller**
  - 100 MB/second IDE Controller in UDMA mode per the ATA-6 specification
  - 5V interface
- **Flash Interface**
  - Multiplexed with IDE interface
  - Connects to an array of industry-standard NAND Flash and/or NOR Flash
- **USB Controller**
  - 4 USB ports
    - Supports both USB 1.1 and USB 2.0
    - 3 host ports
    - 1 host/device
- **Audio Codec 97 (AC97) Controller**
  - AC97 specification v2.3 compliant interface to multiple audio codecs: Serial In, Serial Out, Sync Out, Bit Clock In
  - Legacy "PC Beep" support

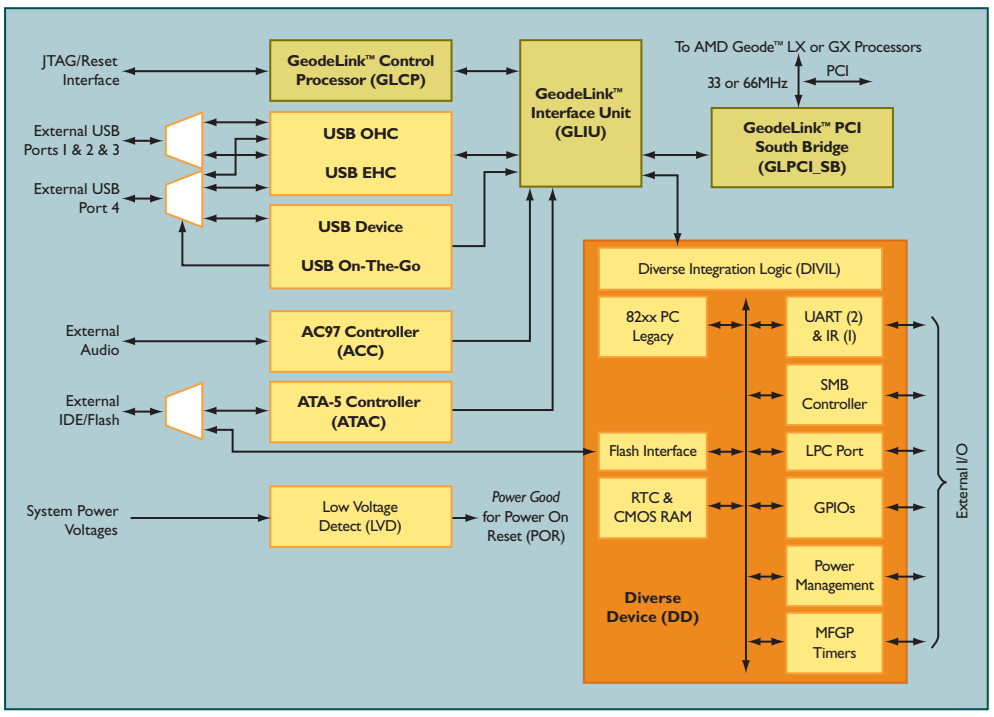

- **Diverse Device**
  - 82xx Legacy Devices
  - IR Communication Port
  - System Management Bus (SMB) Controller
  - LPC (Low Pin Count) Port
  - General Purpose I/Os (GPIOs)
  - 8 Multi-Function General Purpose Timers (MFGPTs)
  - Real-Time Clock (RTC) with CMOS RAM
  - Power Management Controller
    - ACPI v2.0 compliant

Ordering Information

- OPN: CS5536AC, CS5536AD

About AMD
AMD (NYSE:AMD) designs and produces innovative microprocessors, Flash memory devices and low-power processor solutions for the computer, communications and consumer electronics industries. AMD is dedicated to delivering standards-based, customer-focused solutions for technology users, ranging from enterprises and governments to individual consumers.

For more information visit www.amd.com.

For more information, please visit **www.amd.com/cs5536**

AMD

www.amd.com

One AMD Place
P.O. Box 3453
Sunnyvale, CA 94088-3453, USA
Tel: 408-749-4000 or 800-538-8450
TWX: 910-339-9280
TELEX: 34-6306

Technical Support
USA & Canada: 800-222-9323, Opt 2 or 408-749-5703
USA & Canada PC Processors Only: 408-749-3060
USA & Canada E-mail: hw.support@amd.com

Latin America E-mail (Spanish): amdsp@vermont.com.br
Latin America E-mail (Portuguese): amdbr@vermont.com.br
Argentina: 0800-333-0219
Brazil: 0800-557686
Chile: 123-00-209-110
Mexico: 01-800-123-4709

Europe & UK: +44-0-1276-803299
Europe & UK Fax: +44-0-1276-803298
France: 0800-908-621
Germany: +49-89-450-53199
Italy: 800-877224
Europe E-mail: euro.tech@amd.com

China Fax: 86-10-8518-1777
Hong Kong Fax: 852-2956-0588
Japan Fax: 81-3-3346-7848
Korea Fax: 82-2-3468-2601
Taiwan Fax: 886-2-2655-7855

Asia E-mail: asia.support@amd.com

Literature Ordering
On the Web: www.amd.com/support/literature.html
USA & Canada: 800-222-9323, Opt 1
USA & Canada E-mail: amdliterature@comac.com
Europe E-mail: euro.lit@amd.com

China Fax: 86-10-8518-1777
Hong Kong Fax: 852-2956-0588
Japan Fax: 81-3-3346-7848
Taiwan Fax: 886-2-2655-7855

©2006 Advanced Micro Devices, Inc. All rights reserved. AMD, the AMD Arrow Logo, Geode, and combinations thereof, and GeodeLink are trademarks of Advanced Micro Devices, Inc. Other names are for informational purposes only and may be trademarks of their respective owners.

RECYCLED & RECYCLABLE

33360D