

AMD Family 10h
Server and Workstation Processor
Power and Thermal Data Sheet

Publication # **43374**
Revision: **3.19**
Issue Date: **June 2010**

© 2009, 2010 Advanced Micro Devices, Inc. All rights reserved.
The contents of this document are provided in connection with Advanced Micro Devices, Inc. (“AMD”) products. AMD makes no representations or warranties with respect to the accuracy or completeness of the contents of this publication and reserves the right to make changes to specifications and product descriptions at any time without notice. The information contained herein may be of a preliminary or advance nature and is subject to change without notice. No license, whether express, implied, arising by estoppel or otherwise, to any intellectual property rights is granted by this publication. Except as set forth in AMD’s Standard Terms and Conditions of Sale, AMD assumes no liability whatsoever, and disclaims any express or implied warranty, relating to its products including, but not limited to, the implied warranty of merchantability, fitness for a particular purpose, or infringement of any intellectual property right.

AMD’s products are not designed, intended, authorized or warranted for use as components in systems intended for surgical implant into the body, or in other applications intended to support or sustain life, or in any other application in which the failure of AMD’s product could create a situation where personal injury, death, or severe property or environmental damage may occur. AMD reserves the right to discontinue or make changes to its products at any time without notice.

Trademarks

AMD, the AMD Arrow logo, AMD Opteron, and combinations thereof are trademarks of Advanced Micro Devices, Inc.

Microsoft and Windows Vista are registered trademarks of the Microsoft Corporation.

HyperTransport is a licensed trademark of the HyperTransport Technology Consortium.

Other product names used in this publication are for identification purposes only and may be trademarks of their respective companies.

Table of Contents

Revision History 7

1 Overview 8
1.1 Organization 8
1.1.1 Ordering Part Number Description Section Overview 8
1.1.2 Thermal and Power Table Guide Overview 8
1.1.3 Thermal and Power Table Section Overview 9
1.1.4 Power Supply Specification Chapter Overview 9
1.1.5 Power Limit Encoding Chapter Overview 9
1.2 Conventions 9
1.3 Definitions 10

2 AMD Opteron™ Processor 12
2.1 AMD Opteron™ Processor Ordering Part Number Description 12
2.2 AMD Opteron Processor Thermal and Power Table Guide 28
2.3 AMD Opteron Processor Thermal and Power Specifications 30
2.3.1 OS mmmm PA pnc GC (79 W Server, Fr2 (1207)) Thermal and Power Specifications 31
2.3.2 OS mmmm PA pnc GD (79 W Server, Fr2 (1207)) Thermal and Power Specifications 33
2.3.3 OS mmmm PA pnc GE (79 W Server, Fr2 (1207)) Thermal and Power Specifications 34
2.3.4 OS mmmm WA pnc GC (115 W Server, Fr2 (1207)) Thermal and Power Specifications 36
2.3.5 OE mmmm FM pnc GD (79 W Embedded Server, Fr2 (1207)) Thermal and Power Specifications 37
2.3.6 OS mmmm WE pnc GD (95 W Server, AM2r2) Thermal and Power Specifications 38
2.3.7 OS mmmm WA pnc GE (115 W Server, Fr2 (1207)) Thermal and Power Specifications 39
2.3.8 OS mmmm WA pnc GD (115 W Server, Fr2 (1207)) Thermal and Power Specifications 40
2.3.9 OS mmmm WB pnc GD (115 W Server, AM2r2) Thermal and Power Specifications 42
2.3.10 OS mmmm YA pnc GD (137 W Server, Fr2 (1207)) Thermal and Power Specifications 43
2.3.11 OS mmmm WA pnc GH (115 W Server, Fr2 (1207)) Thermal and Power Specifications 44
2.3.12 OS mmmm PA pnc GH (79 W Server, Fr2 (1207)) Thermal and Power Specifications 46
2.3.13 OS mmmm YA pnc GH (137 W Server, Fr2 (1207)) Thermal and Power Specifications 48
2.3.14 OS mmmm WB pnc GH (115 W Server, AM2r2) Thermal and Power Specifications 49
2.3.15 OE mmmm FM pnc GH (79 W Embedded Server, Fr2 (1207)) Thermal and Power Specifications 51
2.3.16 OS mmmm WA pnc GI (115 W Server, Fr2 (1207)) Thermal and Power Specifications 52

2.3.17 OS mmmm PA pnc GI (79 W Server, Fr2 (1207)) Thermal and Power Specifications 55
2.3.18 OS mmmm YA pnc GI (137 W Server, Fr2 (1207)) Thermal and Power Specifications 57
2.3.19 OS mmmm WH pnc GI (115 W Server, Fr5 (1207)) Thermal and Power Specifications 58
2.3.20 OS mmmm PC pnc GI (79 W Server, Fr5 (1207)) Thermal and Power Specifications 59
2.3.21 OS mmmm YC pnc GI (137 W Server, Fr5 (1207)) Thermal and Power Specifications 60
2.3.22 OS mmmm WG pnc GI (115 W Server, AM3) Thermal and Power Specifications 61
2.3.23 OS mmmm NA pnc GI (60 W Server, Fr5 (1207)) Thermal and Power Specifications 63
2.3.24 OS mmmm WJ pnc GN (115 W Server, Fr6 (1207)) Thermal and Power Specifications 64
2.3.25 OS mmmm PD pnc GN (79 W Server, Fr6 (1207)) Thermal and Power Specifications 66
2.3.26 OS mmmm NB pnc GN (60 W Server, Fr6 (1207)) Thermal and Power Specifications 67
2.3.27 OS mmmm WK pnc GO (115 W Server, G34r1) Thermal and Power Specifications 68
2.3.28 OS mmmm VA pnc GO (85 W Server, G34r1) Thermal and Power Specifications 72
2.3.29 OS mmmm YE pnc GO (140 W Server, G34r1) Thermal and Power Specifications 74
2.3.30 OS mmmm WL pnc GO (95 W Server, C32) Thermal and Power Specifications 75
2.3.31 OS mmmm WL pnc GN (95 W Server, C32) Thermal and Power Specifications 76
2.3.32 OS mmmm OF pnc GO (65 W Server, C32) Thermal and Power Specifications 77
2.3.33 OS mmmm HJ pnc GO (35 W Server, C32) Thermal and Power Specifications 79

3 Power Supply Specifications 81
3.1 bsmmmmrr L ncdd – Fr2 (1207) Power Supply Operating Conditions 81
3.2 bsmmmmrr P ncdd – Fr5 (1207) Power Supply Operating Conditions 84
3.3 bsmmmmrr J ncdd – AM2r2 Power Supply Operating Conditions 87
3.4 bsmmmmrr K ncdd – AM3 Power Supply Operating Conditions 90
3.5 bsmmmmrr S ncdd – Fr6 (1207) Power Supply Operating Conditions 93

4 Power Limit Encoding 96

5 MTOPS 97

6 APP 98

List of Figures

Figure 1. AMD Opteron™ Processor Ordering Part Number Diagram 12
Figure 2. AMD Opteron Processor Ordering Part Number Example 12
Figure 3. Socket Fr2 (1207) AC and DC Transient Limits 82
Figure 4. Socket Fr5 (1207) AC and DC Transient Limits 85
Figure 5. Socket AM2 AC and DC Transient Limits 88
Figure 6. Socket AM3 AC and DC Transient Limits 91
Figure 7. Socket Fr6 (1207) AC and DC Transient Limits 94

List of Tables

Table 1. AMD Opteron™ Processor Part Definition Options 13
Table 2. AMD Opteron Processor Cache Size Options 13
Table 3. AMD Opteron Processor Number of Cores 13
Table 4. AMD Opteron Processor Package Options 14
Table 5. AMD Opteron Processor Roadmap Options 14
Table 6. AMD Opteron Processor Model Number Options 15
Table 7. AMD Opteron Processor Segment Options 17
Table 8. AMD Opteron Processor Thermal Profiles 18
Table 9. AMD Opteron Processor Thermal and Power Table Guide 28
Table 10. bsmmmmrr L ncdd DC Operating Conditions for VDD Power Supply 81
Table 11. bsmmmmrr L ncdd AC Operating Conditions for VDD Power Supply 81
Table 12. bsmmmmrr L ncdd Maximum Power-Up and Power-Down Conditions for Power Supplies 82
Table 13. bsmmmmrr L ncdd AC and DC Operating Conditions for non-VDD Power Supplies 83
Table 14. bsmmmmrr P ncdd DC Operating Conditions for VDD Power Supply 84
Table 15. bsmmmmrr P ncdd AC Operating Conditions for VDD Power Supply 84
Table 16. bsmmmmrr P ncdd Maximum Power-Up and Power-Down Conditions for Power Supplies 85
Table 17. bsmmmmrr P ncdd AC and DC Operating Conditions for non-VDD Power Supplies 86
Table 18. bsmmmmrr J ncdd DC Operating Conditions for VDD Power Supply 87
Table 19. bsmmmmrr J ncdd AC Operating Conditions for VDD Power Supply 87
Table 20. bsmmmmrr J ncdd Maximum Power-Up and Power-Down Conditions for Power Supplies 88
Table 21. bsmmmmrr J ncdd AC and DC Operating Conditions for non-VDD Power Supplies 89
Table 22. bsmmmmrr K ncdd DC Operating Conditions for VDD Power Supply 90
Table 23. bsmmmmrr K ncdd AC Operating Conditions for VDD Power Supply 90
Table 24. bsmmmmrr K ncdd Maximum Power-Up and Power-Down Conditions for Power Supplies 91
Table 25. bsmmmmrr K ncdd AC and DC Operating Conditions for non-VDD Power Supplies 92
Table 26. bsmmmmrr S ncdd DC Operating Conditions for VDD Power Supply 93
Table 27. bsmmmmrr S ncdd AC Operating Conditions for VDD Power Supply 93
Table 28. bsmmmmrr S ncdd Maximum Power-Up and Power-Down Conditions for Power Supplies 94
Table 29. bsmmmmrr S ncdd AC and DC Operating Conditions for non-VDD Power Supplies 95
Table 30. Composite Theoretical Performance (CTP) Calculation 97
Table 31. Adjusted Peak Performance (APP) Calculation 98

Revision History

Date	Revision	Description
June 2010	3.19	Fifth public release. • Added new OPNs. • Added new definitions to Section 1.3 on page 10. • Modified Table 5 on page 14 to differentiate G34 and C32 infrastructures from F and AM infrastructures. • Added Max DDR Speed and Max HT Link Speed to Table 6 on page 15. • Changed IDD Max to TDC and corrected values in the thermal and power specification tables for all Socket G34 and Socket C32 OPNs (existing Section 2.3.27 through Section 2.3.29 and new Section 2.3.30 through Section 2.3.33).
March 2010	3.15	Fourth public release. • Added new OPNs.
September 2009	3.07	Third public release. • Added OPN. • Updated the Thermal and Power Specifications tables for 115-W and 79-W Fr6 (1207) Server Processors in Section 2.3.24 and Section 2.3.25. • Modified ILDT specs in the Power Supply Specifications section.
June 2009	3.04	Second public release.
April 2009	3.00	Initial Public release.

1 Overview

This document contains processor thermal specifications and power specifications. The specifications in this document supersede those found in the power roadmaps. For all other electrical specifications, refer to the appropriate product data sheet and the *AMD Family 10h Processor Electrical Data Sheet*, order# 40014.

1.1 Organization

This document is organized into the following sections:

- Document overview (Section 1)
- One section for each brand represented in the server/workstation segment, containing the following subsections:
  - Ordering Part Number (OPN) description (content overview in Section 1.1.1)
  - Thermal and power specification tables (content overview in Section 1.1.3 on page 9)
- Power supply specifications (content overview in Section 1.1.4 on page 9)
- Power Limit Encoding information (content overview in Section 1.1.5)
- **MTOPS** section in Table 30 on page 97
- **APP** section in Table 31 on page 98

1.1.1 Ordering Part Number Description Section Overview

The Ordering Part Number (OPN) Description section contains a depiction and description of a valid OPN for the brand contained in that chapter. Each character or group of characters within an OPN has a specific meaning (for example, model number, socket compatibility). The meaning of each OPN character is detailed in the OPN description section. Each OPN identifies a processor with a unique thermal and power specification table entry.

The OPN description section also contains a full description of the Subsection Ordering Part Number (SOPN) abstraction characters for the brand contained in that chapter. SOPNs are used to group and organize OPNs into subsections for the thermal and power tables and power supply specifications. A definition of SOPNs is contained in Section 1.3 on page 10.

1.1.2 Thermal and Power Table Guide Overview

The thermal and power table guide section contains a table mapping SOPNs and the properties associated with their defined characters to the proper thermal and power table subsections and page numbers. This table is designed to be used as a quick reference for finding the appropriate subsection for the thermal and power tables corresponding to an SOPN.

1.1.3 Thermal and Power Table Section Overview

The thermal and power specification tables contain the thermal and power requirements for each OPN. This includes the information necessary for thermal management (for example, heat sink requirements, ambient temperature assumptions) and power delivery (for example, voltage and current, and power dissipation for each P-state).

The thermal and power specification tables are organized into subsections that correspond to Subsection Ordering Part Numbers (SOPNs). SOPNs for the thermal and power tables have the brand, power limit, and part definition characters defined. They are of the form **AB** mmmmrrpnc **GH**. Each chapter provides a guide table that maps the SOPNs in the thermal and power tables within that chapter to the appropriate subsection number and page number. Within each subsection the OPNs are sorted by model number, socket compatibility, voltage, temperature, and cache size, respectively.

1.1.4 Power Supply Specification Chapter Overview

The power supply specification chapter contains the operating conditions and requirements for all voltage planes required by the processor. Power supply requirements are organized into subsections that correspond to socket infrastructure. The socket infrastructure of a particular OPN can be found in Table 5 on page 14.

1.1.5 Power Limit Encoding Chapter Overview

The power limit encoding section defines power encodings and their interpretation. Refer to the *BIOS and Kernel Developer's Guide (BKDG) for AMD Family 10h Processors*, order# 31116, for details.

1.2 Conventions

Following are conventions used with numbers.

- Binary numbers. Binary numbers are indicated by appending a "b" at the end, for example: 0110b.
- Decimal numbers. Unless specified otherwise, all numbers are decimal.
- Hexadecimal numbers. Hexadecimal numbers are indicated by appending an "h" to the end, for example: 45F8h.
- Underscores in numbers. Underscores are used to break up numbers to make them more readable, for example: 0110_1100b. They do not imply any operation.

1.3 Definitions

Following are some key definitions.

- **CPU COF**. CPU Current Operating Frequency.
- **CTP**. Composite Theoretical Performance.
- **Dual-plane**. Platforms in which the VDD and VDDNB (Northbridge) planes are isolated on the platform and controlled as separate voltages.
- **DP**. Dual Processor. Each link on DP models supports connections to I/O devices, and any one link or any sub-link can connect to another MP or DP processor.
- **Max Power**. The maximum sustained power dissipated by the processor at nominal voltage and maximum specified case or die temperature.
- **MP**. Multiprocessor. Each link on MP models supports connections to I/O devices or an MP or DP processor. Systems are limited to the number of nodes supported by all the processors. Refer to the *BIOS and Kernel Developer's Guide (BKDG) for AMD Family 10h Processors*, order# 31116, for more details.
- **MTOPS**. Millions Of Theoretical Operations Per Second.
- **NB COF**. Northbridge Current Operating Frequency.
- **OPN**. Ordering Part Number. An OPN uniquely identifies a processor and its associated specifications in the thermal and power tables and power supply specifications section.
- **P-state**. Processor Performance State. P-states are valid combinations of CPU voltage, CPU COF, Northbridge voltage, and NB COF.
- **Single-plane**. Platforms in which all the VDD and VDDNB power planes are connected together on the platform and controlled as a single power plane.
- **SOPN**. Subsection Ordering Part Number. An SOPN is an OPN with a subset of defined characters. All defined characters in an SOPN are bolded and capitalized. All abstracted characters in an SOPN are in non-bolded lowercase. Information for any OPN that matches all of the defined characters in an SOPN is contained in that subsection. For example, OPN AB1234CDE5FGH appears under the subsection for SOPN **AB** mmmmrrpnc **GH**. The abstracted (lowercase) character definitions for SOPNs are contained in the OPN description section of each chapter.
- **State**. Indicates the ACPI defined sleep state, power state, and performance state for the related specifications. 'x' indicates the related specifications are independent of the associated ACPI state. For example, S0.C0.P0 indicates sleep state 0, power state 0, and performance state 0. S3.Cx.Px indicates sleep state 3 entered from any power and performance state combination.
- **TDC**. Thermal Design Current. The maximum sustained current that the voltage regulator must support. TDC is defined at nominal voltage and maximum specified case or die temperature.
- **TDP**. Thermal Design Power. The thermal design power is the maximum power a processor can draw for a thermally significant period while running commercially useful software. The constraining conditions for TDP are specified in the notes in the thermal and power tables.
- **UP**. Uniprocessor. Each link on UP models supports connections to I/O devices.

- **VID_VDD**. The VID_VDD voltage is the VID-requested VDD supply level. Refer to the *BIOS and Kernel Developer's Guide (BKDG) for AMD Family 10h Processors*, order# 31116, for VID to voltage translation specifications.
- **VID_VDDNB**. The VID_VDDNB voltage is the VID-requested VDD Northbridge supply level. Refer to the *BIOS and Kernel Developer's Guide (BKDG) for AMD Family 10h Processors*, order# 31116, for VID to voltage translation specifications.

2 AMD Opteron™ Processor

The following sections contain the OPN description and thermal and power specifications for the AMD Opteron™ processor. Each column in the thermal and power tables represents a specific Ordering Part Number (OPN). Section 2.1 provides an example of the OPN structure for this processor family.

2.1 AMD Opteron™ Processor Ordering Part Number Description

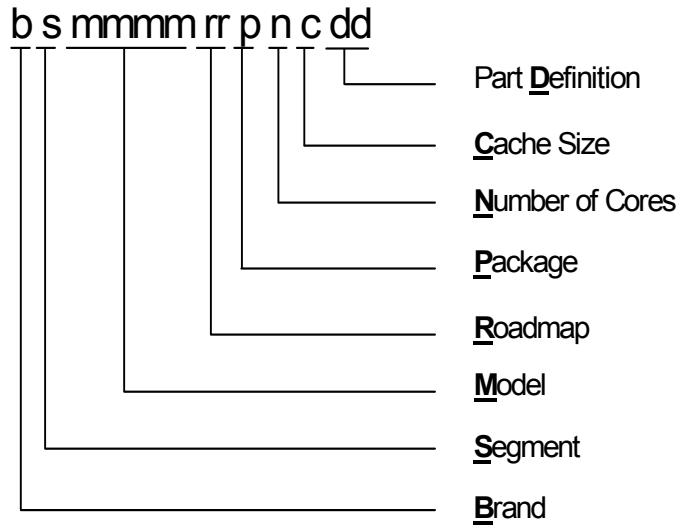

Figure 1. AMD Opteron™ Processor Ordering Part Number Diagram

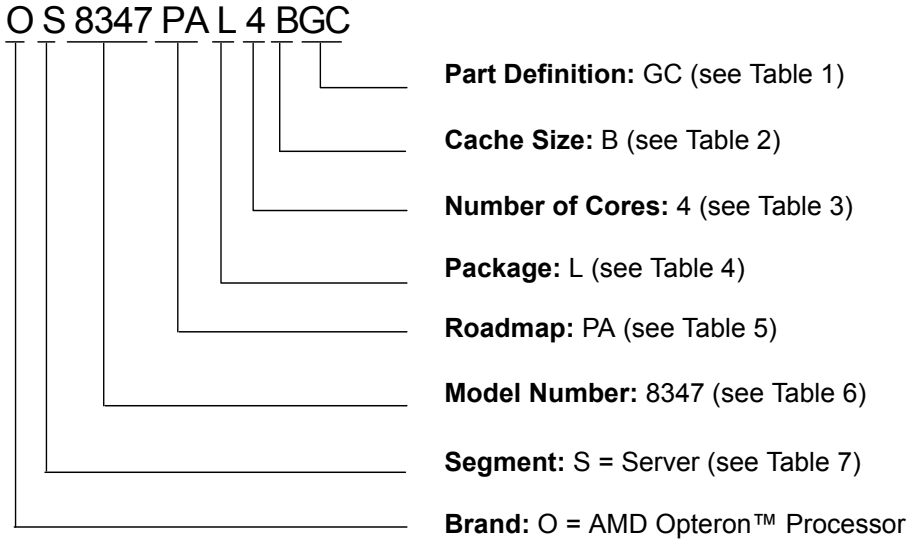

Figure 2. AMD Opteron™ Processor Ordering Part Number Example

Table 1. AMD Opteron™ Processor Part Definition Options

Part Definition	Revision	CPUID 8000_0001h EAX [31:0] (CPUID)
GC	Rev B1	00100F21h
GE	Rev BA	00100F2Ah
GD	Rev B2	00100F22h
GH	Rev B3	00100F23h
GI	Rev C2	00100F42h
GN	Rev D0	00100F80h
GO	Rev D1	00100F81h

Table 2. AMD Opteron™ Processor Cache Size Options

OPN Character	L2 Cache Size	L3 Cache Size
B	512 KB	2048 KB
D	512 KB	6144 KB
E	512 KB	12288 KB

Table 3. AMD Opteron™ Processor Number of Cores

OPN Character	Number of Cores
4	4
6	6
8	8
C	12

Table 4. AMD Opteron™ Processor Package Options

OPN Character	Package
L	Fr2 (1207)
J	AM2r2
K	AM3
P	Fr5 (1207)
S	Fr6 (1207)
T	G34r1
U	C32

Table 5. AMD Opteron™ Processor Roadmap Options

OPN Character	Max TDP	Socket Infrastructure	IDD Max (VDD)	IDD Max (NB)	IDD TDC (VDD)	IDD TDC (NB)	HS Class
FM	79 W	Fr2 (1207)	60 A	20 A	-	-	HS57
PA	79 W	Fr2 (1207)	60 A	20 A	-	-	HS54
WA	115 W	Fr2 (1207)	80 A	20 A	-	-	HS65
WB	115 W	AM2r2	80 A	20 A	-	-	HS65
WE	95 W	AM2r2	80 A	20 A	-	-	HS65
YA	137 W	Fr2 (1207)	95 A	20 A	-	-	HS72
WH	115 W	Fr5 (1207)	80 A	20 A	-	-	HS65
WG	115 W	AM3	95 A	20 A	-	-	HS65
PC	79 W	Fr5 (1207)	60 A	20 A	-	-	HS54
YC	137 W	Fr5 (1207)	95 A	20 A	-	-	HS72
NA	60 W	Fr5 (1207)	50 A	20 A	-	-	HS54
WJ	115 W	Fr6 (1207)	80 A	20 A	-	-	HS65
PD	79 W	Fr6 (1207)	60 A	20 A	-	-	HS54
NB	60 W	Fr6 (1207)	50 A	20 A	-	-	HS54
WK	115 W	G34r1	-	-	110 A	25 A	HS70, HS65
VA	85 W	G34r1	-	-	80 A	25 A	HS65,HS63
YE	140 W	G34r1	-	-	115 A	25 A	HS75,HS72
WL	95 W	C32	-	-	95 A	20 A	HS73,HS65
OF	65 W	C32	-	-	70 A	20 A	HS75,HS72
HJ	35 W	C32	-	-	44 A	12 A	HS63,HS55

Table 6. AMD Opteron™ Processor Model Number Options

Core Frequency	Single-Plane NB Frequency	Dual-Plane NB Frequency	Uni-Processor	Dual-Processor	Multi-Processor	Max DDR Speed	Max HT Link Speed
1700 MHz	1200 MHz	1400 MHz	–	2344	–	800 MT/s	1000 MT/s
1700 MHz	1400 MHz	1600 MHz	–	2344	–	800 MT/s	1000 MT/s
1700 MHz	1400 MHz	1600 MHz	–	23GF	–	800 MT/s	2000 MT/s
1700 MHz	N/A	1800 MHz	–	–	6164	1333 MT/s	6400 MT/s
1700 MHz	N/A	1800 MHz	–	4162	–	1333 MT/s	6400 MT/s
1800 MHz	1400 MHz	1600 MHz	13HF	23HF	83HF	800 MT/s	2000 MT/s
1800 MHz	1400 MHz	1600 MHz	–	2346	8346	800 MT/s	1000 MT/s
1800 MHz	N/A	2000 MHz	–	2419	-	800 MT/s	4800 MT/s
1800 MHz	N/A	1800 MHz	–	–	6124	1333 MT/s	6400 MT/s
1800 MHz	N/A	1800 MHz	–	4164	–	1333 MT/s	6400 MT/s
1900 MHz	1400 MHz	1600 MHz	–	2347	8347	800 MT/s	1000 MT/s
1900 MHz	N/A	1800 MHz	–	–	6168	1333 MT/s	6400 MT/s
2000 MHz	1400 MHz	1800 MHz	–	2350	8350	800 MT/s	1000 MT/s
2000 MHz	1600 MHz	1800 MHz	–	2350	8350	800 MT/s	1000 MT/s
2000 MHz	N/A	2200 MHz	–	2423	–	800 MT/s	4800 MT/s
2000 MHz	N/A	1800 MHz	–	–		1333 MT/s	6400 MT/s
2000 MHz	N/A	1800 MHz	–	–	6128	1333 MT/s	6400 MT/s
2000 MHz	N/A	1800 MHz	–	–		1333 MT/s	6400 MT/s
2100 MHz	1600 MHz	1800 MHz	–	2352	–	800 MT/s	2000 MT/s
2100 MHz	1600 MHz	1800 MHz	1352	–	–	800 MT/s	3600 MT/s
2100 MHz	1600 MHz	2000 MHz	–	2372		800 MT/s	2000 MT/s
2100 MHz	1600 MHz	2000 MHz	–	2373	8373	800 MT/s	4000 MT/s
2100 MHz	N/A	2200 MHz	–	2425	8425	800 MT/s	4800 MT/s
2100 MHz	N/A	1800 MHz	–	–	6172	1333 MT/s	6400 MT/s
2100 MHz	N/A	2200 MHz	–	4170	–	1333 MT/s	6400 MT/s
2200 MHz	1600 MHz	1800 MHz	–	2354	8354	800 MT/s	2000 MT/s
2200 MHz	1600 MHz	1800 MHz	1354	–	–	800 MT/s	3600 MT/s
2200 MHz	1600 MHz	2000 MHz	–	2374	8374	800 MT/s	2000 MT/s
2200 MHz	N/A	2200 MHz	–	2427	–	800 MT/s	4800 MT/s
2200 MHz	N/A	1800 MHz	–	–	6174	1333 MT/s	6400 MT/s

Table 6. AMD Opteron™ Processor Model Number Options (Continued)

Core Frequency	Single-Plane NB Frequency	Dual-Plane NB Frequency	Uni-Processor	Dual-Processor	Multi-Processor	Max DDR Speed	Max HT Link Speed
2200 MHz	N/A	2200 MHz	–	4122	–	1333 MT/s	6400 MT/s
2300 MHz	1600 MHz	2000 MHz	–	2376	8376	800 MT/s	2000 MT/s
2300 MHz	1600 MHz	2000 MHz	–	2377	–	800 MT/s	4000 MT/s
2300 MHz	1600 MHz	2000 MHz	–	2356	8356	800 MT/s	2000 MT/s
2300 MHz	1600 MHz	2000 MHz	1356	–	–	800 MT/s	4000 MT/s
2300 MHz	N/A	1800 MHz	–	–	6134	1333 MT/s	6400 MT/s
2300 MHz	N/A	1800 MHz	–	–	6176	1333 MT/s	6400 MT/s
2300 MHz	N/A	1800 MHz	–	–		1333 MT/s	6400 MT/s
2300 MHz	N/A	2200 MHz	–	4174	–	1333 MT/s	6400 MT/s
2400 MHz	1600 MHz	2000 MHz	–	2358	8358	800 MT/s	1000 MT/s
2400 MHz	1600 MHz	2000 MHz	–	2378	8378	800 MT/s	2000 MT/s
2400 MHz	1600 MHz	2000 MHz	–	2379	8379	800 MT/s	4000 MT/s
2400 MHz	N/A	2200 MHz	–	2431	8431	800 MT/s	4800 MT/s
2400 MHz	N/A	1800 MHz	–	–	6136	1333 MT/s	6400 MT/s
2400 MHz	N/A	2200 MHz	–	4176	–	1333 MT/s	6400 MT/s
2500 MHz	1600 MHz	2000 MHz	–	2360	8360	800 MT/s	1000 MT/s
2500 MHz	1600 MHz	2000 MHz	–	2380	8380	800 MT/s	2000 MT/s
2500 MHz	1600 MHz	2000 MHz	–	2381	8381	800 MT/s	4000 Mt/s
2500 MHz	1600 MHz	2200 MHz	1381	–	–	1333 MT/s	4400 MT/s
2600 MHz	1600 MHz	2200 MHz	–	2382	8382	800 MT/s	2000 MT/s
2600 MHz	N/A	2200 MHz	–	2435	8435	800 MT/s	4800 MT/s
2600 MHz	N/A	2200 MHz	–	4130	–	1333 MT/s	6400 MT/s
2600 MHz	N/A	2200 MHz	–	4180	–	1333 MT/s	6400 MT/s
2700 MHz	1600 MHz	2200 MHz	–	2384	8384	800 MT/s	2000 MT/s
2700 MHz	1600 MHz	2200 MHz	1385	–	–	1333 MT/s	4400 MT/s
2800 MHz	1600 MHz	2200 MHz	–	2386	8386	800 MT/s	2000 MT/s
2800 MHz	1600 MHz	2200 MHz	–	2387	8387	800 MT/s	4400 MT/s
2800 MHz	1600 MHz	2200 MHz	–			800 MT/s	4400 MT/s
2800 MHz	N/A	2200 MHz	–	4184	–	1333 MT/s	6400 MT/s
2900 MHz	1600 MHz	2200 MHz	–	2389	8389	800 MT/s	4400 MT/s
2900 MHz	1600 MHz	2200 MHz	1389	–	–	1333 MT/s	4400 MT/s
3100 MHz	1600 MHz	2200 MHz	–	2393	8393	800 MT/s	4400 MT/s

Table 7. AMD Opteron™ Processor Segment Options

OPN Character	Segment
E	Embedded Server
S	Server

Table 8. AMD Opteron™ Processor Thermal Profiles

Thermal Profile	A
Heat Sink Thermal Resistance	0.29°C/W
Heat Sink Local Ambient	42°C
Profile Thermal Resistance	0.232°C/W
Profile Ambient	48°C
Heatsink Class	HS65
TDP	**Tcase Max**
0.0 W	55.0°C
5.0 W	55.0°C
10.0 W	55.0°C
15.0 W	55.0°C
20.0 W	55.0°C
25.0 W	55.0°C
30.0 W	55.0°C
35.0 W	56.1°C
40.0 W	57.3°C
45.0 W	58.4°C
50.0 W	59.6°C
55.0 W	60.8°C
60.0 W	61.9°C
65.0 W	63.1°C
70.0 W	64.2°C
75.0 W	65.4°C
80.0 W	66.6°C
85.0 W	67.7°C
90.0 W	68.9°C
95.0 W	70.0°C

Thermal Profile	B
Heat Sink Thermal Resistance	0.42°C/W
Heat Sink Local Ambient	42°C
Profile Thermal Resistance	0.338°C/W
Profile Ambient	48°C
Heatsink Class	HS54
TDP	**Tcase Max**
0.0 W	55.0°C
5.0 W	55.0°C
10.0 W	55.0°C
15.0 W	55.0°C
20.0 W	55.0°C
25.0 W	56.5°C
30.0 W	58.1°C
35.0 W	59.8°C
40.0 W	61.5°C
45.0 W	63.2°C
50.0 W	64.9°C
55.0 W	66.6°C
60.0 W	68.3°C
65.0 W	70.0°C
68.0 W	71.0°C

Note: *The thermal profile is used to define the relationship between Tcase max and device specific Thermal Design Power for processors specified in this document. The heat sink thermal resistance and heat sink local ambient values specify heat sink design targets. The profile thermal resistance and profile ambient values specify the relationship between part specific power and part specific Tcase Max.*

Table 8: AMD Opteron™ Processor Thermal Profiles (Continued)

Thermal Profile	C
Heat Sink Thermal Resistance	0.24°C/W
Heat Sink Local Ambient	38°C
Profile Thermal Resistance	0.197°C/W
Profile Ambient	44°C
Heatsink Class	HS72
TDP	**Tcase Max**
0.0 W	55.0°C
5.0 W	55.0°C
10.0 W	55.0°C
15.0 W	55.0°C
20.0 W	55.0°C
25.0 W	55.0°C
30.0 W	55.0°C
35.0 W	55.0°C
40.0 W	55.0°C
45.0 W	55.0°C
50.0 W	55.0°C
55.0 W	55.0°C
60.0 W	55.8°C
65.0 W	56.8°C
70.0 W	57.8°C
75.0 W	58.8°C
80.0 W	59.8°C
85.0 W	60.7°C
90.0 W	61.7°C
95.0 W	62.7°C
100.0 W	63.7°C
105.0 W	64.7°C
110.0 W	65.7°C
115.0 W	66.7°C
120.0 W	67.6°C
125.0 W	68.6°C
130.0 W	69.6°C
135.0 W	70.6°C
137.0 W	71.0°C

Thermal Profile	D
Heat Sink Thermal Resistance	0.29°C/W
Heat Sink Local Ambient	42°C
Profile Thermal Resistance	0.243°C/W
Profile Ambient	48°C
Heatsink Class	HS65
TDP	**Tcase Max**
0.0 W	55.0°C
5.0 W	55.0°C
10.0 W	55.0°C
15.0 W	55.0°C
20.0 W	55.0°C
25.0 W	55.0°C
30.0 W	55.3°C
35.0 W	56.5°C
40.0 W	57.7°C
45.0 W	58.9°C
50.0 W	60.2°C
55.0 W	61.4°C
60.0 W	62.6°C
65.0 W	63.8°C
70.0 W	65.0°C
75.0 W	66.2°C
80.0 W	67.4°C
85.0 W	68.7°C
90.0 W	69.9°C
95.0 W	71.1°C
100.0 W	72.3°C
105.0 W	73.5°C
110.0 W	74.7°C
115.0 W	76.0°C

Note: *The thermal profile is used to define the relationship between Tcase max and device specific Thermal Design Power for processors specified in this document. The heat sink thermal resistance and heat sink local ambient values specify heat sink design targets. The profile thermal resistance and profile ambient values specify the relationship between part specific power and part specific Tcase Max.*

Table 8: AMD Opteron™ Processor Thermal Profiles (Continued)

Thermal Profile	E
Heat Sink Thermal Resistance	0.42°C/W
Heat Sink Local Ambient	42°C
Profile Thermal Resistance	0.354°C/W
Profile Ambient	48°C
Heatsink Class	HS54
TDP	**Tcase Max**
0.0 W	55.0°C
5.0 W	55.0°C
10.0 W	55.0°C
15.0 W	55.0°C
20.0 W	55.1°C
25.0 W	56.9°C
30.0 W	58.6°C
35.0 W	60.4°C
40.0 W	62.2°C
45.0 W	63.9°C
50.0 W	65.7°C
55.0 W	67.5°C
60.0 W	69.2°C
65.0 W	71.0°C
70.0 W	72.8°C
75.0 W	74.6°C
79.0 W	76.0°C

Thermal Profile	F
Heat Sink Thermal Resistance	0.39°C/W
Heat Sink Local Ambient	55°C
Profile Thermal Resistance	0.316°C/W
Profile Ambient	61°C
Heatsink Class	HS57
TDP	**Tcase Max**
0.0 W	61.0°C
5.0 W	62.6°C
10.0 W	64.2°C
15.0 W	65.7°C
20.0 W	67.3°C
25.0 W	68.9°C
30.0 W	70.5°C
35.0 W	72.1°C
40.0 W	73.6°C
45.0 W	75.2°C
50.0 W	76.8°C
55.0 W	78.4°C
60.0 W	80.0°C
65.0 W	81.5°C
70.0 W	83.1°C
75.0 W	84.7°C
79.0 W	86.0°C

Note: *The thermal profile is used to define the relationship between Tcase max and device specific Thermal Design Power for processors specified in this document. The heat sink thermal resistance and heat sink local ambient values specify heat sink design targets. The profile thermal resistance and profile ambient values specify the relationship between part specific power and part specific Tcase Max.*

Table 8: AMD Opteron™ Processor Thermal Profiles (Continued)

Thermal Profile	G
Heat Sink Thermal Resistance	0.30°C/W
Heat Sink Local Ambient	42°C
Profile Thermal Resistance	0.252°C/W
Profile Ambient	48°C
Heatsink Class	HS65
TDP	**Tcase Max**
0.0 W	55.0°C
5.0 W	55.0°C
10.0 W	55.0°C
15.0 W	55.0°C
20.0 W	55.0°C
25.0 W	55.0°C
30.0 W	55.6°C
35.0 W	56.8°C
40.0 W	58.1°C
45.0 W	59.3°C
50.0 W	60.6°C
55.0 W	61.9°C
60.0 W	63.1°C
65.0 W	64.4°C
70.0 W	65.6°C
75.0 W	66.9°C
80.0 W	68.2°C
85.0 W	69.4°C
90.0 W	70.7°C
95.0 W	71.9°C
100.0 W	73.2°C
105.0 W	74.5°C
110.0 W	75.7°C
115.0 W	77.0°C

Thermal Profile	H
Heat Sink Thermal Resistance	0.43°C/W
Heat Sink Local Ambient	42°C
Profile Thermal Resistance	0.354°C/W
Profile Ambient	48°C
Heatsink Class	HS54
TDP	**Tcase Max**
0.0 W	55.0°C
5.0 W	55.0°C
10.0 W	55.0°C
15.0 W	55.0°C
20.0 W	55.1°C
25.0 W	56.9°C
30.0 W	58.6°C
35.0 W	60.4°C
40.0 W	62.2°C
45.0 W	63.9°C
50.0 W	65.7°C
55.0 W	67.5°C
60.0 W	69.2°C
65.0 W	71.0°C
70.0 W	72.8°C
75.0 W	74.6°C
79.0 W	76.0°C

Note: *The thermal profile is used to define the relationship between Tcase max and device specific Thermal Design Power for processors specified in this document. The heat sink thermal resistance and heat sink local ambient values specify heat sink design targets. The profile thermal resistance and profile ambient values specify the relationship between part specific power and part specific Tcase Max.*

Table 8: AMD Opteron™ Processor Thermal Profiles (Continued)

Thermal Profile	I
Heat Sink Thermal Resistance	0.25°C/W
Heat Sink Local Ambient	38°C
Profile Thermal Resistance	0.212°C/W
Profile Ambient	44°C
Heatsink Class	HS72
TDP	**Tcase Max**
0.0 W	55.0°C
5.0 W	55.0°C
10.0 W	55.0°C
15.0 W	55.0°C
20.0 W	55.0°C
25.0 W	55.0°C
30.0 W	55.0°C
35.0 W	55.0°C
40.0 W	55.0°C
45.0 W	55.0°C
50.0 W	55.0°C
55.0 W	55.7°C
60.0 W	56.7°C
65.0 W	57.8°C
70.0 W	58.8°C
75.0 W	59.9°C
80.0 W	61.0°C
85.0 W	62.0°C
90.0 W	63.1°C
95.0 W	64.1°C
100.0 W	65.2°C
105.0 W	66.3°C
110.0 W	67.3°C
115.0 W	68.4°C
120.0 W	69.4°C
125.0 W	70.5°C
130.0 W	71.6°C
135.0 W	72.6°C
137.0 W	73.0°C

Thermal Profile	J
Heat Sink Thermal Resistance	0.43°C/W
Heat Sink Local Ambient	42°C
Profile Thermal Resistance	0.333°C/W
Profile Ambient	48°C
Heatsink Class	HS54
TDP	**Tcase Max**
0.0 W	55.0°C
5.0 W	55.0°C
10.0 W	55.0°C
15.0 W	55.0°C
20.0 W	55.0°C
25.0 W	56.3°C
30.0 W	58.0°C
35.0 W	59.7°C
40.0 W	61.3°C
45.0 W	63.0°C
50.0 W	64.7°C
55.0 W	66.3°C
60.0 W	68.0°C

Note: *The thermal profile is used to define the relationship between Tcase max and device specific Thermal Design Power for processors specified in this document. The heat sink thermal resistance and heat sink local ambient values specify heat sink design targets. The profile thermal resistance and profile ambient values specify the relationship between part specific power and part specific Tcase Max.*

Table 8: AMD Opteron™ Processor Thermal Profiles (Continued)

Thermal Profile	K
Heat Sink Thermal Resistance	0.29°C/W
Heat Sink Local Ambient	42°C
Profile Thermal Resistance	0.243°C/W
Profile Ambient	48°C
Heatsink Class	HS65
TDP	**Tcase Max**
0.0 W	55.0°C
5.0 W	55.0°C
10.0 W	55.0°C
15.0 W	55.0°C
20.0 W	55.0°C
25.0 W	55.0°C
30.0 W	55.3°C
35.0 W	56.5°C
40.0 W	57.7°C
45.0 W	59.0°C
50.0 W	60.2°C
55.0 W	61.4°C
60.0 W	62.6°C
65.0 W	63.8°C
70.0 W	65.0°C
75.0 W	66.3°C
80.0 W	67.5°C
85.0 W	68.7°C
90.0 W	69.9°C
95.0 W	71.1°C
100.0 W	72.3°C
105.0 W	73.6°C
110.0 W	74.8°C
115.0 W	76.0°C

Thermal Profile	P
Heat Sink Thermal Resistance	0.43°C/W
Heat Sink Local Ambient	42°C
Profile Thermal Resistance	0.333°C/W
Profile Ambient	48°C
Heatsink Class	HS54
TDP	**Tcase Max**
0.0 W	55.0°C
5.0 W	55.0°C
10.0 W	55.0°C
15.0 W	55.0°C
20.0 W	55.0°C
25.0 W	56.3°C
30.0 W	58.0°C
35.0 W	59.7°C
40.0 W	61.3°C
45.0 W	63.0°C
50.0 W	64.7°C
55.0 W	66.3°C
60.0 W	68.0°C

Note: *The thermal profile is used to define the relationship between Tcase max and device specific Thermal Design Power for processors specified in this document. The heat sink thermal resistance and heat sink local ambient values specify heat sink design targets. The profile thermal resistance and profile ambient values specify the relationship between part specific power and part specific Tcase Max.*

Table 8: AMD Opteron™ Processor Thermal Profiles (Continued)

Thermal Profile	Q	
	Profile 1	**Profile 2**
Heat Sink Thermal Resistance	0.20°C/W	0.23°C/W
Heat Sink Local Ambient	42.0°C	42.0°C
Profile Thermal Resistance	0.156°C/W	
Profile Ambient	48.0°C	
Heatsink Class	HS70	HS65
Max Power	**Tcase Max**	
0 W	55.0°C	
10 W	55.0°C	
20 W	55.0°C	
30 W	55.0°C	
40 W	55.0°C	
50 W	55.8°C	
60 W	57.4°C	
70 W	58.9°C	
80 W	60.5°C	
90 W	62.0°C	
100 W	63.6°C	
110 W	65.2°C	
120 W	66.7°C	
130 W	68.3°C	
135 W	69.0°C	

Thermal Profile	R	
	Profile 1	**Profile 2**
Heat Sink Thermal Resistance	0.20°C/W	0.24°C/W
Heat Sink Local Ambient	42.0°C	42.0°C
Profile Thermal Resistance	0.163°C/W	
Profile Ambient	48.0°C	
Heatsink Class	HS70	HS65
Max Power	**Tcase Max**	
0 W	55.0°C	
10 W	55.0°C	
20 W	55.0°C	
30 W	55.0°C	
40 W	55.0°C	
50 W	56.2°C	
60 W	57.8°C	
70 W	59.4°C	
80 W	61.0°C	
90 W	62.7°C	
100 W	64.3°C	
110 W	65.9°C	
120 W	67.6°C	
130 W	69.2°C	
135 W	70.0°C	

Note: The thermal profile is used to define the relationship between Tcase max and device specific Thermal Design Power for processors specified in this document. The heat sink thermal resistance and heat sink local ambient values specify heat sink design targets. The profile thermal resistance and profile ambient values specify the relationship between part specific power and part specific Tcase Max.

Table 8: AMD Opteron™ Processor Thermal Profiles (Continued)

Thermal Profile	S	
	Profile 1	**Profile 2**
Heat Sink Thermal Resistance	0.23°C/W	0.27°C/W
Heat Sink Local Ambient	42.0°C	42.0°C
Profile Thermal Resistance	0.170°C/W	
Profile Ambient	48.0°C	
Heatsink Class	HS65	HS63
Max Power	**Tcase Max**	
0 W	55.0°C	
5 W	55.0°C	
10 W	55.0°C	
15 W	55.0°C	
20 W	55.0°C	
25 W	55.0°C	
30 W	55.0°C	
35 W	55.0°C	
40 W	55.0°C	
45 W	55.7°C	
50 W	56.5°C	
55 W	57.4°C	
60 W	58.2°C	
65 W	59.1°C	
70 W	59.9°C	
75 W	60.8°C	
80 W	61.6°C	
85 W	62.5°C	
90 W	63.3°C	
95 W	64.2°C	
100 W	65.0°C	

Thermal Profile	T	
	Profile 1	**Profile 2**
Heat Sink Thermal Resistance	0.24°C/W	0.28°C/W
Heat Sink Local Ambient	42.0°C	42.0°C
Profile Thermal Resistance	0.180°C/W	
Profile Ambient	48.0°C	
Heatsink Class	HS65	HS63
Max Power	**Tcase Max**	
0 W	55.0°C	
5 W	55.0°C	
10 W	55.0°C	
15 W	55.0°C	
20 W	55.0°C	
25 W	55.0°C	
30 W	55.0°C	
35 W	55.0°C	
40 W	55.2°C	
45 W	56.1°C	
50 W	57.0°C	
55 W	57.9°C	
60 W	58.8°C	
65 W	59.7°C	
70 W	60.6°C	
75 W	61.5°C	
80 W	62.4°C	
85 W	63.3°C	
90 W	64.2°C	
95 W	65.1°C	
100 W	66.0°C	

Note: The thermal profile is used to define the relationship between Tcase max and device specific Thermal Design Power for processors specified in this document. The heat sink thermal resistance and heat sink local ambient values specify heat sink design targets. The profile thermal resistance and profile ambient values specify the relationship between part specific power and part specific Tcase Max.

Table 8: AMD Opteron™ Processor Thermal Profiles (Continued)

Thermal Profile	V	
	Profile 1	Profile 2
Heat Sink Thermal Resistance	0.15°C/W	0.18°C/W
Heat Sink Local Ambient	38.0°C	38.0°C
Profile Thermal Resistance	0.121°C/W	
Profile Ambient	44.0°C	
Heatsink Class	HS75	HS72
Max Power	Tcase Max	
0 W	55.0°C	
10 W	55.0°C	
20 W	55.0°C	
30 W	55.0°C	
40 W	55.0°C	
50 W	55.0°C	
60 W	55.0°C	
70 W	55.0°C	
80 W	55.0°C	
90 W	55.0°C	
100 W	56.1°C	
110 W	57.3°C	
120 W	58.5°C	
130 W	59.7°C	
135 W	60.3°C	
140 W	60.9°C	
145 W	61.5°C	
150 W	62.2°C	
155 W	62.8°C	
160 W	63.4°C	
165 W	64.0°C	

Thermal Profile	W	
	Profile 1	Profile 2
Heat Sink Thermal Resistance	0.34°C/W	0.42°C/W
Heat Sink Local Ambient	42.0°C	42.0°C
Profile Thermal Resistance	0.275°C/W	
Profile Ambient	48.0°C	
Heatsink Class	HS63	HS55
Max Power	Tcase Max	
0 W	55.0°C	
10 W	55.0°C	
20 W	55.0°C	
30 W	56.3°C	
40 W	59.0°C	
50 W	61.8°C	
60 W	64.5°C	
70 W	67.3°C	
80 W	70.0°C	

Note: The thermal profile is used to define the relationship between Tcase max and device specific Thermal Design Power for processors specified in this document. The heat sink thermal resistance and heat sink local ambient values specify heat sink design targets. The profile thermal resistance and profile ambient values specify the relationship between part specific power and part specific Tcase Max.

Table 8: AMD Opteron™ Processor Thermal Profiles (Continued)

Thermal Profile	Y	
	Profile 1	Profile 2
Heat Sink Thermal Resistance	0.24°C/W	0.29°C/W
Heat Sink Local Ambient	42.0°C	42.0°C
Profile Thermal Resistance	0.232°C/W	
Profile Ambient	48.0°C	
Heatsink Class	HS73	HS65
Max Power	**Tcase Max**	
0 W	55.0°C	
10 W	55.0°C	
20 W	55.0°C	
30 W	55.0°C	
40 W	57.3°C	
50 W	59.6°C	
60 W	61.9°C	
70 W	64.2°C	
80 W	66.6°C	
90 W	68.9°C	
95 W	70.0°C	
100 W	71.2°C	
110 W	73.5°C	
115 W	75.0°C	

Thermal Profile	Z	
	Profile 1	Profile 2
Heat Sink Thermal Resistance	0.34°C/W	0.42°C/W
Heat Sink Local Ambient	50.0°C	50.0°C
Profile Thermal Resistance	0.257°C/W	
Profile Ambient	56.0°C	
Heatsink Class	HS63	HS55
Max Power	**Tcase Max**	
0 W	56.0°C	
10 W	58.6°C	
20 W	61.1°C	
30 W	63.7°C	
35 W	65.0°C	
40 W	66.3°C	
43 W	68.0°C	

Note: The thermal profile is used to define the relationship between Tcase max and device specific Thermal Design Power for processors specified in this document. The heat sink thermal resistance and heat sink local ambient values specify heat sink design targets. The profile thermal resistance and profile ambient values specify the relationship between part specific power and part specific Tcase Max.

2.2 AMD Opteron™ Processor Thermal and Power Table Guide

The thermal and power table guide shown in Table 9 maps SOPNs and the properties associated with their defined characters to the proper thermal and power table subsections and page numbers. This table is designed to be used as a quick reference for finding the appropriate subsection for the thermal and power tables corresponding to an SOPN.

Table 9. AMD Opteron™ Processor Thermal and Power Table Guide

SOPN	Power	Revision	Thermal/Power Tables
OS mmmm **PA** pnc **GC**	79 W	Rev B1	Section 2.3.1 on page 31
OS mmmm **PA** pnc **GD**	79 W	Rev B2	Section 2.3.2 on page 33
OS mmmm **PA** pnc **GE**	79 W	Rev BA	Section 2.3.3 on page 34
OS mmmm **WA** pnc **GC**	115 W	Rev B1	Section 2.3.4 on page 36
OE mmmm **FM** pnc **GD**	79 W	Rev B2	Section 2.3.5 on page 37
OS mmmm **WE** pnc **GD**	95 W	Rev B2	Section 2.3.6 on page 38
OS mmmm **WA** pnc **GE**	95 W	Rev BA	Section 2.3.7 on page 39
OS mmmm **WA** pnc **GD**	115 W	Rev B2	Section 2.3.8 on page 40
OS mmmm **WB** pnc **GD**	115 W	Rev B2	Section 2.3.9 on page 42
OS mmmm **YA** pnc **GD**	137 W	Rev B2	Section 2.3.10 on page 43
OS mmmm **WA** pnc **GH**	115 W	Rev B3	Section 2.3.11 on page 44
OS mmmm **PA** pnc **GH**	79 W	Rev B3	Section 2.3.12 on page 46
OS mmmm **YA** pnc **GH**	137 W	Rev B3	Section 2.3.13 on page 48
OS mmmm **WB** pnc **GH**	115 W	Rev B3	Section 2.3.14 on page 49
OE mmmm **FM** pnc **GH**	79 W	Rev B3	Section 2.3.15 on page 51
OS mmmm **WA** pnc **GI**	115 W	Rev C2	Section 2.3.16 on page 52
OS mmmm **PA** pnc **GI**	79 W	Rev C2	Section 2.3.17 on page 55
OS mmmm **YA** pnc **GI**	137 W	Rev C2	Section 2.3.18 on page 57
OS mmmm **WH** pnc **GI**	115 W	Rev C2	Section 2.3.19 on page 58
OS mmmm **PC** pnc **GI**	79 W	Rev C2	Section 2.3.20 on page 59
OS mmmm **YC** pnc **GI**	137 W	Rev C2	Section 2.3.21 on page 60
OS mmmm **WG** pnc **GI**	115 W	Rev C2	Section 2.3.22 on page 61
OS mmmm **NA** pnc **GI**	60 W	Rev C2	Section 2.3.23 on page 63
OS mmmm **WJ** pnc **GN**	115 W	Rev D0	Section 2.3.24 on page 64
OS mmmm **PD** pnc **GN**	79 W	Rev D0	Section 2.3.25 on page 66
OS mmmm **NB** pnc **GN**	60 W	Rev D0	Section 2.3.26 on page 67
OS mmmm **WK** pnc **GO**	115 W	Rev D1	Section 2.3.27 on page 68

Table 9. AMD Opteron™ Processor Thermal and Power Table Guide (Continued)

SOPN	Power	Revision	Thermal/Power Tables
OS mmmm **VA** pnc **GO**	85 W	Rev D1	Section 2.3.28 on page 72
OS mmmm **YE** pnc **GO**	140 W	Rev D1	Section 2.3.29 on page 74
OS mmmm **WL** pnc **GO**	95 W	Rev D1	Section 2.3.30 on page 75
OS mmmm **WL** pnc **GN**	95 W	Rev D0	Section 2.3.31 on page 76
OS mmmm **OF** pnc **GO**	65 W	Rev D1	Section 2.3.32 on page 77
OS mmmm **HJ** pnc **GO**	35 W	Rev D1	Section 2.3.33 on page 79

2.3 AMD Opteron™ Processor Thermal and Power Specifications

The thermal and power specification tables contain the thermal and power requirements for each OPN. This includes the information necessary for thermal management (for example, heat sink requirements, temperature assumptions) and power delivery (for example, voltage, current, and power dissipation for each P-state). Refer to the *AMD Family 10h Processor Electrical Data Sheet*, order# 40014, for all other electrical specifications for the processor. Refer to the *BIOS and Kernel Developer's Guide (BKDG) for AMD Family 10h Processors*, order# 31116, for power management BIOS requirements.

Section 2.1 on page 12 provides an example of the OPN structure for processors documented in this chapter and Table 9 on page 28 provides a guide to OPN organization in the following subsections. Refer to Section 1.2 on page 9 and Section 1.3 on page 10 for numbering conventions and terminology definitions used in these tables.

2.3.1 OS mmmm PA pnc GC (79 W Server, Fr2 (1207)) Thermal and Power Specifications

OPN			OS2344PAL4BGC		OS2346PAL4BGC OS8346PAL4BGC	
State	Specification[8]	Notes	Single Plane	Dual Plane	Single Plane	Dual Plane
S0.C0.Px	Tcase Max	1	55 °C to 71 °C		55 °C to 71 °C	
	Tctl Max	2	70 °C		70 °C	
	Tambient Min		5 °C		5 °C	
	Thermal Profile		B		B	
	Startup P-state	5	S0.C0.P4		S0.C0.P4	
	HTC P-state	4	S0.C0.P4		S0.C0.P4	
S0.Cx.Px	NB COF	6,15	1200 MHz	1400 MHz	1400 MHz	1600 MHz
	VID_VDDNB	11	N/A	1.150 V	N/A	1.150 V
	IDDNB Max	12	N/A	9.4 A	N/A	9.4 A
S0.C0.P0	CPU COF	6	1700 MHz		1800 MHz	
	TDP	3,7	66.1 W	68.0 W	66.1 W	68.0 W
	VID_VDD Min	9	1.100 V	1.100 V	1.100 V	1.100 V
	VID_VDD Max	9	1.150 V	1.150 V	1.150 V	1.150 V
	IDD Max	3,10	54.2 A	47.1 A	54.3 A	47.1 A
S0.C0.P1	CPU COF	6	1600 MHz		1600 MHz	
	TDP	3,7	63.6 W	65.7 W	61.1 W	63.5 W
	VID_VDD Min	9	1.100 V	1.100 V	1.100 V	1.100 V
	VID_VDD Max	9	1.150 V	1.125 V	1.150 V	1.125 V
	IDD Max	3,10	52.1 A	45.0 A	50.2 A	43.0 A
S0.C0.P2	CPU COF	6	1400 MHz		1400 MHz	
	TDP	3,7	58.5 W	58.3 W	56.1 W	56.3 W
	VID_VDD Min	9	1.100 V	1.075 V	1.100 V	1.075 V
	VID_VDD Max	9	1.150 V	1.100 V	1.150 V	1.100 V
	IDD Max	3,10	48.0 A	39.2 A	46.0 A	37.3 A
S0.C0.P3	CPU COF	6	1200 MHz		1200 MHz	
	TDP	3,7	53.5 W	54.0 W	51.1 W	52.0 W
	VID_VDD Min	9	1.100 V	1.075 V	1.100 V	1.075 V
	VID_VDD Max	9	1.150 V	1.075 V	1.150 V	1.075 V
	IDD Max	3,10	43.9 A	35.2 A	41.9 A	33.3 A
S0.C0.P4	CPU COF	6	1000 MHz		1000 MHz	
	TDP	3,7	48.7 W	47.5 W	46.6 W	45.6 W
	VID_VDD Min	9	1.100 V	1.050 V	1.100 V	1.050 V
	VID_VDD Max	9	1.150 V	1.050 V	1.150 V	1.050 V
	IDD Max	3,10	39.8 A	29.8 A	37.8 A	28.0 A
S0.C1.Pmin	IDD Max	3,10,14	21.5 A	10.1 A	19.1 A	8.1 A
S0	I/O Power	13	6.5 W	6.5 W	6.5 W	6.5 W
S3	I/O Power	13	350 mW	350 mW	350 mW	350 mW

The notes for this table are on page 80.

OPN			OS2347PAL4BGC OS8347PAL4BGC	
State	**Specification[8]**	**Notes**	**Single Plane**	**Dual Plane**
S0.C0.Px	Tcase Max	1	55 °C to 71 °C	
	Tctl Max	2	70 °C	
	Tambient Min		5 °C	
	Thermal Profile		B	
	Startup P-state	5	S0.C0.P4	
	HTC P-state	4	S0.C0.P4	
S0.Cx.Px	NB COF	6,15	1400 MHz	1600 MHz
	VID_VDDNB	11	N/A	1.150 V
	IDDNB Max	12	N/A	8.8 A
S0.C0.P0	CPU COF	6	1900 MHz	
	TDP	3,7	66.2 W	68.0 W
	VID_VDD Min	9	1.100 V	1.100 V
	VID_VDD Max	9	1.150 V	1.150 V
	IDD Max	3,10	54.5 A	47.6 A
S0.C0.P1	CPU COF	6	1700 MHz	
	TDP	3,7	61.2 W	63.5 W
	VID_VDD Min	9	1.100 V	1.100 V
	VID_VDD Max	9	1.150 V	1.125 V
	IDD Max	3,10	50.3 A	43.5 A
S0.C0.P2	CPU COF	6	1400 MHz	
	TDP	3,7	53.7 W	54.2 W
	VID_VDD Min	9	1.100 V	1.075 V
	VID_VDD Max	9	1.150 V	1.100 V
	IDD Max	3,10	44.2 A	35.9 A
S0.C0.P3	CPU COF	6	1200 MHz	
	TDP	3,7	49.1 W	49.9 W
	VID_VDD Min	9	1.100 V	1.075 V
	VID_VDD Max	9	1.150 V	1.075 V
	IDD Max	3,10	40.1 A	31.9 A
S0.C0.P4	CPU COF	6	1000 MHz	
	TDP	3,7	44.5 W	43.7 W
	VID_VDD Min	9	1.100 V	1.050 V
	VID_VDD Max	9	1.150 V	1.050 V
	IDD Max	3,10	36.0 A	26.8 A
S0.C1.Pmin	IDD Max	3,10,14	16.9 A	6.8 A
S0	I/O Power	13	6.5 W	6.5 W
S3	I/O Power	13	350 mW	350 mW

The notes for this table are on page 80.

2.3.2 OS mmmm PA pnc GD (79 W Server, Fr2 (1207)) Thermal and Power Specifications

OPN			OS2346PAL4BGD OS8346PAL4BGD		OS2347PAL4BGD OS8347PAL4BGD	
State	Specification[8]	Notes	Single-Plane	Dual-Plane	Single-Plane	Dual-Plane
S0.C0.Px	Tcase Max	1	55 °C to 76 °C		55 °C to 76 °C	
	Tctl Max	2	70 °C		70 °C	
	Tambient Min		5 °C		5 °C	
	Thermal Profile		E		E	
	Startup P-State	5	S0.C0.P4		S0.C0.P4	
	HTC P-State	4	S0.C0.P4		S0.C0.P4	
S0.Cx.Px	NB COF	6,15	1400 MHz	1600 MHz	1400 MHz	1600 MHz
	VID_VDDNB	11,15	N/A	1.125 V	N/A	1.125 V
	IDDNB Max	12	N/A	9.3 A	N/A	8.9 A
S0.C0.P0	CPU COF	6	1800 MHz		1900 MHz	
	TDP	3,7	76.9 W	77.6 W	77.1 W	77.8 W
	VID_VDD Min	9	1.075 V	1.075 V	1.075 V	1.075 V
	VID_VDD Max	9	1.125 V	1.125 V	1.125 V	1.125 V
	IDD Max	3,10	63.8 A	56.1 A	64.0 A	56.7 A
S0.C0.P1	CPU COF	6	1600 MHz		1700 MHz	
	TDP	3,7	71.8 W	72.4 W	72.0 W	72.7 W
	VID_VDD Min	9	1.075 V	1.075 V	1.075 V	1.075 V
	VID_VDD Max	9	1.125 V	1.125 V	1.125 V	1.125 V
	IDD Max	3,10	59.2 A	51.5 A	59.4 A	52.1 A
S0.C0.P2	CPU COF	6	1400 MHz		1400 MHz	
	TDP	3,7	66.6 W	63.3 W	64.2 W	61.2 W
	VID_VDD Min	9	1.075 V	1.050 V	1.075 V	1.050 V
	VID_VDD Max	9	1.125 V	1.075 V	1.125 V	1.075 V
	IDD Max	3,10	54.9 A	44.9 A	52.9 A	43.4 A
S0.C0.P3	CPU COF	6	1200 MHz		1200 MHz	
	TDP	3,7	61.5 W	55.4 W	59.1 W	53.8 W
	VID_VDD Min	9	1.075 V	1.025 V	1.075 V	1.025 V
	VID_VDD Max	9	1.125 V	1.050 V	1.125 V	1.050 V
	IDD Max	3,10	50.6 A	38.7 A	48.6 A	37.4 A
S0.C0.P4	CPU COF	6	1000 MHz		1000 MHz	
	TDP	3,7	56.3 W	48.7 W	53.9 W	46.9 W
	VID_VDD Min	9	1.075 V	1.000 V	1.075 V	1.000 V
	VID_VDD Max	9	1.125 V	1.000 V	1.125 V	1.000 V
	IDD Max	3,10	46.3 A	33.0 A	44.3 A	31.7 A
S0.C1.Pmin	IDD Max	3,10,14	25.6 A	10.3 A	23.3 A	9.1 A
S0	I/O Power	13	7.20 W	7.20 W	7.20 W	7.20 W
S3	I/O Power	13	350 mW	350 mW	350 mW	350 mW

The notes for this table are on page 80.

2.3.3 OS mmmm PA pnc GE (79 W Server, Fr2 (1207)) Thermal and Power Specifications

OPN			OS2344PAL4BGE		OS2346PAL4BGE OS8346PAL4BGE	
State	Specification[8]	Notes	Single-Plane	Dual-Plane	Single-Plane	Dual-Plane
S0.C0.Px	Tcase Max	1	55 °C to 71 °C		55 °C to 71 °C	
	Tctl Max	2	70 °C		70 °C	
	Tambient Min		5 °C		5 °C	
	Thermal Profile		B		B	
	Startup P-state	5	S0.C0.P4		S0.C0.P4	
	HTC P-state	4	S0.C0.P4		S0.C0.P4	
S0.Cx.Px	NB COF	6,15	1200 MHz	1400 MHz	1400 MHz	1600 MHz
	VID_VDDNB	11	N/A	1.150 V	N/A	1.150 V
	IDDNB Max	12	N/A	9.4 A	N/A	9.4 A
S0.C0.P0	CPU COF	6	1700 MHz		1800 MHz	
	TDP	3,7	66.1 W	68.0 W	66.1 W	68.0 W
	VID_VDD Min	9	1.100 V	1.100 V	1.100 V	1.100 V
	VID_VDD Max	9	1.150 V	1.150 V	1.150 V	1.150 V
	IDD Max	3,10	54.2 A	47.1 A	54.3 A	47.1 A
S0.C0.P1	CPU COF	6	1600 MHz		1600 MHz	
	TDP	3,7	63.6 W	65.7 W	61.1 W	63.5 W
	VID_VDD Min	9	1.100 V	1.100 V	1.100 V	1.100 V
	VID_VDD Max	9	1.150 V	1.125 V	1.150 V	1.125 V
	IDD Max	3,10	52.1 A	45.0 A	50.2 A	43.0 A
S0.C0.P2	CPU COF	6	1400 MHz		1400 MHz	
	TDP	3,7	58.5 W	58.3 W	56.1 W	56.3 W
	VID_VDD Min	9	1.100 V	1.075 V	1.100 V	1.075 V
	VID_VDD Max	9	1.150 V	1.100 V	1.150 V	1.100 V
	IDD Max	3,10	48.0 A	39.2 A	46.0 A	37.3 A
S0.C0.P3	CPU COF	6	1200 MHz		1200 MHz	
	TDP	3,7	53.5 W	54.0 W	51.1 W	52.0 W
	VID_VDD Min	9	1.100 V	1.075 V	1.100 V	1.075 V
	VID_VDD Max	9	1.150 V	1.075 V	1.150 V	1.075 V
	IDD Max	3,10	43.9 A	35.2 A	41.9 A	33.3 A
S0.C0.P4	CPU COF	6	1000 MHz		1000 MHz	
	TDP	3,7	48.7 W	47.5 W	46.6 W	45.6 W
	VID_VDD Min	9	1.100 V	1.050 V	1.100 V	1.050 V
	VID_VDD Max	9	1.150 V	1.050 V	1.150 V	1.050 V
	IDD Max	3,10	39.8 A	29.8 A	37.8 A	28.0 A
S0.C1.Pmin	IDD Max	3,10,14	21.5 A	10.1 A	19.1 A	8.1 A
S0	I/O Power	13	6.5 W	6.5 W	6.5 W	6.5 W
S3	I/O Power	13	350 mW	350 mW	350 mW	350 mW

The notes for this table are on page 80.

OPN			OS2347PAL4BGE OS8347PAL4BGE	
State	**Specification[8]**	**Notes**	**Single-Plane**	**Dual-Plane**
S0.C0.Px	Tcase Max	1	55 °C to 71 °C	
	Tctl Max	2	70 °C	
	Tambient Min		5 °C	
	Thermal Profile		B	
	Startup P-state	5	S0.C0.P4	
	HTC P-state	4	S0.C0.P4	
S0.Cx.Px	NB COF	6,15	1400 MHz	1600 MHz
	VID_VDDNB	11	N/A	1.150 V
	IDDNB Max	12	N/A	8.8 A
S0.C0.P0	CPU COF	6	1900 MHz	
	TDP	3,7	66.2 W	68.0 W
	VID_VDD Min	9	1.100 V	1.100 V
	VID_VDD Max	9	1.150 V	1.150 V
	IDD Max	3,10	54.5 A	47.6 A
S0.C0.P1	CPU COF	6	1700 MHz	
	TDP	3,7	61.2 W	63.5 W
	VID_VDD Min	9	1.100 V	1.100 V
	VID_VDD Max	9	1.150 V	1.125 V
	IDD Max	3,10	50.3 A	43.5 A
S0.C0.P2	CPU COF	6	1400 MHz	
	TDP	3,7	53.7 W	54.2 W
	VID_VDD Min	9	1.100 V	1.075 V
	VID_VDD Max	9	1.150 V	1.100 V
	IDD Max	3,10	44.2 A	35.9 A
S0.C0.P3	CPU COF	6	1200 MHz	
	TDP	3,7	49.1 W	49.9 W
	VID_VDD Min	9	1.100 V	1.075 V
	VID_VDD Max	9	1.150 V	1.075 V
	IDD Max	3,10	40.1 A	31.9 A
S0.C0.P4	CPU COF	6	1000 MHz	
	TDP	3,7	44.5 W	43.7 W
	VID_VDD Min	9	1.100 V	1.050 V
	VID_VDD Max	9	1.150 V	1.050 V
	IDD Max	3,10	36.0 A	26.8 A
S0.C1.Pmin	IDD Max	3,10,14	16.9 A	6.8 A
S0	I/O Power	13	6.5 W	6.5 W
S3	I/O Power	13	350 mW	350 mW

The notes for this table are on page 80.

2.3.4 OS mmmm WA pnc GC (115 W Server, Fr2 (1207)) Thermal and Power Specifications

OPN			OS2347WAL4BGC OS8347WAL4BGC		OS2350WAL4BGC OS8350WAL4BGC	
State	Specification[8]	Notes	Single-Plane	Dual-Plane	Single-Plane	Dual-Plane
S0.C0.Px	Tcase Max	1	55 °C to 70 °C		55 °C to 70 °C	
	Tctl Max	2	70 °C		70 °C	
	Tambient Min		5 °C		5 °C	
	Thermal Profile		A		A	
	Startup P-State	5	S0.C0.P4		S0.C0.P4	
	HTC P-State	4	S0.C0.P4		S0.C0.P4	
S0.Cx.Px	NB COF	6,15	1400 MHz	1600 MHz	1600 MHz	1800 MHz
	VID_VDDNB	11	N/A	1.200 V	N/A	1.200 V
	IDDNB Max	12	N/A	15.2 A	N/A	15.2 A
S0.C0.P0	CPU COF	6	1900 MHz		2000 MHz	
	TDP	3,7	94.1 W	95.0 W	94.1 W	95.0 W
	VID_VDD Min	9	1.100 V	1.100 V	1.100 V	1.100 V
	VID_VDD Max	9	1.200 V	1.200 V	1.200 V	1.200 V
	IDD Max	3,10	76.7 A	65.3 A	76.9 A	65.3 A
S0.C0.P1	CPU COF	6	1700 MHz		1700 MHz	
	TDP	3,7	88.6 W	90.5 W	85.8 W	88.2 W
	VID_VDD Min	9	1.100 V	1.100 V	1.100 V	1.100 V
	VID_VDD Max	9	1.200 V	1.175 V	1.200 V	1.175 V
	IDD Max	3,10	72.6 A	61.2 A	70.7 A	59.1 A
S0.C0.P2	CPU COF	6	1400 MHz		1400 MHz	
	TDP	3,7	80.2 W	79.3 W	77.5 W	77.2 W
	VID_VDD Min	9	1.100 V	1.075 V	1.100 V	1.075 V
	VID_VDD Max	9	1.200 V	1.125 V	1.200 V	1.125 V
	IDD Max	3,10	66.5 A	52.2 A	64.5 A	50.3 A
S0.C0.P3	CPU COF	6	1200 MHz		1200 MHz	
	TDP	3,7	74.7 W	75.0 W	72.0 W	72.9 W
	VID_VDD Min	9	1.100 V	1.075 V	1.100 V	1.075 V
	VID_VDD Max	9	1.200 V	1.075 V	1.200 V	1.075 V
	IDD Max	3,10	62.4 A	48.2 A	60.4 A	46.3 A
S0.C0.P4	CPU COF	6	1000 MHz		1000 MHz	
	TDP	3,7	69.5 W	67.0 W	67.0 W	65.2 W
	VID_VDD Min	9	1.100 V	1.050 V	1.100 V	1.050 V
	VID_VDD Max	9	1.200 V	1.050 V	1.200 V	1.050 V
	IDD Max	3,10	58.2 A	41.7 A	56.3 A	40.0 A
S0.C1.Pmin	IDD Max	3,10,14	43.4 A	23.4 A	41.0 A	21.5 A
S0	I/O Power	13	6.5 W	6.5 W	6.5 W	6.5 W
S3	I/O Power	13	350 mW	350 mW	350 mW	350 mW

The notes for this table are on page 80.

2.3.5 OE mmmm FM pnc GD (79 W Embedded Server, Fr2 (1207)) Thermal and Power Specifications

OPN			OE23GFFML4BGD	
State	Specification[8]	Notes	Single-Plane	Dual-Plane
S0.C0.Px	Tcase Max	1	55 °C to 86 °C	
	Tctl Max	2	70 °C	
	Tambient Min		5 °C	
	Thermal Profile		F	
	Startup P-State	5	S0.C0.P4	
	HTC P-State	4	S0.C0.P4	
S0.Cx.Px	NB COF	6,15	1400 MHz	1600 MHz
	VID_VDDNB	11,15	N/A	1.125 V
	IDDNB Max	12	N/A	9.8 A
S0.C0.P0	CPU COF	6	1700 MHz	
	TDP	3,7	76.7 W	77.4 W
	VID_VDD Min	9	1.075 V	1.075 V
	VID_VDD Max	9	1.125 V	1.125 V
	IDD Max	3,10	63.6 A	55.5 A
S0.C0.P1	CPU COF	6	1600 MHz	
	TDP	3,7	74.1 W	74.8 W
	VID_VDD Min	9	1.075 V	1.075 V
	VID_VDD Max	9	1.125 V	1.125 V
	IDD Max	3,10	61.3 A	53.2 A
S0.C0.P2	CPU COF	6	1400 MHz	
	TDP	3,7	69.0 W	66.1 W
	VID_VDD Min	9	1.075 V	1.050 V
	VID_VDD Max	9	1.125 V	1.100 V
	IDD Max	3,10	56.9 A	46.5 A
S0.C0.P3	CPU COF	6	1200 MHz	
	TDP	3,7	63.8 W	57.6 W
	VID_VDD Min	9	1.075 V	1.025 V
	VID_VDD Max	9	1.125 V	1.050 V
	IDD Max	3,10	52.6 A	40.1 A
S0.C0.P4	CPU COF	6	1000 MHz	
	TDP	3,7	58.7 W	50.4 W
	VID_VDD Min	9	1.075 V	1.000 V
	VID_VDD Max	9	1.125 V	1.000 V
	IDD Max	3,10	48.3 A	34.2 A
S0.C1.Pmin	IDD Max	3,10,14	27.8 A	11.4 A
S0	I/O Power	13	7.2 W	7.2 W
S3	I/O Power	13	350 mW	350 mW

The notes for this table are on page 80.

2.3.6 OS mmmm WE pnc GD (95 W Server, AM2r2) Thermal and Power Specifications

OPN			OS1354WEJ4BGD	
State	Specification[8]	Notes	Single-Plane	Dual-Plane
S0.C0.Px	Tcase Max	1	55 °C to 70 °C	
	Tctl Max	2	70 °C	
	Tambient min		5 °C	
	Thermal Profile		A	
	Startup P-State	5	S0.C0.P4	
	HTC P-State	4	S0.C0.P4	
S0.Cx.Px	NB COF	6,15	1600 MHz	1800 MHz
	VID_VDDNB	11,15	N/A	1.200 V
	IDDNB Max	12	N/A	12.5 A
S0.C0.P0	CPU COF	6	2200 MHz	
	TDP	3,7	94.3 W	95.0 W
	VID_VDD Min	9	1.100 V	1.100 V
	VID_VDD Max	9	1.200 V	1.200 V
	IDD Max	3,10	78.1 A	68.6 A
S0.C0.P1	CPU COF	6	2000 MHz	
	TDP	3,7	88.6 W	90.4 W
	VID_VDD Min	9	1.100 V	1.100 V
	VID_VDD Max	9	1.200 V	1.150 V
	IDD Max	3,10	73.9 A	64.4 A
S0.C0.P2	CPU COF	6	1700 MHz	
	TDP	3,7	79.9 W	78.9 W
	VID_VDD Min	9	1.100 V	1.075 V
	VID_VDD Max	9	1.200 V	1.100 V
	IDD Max	3,10	67.5 A	55.2 A
S0.C0.P3	CPU COF	6	1400 MHz	
	TDP	3,7	72.0 W	68.4 W
	VID_VDD Min	9	1.100 V	1.050 V
	VID_VDD Max	9	1.200 V	1.050 V
	IDD Max	3,10	61.2 A	46.6 A
S0.C0.P4	CPU COF	6	1100 MHz	
	TDP	3,7	64.9 W	62.2 W
	VID_VDD Min	9	1.100 V	1.050 V
	VID_VDD Max	9	1.200 V	1.050 V
	IDD Max	3,10	54.9 A	40.7 A
S0.C1.Pmin	IDD Max	3,10,14	36.7 A	19.9 A
S0	I/O Power	13	6.50 W	6.50 W
S3	I/O Power	13	350 mW	350 mW

The notes for this table are on page 80.

2.3.7 OS mmmm WA pnc GE (115 W Server, Fr2 (1207)) Thermal and Power Specifications

OPN			OS2347WAL4BGE OS8347WAL4BGE		OS2350WAL4BGE OS8350WAL4BGE	
State	**Specification[8]**	**Notes**	**Single-Plane**	**Dual-Plane**	**Single-Plane**	**Dual-Plane**
S0.C0.Px	Tcase Max	1	55 °C to 70 °C		55 °C to 70 °C	
	Tctl Max	2	70 °C		70 °C	
	Tambient Min		5 °C		5 °C	
	Thermal Profile		A		A	
	Startup P-State	5	S0.C0.P4		S0.C0.P4	
	HTC P-State	4	S0.C0.P4		S0.C0.P4	
S0.Cx.Px	NB COF	6,15	1400 MHz	1600 MHz	1600 MHz	1800 MHz
	VID_VDDNB	11	N/A	1.200 V	N/A	1.200 V
	IDDNB Max	12	N/A	15.2 A	N/A	15.2 A
S0.C0.P0	CPU COF	6	1900 MHz		2000 MHz	
	TDP	3,7	94.1 W	95.0 W	94.1 W	95.0 W
	VID_VDD Min	9	1.100 V	1.100 V	1.100 V	1.100 V
	VID_VDD Max	9	1.200 V	1.200 V	1.200 V	1.200 V
	IDD Max	3,10	76.7 A	65.3 A	76.9 A	65.3 A
S0.C0.P1	CPU COF	6	1700 MHz		1700 MHz	
	TDP	3,7	88.6 W	90.5 W	85.8 W	88.2 W
	VID_VDD Min	9	1.100 V	1.100 V	1.100 V	1.100 V
	VID_VDD Max	9	1.200 V	1.175 V	1.200 V	1.175 V
	IDD Max	3,10	72.6 A	61.2 A	70.7 A	59.1 A
S0.C0.P2	CPU COF	6	1400 MHz		1400 MHz	
	TDP	3,7	80.2 W	79.3 W	77.5 W	77.2 W
	VID_VDD Min	9	1.100 V	1.075 V	1.100 V	1.075 V
	VID_VDD Max	9	1.200 V	1.125 V	1.200 V	1.125 V
	IDD Max	3,10	66.5 A	52.2 A	64.5 A	50.3 A
S0.C0.P3	CPU COF	6	1200 MHz		1200 MHz	
	TDP	3,7	74.7 W	75.0 W	72.0 W	72.9 W
	VID_VDD Min	9	1.100 V	1.075 V	1.100 V	1.075 V
	VID_VDD Max	9	1.200 V	1.075 V	1.200 V	1.075 V
	IDD Max	3,10	62.4 A	48.2 A	60.4 A	46.3 A
S0.C0.P4	CPU COF	6	1000 MHz		1000 MHz	
	TDP	3,7	69.5 W	67.0 W	67.0 W	65.2 W
	VID_VDD Min	9	1.100 V	1.050 V	1.100 V	1.050 V
	VID_VDD Max	9	1.200 V	1.050 V	1.200 V	1.050 V
	IDD Max	3,10	58.2 A	41.7 A	56.3 A	40.0 A
S0.C1.Pmin	IDD Max	3,10,14	43.4 A	23.4 A	41.0 A	21.5 A
S0	I/O Power	13	6.5 W	6.5 W	6.5 W	6.5 W
S3	I/O Power	13	350 mW	350 mW	350 mW	350 mW

The notes for this table are on page 80.

2.3.8 OS mmmm WA pnc GD (115 W Server, Fr2 (1207)) Thermal and Power Specifications

OPN			OS2350WAL4BGD OS8350WAL4BGD		OS2352WAL4BGD	
State	Specification[8]	Notes	Single-Plane	Dual-Plane	Single-Plane	Dual-Plane
S0.C0.Px	Tcase Max	1	55 °C to 76 °C		55 °C to 76 °C	
	Tctl Max	2	70 °C		70 °C	
	Tambient Min		5 °C		5 °C	
	Thermal Profile		D		D	
	Startup P-State	5	S0.C0.P4		S0.C0.P4	
	HTC P-State	4	S0.C0.P4		S0.C0.P4	
S0.Cx.Px	NB COF	6,15	1600 MHz	1800 MHz	1600 MHz	1800 MHz
	VID_VDDNB	11,15	N/A	1.250 V	N/A	1.250 V
	IDDNB Max	12	N/A	14.4 A	N/A	13.9 A
S0.C0.P0	CPU COF	6	2000 MHz		2100 MHz	
	TDP	3,7	114.1 W	115 W	114.1 W	115 W
	VID_VDD Min	9	1.150 V	1.150 V	1.150 V	1.150 V
	VID_VDD Max	9	1.250 V	1.250 V	1.250 V	1.250 V
	IDD Max	3,10	88.6 A	77.9 A	89.0A	78.7
S0.C0.P1	CPU COF	6	1700 MHz		1800 MHz	
	TDP	3,7	103.5 W	94.6 W	103.5 W	94.8 W
	VID_VDD Min	9	1.150 V	1.100 V	1.150 V	1.100 V
	VID_VDD Max	9	1.250 V	1.200 V	1.250 V	1.200 V
	IDD Max	3,10	80.5 A	63.2 A	80.9 A	64.1 A
S0.C0.P2	CPU COF	6	1400 MHz		1600 MHz	
	TDP	3,7	92.8 W	80.5 W	96.4 W	83.4 W
	VID_VDD Min	9	1.150 V	1.075 V	1.150 V	1.075 V
	VID_VDD Max	9	1.250 V	1.100 V	1.250 V	1.150 V
	IDD Max	3,10	72.9 A	53.3 A	75.8 A	56.6 A
S0.C0.P3	CPU COF	6	1200 MHz		1300 MHz	
	TDP	3,7	85.7 W	71.7 W	86.2 W	72.1 W
	VID_VDD Min	9	1.150 V	1.050 V	1.150 V	1.050 V
	VID_VDD Max	9	1.250 V	1.050 V	1.250 V	1.050 V
	IDD Max	3,10	67.8 A	46.2 A	68.2 A	47.2 A
S0.C0.P4	CPU COF	6	1000 MHz		1050 MHz	
	TDP	3,7	79.2 W	67.0 W	78.1 W	66.2 W
	VID_VDD Min	9	1.150 V	1.050 V	1.150 V	1.050 V
	VID_VDD Max	9	1.250 V	1.050 V	1.250 V	1.050 V
	IDD Max	3,10	62.7 A	41.7 A	61.8 A	41.6 A
S0.C1.Pmin	IDD Max	3,10,14	43.5 A	18.8 A	40.8 A	17.4 A
S0	I/O Power	13	7.2 W	7.2 W	7.2 W	7.2 W
S3	I/O Power	13	350 mW	350 mW	350 mW	350 mW

The notes for this table are on page 80.

OPN			OS2354WAL4BGD OS8354WAL4BGD		OS2356WAL4BGD OS8356WAL4BGD	
State	**Specification**[8]	**Notes**	**Single-Plane**	**Dual-Plane**	**Single-Plane**	**Dual-Plane**
S0.C0.Px	Tcase Max	1	55 °C to 76 °C		55 °C to 76 °C	
	Tctl Max	2	70 °C		70 °C	
	Tambient Min		5 °C		5 °C	
	Thermal Profile		D		D	
	Startup P-State	5	S0.C0.P4		S0.C0.P4	
	HTC P-State	4	S0.C0.P4		S0.C0.P4	
S0.Cx.Px	NB COF	6,15	1600 MHz	1800 MHz	1600 MHz	2000 MHz
	VID_VDDNB	11,15	N/A	1.250 V	N/A	1.250 V
	IDDNB Max	12	N/A	13.3 A	N/A	13.4 A
S0.C0.P0	CPU COF	6	2200 MHz		2300 MHz	
	TDP	3,7	114.1 W	115 W	113.3 W	115 W
	VID_VDD Min	9	1.150 V	1.150 V	1.150 V	1.150 V
	VID_VDD Max	9	1.250 V	1.250 V	1.250 V	1.250 V
	IDD Max	3,10	89.3 A	79.4 A	89.3 A	79.5 A
S0.C0.P1	CPU COF	6	2000 MHz		2000 MHz	
	TDP	3,7	107.0 W	101.1 W	102.6 W	99.5 W
	VID_VDD Min	9	1.150 V	1.125 V	1.150 V	1.125 V
	VID_VDD Max	9	1.250 V	1.175 V	1.250 V	1.150 V
	IDD Max	3,10	83.9 A	70.5 A	81.6 A	68.9 A
S0.C0.P2	CPU COF	6	1700 MHz		1700 MHz	
	TDP	3,7	96.4 W	83.7 W	92.3 W	82.4 W
	VID_VDD Min	9	1.150 V	1.075 V	1.150 V	1.075 V
	VID_VDD Max	9	1.250 V	1.100 V	1.250 V	1.100 V
	IDD Max	3,10	76.2 A	57.6 A	74.0 A	56.2 A
S0.C0.P3	CPU COF	6	1400 MHz		1400 MHz	
	TDP	3,7	86.5 W	72.5 W	82.6 W	71.4 W
	VID_VDD Min	9	1.150 V	1.050 V	1.150 V	1.050 V
	VID_VDD Max	9	1.250 V	1.050 V	1.250 V	1.050 V
	IDD Max	3,10	68.6 A	48.2 A	66.4 A	47.0 A
S0.C0.P4	CPU COF	6	1100 MHz		1150 MHz	
	TDP	3,7	76.8 W	65.4 W	74.5 W	65.4 W
	VID_VDD Min	9	1.150 V	1.050 V	1.150 V	1.050 V
	VID_VDD Max	9	1.250 V	1.050 V	1.250 V	1.050 V
	IDD Max	3,10	60.9 A	41.5 A	60.0 A	41.4 A
S0.C1.Pmin	IDD Max	3,10,14	38.0 A	16.0 A	36.0 A	14.6 A
S0	I/O Power	13	7.2 W	7.2 W	7.2 W	7.2 W
S3	I/O Power	13	350 mW	350 mW	350 mW	350 mW

The notes for this table are on page 80.

2.3.9 OS mmmm WB pnc GD (115 W Server, AM2r2) Thermal and Power Specifications

OPN			OS1352WBJ4BGD		OS1354WBJ4BGD	
State	Specification[8]	Notes	Single-Plane	Dual-Plane	Single-Plane	Dual-Plane
S0.C0.Px	Tcase Max	1	55 °C to 76 °C		55 °C to 76 °C	
	Tctl Max	2	70 °C		70 °C	
	Tambient Min		5 °C		5 °C	
	Thermal Profile		D		D	
	Startup P-State	5	S0.C0.P4		S0.C0.P4	
	HTC P-State	4	S0.C0.P4		S0.C0.P4	
S0.Cx.Px	NB COF	6,15	1600 MHz	1800 MHz	1600 MHz	1800 MHz
	VID_VDDNB	11,15	N/A	1.250 V	N/A	1.250 V
	IDDNB Max	12	N/A	14.0 A	N/A	13.4 A
S0.C0.P0	CPU COF	6	2100 MHz		2200 MHz	
	TDP	3,7	114.1 W	115.0 W	114.1 W	115.0 W
	VID_VDD Min	9	1.150 V	1.150 V	1.150 V	1.150 V
	VID_VDD Max	9	1.250 V	1.250 V	1.250 V	1.250 V
	IDD Max	3,10	89.8 A	79.5 A	89.8 A	80.0 A
S0.C0.P1	CPU COF	6	1800 MHz		2000 MHz	
	TDP	3,7	102.8 W	104.8 W	106.6 W	107.9 W
	VID_VDD Min	9	1.150 V	1.150 V	1.150 V	1.150 V
	VID_VDD Max	9	1.250 V	1.250 V	1.250 V	1.250 V
	IDD Max	3,10	81.4 A	71.0 A	84.5 A	74.3 A
S0.C0.P2	CPU COF	6	1600 MHz		1700 MHz	
	TDP	3,7	95.3 W	88.4 W	95.3 W	88.3 W
	VID_VDD Min	9	1.150 V	1.100 V	1.150 V	1.100 V
	VID_VDD Max	9	1.250 V	1.200 V	1.250 V	1.175 V
	IDD Max	3,10	76.1 A	59.8 A	76.5 A	60.5 A
S0.C0.P3	CPU COF	6	1300 MHz		1400 MHz	
	TDP	3,7	85.0 W	75.2 W	84.9 W	75.5 W
	VID_VDD Min	9	1.150 V	1.075 V	1.150 V	1.075 V
	VID_VDD Max	9	1.250 V	1.125 V	1.250 V	1.125 V
	IDD Max	3,10	68.1 A	49.5 A	68.5 A	50.5 A
S0.C0.P4	CPU COF	6	1050 MHz		1100 MHz	
	TDP	3,7	76.5 W	65.3 W	74.7 W	64.4 W
	VID_VDD Min	9	1.150 V	1.050 V	1.150 V	1.050 V
	VID_VDD Max	9	1.250 V	1.050 V	1.250 V	1.050 V
	IDD Max	3,10	61.5 A	41.2 A	60.6 A	41.1 A
S0.C1.Pmin	IDD Max	3,10,14	39.7 A	17.4 A	37.0 A	19.9 A
S0	I/O Power	13	7.2 W	7.2 W	7.2 W	7.2 W
S3	I/O Power	13	350 mW	350 mW	350 mW	350 mW

The notes for this table are on page 80.

2.3.10 OS mmmm YA pnc GD (137 W Server, Fr2 (1207)) Thermal and Power Specifications

OPN			OS2358YAL4BGD OS8358YAL4BGD		OS2360YAL4BGD OS8360YAL4BGD	
State	**Specification**[8]	**Notes**	**Single-Plane**	**Dual-Plane**	**Single-Plane**	**Dual-Plane**
S0.C0.Px	Tcase Max	1	55 °C to 71 °C		55 °C to 71 °C	
	Tctl Max	2	70 °C		70 °C	
	Tambient Min		5 °C		5 °C	
	Thermal Profile		C		C	
	Startup P-State	5	S0.C0.P4		S0.C0.P4	
	HTC P-State	4	S0.C0.P4		S0.C0.P4	
S0.Cx.Px	NB COF	6,15	1600 MHz	2000 MHz	1600 MHz	2000 MHz
	VID_VDDNB	11,15	N/A	1.250 V	N/A	1.250 V
	IDDNB Max	12	N/A	14.6 A	N/A	14.1 A
S0.C0.P0	CPU COF	6	2400 MHz		2500 MHz	
	TDP	3,7	135.3 W	137 W	135.3 W	137 W
	VID_VDD Min	9	1.200 V	1.200 V	1.200 V	1.200 V
	VID_VDD Max	9	1.250 V	1.250 V	1.250 V	1.250 V
	IDD Max	3,10	105.0 A	93.5 A	105.0 A	94.3 A
S0.C0.P1	CPU COF	6	2100 MHz		2200 MHz	
	TDP	3,7	124.6 W	113.3 W	124.6 W	126.3 W
	VID_VDD Min	9	1.200 V	1.150 V	1.200 V	1.200 V
	VID_VDD Max	9	1.250 V	1.175 V	1.250 V	1.200 V
	IDD Max	3,10	97.2 A	78.1 A	97.6 A	86.2 A
S0.C0.P2	CPU COF	6	1800 MHz		1900 MHz	
	TDP	3,7	114 W	94.6 W	114 W	94.7 W
	VID_VDD Min	9	1.200 V	1.100 V	1.200 V	1.100 V
	VID_VDD Max	9	1.250 V	1.100 V	1.250 V	1.100 V
	IDD Max	3,10	89.2 A	64.3 A	89.6 A	65.3 A
S0.C0.P3	CPU COF	6	1500 MHz		1600 MHz	
	TDP	3,7	103.3 W	77.9 W	103.3 W	78.5 W
	VID_VDD Min	9	1.200 V	1.050 V	1.200 V	1.050 V
	VID_VDD Max	9	1.250 V	1.050 V	1.250 V	1.050 V
	IDD Max	3,10	81.1 A	51.8 A	81.5 A	53 A
S0.C0.P4	CPU COF	6	1200 MHz		1250 MHz	
	TDP	3,7	92.8 W	70.8 W	91.7 A	70.2 A
	VID_VDD Min	9	1.200 V	1.050 V	1.200 V	1.050 V
	VID_VDD Max	9	1.250 V	1.050 V	1.250 V	1.050 V
	IDD Max	3,10	73.0 A	45.1 A	72.1 A	45.1 A
S0.C1. Pmin	IDD Max	3,10,14	44.1 A	17.5 A	41.5 A	16.3 A
S0	I/O Power	13	7.2 W	7.2 W	7.2 W	7.2 W
S3	I/O Power	13	350 mW	350 mW	350 mW	350 mW

The notes for this table are on page 80.

2.3.11 OS mmmm WA pnc GH (115 W Server, Fr2 (1207)) Thermal and Power Specifications

OPN			OS2350WAL4BGH OS8350WAL4BGH		OS2352WAL4BGH	
State	Specification[8]	Notes	Single-Plane	Dual-Plane	Single-Plane	Dual-Plane
S0.C0.Px	Tcase Max	1	55 °C to 76 °C		55 °C to 76 °C	
	Tctl Max	2	70 °C		70 °C	
	Tambient Min		5 °C		5 °C	
	Thermal Profile		D		D	
	Startup P-State	5	S0.C0.P4		S0.C0.P4	
	HTC P-State	4	S0.C0.P4		S0.C0.P4	
S0.Cx.Px	NB COF	6,15	1600 MHz	1800 MHz	1600 MHz	1800 MHz
	VID_VDDNB	11,15	N/A	1.250 V	N/A	1.250 V
	IDDNB	12	N/A	14.9 A	N/A	14.3 A
S0.C0.P0	CPU COF	6	2000 MHz		2100 MHz	
	TDP	3,7	114.1 W	115.0 W	114.1 W	115.0 W
	VID_VDD Min	9	1.150 V	1.150 V	1.150 V	1.150 V
	VID_VDD Max	9	1.250 V	1.250 V	1.250 V	1.250 V
	IDD Max	3,10	88.8 A	77.5 A	89.2 A	78.5 A
S0.C0.P1	CPU COF	6	1700 MHz		1800 MHz	
	TDP	3,7	102.8 W	104.4 W	102.8 W	104.8 W
	VID_VDD Min	9	1.150 V	1.150 V	1.150 V	1.150 V
	VID_VDD Max	9	1.250 V	1.250 V	1.250 V	1.250 V
	IDD Max	3,10	80.3 A	69.0 A	80.7 A	70.0 A
S0.C0.P2	CPU COF	6	1400 MHz		1600 MHz	
	TDP	3,7	91.5 W	85.0 W	95.3 W	88.6 W
	VID_VDD Min	9	1.150 V	1.100 V	1.150 V	1.100 V
	VID_VDD Max	9	1.250 V	1.175 V	1.250 V	1.200 V
	IDD Max	3,10	72.3 A	55.2 A	75.3 A	58.9 A
S0.C0.P3	CPU COF	6	1200 MHz		1300 MHz	
	TDP	3,7	84.5 W	74.9 W	85.1 W	75.2 W
	VID_VDD Min	9	1.150 V	1.075 V	1.150 V	1.075 V
	VID_VDD Max	9	1.250 V	1.125 V	1.250 V	1.125 V
	IDD Max	3,10	66.9 A	47.5 A	67.3 A	48.5 A
S0.C0.P4	CPU COF	6	1000 MHz		1050 MHz	
	TDP	3,7	77.7 W	66.4 W	76.6 W	65.5 W
	VID_VDD Min	9	1.150 V	1.050 V	1.150 V	1.050 V
	VID_VDD Max	9	1.250 V	1.050 V	1.250 V	1.050 V
	IDD Max	3,10	61.6 A	40.5 A	60.7 A	40.4 A
S0.C1.Pmin	IDD Max	3,10,14	25.2 A	7.1 A	23.5 A	6.4 A
S0	I/O Power	13	7.2 W	7.2 W	7.2 W	7.2 W
S3	I/O Power	13	350 mW	350 mW	350 mW	350 mW

The notes for this table are on page 80.

OPN			OS2354WAL4BGH OS8354WAL4BGH		OS2356WAL4BGH OS8356WAL4BGH	
State	**Specification[8]**	**Notes**	**Single-Plane**	**Dual-Plane**	**Single-Plane**	**Dual-Plane**
S0.C0.Px	Tcase Max	1	55 °C to 76 °C		55 °C to 76 °C	
	Tctl Max	2	70 °C		70 °C	
	Tambient Min		5 °C		5 °C	
	Thermal Profile		D		D	
	Startup P-State	5	S0.C0.P4		S0.C0.P4	
	HTC P-State	4	S0.C0.P4		S0.C0.P4	
S0.Cx.Px	NB COF	6,15	1600 MHz	1800 MHz	1600 MHz	2000 MHz
	VID_VDDNB	11,15	N/A	1.250 V	N/A	1.250 V
	IDDNB	12	N/A	13.7 A	N/A	13.8 A
S0.C0.P0	CPU COF	6	2200 MHz		2300 MHz	
	TDP	3,7	114.1 W	115.0 W	113.2 W	115.0 W
	VID_VDD Min	9	1.150 V	1.150 V	1.150 V	1.150 V
	VID_VDD Max	9	1.250 V	1.250 V	1.250 V	1.250 V
	IDD Max	3,10	89.3 A	79.1 A	89.5 A	79.2 A
S0.C0.P1	CPU COF	6	2000 MHz		2000 MHz	
	TDP	3,7	106.6 W	108.2 W	101.9 W	104.8 W
	VID_VDD Min	9	1.150 V	1.150 V	1.150 V	1.150 V
	VID_VDD Max	9	1.250 V	1.250 V	1.250 V	1.250 V
	IDD Max	3,10	83.7 A	73.5 A	81.5 A	71.2 A
S0.C0.P2	CPU COF	6	1700 MHz		1700 MHz	
	TDP	3,7	95.4 W	88.8 W	91.3 W	86.1 W
	VID_VDD Min	9	1.150 V	1.100 V	1.150 V	1.100 V
	VID_VDD Max	9	1.250 V	1.175 V	1.250 V	1.175 V
	IDD Max	3,10	75.7 A	59.8 A	73.5 A	57.9 A
S0.C0.P3	CPU COF	6	1400 MHz		1400 MHz	
	TDP	3,7	85.2 W	75.6 W	81.1 W	74.2 W
	VID_VDD Min	9	1.150 V	1.075 V	1.150 V	1.075 V
	VID_VDD Max	9	1.250 V	1.125 V	1.250 V	1.100 V
	IDD Max	3,10	67.8 A	49.5 A	65.5 A	48.1 A
S0.C0.P4	CPU COF	6	1100 MHz		1150 MHz	
	TDP	3,7	75.0 W	64.6 W	72.9 W	64.6 W
	VID_VDD Min	9	1.150 V	1.050 V	1.150 V	1.050 V
	VID_VDD Max	9	1.250 V	1.050 V	1.250 V	1.050 V
	IDD Max	3,10	59.8 A	40.3 A	58.8 A	40.1 A
S0.C1.Pmin	IDD Max	3,10,14	21.9 A	5.7 A	21.0 A	5.0 A
S0	I/O Power	13	7.2 W	7.2 W	7.2 W	7.2 W
S3	I/O Power	13	350 mW	350 mW	350 mW	350 mW

The notes for this table are on page 80.

2.3.12 OS mmmm PA pnc GH (79 W Server, Fr2 (1207)) Thermal and Power Specifications

OPN			OS2344PAL4BGH		OS2346PAL4BGH OS8346PAL4BGH	
State	Specification[8]	Notes	Single-Plane	Dual-Plane	Single-Plane	Dual-Plane
S0.C0.Px	Tcase Max	1	55 °C to 76 °C		55 °C to 76 °C	
	Tctl Max	2	70 °C		70 °C	
	Tambient Min		5 °C		5 °C	
	Thermal Profile		E		E	
	Startup P-State	5	S0.C0.P4		S0.C0.P4	
	HTC P-State	4	S0.C0.P4		S0.C0.P4	
S0.Cx.Px	NB COF	6,15	1400 MHz	1600 MHz	1400 MHz	1600 MHz
	VID_VDDNB	11,15	N/A	1.125 V	N/A	1.125 V
	IDDNB Max	12	N/A	10.4 A	N/A	9.9 A
S0.C0.P0	CPU COF	6	1700 MHz		1800 MHz	
	TDP	3,7	76.8 W	77.5 W	77.0 W	77.7 W
	VID_VDD Min	9	1.075 V	1.075 V	1.075 V	1.075 V
	VID_VDD Max	9	1.125 V	1.125 V	1.125 V	1.125 V
	IDD Max	3,10	63.6 A	55.0 A	63.8 A	55.7 A
S0.C0.P1	CPU COF	6	1600 MHz		1600 MHz	
	TDP	3,7	74.1 W	74.8 W	71.6 W	72.3 W
	VID_VDD Min	9	1.075 V	1.075 V	1.075 V	1.075 V
	VID_VDD Max	9	1.125 V	1.125 V	1.125 V	1.125 V
	IDD Max	3,10	61.2 A	52.6 A	59.1 A	50.9 A
S0.C0.P2	CPU COF	6	1400 MHz		1400 MHz	
	TDP	3,7	68.7 W	65.9 W	66.2 W	63.1 W
	VID_VDD Min	9	1.075 V	1.050 V	1.075 V	1.050 V
	VID_VDD Max	9	1.125 V	1.100 V	1.125 V	1.075 V
	IDD Max	3,10	56.7 A	45.8 A	54.6 A	44.1 A
S0.C0.P3	CPU COF	6	1200 MHz		1200 MHz	
	TDP	3,7	63.3 W	57.4 W	60.9 W	55.1 W
	VID_VDD Min	9	1.075 V	1.025 V	1.075 V	1.025 V
	VID_VDD Max	9	1.125 V	1.050 V	1.125 V	1.050 V
	IDD Max	3,10	52.2 A	39.2 A	50.1 A	37.8 A
S0.C0.P4	CPU COF	6	1000 MHz		1000 MHz	
	TDP	3,7	57.9 W	50.1 W	55.5 W	48.3 W
	VID_VDD Min	9	1.075 V	1.000 V	1.075 V	1.000 V
	VID_VDD Max	9	1.125 V	1.000 V	1.125 V	1.000 V
	IDD Max	3,10	47.7 A	33.2 A	45.7 A	32.0 A
S0.C1.Pmin	IDD Max	3,10,14	17.0 A	5.1 A	15.7 A	4.5 A
S0	I/O Power	13	7.2 W	7.2 W	7.2 W	7.2 W
S3	I/O Power	13	350 mW	350 mW	350 mW	350 mW

The notes for this table are on page 80.

OPN			OS2347PAL4BGH OS8347PAL4BGH		OS2350PAL4BGH OS8350PAL4BGH	
State	**Specification[8]**	**Notes**	**Single-Plane**	**Dual-Plane**	**Single-Plane**	**Dual-Plane**
S0.C0.Px	Tcase Max	1	55 °C to 76 °C		55 °C to 76 °C	
	Tctl Max	2	70 °C		70 °C	
	Tambient Min		5 °C		5 °C	
	Thermal Profile		E		E	
	Startup P-State	5	S0.C0.P4		S0.C0.P4	
	HTC P-State	4	S0.C0.P4		S0.C0.P4	
S0.Cx.Px	NB COF	6,15	1400 MHz	1600 MHz	1400 MHz	1800 MHz
	VID_VDDNB	11,15	N/A	1.125 V	N/A	1.125 V
	IDDNB Max	12	N/A	9.4 A	N/A	9.6 A
S0.C0.P0	CPU COF	6	1900 MHz		2000 MHz	
	TDP	3,7	77.2 W	78.0 W	77.5 W	78.9 W
	VID_VDD Min	9	1.075 V	1.075 V	1.075 V	1.075 V
	VID_VDD Max	9	1.125 V	1.125 V	1.125 V	1.125 V
	IDD Max	3,10	64.0 A	56.3 A	64.3 A	57.0 A
S0.C0.P1	CPU COF	6	1700 MHz		1700 MHz	
	TDP	3,7	71.9 W	72.6 W	69.4 W	70.8 W
	VID_VDD Min	9	1.075 V	1.075 V	1.075 V	1.075 V
	VID_VDD Max	9	1.125 V	1.125 V	1.125 V	1.125 V
	IDD Max	3,10	59.3 A	51.5 A	57.3 A	49.8 A
S0.C0.P2	CPU COF	6	1400 MHz		1400 MHz	
	TDP	3,7	63.8 W	60.9 W	61.3 W	59.4 W
	VID_VDD Min	9	1.075 V	1.050 V	1.075 V	1.050 V
	VID_VDD Max	9	1.125 V	1.075 V	1.125 V	1.075 V
	IDD Max	3,10	52.6 A	42.5 A	50.5 A	41.0 A
S0.C0.P3	CPU COF	6	1200 MHz		1200 MHz	
	TDP	3,7	58.4 W	53.4 W	56.0 W	52.1 W
	VID_VDD Min	9	1.075 V	1.025 V	1.075 V	1.025 V
	VID_VDD Max	9	1.125 V	1.050 V	1.125 V	1.050 V
	IDD Max	3,10	48.1 A	36.4 A	46.1 A	35.1 A
S0.C0.P4	CPU COF	6	1000 MHz		1000 MHz	
	TDP	3,7	53.0 W	46.5 W	50.6 W	45.5 W
	VID_VDD Min	9	1.075 V	1.000 V	1.075 V	1.000 V
	VID_VDD Max	9	1.125 V	1.000 V	1.125 V	1.000 V
	IDD Max	3,10	43.6 A	30.7 A	41.6 A	29.5 A
S0.C1.Pmin	IDD Max	3,10,14	14.3 A	3.8 A	13.6 A	3.1 A
S0	I/O Power	13	7.2 W	7.2 W	7.2 W	7.2 W
S3	I/O Power	13	350 mW	350 mW	350 mW	350 mW

The notes for this table are on page 80.

2.3.13 OS mmmm YA pnc GH (137 W Server, Fr2 (1207)) Thermal and Power Specifications

OPN			OS2358YAL4BGH OS8358YAL4BGH		OS2360YAL4BGH OS8360YAL4BGH	
State	**Specification[8]**	**Notes**	**Single-Plane**	**Dual-Plane**	**Single-Plane**	**Dual-Plane**
S0.C0.Px	Tcase Max	1	55 °C to 71 °C		55 °C to 71 °C	
	Tctl Max	2	70 °C		70 °C	
	Tambient Min		5 °C		5 °C	
	Thermal Profile		C		C	
	Startup P-State	5	S0.C0.P4		S0.C0.P4	
	HTC P-State	4	S0.C0.P4		S0.C0.P4	
S0.Cx.Px	NB COF	6,15	1600 MHz	2000 MHz	1600 MHz	2000 MHz
	VID_VDDNB	11,15	N/A	1.250 V	N/A	1.250 V
	IDDNB Max	12	N/A	15.0 A	N/A	14.5 A
S0.C0.P0	CPU COF	6	2400 MHz		2500 MHz	
	TDP	3,7	135.2 W	137.0 W	135.2 W	137.0 W
	VID_VDD Min	9	1.200 V	1.200 V	1.200 V	1.200 V
	VID_VDD Max	9	1.250 V	1.250 V	1.250 V	1.250 V
	IDD Max	3,10	105.5 A	93.2 A	106.0 A	94.1 A
S0.C0.P1	CPU COF	6	2100 MHz		2200 MHz	
	TDP	3,7	123.9 W	125.7 W	123.9 W	126.1 W
	VID_VDD Min	9	1.200 V	1.200 V	1.200 V	1.200 V
	VID_VDD Max	9	1.250 V	1.250 V	1.250 V	1.250 V
	IDD Max	3,10	97.0 A	84.7 A	97.5 A	85.6 A
S0.C0.P2	CPU COF	6	1800 MHz		1900 MHz	
	TDP	3,7	112.6 W	104.0 W	112.6 W	104.5 W
	VID_VDD Min	9	1.200 V	1.150 V	1.200 V	1.150 V
	VID_VDD Max	9	1.250 V	1.175 V	1.250 V	1.175 V
	IDD Max	3,10	88.5 A	69.6 A	89.0 A	70.6 A
S0.C0.P3	CPU COF	6	1500 MHz		1600 MHz	
	TDP	3,7	101.3 W	85.6 W	101.7 W	86.1 W
	VID_VDD Min	9	1.200 V	1.125 V	1.200 V	1.100 V
	VID_VDD Max	9	1.250 V	1.125 V	1.250 V	1.125 V
	IDD Max	3,10	80.0 A	54.7 A	80.4 A	57.1 A
S0.C0.P4	CPU COF	6	1200 MHz		1250 MHz	
	TDP	3,7	91.0 W	70.1 W	89.8 W	69.4 W
	VID_VDD Min	9	1.200 V	1.050 V	1.200 V	1.050 V
	VID_VDD Max	9	1.250 V	1.050 V	1.250 V	1.050 V
	IDD Max	3,10	71.5 A	43.9 A	70.5 A	43.9 A
S0.C1.Pmin	IDD Max	3,10,14	26.1 A	6.4 A	24.5 A	5.8 A
S0	I/O Power	13	7.2 W	7.2 W	7.2 W	7.2 W
S3	I/O Power	13	350 mW	350 mW	350 mW	350 mW

The notes for this table are on page 80.

2.3.14 OS mmmm WB pnc GH (115 W Server, AM2r2) Thermal and Power Specifications

OPN			OS1352WBJ4BGH		OS1354WBJ4BGH	
State	Specification[8]	Notes	Single-Plane	Dual-Plane	Single-Plane	Dual-Plane
S0.C0.Px	Tcase Max	1	55 °C to 76 °C		55 °C to 76 °C	
	Tctl Max	2	70 °C		70 °C	
	Tambient Min		5 °C		5 °C	
	Thermal Profile		D		D	
	Startup P-State	5	S0.C0.P4		S0.C0.P4	
	HTC P-State	4	S0.C0.P4		S0.C0.P4	
S0.Cx.Px	NB COF	6,15	1600 MHz	1800 MHz	1600 MHz	1800 MHz
	VID_VDDNB	11,15	N/A	1.250 V	N/A	1.250 V
	IDDNB Max	12	N/A	14.0 A	N/A	13.4 A
S0.C0.P0	CPU COF	6	2100 MHz		2200 MHz	
	TDP	3,7	114.1 W	115.0 W	114.1 W	115.0 W
	VID_VDD Min	9	1.150 V	1.150 V	1.150 V	1.150 V
	VID_VDD Max	9	1.250 V	1.250 V	1.250 V	1.250 V
	IDD Max	3,10	89.8 A	79.5 A	89.8 A	80.0 A
S0.C0.P1	CPU COF	6	1800 MHz		2000 MHz	
	TDP	3,7	102.8 W	104.8 W	106.6 W	107.9 W
	VID_VDD Min	9	1.150 V	1.150 V	1.150 V	1.150 V
	VID_VDD Max	9	1.250 V	1.250 V	1.250 V	1.250 V
	IDD Max	3,10	81.4 A	71.0 A	84.5 A	74.3 A
S0.C0.P2	CPU COF	6	1600 MHz		1700 MHz	
	TDP	3,7	95.3 W	88.4 W	95.3 W	88.3 W
	VID_VDD Min	9	1.150 V	1.100 V	1.150 V	1.100 V
	VID_VDD Max	9	1.250 V	1.200 V	1.250 V	1.175 V
	IDD Max	3,10	76.1 A	59.8 A	76.5 A	60.5 A
S0.C0.P3	CPU COF	6	1300 MHz		1400 MHz	
	TDP	3,7	85.0 W	75.2 W	84.9 W	75.5 W
	VID_VDD Min	9	1.150 V	1.075 V	1.150 V	1.075 V
	VID_VDD Max	9	1.250 V	1.125 V	1.250 V	1.125 V
	IDD Max	3,10	68.1 A	49.5 A	68.5 A	50.5 A
S0.C0.P4	CPU COF	6	1050 MHz		1100 MHz	
	TDP	3,7	76.5 W	65.3 W	74.7 W	64.4 W
	VID_VDD Min	9	1.150 V	1.050 V	1.150 V	1.050 V
	VID_VDD Max	9	1.250 V	1.050 V	1.250 V	1.050 V
	IDD Max	3,10	61.5 A	41.2 A	60.6 A	41.1 A
S0.C1.Pmin	IDD Max	3,10,14	39.7 A	17.4 A	37.0 A	29.4 A
S0	I/O Power	13	7.2 W	7.2 W	7.2 W	7.2 W
S3	I/O Power	13	350 mW	350 mW	350 mW	350 mW

The notes for this table are on page 80.

OPN			OS1356WBJ4BGH	
State	**Specification[8]**	**Notes**	**Single-Plane**	**Dual-Plane**
S0.C0.Px	Tcase Max	1	55 °C to 76 °C	
	Tctl Max	2	70 °C	
	Tambient Min		5 °C	
	Thermal Profile		D	
	Startup P-State	5	S0.C0.P4	
	HTC P-State	4	S0.C0.P4	
S0.Cx.Px	NB COF	6,15	1600 MHz	2000 MHz
	VID_VDDNB	11,15	N/A	1.250 V
	IDDNB Max	12	N/A	13.3 A
S0.C0.P0	CPU COF	6	2300 MHz	
	TDP	3,7	113.2 W	115.0 W
	VID_VDD Min	9	1.150 V	1.150 V
	VID_VDD Max	9	1.250 V	1.250 V
	IDD Max	3,10	89.7 A	80.0 A
S0.C0.P1	CPU COF	6	2000 MHz	
	TDP	3,7	101.9 W	104.4 W
	VID_VDD Min	9	1.150 V	1.150 V
	VID_VDD Max	9	1.250 V	1.250 V
	IDD Max	3,10	81.7 A	72.0 A
S0.C0.P2	CPU COF	6	1700 MHz	
	TDP	3,7	90.9 W	85.5 W
	VID_VDD Min	9	1.150 V	1.100 V
	VID_VDD Max	9	1.250 V	1.175 V
	IDD Max	3,10	73.7 A	58.5 A
S0.C0.P3	CPU COF	6	1400 MHz	
	TDP	3,7	80.7 W	73.5 W
	VID_VDD Min	9	1.150 V	1.075 V
	VID_VDD Max	9	1.250 V	1.100 V
	IDD Max	3,10	65.7 A	48.7 A
S0.C0.P4	CPU COF	6	1150 MHz	
	TDP	3,7	72.4 W	63.8 W
	VID_VDD Min	9	1.150 V	1.050 V
	VID_VDD Max	9	1.250 V	1.050 V
	IDD Max	3,10	59.0 A	40.7 A
S0.C1.Pmin	IDD Max	3,10,14	34.2 A	14.2 A
S0	I/O Power	13	7.2 W	7.2 W
S3	I/O Power	13	350 mW	350 mW

The notes for this table are on page 80.

2.3.15 OE mmmm FM pnc GH (79 W Embedded Server, Fr2 (1207)) Thermal and Power Specifications

OPN			OE23GFFML4BGH[16]		OE13HFFML4BGH[16] OE23HFFML4BGH OE83HFFML4BGH	
State	Specification[8]	Notes	Single-Plane	Dual-Plane	Single-Plane	Dual-Plane
S0.C0.Px	Tcase Max	1	61 °C to 86 °C		61 °C to 86 °C	
	Tctl Max	2	70 °C		70 °C	
	Tambient Min		5 °C		5 °C	
	Thermal Profile		F		F	
	Startup P-State	5	S0.C0.P4		S0.C0.P4	
	HTC P-State	4	S0.C0.P4		S0.C0.P4	
S0.Cx.Px	NB COF	6,15	1400 MHz	1600 MHz	1400 MHz	1600 MHz
	VID_VDDNB	11,15	N/A	1.125 V	N/A	1.125 V
	IDDNB Max	12	N/A	11.9 A	N/A	11.4 A
S0.C0.P0	CPU COF	6	1700 MHz		1800 MHz	
	TDP	3,7	78.3 W	79.0 W	78.3 W	79.0 W
	VID_VDD Min	9	1.075 V	1.075 V	1.075 V	1.075 V
	VID_VDD Max	9	1.125 V	1.125 V	1.125 V	1.125 V
	IDD Max	3,10	66.3 A	56.2 A	66.4 A	56.7 A
S0.C0.P1	CPU COF	6	1600 MHz		1600 MHz	
	TDP	3,7	75.8 W	76.8 W	73.4 W	74.6 W
	VID_VDD Min	9	1.075 V	1.075 V	1.075 V	1.075 V
	VID_VDD Max	9	1.125 V	1.125 V	1.125 V	1.125 V
	IDD Max	3,10	64.3 A	54.2 A	62.4 A	52.6 A
S0.C0.P2	CPU COF	6	1400 MHz		1400 MHz	
	TDP	3,7	70.9 W	68.4 W	68.5 W	66.4 W
	VID_VDD Min	9	1.075 V	1.050 V	1.075 V	1.050 V
	VID_VDD Max	9	1.125 V	1.100 V	1.125 V	1.075 V
	IDD Max	3,10	60.2 A	47.5 A	58.3 A	46.1 A
S0.C0.P3	CPU COF	6	1200 MHz		1200 MHz	
	TDP	3,7	66.0 W	60.8 W	63.6 W	59.0 W
	VID_VDD Min	9	1.075 V	1.025 V	1.075 V	1.025 V
	VID_VDD Max	9	1.125 V	1.050 V	1.125 V	1.050 V
	IDD Max	3,10	56.1 A	41.2 A	54.2 A	39.9 A
S0.C0.P4	CPU COF	6	1000 MHz		1000 MHz	
	TDP	3,7	61.2 W	53.9 W	59.1 W	52.2 W
	VID_VDD Min	9	1.075 V	1.000 V	1.075 V	1.000 V
	VID_VDD Max	9	1.125 V	1.000 V	1.125 V	1.000 V
	IDD Max	3,10	52.1 A	35.3 A	50.1 A	34.1 A
S0.C1.Pmin	IDD Max	3,10,14	21.3 A	7.1 A	20.0 A	6.5 A
S0	I/O Power	13	7.2 W	7.2 W	7.2 W	7.2 W
S3	I/O Power	13	350 mW	350 mW	350 mW	350 mW

The notes for this table are on page 80.

2.3.16 OS mmmm WA pnc GI (115 W Server, Fr2 (1207)) Thermal and Power Specifications

OPN			OS2384WAL4DGI OS8384WAL4DGI		OS2382WAL4DGI OS8382WAL4DGI	
State	**Specification[8]**	**Notes**	**Single-Plane**	**Dual-Plane**	**Single-Plane**	**Dual-Plane**
S0.C0.Px	Tcase Max	1	55 °C to 77 °C		55 °C to 77 °C	
	Tctl Max	2	70 °C		70 °C	
	Tambient Min		5 °C		5 °C	
	Thermal Profile		G		G	
	Startup P-State	5	S0.C0.P3		S0.C0.P3	
	HTC P-State	4	S0.C0.P3		S0.C0.P3	
S0.Cx.Px	NB COF	6,15	1600 MHz	2200 MHz	1600 MHz	2200 MHz
	VID_VDDNB Min	11,15	N/A	1.150 V	N/A	1.150 V
	VID_VDDNB Max	11,15	N/A	1.300 V	N/A	1.300 V
	IDDNB Max	12	N/A	20.0 A	N/A	20.0 A
S0.C0.P0	CPU COF	6	2700 MHz		2600 MHz	
	TDP	3,7	115.0 W	115.0 W	115.0 W	115.0 W
	VID_VDD Min	9	1.150 V	1.150 V	1.150 V	1.150 V
	VID_VDD Max	9	1.325 V	1.325 V	1.325 V	1.325 V
	IDD Max	3,10	90.0 A	72.7 A	90.0 A	72.2 A
S0.C0.P1	CPU COF	6	2000 MHz		1900 MHz	
	TDP	3,7	100.4 W	84.8 W	100.4 W	84.7 W
	VID_VDD Min	9	1.150 V	1.050 V	1.150 V	1.050 V
	VID_VDD Max	9	1.225 V	1.225 V	1.225 V	1.225 V
	IDD Max	3,10	79.9 A	50.1 A	79.9 A	49.6 A
S0.C0.P2	CPU COF	6	1500 MHz		1400 MHz	
	TDP	3,7	92.1 W	66.1 W	92.1 W	65.8 W
	VID_VDD Min	9	1.150 V	0.950 V	1.150 V	0.950 V
	VID_VDD Max	9	1.150 V	1.125 V	1.150 V	1.125 V
	IDD Max	3,10	72.7 A	35.1 A	72.7 A	34.5 A
S0.C0.P3	CPU COF	6	800 MHz		800 MHz	
	TDP	3,7	80.5 W	51.1 W	82.2 W	53.1 W
	VID_VDD Min	9	1.150 V	0.850 V	1.150 V	0.875 V
	VID_VDD Max	9	1.150 V	1.025 V	1.150 V	1.050 V
	IDD Max	3,10	62.6 A	21.4 A	64.1 A	23.2 A
S0.C1.Pmin	IDD Max (Pre-Flush)	3,10,17	33.7 A	6.4 A	34.0 A	7.0 A
	IDD Max (Post-Flush)	3,10,17	31.1 A	4.6 A	31.5 A	5.2 A
S0	I/O Power	13	8.5 W	8.5 W	8.5 W	8.5 W
S3	I/O Power	13	350 mW	350 mW	350 mW	350 mW

The notes for this table are on page 80

OPN			OS2380WAL4DGI OS8380WAL4DGI		OS2378WAL4DGI OS8378WAL4DGI	
State	**Specification[8]**	**Notes**	**Single-Plane**	**Dual-Plane**	**Single-Plane**	**Dual-Plane**
S0.C0.Px	Tcase Max	1	55 °C to 77 °C		55 °C to 77 °C	
	Tctl Max	2	70 °C		70 °C	
	Tambient Min		5 °C		5 °C	
	Thermal Profile		G		G	
	Startup P-State	5	S0.C0.P3		S0.C0.P3	
	HTC P-State	4	S0.C0.P3		S0.C0.P3	
S0.Cx.Px	NB COF	6,15	1600 MHz	2000 MHz	1600 MHz	2000 MHz
	VID_VDDNB Min	11,15	N/A	1.150 V	N/A	1.150 V
	VID_VDDNB Max	11,15	N/A	1.300 V	N/A	1.300 V
	IDDNB Max	12	N/A	20.0 A	N/A	20.0 A
S0.C0.P0	CPU COF	6	2500 MHz		2400 MHz	
	TDP	3,7	115.0 W	115.0 W	115.0 W	115.0 W
	VID_VDD Min	9	1.150 V	1.150 V	1.150 V	1.150 V
	VID_VDD Max	9	1.325 V	1.325 V	1.325 V	1.325 V
	IDD Max	3,10	90.0 A	71.8 A	90.0 A	71.4 A
S0.C0.P1	CPU COF	6	1800 MHz		1700 MHz	
	TDP	3,7	100.4 W	84.4 W	100.4 W	83.8 W
	VID_VDD Min	9	1.150 V	1.050 V	1.150 V	1.050 V
	VID_VDD Max	9	1.225 V	1.225 V	1.225 V	1.225 V
	IDD Max	3,10	79.9 A	49.0 A	79.9 A	48.5 A
S0.C0.P2	CPU COF	6	1300 MHz		1200 MHz	
	TDP	3,7	92.1 W	65.5 W	92.1 W	64.6 W
	VID_VDD Min	9	1.150 V	0.950 V	1.150 V	0.950 V
	VID_VDD Max	9	1.150 V	1.125 V	1.150 V	1.125 V
	IDD Max	3,10	72.7 A	33.9 A	72.7 A	33.3 A
S0.C0.P3	CPU COF	6	800 MHz		800 MHz	
	TDP	3,7	83.8 W	53.9 W	85.5 W	57.6 W
	VID_VDD Min	9	1.150 V	0.875 V	1.150 V	0.900 V
	VID_VDD Max	9	1.150 V	1.050 V	1.150 V	1.075 V
	IDD Max	3,10	65.5 A	23.7 A	67.0 A	25.6 A
S0.C1.Pmin	IDD Max (Pre-Flush)	3,10,17	34.4 A	7.2 A	35.2 A	8.2 A
	IDD Max (Post-Flush)	3,10,17	31.8 A	5.4 A	32.7 A	6.1 A
S0	I/O Power	13	8.5 W	8.5 W	8.5 W	8.5 W
S3	I/O Power	13	350 mW	350 mW	350 mW	350 mW

The notes for this table are on page 80.

OPN			OS2376WAL4DGI	
State	**Specification[8]**	**Notes**	**Single-Plane**	**Dual-Plane**
S0.C0.Px	Tcase Max	1	55 °C to 77 °C	
	Tctl Max	2	70 °C	
	Tambient Min		5 °C	
	Thermal Profile		G	
	Startup P-State	5	S0.C0.P3	
	HTC P-State	4	S0.C0.P3	
S0.Cx.Px	NB COF	6,15	1600 MHz	2000 MHz
	VID_VDDNB Min	11,15	N/A	1.150 V
	VID_VDDNB Max	11,15	N/A	1.300 V
	IDDNB Max	12	N/A	20.0 A
S0.C0.P0	CPU COF	6	2300 MHz	
	TDP	3,7	115.0 W	115.0 W
	VID_VDD Min	9	1.150 V	1.150 V
	VID_VDD Max	9	1.325 V	1.325 V
	IDD Max	3,10	90.0 A	71.0 A
S0.C0.P1	CPU COF	6	1600 MHz	
	TDP	3,7	99.7 W	83.5 W
	VID_VDD Min	9	1.150 V	1.075 V
	VID_VDD Max	9	1.250 V	1.250 V
	IDD Max	3,10	79.3 A	47.9 A
S0.C0.P2	CPU COF	6	1100 MHz	
	TDP	3,7	91.4 W	64.2 W
	VID_VDD Min	9	1.150 V	1.000 V
	VID_VDD Max	9	1.175 V	1.175 V
	IDD Max	3,10	72.1 A	32.7 A
S0.C0.P3	CPU COF	6	800 MHz	
	TDP	3,7	86.4 W	58.4 W
	VID_VDD Min	9	1.150 V	0.900 V
	VID_VDD Max	9	1.150 V	1.075 V
	IDD Max	3,10	67.8 A	27.5 A
S0.C1.Pmin	IDD Max (Pre-Flush)	3,10,17	35.7 A	8.9 A
	IDD Max (Post-Flush)	3,10,17	33.1 A	6.8 A
S0	I/O Power	13	8.5 W	8.5 W
S3	I/O Power	13	350 mW	350 mW

The notes for this table are on page 80.

2.3.17 OS mmmm PA pnc GI (79 W Server, Fr2 (1207)) Thermal and Power Specifications

OPN			OS2372PAL4DGI		OS2374PAL4DGI OS8374PAL4DGI	
State	Specification[8]	Notes	Single-Plane	Dual-Plane	Single-Plane	Dual-Plane
S0.C0.Px	Tcase Max	1	55 °C to 76 °C		55 °C to 76 °C	
	Tctl Max	2	70 °C		70 °C	
	Tambient Min		5 °C		5 °C	
	Thermal Profile		H		H	
	Startup P-State	5	S0.C0.P3		S0.C0.P3	
	HTC P-State	4	S0.C0.P3		S0.C0.P3	
S0.Cx.Px	NB COF	6,15	1600 MHz	2000 MHz	1600 MHz	2000 MHz
	VID_VDDNB Min	11,15	N/A	1.150 V	N/A	1.150 V
	VID_VDDNB Max	11,15	N/A	1.200 V	N/A	1.200 V
	IDDNB Max	12	N/A	13.4 A	N/A	12.9 A
S0.C0.P0	CPU COF	6	2100 MHz		2200 MHz	
	TDP	3,7	79.0 W	79.0 W	79.0 W	79.0 W
	VID_VDD Min	9	1.150 V	1.150 V	1.150 V	1.150 V
	VID_VDD Max	9	1.325 V	1.325 V	1.325 V	1.325 V
	IDD Max	3,10	60.3 A	48.8 A	60.0 A	49.1 A
S0.C0.P1	CPU COF	6	1600 MHz		1700 MHz	
	TDP	3,7	69.6 W	61.8 W	69.2 W	61.9 W
	VID_VDD Min	9	1.150 V	1.075 V	1.150 V	1.075 V
	VID_VDD Max	9	1.250 V	1.250 V	1.250 V	1.250 V
	IDD Max	3,10	53.1 A	35.9 A	52.8 A	36.2 A
S0.C0.P2	CPU COF	6	1300 MHz		1400 MHz	
	TDP	3,7	64.6 W	51.1 W	64.2 W	51.2 W
	VID_VDD Min	9	1.150 V	1.000 V	1.150 V	1.000 V
	VID_VDD Max	9	1.175 V	1.175 V	1.175 V	1.175 V
	IDD Max	3,10	48.8 A	27.5 A	48.5 A	27.9 A
S0.C0.P3	CPU COF	6	800 MHz		800 MHz	
	TDP	3,7	56.3 W	40.9 W	54.3 W	39.9 W
	VID_VDD Min	9	1.150 V	0.925 V	1.150 V	0.925 V
	VID_VDD Max	9	1.150 V	1.100 V	1.150 V	1.100 V
	IDD Max	3,10	41.6 A	18.4 A	39.8 A	17.7 A
S0.C1.Pmin	IDD Max (Pre-Flush)	3,10,17	21.0 A	5.3 A	20.2 A	5.1 A
	IDD Max (Post-Flush)	3,10,17	18.4 A	3.3 A	17.6 A	3.0 A
S0	I/O Power	13	8.5 W	8.5 W	8.5 W	8.5 W
S3	I/O Power	13	350 mW	350 mW	350 mW	350 mW

The notes for this table are on page 80.

OPN			OS2376PAL4DGI OS8376PAL4DGI	
State	**Specification[8]**	**Notes**	**Single-Plane**	**Dual-Plane**
S0.C0.Px	Tcase Max	1	55 °C to 76 °C	
	Tctl Max	2	70 °C	
	Tambient Min		5 °C	
	Thermal Profile		H	
	Startup P-State	5	S0.C0.P3	
	HTC P-State	4	S0.C0.P3	
S0.Cx.Px	NB COF	6,15	1600 MHz	2000 MHz
	VID_VDDNB Min	11,15	N/A	1.150 V
	VID_VDDNB Max	11,15	N/A	1.200 V
	IDDNB Max	12	N/A	12.5 A
S0.C0.P0	CPU COF	6	2300 MHz	
	TDP	3,7	79.0 W	79.0 W
	VID_VDD Min	9	1.150 V	1.150 V
	VID_VDD Max	9	1.325 V	1.325 V
	IDD Max	3,10	60.3 A	49.7 A
S0.C0.P1	CPU COF	6	1800 MHz	
	TDP	3,7	69.6 W	62.0 W
	VID_VDD Min	9	1.150 V	1.075 V
	VID_VDD Max	9	1.250 V	1.250 V
	IDD Max	3,10	53.1 A	36.9 A
S0.C0.P2	CPU COF	6	1500 MHz	
	TDP	3,7	64.6 W	51.2 W
	VID_VDD Min	9	1.150 V	1.000 V
	VID_VDD Max	9	1.175 V	1.175 V
	IDD Max	3,10	48.8 A	28.6 A
S0.C0.P3	CPU COF	6	800 MHz	
	TDP	3,7	53.0 W	37.7 W
	VID_VDD Min	9	1.150 V	0.900 V
	VID_VDD Max	9	1.150 V	1.075 V
	IDD Max	3,10	38.7 A	16.4 A
S0.C1.Pmin	IDD Max (Pre-Flush)	3,10,17	19.4 A	4.6 A
	IDD Max (Post-Flush)	3,10,17	16.7 A	2.6 A
S0	I/O Power	13	8.5 W	8.5 W
S3	I/O Power	13	350 mW	350 mW

The notes for this table are on page 80.

2.3.18 OS mmmm YA pnc GI (137 W Server, Fr2 (1207)) Thermal and Power Specifications

OPN			OS2386YAL4DGI OS8386YAL4DGI	
State	**Specification[8]**	**Notes**	**Single-Plane**	**Dual-Plane**
S0.C0.Px	Tcase Max	1	55 °C to 73 °C	
	Tctl Max	2	70 °C	
	Tambient Min		5 °C	
	Thermal Profile		I	
	Startup P-State	5	S0.C0.P3	
	HTC P-State	4	S0.C0.P3	
S0.Cx.Px	NB COF	6,15	1600 MHz	2200 MHz
	VID_VDDNB Min	11,15	N/A	1.150 V
	VID_VDDNB Max	11,15	N/A	1.300 V
	IDDNB Max	12	N/A	20.0 A
S0.C0.P0	CPU COF	6	2800 MHz	
	TDP	3,7	137 W	137 W
	VID_VDD Min	9	1.225 V	1.225 V
	VID_VDD Max	9	1.325 V	1.325 V
	IDD Max	3,10	102.8 A	82.9 A
S0.C0.P1	CPU COF	6	2100 MHz	
	TDP	3,7	96.4 W	99.5 W
	VID_VDD Min	9	1.150 V	1.125 V
	VID_VDD Max	9	1.225 V	1.225 V
	IDD Max	3,10	76.4 A	57.4 A
S0.C0.P2	CPU COF	6	1600 MHz	
	TDP	3,7	88.1 W	76.0 W
	VID_VDD Min	9	1.150 V	1.025 V
	VID_VDD Max	9	1.150 V	1.125 V
	IDD Max	3,10	69.2 A	40.4 A
S0.C0.P3	CPU COF	6	800 MHz	
	TDP	3,7	74.9 W	56.0 W
	VID_VDD Min	9	1.150 V	0.925 V
	VID_VDD Max	9	1.150 V	1.025 V
	IDD Max	3,10	57.7 A	24.0 A
S0.C1.Pmin	IDD Max (Pre-Flush)	3,10,17	36.2 A	7.5 A
	IDD Max (Post-Flush)	3,10,17	33.6 A	5.5 A
S0	I/O Power	13	8.5 W	8.5 W
S3	I/O Power	13	350 mW	350 mW

The notes for this table are on page 80.

2.3.19 OS mmmm WH pnc GI (115 W Server, Fr5 (1207)) Thermal and Power Specifications

OPN			OS2387WHP4DGI OS8387WHP4DGI		OS2389WHP4DGI OS8389WHP4DGI	
State	**Specification[8]**	**Notes**	**Single-Plane**	**Dual-Plane**	**Single-Plane**	**Dual-Plane**
S0.C0.Px	Tcase Max	1	55 °C to 77 °C		55 °C to 77 °C	
	Tctl Max	2	70 °C		70 °C	
	Tambient Min		5 °C		5 °C	
	Thermal Profile		G		G	
	Startup P-State	5	S0.C0.P3		S0.C0.P3	
	HTC P-State	4	S0.C0.P3		S0.C0.P3	
S0.Cx.Px	NB COF	6,15	1600 MHz	2200 MHz	1600 MHz	2200 MHz
	VID_VDDNB Min	11,15	N/A	1.150 V	N/A	1.150 V
	VID_VDDNB Max	11,15	N/A	1.200 V	N/A	1.200 V
	IDDNB Max	12	N/A	20.0 A	N/A	20.0 A
S0.C0.P0	CPU COF	6	2800 MHz		2900 MHz	
	TDP	3,7	115.0 W	115.0 W	115.0 W	115.0 W
	VID_VDD Min	9	1.150 V	1.150 V	1.150 V	1.150 V
	VID_VDD Max	9	1.325 V	1.325 V	1.325 V	1.325 V
	IDD Max	3,10	90.0 A	73.1 A	90.0 A	73.5 A
S0.C0.P1	CPU COF	6	2100 MHz		2300 MHz	
	TDP	3,7	100.4 W	84.5 W	102.1 W	86.2 W
	VID_VDD Min	9	1.150 V	1.050 V	1.150 V	1.050 V
	VID_VDD Max	9	1.225 V	1.225 V	1.225 V	1.225 V
	IDD Max	3,10	79.9 A	50.7 A	81.4 A	52.5 A
S0.C0.P2	CPU COF	6	1600 MHz		1700 MHz	
	TDP	3,7	92.1 W	65.3 W	92.1 W	66.0 W
	VID_VDD Min	9	1.150 V	0.950 V	1.150 V	0.950 V
	VID_VDD Max	9	1.150 V	1.125 V	1.150 V	1.125 V
	IDD Max	3,10	72.7 A	35.7 A	72.7 A	36.3 A
S0.C0.P3	CPU COF	6	800 MHz		800 MHz	
	TDP	3,7	78.9 W	49.4 W	77.2 W	48.1 W
	VID_VDD Min	9	1.150 V	0.850 V	1.150 V	0.825 V
	VID_VDD Max	9	1.150 V	1.025 V	1.150 V	1.000 V
	IDD Max	3,10	61.2 A	21.0 A	59.8 A	19.6 A
S0.C1.Pmin	IDD Max (Pre-Flush)	3,10,17	33.2 A	6.2 A	32.4 A	5.6 A
	IDD Max (Post-Flush)	3,10,17	30.6 A	4.5 A	29.8 A	3.9 A
S0	I/O Power	13	8.5 W	8.5 W	8.5 W	8.5 W
S3	I/O Power	13	350 mW	350 mW	350 mW	350 mW

The notes for this table are on page 80.

2.3.20 OS mmmm PC pnc GI (79 W Server, Fr5 (1207)) Thermal and Power Specifications

OPN			OS2379PCP4DGI OS8379PCP4DGI		OS2381PCP4DGI OS8381PCP4DGI	
State	**Specification[8]**	**Notes**	**Single-Plane**	**Dual-Plane**	**Single-Plane**	**Dual-Plane**
S0.C0.Px	Tcase Max	1	55 °C to 76 °C		55 °C to 76 °C	
	Tctl Max	2	70 °C		70 °C	
	Tambient Min		5 °C		5 °C	
	Thermal Profile		H		H	
	Startup P-State	5	S0.C0.P3		S0.C0.P3	
	HTC P-State	4	S0.C0.P3		S0.C0.P3	
S0.Cx.Px	NB COF	6,15	1600 MHz	2000 MHz	1600 MHz	2000 MHz
	VID_VDDNB Min	11,15	N/A	1.100 V	N/A	1.100 V
	VID_VDDNB Max	11,15	N/A	1.150 V	N/A	1.150 V
	IDDNB Max	12	N/A	11.2 A	N/A	10.8 A
S0.C0.P0	CPU COF	6	2400 MHz		2500 MHz	
	TDP	3,7	79.0 W	79.0 W	79.0 W	79.0 W
	VID_VDD Min	9	1.150 V	1.150 V	1.150 V	1.150 V
	VID_VDD Max	9	1.325 V	1.325 V	1.325 V	1.325 V
	IDD Max	3,10	61.3 A	50.8 A	61.3 A	51.2 A
S0.C0.P1	CPU COF	6	1900 MHz		2100 MHz	
	TDP	3,7	70.7 W	61.6 W	72.4 W	63.1 W
	VID_VDD Min	9	1.150 V	1.075 V	1.150 V	1.075 V
	VID_VDD Max	9	1.250 V	1.250 V	1.250 V	1.250 V
	IDD Max	3,10	54.1 A	37.9 A	55.5 A	39.8 A
S0.C0.P2	CPU COF	6	1500 MHz		1700 MHz	
	TDP	3,7	64.1 W	49.4 W	65.7 W	50.6 W
	VID_VDD Min	9	1.150 V	1.000 V	1.150 V	1.000 V
	VID_VDD Max	9	1.175 V	1.175 V	1.175 V	1.175 V
	IDD Max	3,10	48.3 A	28.4 A	49.8 A	30.2 A
S0.C0.P3	CPU COF	6	800 MHz		800 MHz	
	TDP	3,7	52.5 W	34.6 W	50.8 W	32.7 W
	VID_VDD Min	9	1.150 V	0.875 V	1.150 V	0.850 V
	VID_VDD Max	9	1.150 V	1.050 V	1.150 V	1.025 V
	IDD Max	3,10	38.3 A	20.4 A	36.8 A	18.8 A
S0.C1.Pmin	IDD Max (Pre-Flush)	3,10,17	18.4 A	4.2 A	17.6 A	3.8 A
	IDD Max (Post-Flush)	3,10,17	15.8 A	2.3 A	15.0 A	2.0 A
S0	I/O Power	13	8.5 W	8.5 W	8.5 W	8.5 W
S3	I/O Power	13	350 mW	350 mW	350 mW	350 mW

The notes for this table are on page 80.

2.3.21 OS mmmm YC pnc GI (137 W Server, Fr5 (1207)) Thermal and Power Specifications

OPN			OS2393YCP4DGI OS8393YCP4DGI	
State	Specification[8]	Notes	Single-Plane	Dual-Plane
S0.C0.Px	Tcase Max	1	55 °C to 73 °C	
	Tctl Max	2	70 °C	
	Tambient Min		5 °C	
	Thermal Profile		I	
	Startup P-State	5	S0.C0.P3	
	HTC P-State	4	S0.C0.P3	
S0.Cx.Px	NB COF	6,15	1600 MHz	2200 MHz
	VID_VDDNB Min	11,15	N/A	1.150 V
	VID_VDDNB Max	11,15	N/A	1.200 V
	IDDNB Max	12	N/A	19.6 A
S0.C0.P0	CPU COF	6	3100 MHz	
	TDP	3,7	137.0 W	137.0 W
	VID_VDD Min	9	1.225 V	1.225 V
	VID_VDD Max	9	1.325 V	1.325 V
	IDD Max	3,10	104.9 A	85.5 A
S0.C0.P1	CPU COF	6	2400 MHz	
	TDP	3,7	99.4 W	99.7 W
	VID_VDD Min	9	1.150 V	1.125 V
	VID_VDD Max	9	1.225 V	1.225 V
	IDD Max	3,10	79.0 A	60.2 A
S0.C0.P2	CPU COF	6	1900 MHz	
	TDP	3,7	91.1 W	76.2 W
	VID_VDD Min	9	1.150 V	1.025 V
	VID_VDD Max	9	1.150 V	1.125 V
	IDD Max	3,10	71.8 A	43.1 A
S0.C0.P3	CPU COF	6	800 MHz	
	TDP	3,7	72.9 W	48.6 W
	VID_VDD Min	9	1.150 V	0.850 V
	VID_VDD Max	9	1.150 V	0.950 V
	IDD Max	3,10	56.0 A	19.6 A
S0.C1.Pmin	IDD Max (Pre-Flush)	3,10,17	36.2 A	7.5 A
	IDD Max (Post-Flush)	3,10,17	33.6 A	5.5 A
S0	I/O Power	13	8.5 W	8.5 W
S3	I/O Power	13	350 mW	350 mW

The notes for this table are on page 80.

2.3.22 OS mmmm WG pnc GI (115 W Server, AM3) Thermal and Power Specifications

OPN			OS1381WGK4DGI		OS1385WGK4DGI	
State	**Specification[8]**	**Notes**	**Single-Plane**	**Dual-Plane**	**Single-Plane**	**Dual-Plane**
S0.C0.Px	Tcase Max	1	55 °C to 77 °C		55 °C to 77 °C	
	Tctl Max	2	70 °C		70 °C	
	Tambient Min		5 °C		5 °C	
	Thermal Profile		G		G	
	Startup P-State	5	S0.C0.P3		S0.C0.P3	
	HTC P-State	4	S0.C0.P3		S0.C0.P3	
S0.Cx.Px	NB COF	6,15	1600 MHz	2200 MHz	1600 MHz	2200 MHz
	VID_VDDNB Min	11,15	N/A	1.150 V	N/A	1.150 V
	VID_VDDNB Max	11,15	N/A	1.200 V	N/A	1.200 V
	IDDNB Max	12	N/A	20.0 A	N/A	20.0 A
S0.C0.P0	CPU COF	6	2500 MHz		2700 MHz	
	TDP	3,7	115 W	115 W	115 W	115 W
	VID_VDD Min	9	1.150 V	1.150 V	1.150V	1.150V
	VID_VDD Max	9	1.325 V	1.325 V	1.325V	1.325V
	IDD Max	3,10	92.2 A	73.4 A	92.7 A	74.4 A
S0.C0.P1	CPU COF	6	1800 MHz		2000 MHz	
	TDP	3,7	76.0 W	83.1 W	76.8 W	83.8 W
	VID_VDD Min	9	1.050 V	1.050 V	1.050V	1.050V
	VID_VDD Max	9	1.225 V	1.225 V	1.225V	1.225V
	IDD Max	3,10	64.2 A	50.1 A	65.2 A	51.4 A
S0.C0.P2	CPU COF	6	1300 MHz		1500 MHz	
	TDP	3,7	66.4 W	63.4 W	68.5 W	64.4 W
	VID_VDD Min	9	1.050V	0.950V	1.050V	0.950V
	VID_VDD Max	9	1.125V	1.125V	1.125V	1.125V
	IDD Max	3,10	56.8 A	34.7 A	58.8 A	36.1 A
S0.C0.P3	CPU COF	6	800 MHz		800 MHz	
	TDP	3,7	59.7 W	51.4 W	59.1 W	48.9 W
	VID_VDD Min	9	1.050V	0.875V	1.050V	0.850V
	VID_VDD Max	9	1.050V	1.050V	1.050V	1.025V
	IDD Max	3,10	50.4 A	24.1 A	49.9 A	22.2 A
S0.C1.Pmin	IDD Max (Pre-Flush)	3,10,17	29.9 A	7.4 A	29.6 A	6.6 A
	IDD Max (Post-Flush)	3,10,17	27.6 A	5.5 A	27.3 A	4.9 A
S0	I/O Power	13	8.5 W	8.5 W	8.5 W	8.5 W
S3	I/O Power	13	350 mW	350 mW	350 mW	350 mW

The notes for this table are on page 80.

OPN			OS1389WGK4DGI	
State	**Specification[8]**	**Notes**	**Single-Plane**	**Dual-Plane**
S0.C0.Px	Tcase Max	1	55 °C to 77 °C	
	Tctl Max	2	70 °C	
	Tambient Min		5 °C	
	Thermal Profile		G	
	Startup P-State	5	S0.C0.P3	
	HTC P-State	4	S0.C0.P3	
S0.Cx.Px	NB COF	6,15	1600 MHz	2200 MHz
	VID_VDDNB Min	11,15	N/A	1.150 V
	VID_VDDNB Max	11,15	N/A	1.200 V
	IDDNB Max	12	N/A	20.0 A
S0.C0.P0	CPU COF	6	2900 MHz	
	TDP	3,7	115 W	115 W
	VID_VDD Min	9	1.150 V	1.150 V
	VID_VDD Max	9	1.325 V	1.325 V
	IDD Max	3,10	92.7 A	75.2 A
S0.C0.P1	CPU COF	6	2300 MHz	
	TDP	3,7	80.0 W	85.5 W
	VID_VDD Min	9	1.050 V	1.050 V
	VID_VDD Max	9	1.225 V	1.225 V
	IDD Max	3,10	67.0 A	53.8 A
S0.C0.P2	CPU COF	6	1700 MHz	
	TDP	3,7	69.0 W	64.7 W
	VID_VDD Min	9	1.050V	0.950V
	VID_VDD Max	9	1.125V	1.125V
	IDD Max	3,10	59.3 A	37.2 A
S0.C0.P3	CPU COF	6	800 MHz	
	TDP	3,7	57.0 W	46.3 W
	VID_VDD Min	9	1.050V	0.825V
	VID_VDD Max	9	1.050V	1.000V
	IDD Max	3,10	47.9 A	20.3 A
S0.C1.Pmin	IDD Max (Pre-Flush)	3,10,17	28.6 A	5.8 A
	IDD Max (Post-Flush)	3,10,17	26.3 A	4.2 A
S0	I/O Power	13	8.5 W	8.5 W
S3	I/O Power	13	350 mW	350 mW

The notes for this table are on page 80.

2.3.23 OS mmmm NA pnc GI (60 W Server, Fr5 (1207)) Thermal and Power Specifications

OPN			OS2373NAP4DGI OS8373NAP4DGI		OS2377NAP4DGI	
State	Specification[8]	Notes	Single-Plane	Dual-Plane	Single-Plane	Dual-Plane
S0.C0.Px	Tcase Max	1	55 °C to 68 °C		55 °C to 68 °C	
	Tctl Max	2	70 °C		70 °C	
	Tambient Min		5 °C		5 °C	
	Thermal Profile		J		J	
	Startup P-State	5	S0.C0.P4		S0.C0.P4	
	HTC P-State	4	S0.C0.P4		S0.C0.P4	
S0.Cx.Px	NB COF	6,15	1600 MHz	2000 MHz	1600 MHz	2000 MHz
	VID_VDDNB Min	11,15	N/A	1.075 V	N/A	1.075 V
	VID_VDDNB Max	11,15	N/A	1.075 V	N/A	1.075 V
	IDDNB Max	12	N/A	7.7 A	N/A	7.7 A
S0.C0.P0	CPU COF	6	2100 MHz		2300 MHz	
	TDP	3,7	57.2 W	60.0 W	59.6 W	60.0 W
	VID_VDD Min	9	1.075 V	1.050 V	1.075 V	1.050 V
	VID_VDD Max	9	1.100 V	1.100 V	1.100 V	1.100 V
	IDD Max	3,10	44.3 A	37.1 A	46.4 A	39.4 A
S0.C0.P1	CPU COF	6	1900 MHz		2100 MHz	
	TDP	3,7	51.4 W	52.3 W	54.2 W	54.6 W
	VID_VDD Min	9	1.075 V	1.025 V	1.075 V	1.025 V
	VID_VDD Max	9	1.075 V	1.075 V	1.075 V	1.075 V
	IDD Max	3,10	39.9 A	33.0 A	42.5 A	35.3 A
S0.C0.P2	CPU COF	6	1700 MHz		1900 MHz	
	TDP	3,7	48.5 W	47.4 W	51.4 W	49.6 W
	VID_VDD Min	9	1.075 V	1.000 V	1.075 V	1.000 V
	VID_VDD Max	9	1.075 V	1.050 V	1.075 V	1.050 V
	IDD Max	3,10	37.2 A	29.2 A	39.9 A	31.4 A
S0.C0.P3	CPU COF	6	1500 MHz		1700 MHz	
	TDP	3,7	45.7 W	43.0 W	48.5 W	45.0 W
	VID_VDD Min	9	1.075 V	0.975 V	1.075 V	0.975 V
	VID_VDD Max	9	1.075 V	1.025 V	1.075 V	1.025 V
	IDD Max	3,10	34.6 A	25.6 A	37.2 A	27.7 A
S0.C0.P4	CPU COF	6	800 MHz		800 MHz	
	TDP	3,7	35.8 W	28.9 W	35.8 W	28.5 W
	VID_VDD Min	9	1.075 V	0.850 V	1.075 V	0.850 V
	VID_VDD Max	9	1.075 V	0.900 V	1.075 V	0.900 V
	IDD Max	3,10	25.4 A	13.4 A	25.4 A	13.2 A
S0.C1.Pmin	IDD Max (Pre-Flush)	3,10,17	11.9 A	3.5 A	11.9 A	3.4 A
	IDD Max (Post-Flush)	3,10,17	9.4 A	1.5 A	9.4 A	1.4 A
S0	I/O Power	13	8.5 W	8.5 W	8.5 W	8.5 W
S3	I/O Power	13	350 mW	350 mW	350 mW	350 mW

The notes for this table are on page 80.

2.3.24 OS mmmm WJ pnc GN (115 W Server, Fr6 (1207)) Thermal and Power Specifications

State	Specification[8]	Notes	OS2427WJS6DGN	OS2431WJS6DGN OS8431WJS6DGN
S0.C0.Px	Tcase Max	1	55 °C to 76 °C	55 °C to 76 °C
	Tctl Max	2	70 °C	70 °C
	Tambient Min		5 °C	5 °C
	Thermal Profile		K	K
	Startup P-State	5	S0.C0.P4	S0.C0.P4
	HTC P-State	4	S0.C0.P4	S0.C0.P4
S0.Cx.Px	NB COF	6,15	2200 MHz	2200 MHz
	VID_VDDNB Min	15	1.175 V	1.175 V
	VID_VDDNB Max	15	1.200 V	1.200 V
	IDDNB Max	12	20.0 A	20.0 A
S0.C0.P0	CPU COF	6	2200 MHz	2400 MHz
	TDP	3,7	115.0 W	115.0 W
	VID_VDD Min	9	1.025 V	1.025 V
	VID_VDD Max	9	1.300 V	1.300 V
	IDD Max	3,10	78.3 A	79.7 A
S0.C0.P1	CPU COF	6	1700 MHz	1900 MHz
	TDP	3,7	93.0 W	93.8 W
	VID_VDD Min	9	0.975 V	0.975 V
	VID_VDD Max	9	1.250 V	1.250 V
	IDD Max	3,10	60.5 A	62.2 A
S0.C0.P2	CPU COF	6	1300 MHz	1500 MHz
	TDP	3,7	80.5 W	81.8 W
	VID_VDD Min	9	0.950 V	0.950 V
	VID_VDD Max	9	1.225 V	1.225 V
	IDD Max	3,10	49.4 A	51.4 A
S0.C0.P3	CPU COF	6	1000 MHz	1200 MHz
	TDP	3,7	71.1 W	69.4 W
	VID_VDD Min	9	0.925 V	0.900 V
	VID_VDD Max	9	1.200 V	1.175 V
	IDD Max	3,10	41.1 A	40.6 A
S0.C0.P4	CPU COF	6	800 MHz	800 MHz
	TDP	3,7	59.2 W	57.8 W
	VID_VDD Min	9	0.850 V	0.850 V
	VID_VDD Max	9	1.125 V	1.125 V
	IDD Max	3,10	30.9 A	29.5 A
S0.C1.Pmin	IDD Max (Pre-Flush)	3,10,17	10.5 A	10.0 A
	IDD Max (Post-Flush)	3,10,17	8.2 A	7.7 A
S0	I/O Power	13	9.8 W	9.8 W
S3	I/O Power	13	350 mW	350 mW

The notes for this table are on page 80.

State	Specification[8]	Notes	OS2435WJS6DGN OS8435WJS6DGN
S0.C0.Px	Tcase Max	1	55 °C to 76 °C
	Tctl Max	2	70 °C
	Tambient Min		5 °C
	Thermal Profile		K
	Startup P-State	5	S0.C0.P4
	HTC P-State	4	S0.C0.P4
S0.Cx.Px	NB COF	6,15	2200 MHz
	VID_VDDNB Min	15	1.175 V
	VID_VDDNB Max	15	1.200 V
	IDDNB Max	12	17.4 A
S0.C0.P0	CPU COF	6	2600 MHz
	TDP	3,7	115.0 W
	VID_VDD Min	9	1.075 V
	VID_VDD Max	9	1.300 V
	IDD Max	3,10	80.0 A
S0.C0.P1	CPU COF	6	2100 MHz
	TDP	3,7	93.2 W
	VID_VDD Min	9	1.025 V
	VID_VDD Max	9	1.250 V
	IDD Max	3,10	62.8 A
S0.C0.P2	CPU COF	6	1700 MHz
	TDP	3,7	80.8 W
	VID_VDD Min	9	1.000 V
	VID_VDD Max	9	1.225 V
	IDD Max	3,10	52.0 A
S0.C0.P3	CPU COF	6	1400 MHz
	TDP	3,7	71.5 W
	VID_VDD Min	9	0.975 V
	VID_VDD Max	9	1.200 V
	IDD Max	3,10	43.8 A
S0.C0.P4	CPU COF	6	800 MHz
	TDP	3,7	53.2 W
	VID_VDD Min	9	0.900 V
	VID_VDD Max	9	1.125 V
	IDD Max	3,10	27.1 A
S0.C1.Pmin	IDD Max (Pre-Flush)	3,10,17	8.6 A
	IDD Max (Post-Flush)	3,10,17	6.4 A
S0	I/O Power	13	9.8 W
S3	I/O Power	13	350 mW

The notes for this table are on page 80.

2.3.25 OS mmmm PD pnc GN (79 W Server, Fr6 (1207)) Thermal and Power Specifications

State	Specification[8]	Notes	OS2423PDS6DGN	OS2425PDS6DGN OS8425PDS6DGN
S0.C0.Px	Tcase Max	1	55 °C to 76 °C	55 °C to 76 °C
	Tctl Max	2	70 °C	70 °C
	Tambient Min		5 °C	5 °C
	Thermal Profile		E	E
	Startup P-State	5	S0.C0.P4	S0.C0.P4
	HTC P-State	4	S0.C0.P4	S0.C0.P4
S0.Cx.Px	NB COF	6,15	2200 MHz	2200 MHz
	VID_VDDNB Min	15	1.175 V	1.175 V
	VID_VDDNB Max	15	1.200 V	1.200 V
	IDDNB Max	12	17.5 A	16.7 A
S0.C0.P0	CPU COF	6	2000 MHz	2100 MHz
	TDP	3,7	79.0 W	79.0 W
	VID_VDD Min	9	0.950 V	0.950 V
	VID_VDD Max	9	1.150 V	1.150 V
	IDD Max	3,10	54.6 A	55.3 A
S0.C0.P1	CPU COF	6	1500 MHz	1600 MHz
	TDP	3,7	67.1 W	67.1 W
	VID_VDD Min	9	0.925 V	0.925 V
	VID_VDD Max	9	1.125 V	1.125 V
	IDD Max	3,10	42.4 A	43.3 A
S0.C0.P2	CPU COF	6	1300 MHz	1400 MHz
	TDP	3,7	61.1 W	61.1 W
	VID_VDD Min	9	0.900 V	0.900 V
	VID_VDD Max	9	1.100 V	1.100 V
	IDD Max	3,10	36.7 A	37.6 A
S0.C0.P3	CPU COF	6	1000 MHz	1100 MHz
	TDP	3,7	54.2 W	54.1 W
	VID_VDD Min	9	0.875 V	0.875 V
	VID_VDD Max	9	1.075 V	1.075 V
	IDD Max	3,10	29.7 A	30.6 A
S0.C0.P4	CPU COF	6	800 MHz	800 MHz
	TDP	3,7	49.4 W	48.0 W
	VID_VDD Min	9	0.850 V	0.850 V
	VID_VDD Max	9	1.050 V	1.050 V
	IDD Max	3,10	24.8 A	24.1 A
S0.C1.Pmin	IDD Max (Pre-Flush)	3,10,17	7.8 A	7.5 A
	IDD Max (Post-Flush)	3,10,17	5.7 A	5.4 A
S0	I/O Power	13	9.8 W	9.8 W
S3	I/O Power	13	350 mW	350 mW

The notes for this table are on page 80.

2.3.26 OS mmmm NB pnc GN (60 W Server, Fr6 (1207)) Thermal and Power Specifications

State	Specification[8]	Notes	OS2419NBS6DGN
S0.C0.Px	Tcase Max	1	55 °C to 68 °C
	Tctl Max	2	70 °C
	Tambient Min		5 °C
	Thermal Profile		P
	Startup P-State	5	S0.C0.P4
	HTC P-State	4	S0.C0.P4
S0.Cx.Px	NB COF	6,15	2000 MHz
	VID_VDDNB	15	1.125 V
	IDDNB Max	12	11.2 A
S0.C0.P0	CPU COF	6	1800 MHz
	TDP	3,7	60.0 W
	VID_VDD Min	9	0.900 V
	VID_VDD Max	9	1.125 V
	IDD Max	3,10	42.7 A
S0.C0.P1	CPU COF	6	1400 MHz
	TDP	3,7	51.0 W
	VID_VDD Min	9	0.875 V
	VID_VDD Max	9	1.100 V
	IDD Max	3,10	33.7 A
S0.C0.P2	CPU COF	6	1200 MHz
	TDP	3,7	47.9 W
	VID_VDD Min	9	0.875 V
	VID_VDD Max	9	1.100 V
	IDD Max	3,10	30.3 A
S0.C0.P3	CPU COF	6	1000 MHz
	TDP	3,7	42.9 W
	VID_VDD Min	9	0.850 V
	VID_VDD Max	9	1.075 V
	IDD Max	3,10	25.4 A
S0.C0.P4	CPU COF	6	800 MHz
	TDP	3,7	40.0 W
	VID_VDD Min	9	0.850 V
	VID_VDD Max	9	1.075 V
	IDD Max	3,10	22.1 A
S0.C1.Pmin	IDD Max (Pre-Flush)	3,10,17	6.6 A
	IDD Max (Post-Flush)	3,10,17	4.5 A
S0	I/O Power	13	9.8 W
S3	I/O Power	13	350 mW

The notes for this table are on page 80.

2.3.27 OS mmmm WK pnc GO (115 W Server, G34r1) Thermal and Power Specifications

State	Specification[8]	Notes	OS6168WKTCEGO	OS6172WKTCEGO
S0.C0.Px	Tcase Max	1	55 °C to 69 °C	55 °C to 69 °C
	Tctl Max	2	70 °C	70 °C
	Tambient Min		5 °C	5 °C
	Thermal Profile		Q	Q
	Startup P-State	5	S0.C0.P4	S0.C0.P4
	HTC P-State	4	S0.C0.P4	S0.C0.P4
S0.Cx.Px	NB COF	6,15	1800 MHz	1800 MHz
	VID_VDDNB Min	15	1.0250 V	1.0250 V
	VID_VDDNB Max	15	1.1000 V	1.1000 V
	IDDNB Max	12	19.6 A	18.4 A
S0.C0.P0	CPU COF	6	1900 MHz	2100 MHz
	TDP	3,7	115.0 W	115.0 W
	Max Power	18	135.0 W	135.0 W
	VID_VDD Min	9	1.0000 V	1.0000 V
	VID_VDD Max	9	1.1875 V	1.1875 V
	IDD TDC		93.4 A	96.6 A
S0.C0.P1	CPU COF	6	1500 MHz	1700 MHz
	TDP	3,7	99.4 W	101.2 W
	Max Power	18	113.7 W	114.9 W
	VID_VDD Min	9	0.9500 V	0.9500 V
	VID_VDD Max	9	1.1375 V	1.1375 V
	IDD TDC		75.2 A	78.5 A
S0.C0.P2	CPU COF	6	1300 MHz	1400 MHz
	TDP	3,7	93.7 W	90.4 W
	Max Power	18	102.6 W	100.4 W
	VID_VDD Min	9	0.9250 V	0.9125 V
	VID_VDD Max	9	1.1125 V	1.1125 V
	IDD TDC		66.5 A	66.9 A
S0.C0.P3	CPU COF	6	1000 MHz	1100 MHz
	TDP	3,7	83.5 W	81.8 W
	Max Power	18	90.7 W	89.6 W
	VID_VDD Min	9	0.9000 V	0.9000 V
	VID_VDD Max	9	1.0875 V	1.0875 V
	IDD TDC		55.0 A	55.4 A
S0.C0.P4	CPU COF	6	800 MHz	800 MHz
	TDP	3,7	78.0 W	73.7 W
	Max Power	18	83.8 W	79.7 W
	VID_VDD Min	9	0.8750 V	0.8750 V
	VID_VDD Max	9	1.0625 V	1.0625 V
	IDD TDC		46.8 A	44.3 A
S0.C1.Pmin	IDD Max (Pre-Flush)	3,10,17	22.0 A	18.4 A
	IDD Max (Post-Flush)	3,10,17	16.1 A	12.5 A
S0.C1e.Pmin	TDP	19	15.2 W	12.0 W
	I/O Power		8.7 W	8.7 W
S0	I/O Power	21	23.8 W	23.3 W
S3	I/O Power	20	600 mW	600 mW

The notes for this table are on page 80.

State	Specification[8]	Notes	OS6174WKTCEGO
S0.C0.Px	Tcase Max	1	55 °C to 69 °C
	Tctl Max	2	70 °C
	Tambient Min		5 °C
	Thermal Profile		Q
	Startup P-State	5	S0.C0.P4
	HTC P-State	4	S0.C0.P4
S0.Cx.Px	NB COF	6,15	1800 MHz
	VID_VDDNB Min	15	1.0250 V
	VID_VDDNB Max	15	1.1000 V
	IDDNB Max	12	17.2 A
S0.C0.P0	CPU COF	6	2200 MHz
	TDP	3,7	115.0 W
	Max Power	18	135.0 W
	VID_VDD Min	9	1.0000 V
	VID_VDD Max	9	1.1875 V
	IDD TDC		98.3 A
S0.C0.P1	CPU COF	6	1800 MHz
	TDP	3,7	99.2 W
	Max Power	18	113.5 W
	VID_VDD Min	9	0.9500 V
	VID_VDD Max	9	1.1375 V
	IDD TDC		80.1 A
S0.C0.P2	CPU COF	6	1400 MHz
	TDP	3,7	88.1 W
	Max Power	18	98.6 W
	VID_VDD Min	9	0.9250 V
	VID_VDD Max	9	1.1125 V
	IDD TDC		65.6 A
S0.C0.P3	CPU COF	6	1100 MHz
	TDP	3,7	79.4 W
	Max Power	18	87.8 W
	VID_VDD Min	9	0.9000 V
	VID_VDD Max	9	1.0875 V
	IDD TDC		54.2 A
S0.C0.P4	CPU COF	6	800 MHz
	TDP	3,7	71.1 W
	Max Power	18	77.5 W
	VID_VDD Min	9	0.8750 V
	VID_VDD Max	9	1.0625 V
	IDD TDC		43.1 A
S0.C1.Pmin	IDD Max (Pre-Flush)	3,10,17	17.5 A
	IDD Max (Post-Flush)	3,10,17	11.6 A
S0.C1e.Pmin	TDP	19	11.2 W
	I/O Power		8.7 W
S0	I/O Power	21	23.2 W
S3	I/O Power	20	600 mW

The notes for this table are on page 80.

State	Specification[8]	Notes	OS6128WKT8EGO	OS6134WKT8EGO
S0.C0.Px	Tcase Max	1	55 °C to 70 °C	55 °C to 70 °C
	Tctl Max	2	70 °C	70 °C
	Tambient Min		5 °C	5 °C
	Thermal Profile		R	R
	Startup P-State	5	S0.C0.P4	S0.C0.P4
	HTC P-State	4	S0.C0.P4	S0.C0.P4
S0.Cx.Px	NB COF	6,15	1800 MHz	1800 MHz
	VID_VDDNB Min	15	1.0250 V	1.0250 V
	VID_VDDNB Max	15	1.1000 V	1.1000 V
	IDDNB Max	12	21.1 A	19.4 A
S0.C0.P0	CPU COF	6	2000 MHz	2300 MHz
	TDP	3,7	115.0 W	115.0 W
	Max Power	18	135.0 W	135.0 W
	VID_VDD Min	9	1.0000 V	1.0375 V
	VID_VDD Max	9	1.3000 V	1.3000 V
	IDD TDC		84.8 A	87.9 A
S0.C0.P1	CPU COF	6	1500 MHz	1800 MHz
	TDP	3,7	99.7 W	97.9 W
	Max Power	18	109.1 W	111.3 W
	VID_VDD Min	9	0.9500 V	0.9750 V
	VID_VDD Max	9	1.2375 V	1.2375 V
	IDD TDC		66.5 A	69.8 A
S0.C0.P2	CPU COF	6	1200 MHz	1400 MHz
	TDP	3,7	90.3 W	87.2 W
	Max Power	18	96.2 W	94.8 W
	VID_VDD Min	9	0.9125 V	0.9375 V
	VID_VDD Max	9	1.2000 V	1.2000 V
	IDD TDC		56.2 A	57.6 A
S0.C0.P3	CPU COF	6	1000 MHz	1100 MHz
	TDP	3,7	83.2 W	78.8 W
	Max Power	18	88.4 W	84.9 W
	VID_VDD Min	9	0.8750 V	0.9000 V
	VID_VDD Max	9	1.1625 V	1.1625 V
	IDD TDC		48.5 A	47.9 A
S0.C0.P4	CPU COF	6	800 MHz	800 MHz
	TDP	3,7	77.0 W	71.2 W
	Max Power	18	81.1 W	75.7 W
	VID_VDD Min	9	0.8375 V	0.8625 V
	VID_VDD Max	9	1.1250 V	1.1250 V
	IDD TDC		41.0 A	38.6 A
S0.C1.Pmin	IDD Max (Pre-Flush)	3,10,17	21.3 A	18.7 A
	IDD Max (Post-Flush)	3,10,17	17.7 A	15.1 A
S0.C1e.Pmin	TDP	19	17.0 W	14.5 W
	I/O Power		8.7 W	8.7 W
S0	I/O Power	21	24.4 W	23.9 W
S3	I/O Power	20	600 mW	600 mW

The notes for this table are on page 80.

State	Specification[8]	Notes	OS6136WKT8EGO
S0.C0.Px	Tcase Max	1	55 °C to 70 °C
	Tctl Max	2	70 °C
	Tambient Min		5 °C
	Thermal Profile		R
	Startup P-State	5	S0.C0.P4
	HTC P-State	4	S0.C0.P4
S0.Cx.Px	NB COF	6,15	1800 MHz
	VID_VDDNB Min	15	1.0250 V
	VID_VDDNB Max	15	1.1000 V
	IDDNB Max	12	19.0 A
S0.C0.P0	CPU COF	6	2400 MHz
	TDP	3,7	115.0 W
	Max Power	18	135.0 W
	VID_VDD Min	9	1.0375 V
	VID_VDD Max	9	1.3000 V
	IDD TDC		89.0 A
S0.C0.P1	CPU COF	6	1900 MHz
	TDP	3,7	98.0 W
	Max Power	18	111.4 W
	VID_VDD Min	9	0.9750 V
	VID_VDD Max	9	1.2375 V
	IDD TDC		70.9 A
S0.C0.P2	CPU COF	6	1500 MHz
	TDP	3,7	87.4 W
	Max Power	18	95.3 W
	VID_VDD Min	9	0.9375 V
	VID_VDD Max	9	1.2000 V
	IDD TDC		58.7 A
S0.C0.P3	CPU COF	6	1100 MHz
	TDP	3,7	77.6 W
	Max Power	18	83.7 W
	VID_VDD Min	9	0.9000 V
	VID_VDD Max	9	1.1625 V
	IDD TDC		47.1 A
S0.C0.P4	CPU COF	6	800 MHz
	TDP	3,7	70.0 W
	Max Power	18	74.5 W
	VID_VDD Min	9	0.8625 V
	VID_VDD Max	9	1.1250 V
	IDD TDC		37.8 A
S0.C1.Pmin	IDD Max (Pre-Flush)	3,10,17	18.2 A
	IDD Max (Post-Flush)	3,10,17	14.5 A
S0.C1e.Pmin	TDP	19	14.0 W
	I/O Power		8.7 W
S0	I/O Power	21	23.8 W
S3	I/O Power	20	600 mW

The notes for this table are on page 80.

2.3.28 OS mmmm VA pnc GO (85 W Server, G34r1) Thermal and Power Specifications

State	Specification[8]	Notes	OS6164VATCEGO
S0.C0.Px	Tcase Max	1	55 °C to 65 °C
	Tctl Max	2	70 °C
	Tambient Min		5 °C
	Thermal Profile		S
	Startup P-State	5	S0.C0.P4
	HTC P-State	4	S0.C0.P4
S0.Cx.Px	NB COF	6,15	1800 MHz
	VID_VDDNB Min	15	1.0250 V
	VID_VDDNB Max	15	1.1000 V
	IDDNB Max	12	16.9 A
S0.C0.P0	CPU COF	6	1700 MHz
	TDP	3,7	85.0 W
	Max Power	18	100.0 W
	VID_VDD Min	9	0.8500 V
	VID_VDD Max	9	1.0750 V
	IDD TDC		68.8 A
S0.C0.P1	CPU COF	6	1500 MHz
	TDP	3,7	79.1 W
	Max Power	18	91.1 W
	VID_VDD Min	9	0.8250 V
	VID_VDD Max	9	1.0625 V
	IDD TDC		60.2 A
S0.C0.P2	CPU COF	6	1200 MHz
	TDP	3,7	71.8 W
	Max Power	18	79.5 W
	VID_VDD Min	9	0.8000 V
	VID_VDD Max	9	1.0250 V
	IDD TDC		49.3 A
S0.C0.P3	CPU COF	6	1000 MHz
	TDP	3,7	66.4 W
	Max Power	18	72.8 W
	VID_VDD Min	9	0.7750 V
	VID_VDD Max	9	1.0000 V
	IDD TDC		42.0 A
S0.C0.P4	CPU COF	6	800 MHz
	TDP	3,7	61.5 W
	Max Power	18	66.8 W
	VID_VDD Min	9	0.7500 V
	VID_VDD Max	9	0.9750 V
	IDD TDC		35.0 A
S0.C1.Pmin	IDD Max (Pre-Flush)	3,10,17	13.5 A
	IDD Max (Post-Flush)	3,10,17	8.4 A
S0.C1e.Pmin	TDP	19	8.6 W
	I/O Power		8.7 W
S0	I/O Power	21	23.1 W
S3	I/O Power	20	600 mW

The notes for this table are on page 80.

State	Specification[8]	Notes	OS6124VAT8EGO	OS6128VAT8EGO
S0.C0.Px	Tcase Max	1	55 °C to 66 °C	55 °C to 66 °C
	Tctl Max	2	70 °C	70 °C
	Tambient Min		5 °C	5 °C
	Thermal Profile		T	T
	Startup P-State	5	S0.C0.P4	S0.C0.P4
	HTC P-State	4	S0.C0.P4	S0.C0.P4
S0.Cx.Px	NB COF	6,15	1800 MHz	1800 MHz
	VID_VDDNB Min	15	1.0250 V	1.0250 V
	VID_VDDNB Max	15	1.1000 V	1.1000 V
	IDDNB Max	12	17.9 A	17.1 A
S0.C0.P0	CPU COF	6	1800 MHz	2000 MHz
	TDP	3,7	85.0 W	85.0 W
	Max Power	18	100.0 W	100.0 W
	VID_VDD Min	9	0.9000 V	0.8875 V
	VID_VDD Max	9	1.2000 V	1.2000 V
	IDD TDC		61.0 A	63.2 A
S0.C0.P1	CPU COF	6	1600 MHz	1700 MHz
	TDP	3,7	79.6 W	78.5 W
	Max Power	18	91.3 W	89.2 W
	VID_VDD Min	9	0.8750 V	0.8625 V
	VID_VDD Max	9	1.1750 V	1.1750 V
	IDD TDC		54.4 A	54.5 A
S0.C0.P2	CPU COF	6	1300 MHz	1400 MHz
	TDP	3,7	72.4 W	71.3 W
	Max Power	18	79.0 W	77.8 W
	VID_VDD Min	9	0.8375 V	0.8250 V
	VID_VDD Max	9	1.1375 V	1.1375 V
	IDD TDC		46.1 A	46.4 A
S0.C0.P3	CPU COF	6	1100 MHz	1100 MHz
	TDP	3,7	69.0 W	66.5 W
	Max Power	18	74.3 W	71.8 W
	VID_VDD Min	9	0.8250 V	0.8125 V
	VID_VDD Max	9	1.1125 V	1.1125 V
	IDD TDC		40.3 A	38.8 A
S0.C0.P4	CPU COF	6	800 MHz	800 MHz
	TDP	3,7	63.7 W	61.5 W
	Max Power	18	67.7 W	65.6 W
	VID_VDD Min	9	0.8000 V	0.7875 V
	VID_VDD Max	9	1.0875 V	1.0875 V
	IDD TDC		32.9 A	31.4 A
S0.C1.Pmin	IDD Max (Pre-Flush)	3,10,17	14.9 A	13.9 A
	IDD Max (Post-Flush)	3,10,17	11.5 A	10.4 A
S0.C1e.Pmin	TDP	19	11.2 W	10.3 W
	I/O Power		8.7 W	8.7 W
S0	I/O Power	21	23.6 W	23.3 W
S3	I/O Power	20	600 mW	600 mW

The notes for this table are on page 80.

2.3.29 OS mmmm YE pnc GO (140 W Server, G34r1) Thermal and Power Specifications

State	Specification[8]	Notes	OS6176YETCEGO
S0.C0.Px	Tcase Max	1	55 °C to 64 °C
	Tctl Max	2	70 °C
	Tambient Min		5 °C
	Thermal Profile		V
	Startup P-State	5	S0.C0.P4
	HTC P-State	4	S0.C0.P4
S0.Cx.Px	NB COF	6,15	1800 MHz
	VID_VDDNB Min	15	1.0250 V
	VID_VDDNB Max	15	1.1000 V
	IDDNB Max	12	22.5 A
S0.C0.P0	CPU COF	6	2300 MHz
	TDP	3,7	140.0 W
	Max Power	18	165.0 W
	VID_VDD Min	9	1.0375 V
	VID_VDD Max	9	1.2500 V
	IDD TDC		113.5 A
S0.C0.P1	CPU COF	6	2000 MHz
	TDP	3,7	126.6 W
	Max Power	18	145.0 W
	VID_VDD Min	9	1.0000 V
	VID_VDD Max	9	1.2125 V
	IDD TDC		99.1 A
S0.C0.P2	CPU COF	6	1600 MHz
	TDP	3,7	110.3 W
	Max Power	18	121.5 W
	VID_VDD Min	9	0.9500 V
	VID_VDD Max	9	1.1625 V
	IDD TDC		80.8 A
S0.C0.P3	CPU COF	6	1200 MHz
	TDP	3,7	93.9 W
	Max Power	18	102.2 W
	VID_VDD Min	9	0.8875 V
	VID_VDD Max	9	1.1000 V
	IDD TDC		62.1 A
S0.C0.P4	CPU COF	6	800 MHz
	TDP	3,7	77.6 W
	Max Power	18	82.9 W
	VID_VDD Min	9	0.8000 V
	VID_VDD Max	9	0.8375 V
	IDD TDC		42.9 A
S0.C1.Pmin	IDD Max (Pre-Flush)	3,10,17	20.2 A
	IDD Max (Post-Flush)	3,10,17	15.1 A
S0.C1e.Pmin	TDP	19	14.5 W
	I/O Power		8.7 W
S0	I/O Power	21	24.2 W
S3	I/O Power	20	600 mW

The notes for this table are on page 80.

2.3.30 OS mmmm WL pnc GO (95 W Server, C32) Thermal and Power Specifications

State	Specification[8]	Notes	OS4184WLU6DGO	OS4180WLU6DGO
S0.C0.Px	Tcase Max	1	55 °C to 70 °C	55 °C to 70 °C
	Tctl Max	2	70 °C	70 °C
	Tambient Min		5 °C	5 °C
	Thermal Profile		Y	Y
	Startup P-State	5	S0.C0.P4	S0.C0.P4
	HTC P-State	4	S0.C0.P4	S0.C0.P4
S0.Cx.Px	NB COF	6,15	2200 MHz	2200 MHz
	VID_VDDNB Min	15	1.0750 V	1.0750 V
	VID_VDDNB Max	15	1.2000 V	1.2000 V
	IDDNB Max	12	14.0 A	14.8 A
S0.C0.P0	CPU COF	6	2800 MHz	2600 MHz
	TDP	3,7	95.0 W	95.0 W
	Max Power	18	115.0 W	113.9 W
	VID_VDD Min	9	1.1250 V	1.1250 V
	VID_VDD Max	9	1.3500 V	1.3500 V
	IDD TDC		79.0 A	77.4 A
S0.C0.P1	CPU COF	6	2500 MHz	2300 MHz
	TDP	3,7	85.1 W	85.0 W
	Max Power	18	100.9 W	99.8 W
	VID_VDD Min	9	1.0875 V	1.0875 V
	VID_VDD Max	9	1.3125 V	1.3125 V
	IDD TDC		69.6 A	67.9 A
S0.C0.P2	CPU COF	6	1900 MHz	1800 MHz
	TDP	3,7	69.0 W	70.2 W
	Max Power	18	77.8 W	78.6 W
	VID_VDD Min	9	1.0250 V	1.0250 V
	VID_VDD Max	9	1.2500 V	1.2500 V
	IDD TDC		53.3 A	53.3 A
S0.C0.P3	CPU COF	6	1400 MHz	1300 MHz
	TDP	3,7	57.6 W	58.7 W
	Max Power	18	64.4 W	65.1 W
	VID_VDD Min	9	0.9750 V	0.9750 V
	VID_VDD Max	9	1.1875 V	1.1875 V
	IDD TDC		40.9 A	40.8 A
S0.C0.P4	CPU COF	6	800 MHz	800 MHz
	TDP	3,7	40.9 W	42.8 W
	Max Power	18	45.0 W	46.9 W
	VID_VDD Min	9	0.8250 V	0.8250 V
	VID_VDD Max	9	0.8500 V	0.8500 V
	IDD TDC		22.9 A	24.0 A
S0.C1.Pmin	IDD Max (Pre-Flush)	3,10,17	9.6 A	10.4 A
	IDD Max (Post-Flush)	3,10,17	7.0 A	7.7 A
S0.C1e.Pmin	TDP	19	7.9 W	8.8 W
	I/O Power		4.2 W	4.2 W
S0	I/O Power	21	10.9 W	11.1 W
S3	I/O Power	20	200 mW	200 mW

The notes for this table are on page 80.

2.3.31 OS mmmm WL pnc GN (95 W Server, C32) Thermal and Power Specifications

State	Specification[8]	Notes	OS4130WLU4DGN	OS4122WLU4DGN
S0.C0.Px	Tcase Max	1	55 °C to 70 °C	55 °C to 70 °C
	Tctl Max	2	70 °C	70 °C
	Tambient Min		5 °C	5 °C
	Thermal Profile		Y	Y
	Startup P-State	5	S0.C0.P4	S0.C0.P4
	HTC P-State	4	S0.C0.P4	S0.C0.P4
S0.Cx.Px	NB COF	6,15	2200 MHz	2200 MHz
	VID_VDDNB Min	15	1.1000 V	1.1000 V
	VID_VDDNB Max	15	1.2500 V	1.2500 V
	IDDNB Max	12	17.2 A	18.3 A
S0.C0.P0	CPU COF	6	2600 MHz	2200 MHz
	TDP	3,7	95.0 W	95.0 W
	Max Power	18	107.9 W	106.7 W
	VID_VDD Min	9	1.1625 V	1.1625 V
	VID_VDD Max	9	1.3125 V	1.3125 V
	IDD TDC		70.3 A	68.1 A
S0.C0.P1	CPU COF	6	2300 MHz	1900 MHz
	TDP	3,7	86.0 W	85.9 W
	Max Power	18	96.4 W	94.7 W
	VID_VDD Min	9	1.1250 V	1.1250 V
	VID_VDD Max	9	1.2750 V	1.2750 V
	IDD TDC		62.3 A	59.9 A
S0.C0.P2	CPU COF	6	1800 MHz	1600 MHz
	TDP	3,7	74.2 W	76.0 W
	Max Power	18	81.0 W	82.6 W
	VID_VDD Min	9	1.0750 V	1.0750 V
	VID_VDD Max	9	1.2250 V	1.2250 V
	IDD TDC		50.9 A	50.9 A
S0.C0.P3	CPU COF	6	1300 MHz	1200 MHz
	TDP	3,7	63.9 W	66.4 W
	Max Power	18	69.2 W	71.5 W
	VID_VDD Min	9	1.0250 V	1.0250 V
	VID_VDD Max	9	1.1750 V	1.1750 V
	IDD TDC		40.4 A	41.4 A
S0.C0.P4	CPU COF	6	800 MHz	800 MHz
	TDP	3,7	49.7 W	52.5 W
	Max Power	18	53.3 W	56.1 W
	VID_VDD Min	9	0.8875 V	0.8875 V
	VID_VDD Max	9	0.9000 V	0.9000 V
	IDD TDC		26.1 A	27.7 A
S0.C1.Pmin	IDD Max (Pre-Flush)	3,10,17	13.3 A	14.5 A
	IDD Max (Post-Flush)	3,10,17	11.4 A	12.6 A
S0.C1e.Pmin	TDP	19	12.9 W	14.2 W
	I/O Power		4.2 W	4.2 W
S0	I/O Power	21	11.3 W	11.5 W
S3	I/O Power	20	200 mW	200 mW

The notes for this table are on page 80.

2.3.32 OS mmmm OF pnc GO (65 W Server, C32) Thermal and Power Specifications

State	Specification[8]	Notes	OS4170OFU6DGO	OS4174OFU6DGO
S0.C0.Px	Tcase Max	1	55 °C to 70 °C	55 °C to 70 °C
	Tctl Max	2	70 °C	70 °C
	Tambient Min		5 °C	5 °C
	Thermal Profile		W	W
	Startup P-State	5	S0.C0.P4	S0.C0.P4
	HTC P-State	4	S0.C0.P4	S0.C0.P4
S0.Cx.Px	NB COF	6,15	2200 MHz	2200 MHz
	VID_VDDNB Min	15	1.0750 V	1.0750 V
	VID_VDDNB Max	15	1.2000 V	1.2000 V
	IDDNB Max	12	16.0 A	15.2 A
S0.C0.P0	CPU COF	6	2100 MHz	2300 MHz
	TDP	3,7	65.0 W	65.0 W
	Max Power	18	78.0 W	79.0 W
	VID_VDD Min	9	0.9125 V	0.9125 V
	VID_VDD Max	9	1.1875 V	1.1875 V
	IDD TDC		52.8 A	54.4 A
S0.C0.P1	CPU COF	6	1800 MHz	2000 MHz
	TDP	3,7	59.6 W	59.6 W
	Max Power	18	68.4 W	69.5 W
	VID_VDD Min	9	0.8875 V	0.8875 V
	VID_VDD Max	9	1.1625 V	1.1625 V
	IDD TDC		45.7 A	47.4 A
S0.C0.P2	CPU COF	6	1400 MHz	1600 MHz
	TDP	3,7	51.8 W	51.8 W
	Max Power	18	57.3 W	57.7 W
	VID_VDD Min	9	0.8375 V	0.8375 V
	VID_VDD Max	9	1.1000 V	1.1000 V
	IDD TDC		36.0 A	37.7 A
S0.C0.P3	CPU COF	6	1100 MHz	1200 MHz
	TDP	3,7	46.8 W	45.8 W
	Max Power	18	51.3 W	50.6 W
	VID_VDD Min	9	0.8000 V	0.8000 V
	VID_VDD Max	9	1.0625 V	1.0625 V
	IDD TDC		29.5 A	29.8 A
S0.C0.P4	CPU COF	6	800 MHz	800 MHz
	TDP	3,7	43.5 W	41.7 W
	Max Power	18	47.4 W	45.6 W
	VID_VDD Min	9	0.7875 V	0.7875 V
	VID_VDD Max	9	0.8250 V	0.8250 V
	IDD TDC		24.7 A	23.6 A
S0.C1.Pmin	IDD Max (Pre-Flush)	3,10,17	11.1 A	10.4 A
	IDD Max (Post-Flush)	3,10,17	8.6 A	7.9 A
S0.C1e.Pmin	TDP	19	9.3 W	8.5 W
	I/O Power		4.2 W	4.2 W
S0	I/O Power	21	11.4 W	11.3 W
S3	I/O Power	20	200 mW	200 mW

The notes for this table are on page 80.

State	Specification[8]	Notes	OS4176OFU6DGO
S0.C0.Px	Tcase Max	1	55 °C to 70 °C
	Tctl Max	2	70 °C
	Tambient Min		5 °C
	Thermal Profile		W
	Startup P-State	5	S0.C0.P4
	HTC P-State	4	S0.C0.P4
S0.Cx.Px	NB COF	6,15	2200 MHz
	VID_VDDNB Min	15	1.0750 V
	VID_VDDNB Max	15	1.2000 V
	IDDNB Max	12	14.8 A
S0.C0.P0	CPU COF	6	2400 MHz
	TDP	3,7	65.0 W
	Max Power	18	79.6 W
	VID_VDD Min	9	0.9125 V
	VID_VDD Max	9	1.1875 V
	IDD TDC		55.3 A
S0.C0.P1	CPU COF	6	2100 MHz
	TDP	3,7	59.6 W
	Max Power	18	70.1 W
	VID_VDD Min	9	0.8875 V
	VID_VDD Max	9	1.1625 V
	IDD TDC		48.3 A
S0.C0.P2	CPU COF	6	1600 MHz
	TDP	3,7	50.9 W
	Max Power	18	56.8 W
	VID_VDD Min	9	0.8375 V
	VID_VDD Max	9	1.1000 V
	IDD TDC		37.1 A
S0.C0.P3	CPU COF	6	1200 MHz
	TDP	3,7	44.9 W
	Max Power	18	49.7 W
	VID_VDD Min	9	0.8000 V
	VID_VDD Max	9	1.0625 V
	IDD TDC		29.3 A
S0.C0.P4	CPU COF	6	800 MHz
	TDP	3,7	40.8 W
	Max Power	18	44.7 W
	VID_VDD Min	9	0.7875 V
	VID_VDD Max	9	0.8250 V
	IDD TDC		23.1 A
S0.C1.Pmin	IDD Max (Pre-Flush)	3,10,17	10.1 A
	IDD Max (Post-Flush)	3,10,17	7.5 A
S0.C1e.Pmin	TDP	19	8.1 W
	I/O Power		4.2 W
S0	I/O Power	21	11.2 W
S3	I/O Power	20	200 mW

The notes for this table are on page 80.

2.3.33 OS mmmm HJ pnc GO (35 W Server, C32) Thermal and Power Specifications

State	Specification[8]	Notes	OS4164HJU6DGO	OS4162HJU6DGO
S0.C0.Px	Tcase Max	1	55 °C to 65 °C	55 °C to 65 °C
	Tctl Max	2	70 °C	70 °C
	Tambient Min		5 °C	5 °C
	Thermal Profile		Z	Z
	Startup P-State	5	S0.C0.P4	S0.C0.P4
	HTC P-State	4	S0.C0.P4	S0.C0.P4
S0.Cx.Px	NB COF	6,15	1800 MHz	1800 MHz
	VID_VDDNB Min	15	0.9750 V	0.9750 V
	VID_VDDNB Max	15	1.1250 V	1.1250 V
	IDDNB Max	12	10.2 A	10.5 A
S0.C0.P0	CPU COF	6	1800 MHz	1700 MHz
	TDP	3,7	35.0 W	35.0 W
	Max Power	18	43.0 W	43.0 W
	VID_VDD Min	9	0.7625 V	0.7625 V
	VID_VDD Max	9	0.9625 V	0.9625 V
	IDD TDC		34.8 A	33.8 A
S0.C0.P1	CPU COF	6	1600 MHz	1500 MHz
	TDP	3,7	33.0 W	33.0 W
	Max Power	18	39.6 W	39.5 W
	VID_VDD Min	9	0.7500 V	0.7500 V
	VID_VDD Max	9	0.9500 V	0.9500 V
	IDD TDC		31.0 A	30.0 A
S0.C0.P2	CPU COF	6	1400 MHz	1300 MHz
	TDP	3,7	31.4 W	31.3 W
	Max Power	18	37.2 W	36.8 W
	VID_VDD Min	9	0.7375 V	0.7375 V
	VID_VDD Max	9	0.9250 V	0.9250 V
	IDD TDC		27.9 A	26.8 A
S0.C0.P3	CPU COF	6	1100 MHz	1100 MHz
	TDP	3,7	29.0 W	29.6 W
	Max Power	18	33.4 W	34.1 W
	VID_VDD Min	9	0.7375 V	0.7375 V
	VID_VDD Max	9	0.9125 V	0.9125 V
	IDD TDC		23.1 A	23.4 A
S0.C0.P4	CPU COF	6	800 MHz	800 MHz
	TDP	3,7	26.5 W	27.1 W
	Max Power	18	30.1 W	30.7 W
	VID_VDD Min	9	0.7250 V	0.7250 V
	VID_VDD Max	9	0.8250 V	0.8250 V
	IDD TDC		18.7 A	18.9 A
S0.C1.Pmin	IDD Max (Pre-Flush)	3,10,17	7.7 A	8.1 A
	IDD Max (Post-Flush)	3,10,17	5.4 A	5.7 A
S0.C1e.Pmin	TDP	19	4.9 W	5.2 W
	I/O Power		4.2 W	4.2 W
S0	I/O Power	21	7.9 W	7.9 W
S3	I/O Power	20	200 mW	200 mW

The notes for this table are on page 80.

AMD Opteron™ Processor Thermal and Power Specification Table Notes:

1. *Tcase Max is the maximum case temperature specification, which is a physical value in degrees Celsius. Tcase Max can be any valid Tcase Max value in the range specified for the corresponding OPN.*
2. *Tctl Max (maximum control temperature) is a non-physical temperature on an arbitrary scale that can be used for system thermal management policies. Refer to the* BIOS and Kernel Developer's Guide (BKDG) For AMD Family 10h Processors*, order #31116.*
3. *TDP is measured under the conditions of all cores operating at CPU COF, Tcase Max, and VDD at the voltage requested by the processor. TDP includes all power dissipated on-die from VDD, VDDNB, VDDIO, VLDT, VTT and VDDA.*
4. *P-State limit when HTC is active. Refer to the BIOS and Kernel Developer's Guide (BKDG) for AMD Family 10h Processors, order# 31116 for more information.*
5. *Hardware transitions the part to Startup P-State at cold boot. During initialization, the startup NB COF and VID_VDDNB values may differ from those of the startup P-State. Please see the BIOS and Kernel Developer's Guide (BKDG) for AMD Family 10h Processors, order# 31116 for detailed power sequencing information.*
6. *Frequency reported to the OS is rounded to the nearest 100-MHz boundary.*
7. *The processor thermal solution should be designed to accommodate thermal design power (TDP) at Tcase,max.TDP is not the maximum power of the processor.*
8. *Specifications for multi-core processors assume equivalent P-States (voltage and frequency) and equivalent Tcase conditions for all cores. Refer to the BIOS and Kernel Developer's Guide (BKDG) for AMD Family 10h Processors, order# 31116, for details on P-State operation for multi-core processors.*
9. *Variable voltage, any valid voltage between VDD min and VDD max is allowed.*
10. *TDP IDD conditions: single plane platforms supply IDD and IDDNB tied together and use the IDD Max specification.*
11. *Single-plane platforms have VID_VDD and VID_VDDNB tied together, and use the VID_VDD specification.*
12. *TDP IDDNB conditions: single-plane platforms supply IDD and IDDNB tied together and use the IDD Max specification.*
13. *Thermal Design Power dissipated by the processor VDDIO and VTT power planes only. Assumes VDDIO = 1.8 V and VTT = VDDIO / 2.*
14. *Refer to erratum 308 in the* Revision Guide for AMD Family 10h Processors*, Order# 41322 for the appropriate clock divisor setting.*
15. *During initialization, the startup NB COF and VID_VDDNB values may differ from those of the startup P-State. See the BIOS and Kernel Developer's Guide (BKDG) for AMD Family 10h Processors, order# 31116, for specific power sequencing information.*
16. *This product is intended for dual-plane platforms only.*
17. *IDDMax (Pre-Flush) and (Post-Flush) refer to the Cache Flush On Halt feature described in the* BIOS and Kernel Developer's Guide (BKDG) for AMD Family 10h Processors*, order# 31116. IDDMax pre-flush and post-flush values are based on the recommended* BKDG *settings. Actual C1 idle current varies with system usage according to the following equation:*
    *C1 idle current = F3xDC[CashFlushOnHaltTmr]/OS timer tick interval * Idd Max (Pre-Flush) + (1 - F3xDC[CachFlushOnHaltTmr]/OS timer tick interval * Idd Max (Post-Flush))*
    The default Microsoft® Windows Vista® timer tick interval is 15.6 ms. This interval varies between operating systems and within an operating system depending on usage.
18. *Maximum Sustained Power dissipated by the processor at nominal voltage and maximum specified case or die temperature.*
19. *Assumes 35°C, min P-State VID_VDD, core clock divider set to StpClk and NB clock divider set to 16.Power saving comes from asserting LDTSTOP to place HyperTransport™ phys into LS2. Recommended settings are in the BIOS and Kernel Developer's Guide (BKDG) for AMD Family 10h Processors, order# 31116.*
20. *Thermal Design Power dissipated by the processor (VDDIO power plane only). Assume VDDIO = 1.5 V*
21. *Thermal Design Power dissipated by the processor VDDIO, VDDR, VLDT and VDDA power planes.*

3 Power Supply Specifications

For socket infrastructures not covered by this document refer to the *AMD Infrastructure Roadmap*, order# 41842.

3.1 bsmmmmrr L ncdd – Fr2 (1207) Power Supply Operating Conditions

Table 10. bsmmmmrr L ncdd DC Operating Conditions for VDD Power Supply

Symbol	Parameter	Units	Min	Typ	Max	Notes
VID_VDD	VID-Requested VDD Supply Level	V	Refer to the thermal/power tables under the appropriate SOPN section for this OPN-specific parameter.			
VDD_dc	DC Tolerance - VDD Supply Voltage	V	VID_VDD –50 mV	VID_VDD	VID_VDD + 50 mV	
VDD_PON	Metal Mask VID_VDD	V	0.95	1.00	MaxVID_VDD	1,2
VDDNB_dc	VDDNB Supply voltage	V	VID_VDDNB –50 mV	VID_VDDNB	VID_VDDNB + 50 mV	
VID_VDDNB	VDDNB Supply voltage	V	Refer to the thermal/power tables under the appropriate SOPN section for this OPN-specific parameter.			
VDDNB_PON	Metal Mask VDDNB	V	0.95	1.00	1.30	2

Notes:

1) After PWROK assertion, the VID signals change from the Metal Mask VID to the value programmed during device manufacturing.

2) MaxVID is reported in MSRC001_0071 (COFVID_STATUS).

Table 11. bsmmmmrr L ncdd AC Operating Conditions for VDD Power Supply

Symbol	Parameter	Units	Min	Typ	Max	Notes
VDD_ac	VDD Supply Voltage	V	VID_VDD –100 mV	VID_VDD	VID_VDD + 100 mV	1
VDDNB_ac	VDDNB Supply Voltage	V	VID_VDDNB –100 mV	VID_VDDNB	VID_VDDNB + 100 mV	1

Notes:

1) The voltage set-point must be contained within the DC specification in order to ensure proper operation. Voltage ripple and transient events outside the DC specification must remain within the AC specification at all times. Transients above dc max must return to within the DC specification within 15 µS and must stay under a triangle described by the AC limit at one end and the DC limit at the other, as shown in Figure 3 on page 82.

Table 12. bsmmmmrr L ncdd Maximum Power-Up and Power-Down Conditions for Power Supplies

Symbol	Parameter	Units	Max
VDDIO	VDDIO Supply Voltage for DDR2 electricals	V	2.05
VDDIO	VDDIO Supply Voltage for DDR3 electricals	V	1.65
VLDT	VLDT Supply Voltage	V	1.32
VDDA	VDDA Supply Voltage	V	2.70
VDD, VDDNB	VDD, VDDNB Supply Voltage	V	Max AC Voltage

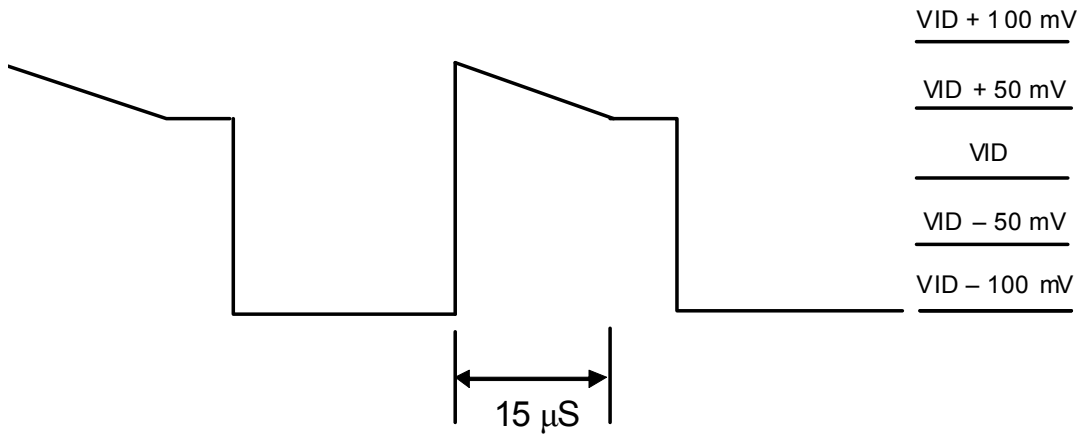

Figure 3. Socket Fr2 (1207) AC and DC Transient Limits

Table 13. bsmmmmrr L ncdd AC and DC Operating Conditions for non-VDD Power Supplies

Symbol	Parameter	Units	Min	Typ	Max	Notes
VDDIO_dc	VDDIO Supply Voltage for DDR2 electricals	V	1.70	1.80	1.90	1
VDDIO_ac	VDDIO Supply voltage	V	VDDIO_dc –150 mV	VDDIO_dc	VDDIO_dc +150 mV	2, 3
VLDT	VLDT Supply Voltage	V	1.14	1.20	1.26	10
VTT_dc	VTT Supply Voltage for DDR2 electricals	V	0.85	0.90	0.95	4
VTT_ac	VTT Supply Voltage	V	VTT_dc –75mV	VTT_dc	VTT_dc + 75mV	2, 3
VDDA	VDDA Supply Voltage	V	2.40	2.50	2.60	
IDDIO1	VDDIO Power Supply Current	A			3.60	7, 9
ITT1	VTT Power Supply Current	A			1.75	6, 8, 9
ILDT	VLDT Power Supply Current	mA			600/ link	5, 9
IDDA	VDDA Power Supply Current	mA			250	9

Notes:

1) All voltages are referenced to VSS. In order to ensure proper functionality, DC voltage regulator must be set accordingly to ensure that VDDIO_dc level measured at the VDDIO_FB_H/L pins does not exceed the specified maximum and minimum range. As such, factors such as voltage regulator inaccuracy and IR drop must be carefully considered and compensated for. For example, if the inaccuracy and IR drop amounts to 50 mV, then the voltage regulator setting for VDDIO should not be lower than 1.75 V to avoid violating the VDDIO_dc minimum spec of 1.70 V.

2) VDDIO_ac and VTT_ac parameters are measured over 60 seconds time frame with all data bus bits switching.

3) Power supply A/C measurements use a 20-MHz scope bandwidth limit.

*4) All voltages are referenced to VSS. Voltage regulator for VTT must be set accordingly so that VTT_dc level measured at the processor VTT_SENSE pin tracks 0.5*VDDIO_DC and stays within the specified maximum and minimum range. Factors such as voltage regulator inaccuracy and IR drop must be carefully considered and compensated for. For example, if the inaccuracy and IR drop amounts to 20 mV, the voltage regulator setting must be set 20 mV higher so that VTT still tracks 0.5*VDDIO_dc and stays within the range of 0.85 V and 0.95 V.*

5) ILDT is specified for each unconnected HyperTransport™ link or for each 16x16 bit Gen1 HyperTransport link operating at max 2.0 GT/s or less. Please refer to erratum 396.

6) VTT must both sink and source current.

7) VDDIO current is consumed by I, O, I/O switching current and on-chip functions (PDL, DLL, level-shifters, etc.).

8) VTT current is consumed by I, O, I/O switching current and on-chip functions (PDL, DLL, level-shifters, etc.).

9) This specification reflects the values published in the appropriate power roadmap document.

10) Tolerances apply to both VLDT_dc and VLDT_ac conditions.

3.2 bsmmmmrr P ncdd – Fr5 (1207) Power Supply Operating Conditions

Table 14. bsmmmmrr P ncdd DC Operating Conditions for VDD Power Supply

Symbol	Parameter	Units	Min	Typ	Max	Notes
VID_VDD	VID-Requested VDD Supply Level	V	Refer to the thermal/power tables under the appropriate SOPN section for this OPN-specific parameter.			
VDD_dc	DC Tolerance - VDD Supply Voltage	V	VID_VDD –50 mV	VID_VDD	VID_VDD + 50 mV	
VDD_PON	Metal Mask VID_VDD	V	0.95	1.00	MaxVID_VDD	1,2
VDDNB_dc	VDDNB Supply voltage	V	VID_VDDNB –50 mV	VID_VDDNB	VID_VDDNB + 50 mV	
VID_VDDNB	VDDNB Supply voltage	V	Refer to the thermal/power tables under the appropriate SOPN section for this OPN-specific parameter.			
VDDNB_PON	Metal Mask VDDNB	V	0.95	1.00	1.30	2

Notes:

1) After PWROK assertion, the VID signals change from the Metal Mask VID to the value programmed during device manufacturing.

2) MaxVID is reported in MSRC001_0071 (COFVID_STATUS).

Table 15. bsmmmmrr P ncdd AC Operating Conditions for VDD Power Supply

Symbol	Parameter	Units	Min	Typ	Max	Notes
VDD_ac	VDD Supply Voltage	V	VID_VDD –100 mV	VID_VDD	VID_VDD + 100 mV	1
VDDNB_ac	VDDNB Supply Voltage	V	VID_VDDNB –100 mV	VID_VDDNB	VID_VDDNB + 100 mV	1

Notes:

1) The voltage set-point must be contained within the DC specification in order to ensure proper operation. Voltage ripple and transient events outside the DC specification must remain within the AC specification at all times. Transients above dc max must return to within the DC specification within 15 µS and must stay under a triangle described by the AC limit at one end and the DC limit at the other, as shown in Figure 4 on page 85.

Table 16. bsmmmmrr P ncdd Maximum Power-Up and Power-Down Conditions for Power Supplies

Symbol	Parameter	Units	Max
VDDIO	VDDIO Supply Voltage for DDR2 electricals	V	2.05
VDDIO	VDDIO Supply Voltage for DDR3 electricals	V	1.65
VLDT	VLDT Supply Voltage	V	1.32
VDDA	VDDA Supply Voltage	V	2.70
VDD, VDDNB	VDD, VDDNB Supply Voltage	V	Max AC Voltage

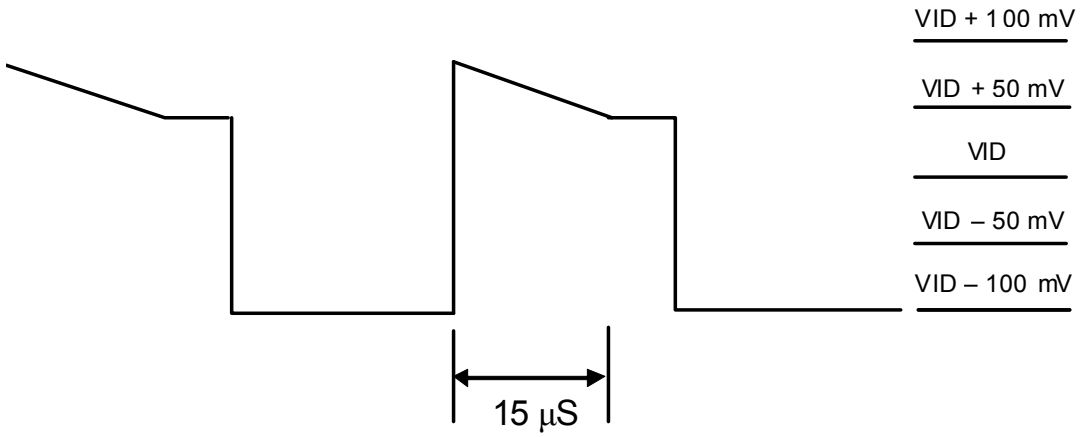

Figure 4. Socket Fr5 (1207) AC and DC Transient Limits

Table 17. bsmmmmrr P ncdd AC and DC Operating Conditions for non-VDD Power Supplies

Symbol	Parameter	Units	Min	Typ	Max	Notes
VDDIO_dc	VDDIO Supply Voltage for DDR2 electricals	V	1.70	1.80	1.90	1
VDDIO_ac	VDDIO Supply voltage	V	VDDIO_dc –150 mV	VDDIO_dc	VDDIO_dc +150 mV	2, 3
VLDT	VLDT Supply Voltage	V	1.14	1.20	1.26	12
VTT_dc	VTT Supply Voltage for DDR2 electricals	V	0.85	0.90	0.95	4
VTT_ac	VTT Supply Voltage	V	VTT_dc –75mV	VTT_dc	VTT_dc + 75mV	2, 3
VDDA	VDDA Supply Voltage	V	2.40	2.50	2.60	
IDDIO1	VDDIO Power Supply Current	A			3.60	7, 9
ITT1	VTT Power Supply Current	A			1.75	6, 8, 9
ILDT	VLDT Power Supply Current	A			1.40/ link	5, 9
					0.60/ link	9,10,11
IDDA	VDDA Power Supply Current	mA			250	9

Notes:

1) All voltages are referenced to VSS. In order to ensure proper functionality, DC voltage regulator must be set accordingly to ensure that VDDIO_dc level measured at the VDDIO_FB_H/L pins does not exceed the specified maximum and minimum range. As such, factors such as voltage regulator inaccuracy and IR drop must be carefully considered and compensated for. For example, if the inaccuracy and IR drop amounts to 50 mV, then the voltage regulator setting for VDDIO should not be lower than 1.75 V to avoid violating the VDDIO_dc minimum spec of 1.70 V.

2) VDDIO_ac and VTT_ac parameters are measured over 60 seconds time frame with all data bus bits switching.

3) Power supply A/C measurements use a 20-MHz scope bandwidth limit.

*4) All voltages are referenced to VSS. Voltage regulator for VTT must be set accordingly so that VTT_dc level measured at the processor VTT_SENSE pin tracks 0.5*VDDIO_DC and stays within the specified maximum and minimum range. Factors such as voltage regulator inaccuracy and IR drop must be carefully considered and compensated for. For example, if the inaccuracy and IR drop amounts to 20 mV, the voltage regulator setting must be set 20 mV higher so that VTT still tracks 0.5*VDDIO_dc and stays within the range of 0.85 V and 0.95 V.*

5) ILDT is specified for each Gen3 16x16-bit HyperTransport™ link operating between 2.4GT/s and 4.8 GT/s.

6) VTT must both sink and source current.

7) VDDIO current is consumed by I, O, I/O switching current and on-chip functions (PDL, DLL, level-shifters, etc.).

8) VTT current is consumed by I, O, I/O switching current and on-chip functions (PDL, DLL, level-shifters, etc.).

9) This specification reflects the values published in the appropriate power roadmap document.

10) ILDT is specified for each unconnected HyperTransport link or for each 16x16 bit Gen1 HyperTransport link operating at max 2.0 GT/s or less.

11) The maximum value is listed as a per link value to allow for a mix of Gen1 and Gen3 links. All links must be powered on a processor. Please refer to erratum 396.

12) Tolerances apply to both VLDT_dc and VLDT_ac conditions.

3.3 bsmmmmrr J ncdd – AM2r2 Power Supply Operating Conditions

Table 18. bsmmmmrr J ncdd DC Operating Conditions for VDD Power Supply

Symbol	Parameter	Units	Min	Typ	Max	Notes
VID_VDD	VID-Requested VDD Supply Level	V	Refer to the thermal/power tables under the appropriate SOPN section for this OPN-specific parameter.			
VDD_dc	DC Tolerance - VDD Supply Voltage	V	VID_VDD – 50 mV	VID_VDD	VID_VDD + 50 mV	
VDD_PON	Metal Mask VID	V	0.95	1.00	MaxVID_VDD	1,2
VDDNB_dc	VDDNB Supply voltage	V	VID_VDDNB – 50 mV	VID_VDDNB	VID_VDDNB + 50 mV	
VID_VDDNB	VDDNB Supply voltage	V	Refer to the thermal/power tables under the appropriate SOPN section for this OPN-specific parameter.			
VDDNB_PON	Metal Mask VDDNB	V	0.95	1.00	MaxVID_VDDNB	1,2

Notes:

1) After PWROK assertion, the VID signals change from the Metal Mask VID to the value programmed during device manufacturing.

2) MaxVID is reported in MSRC001_0071 (COFVID_STATUS).

Table 19. bsmmmmrr J ncdd AC Operating Conditions for VDD Power Supply

Symbol	Parameter	Units	Min	Typ	Max	Notes
VDD_ac	VDD Supply Voltage	V	VID_VDD – 140 mV	VID_VDD	VID_VDD + 150 mV	1
VDDNB_ac	VDDNB Supply Voltage	V	VID_VDDNB – 140 mV	VID_VDDNB	VID_VDDNB + 150 mV	1

Notes:

1) The voltage set-point must be contained within the DC specification in order to ensure proper operation. Voltage ripple and transient events outside the DC specification must remain within the AC specification at all times. Transients above dc max must return to within the DC specification within 30 µS and must stay under a triangle described by the AC limit at one end and the DC limit at the other, as shown in Figure 5 on page 88.

Table 20. bsmmmmrr J ncdd Maximum Power-Up and Power-Down Conditions for Power Supplies

Symbol	Parameter	Units	Max
VDDIO	VDDIO Supply Voltage for DDR2 electricals	V	2.05
VDDIO	VDDIO Supply Voltage for DDR3 electricals	V	1.65
VLDT	VLDT Supply Voltage	V	1.32
VDDA	VDDA Supply Voltage	V	2.70
VDD, VDDNB	VDD, VDDNB Supply Voltage	V	Max AC Voltage

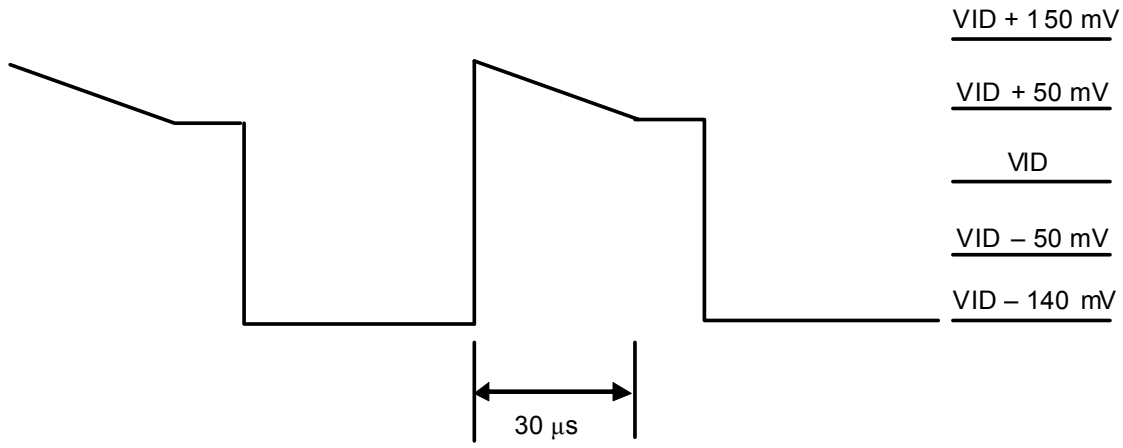

Figure 5. Socket AM2 AC and DC Transient Limits

Table 21. bsmmmmrr J ncdd AC and DC Operating Conditions for non-VDD Power Supplies

Symbol	Parameter	Units	Min	Typ	Max	Notes
VDDIO_dc	VDDIO Supply Voltage for DDR2 electricals	V	1.70	1.80	1.90	1
VDDIO_ac	VDDIO Supply voltage	V	VDDIO_dc – 150 mV	VDDIO_dc	VDDIO_dc + 150 mV	2, 3
VLDT	VLDT Supply Voltage	V	1.14	1.20	1.26	10
VTT_dc	VTT Supply Voltage for DDR2 electricals	V	0.85	0.90	0.95	4
VTT_ac	VTT Supply Voltage	V	VTT_dc – 75mV	VTT_dc	VTT_dc + 75mV	2, 3
VDDA	VDDA Supply Voltage	V	2.40	2.50	2.60	
IDDIO1	VDDIO Power Supply Current	A			3.60	7, 9
ITT1	VTT Power Supply Current	A			1.75	6, 8, 9
ILDT	VLDT Power Supply Current	mA			500/ link	5, 9
IDDA	VDDA Power Supply Current	mA			250	9

Notes:

1) All voltages are referenced to VSS. In order to ensure proper functionality, DC voltage regulator must be set accordingly to ensure that VDDIO_dc level measured at the VDDIO_FB_H/L pins does not exceed the specified maximum and minimum range. As such, factors such as voltage regulator inaccuracy and IR drop must be carefully considered and compensated for. For example, if the inaccuracy and IR drop amounts to 50 mV, then the voltage regulator setting for VDDIO should not be lower than 1.75 V to avoid violating the VDDIO_dc minimum spec of 1.70 V.

2) VDDIO_ac and VTT_ac parameters are measured over 60 seconds time frame with all data bus bits switching.

3) Power supply A/C measurements use a 20-MHz scope bandwidth limit.

*4) All voltages are referenced to VSS. Voltage regulator for VTT must be set accordingly so that VTT_dc level measured at the processor VTT_SENSE pin tracks 0.5*VDDIO_dc and stays within the specified maximum and minimum range. Factors such as voltage regulator inaccuracy and IR drop must be carefully considered and compensated for. For example, if the inaccuracy and IR drop amounts to 20 mV, the voltage regulator setting must be set 20 mV higher so that VTT still tracks 0.5*VDDIO_dc and stays within the range of 0.85 V and 0.95 V.*

5) ILDT is specified for each 16x16-bit HyperTransport™ link operating at 2.0 GT/s.

6) VTT must both sink and source current.

7) VDDIO current is consumed by I, O, I/O switching current and on-chip functions (PDL, DLL, level-shifters, etc.).

8) VTT current is consumed by I, O, I/O switching current and on-chip functions (PDL, DLL, level-shifters, etc.).

9) This specification reflects the values published in the appropriate power roadmap document.

10) Tolerances apply to both VLDT_dc and VLDT_ac conditions.

3.4 bsmmmmrr K ncdd – AM3 Power Supply Operating Conditions

Table 22. bsmmmmrr K ncdd DC Operating Conditions for VDD Power Supply

Symbol	Parameter	Units	Min	Typ	Max	Notes
VID_VDD	VID-Requested VDD Supply Level	V	Refer to the thermal/power tables under the appropriate SOPN section for this OPN-specific parameter.			
VDD_dc	DC Tolerance - VDD Supply Voltage	V	VID_VDD –50 mV	VID_VDD	VID_VDD + 50 mV	
VDD_PON	Metal Mask VID	V	0.95	1.00	MaxVID_VDD	1,2
VDDNB_dc	VDDNB Supply voltage	V	VID_VDDNB –50 mV	VID_VDDNB	VID_VDDNB + 50 mV	
VID_VDDNB	VDDNB Supply voltage	V	Refer to the thermal/power tables under the appropriate SOPN section for this OPN-specific parameter.			
VDDNB_PON	Metal Mask VDDNB	V	0.95	1.00	MaxVID_VDD	1,2

Notes:

1) After PWROK assertion, the VID signals change from the Metal Mask VID to the value programmed during device manufacturing.

2) MaxVID is reported in MSRC001_0071 (COFVID_STATUS).

Table 23. bsmmmmrr K ncdd AC Operating Conditions for VDD Power Supply

Symbol	Parameter	Units	Min	Typ	Max	Notes
VDD_ac	VDD Supply Voltage	V	VID_VDD –140 mV	VID_VDD	VID_VDD + 150 mV	1
VDDNB_ac	VDDNB Supply Voltage	V	VID_VDDNB –140 mV	VID_VDDNB	VID_VDDNB + 150 mV	1

Notes:

1) The voltage set-point must be contained within the DC specification in order to ensure proper operation. Voltage ripple and transient events outside the DC specification must remain within the AC specification at all. times. Transients above dc max must return to within the DC specification within 30 µS and must stay under a triangle described by the AC limit at one end and the DC limit at the other, as shown in Figure 6 on page 91.

Table 24. bsmmmmrr K ncdd Maximum Power-Up and Power-Down Conditions for Power Supplies

Symbol	Parameter	Units	Max
VDDIO	VDDIO Supply Voltage for DDR2 electricals	V	2.05
VDDIO	VDDIO Supply Voltage for DDR3 electricals	V	1.65
VLDT	VLDT Supply Voltage	V	1.32
VDDA	VDDA Supply Voltage	V	2.70
VDD, VDDNB	VDD, VDDNB Supply Voltage	V	Max AC Voltage

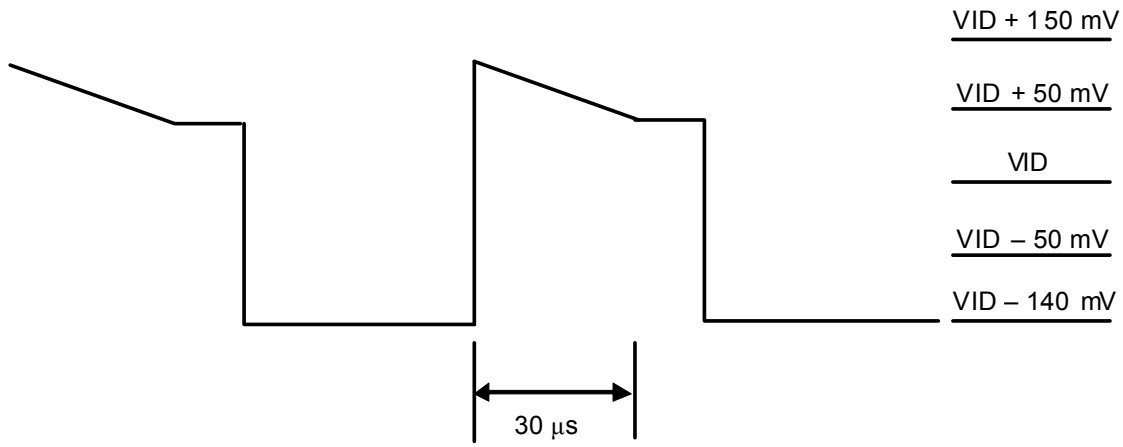

Figure 6. Socket AM3 AC and DC Transient Limits

Table 25. bsmmmmrr K ncdd AC and DC Operating Conditions for non-VDD Power Supplies

Symbol	Parameter	Units	Min	Typ	Max	Notes
VDDIO_dc	VDDIO Supply Voltage for DDR3 electricals	V	1.375	1.500	1.625	1
VDDIO_ac	VDDIO Supply voltage	V	VDDIO_dc – 125 mV	VDDIO_dc	VDDIO_dc + 125 mV	2, 3
VLDT	VLDT Supply Voltage	V	1.14	1.20	1.26	12
VDDR_dc	VDDR Supply Voltage for DDR3 electricals	V	1.14	1.20	1.26	4
VDDR_ac	VDDR Supply Voltage	V	VDDR_dc –60mV	VDDR_dc	VDDR_dc + 60mV	2, 3
VDDA	VDDA Supply Voltage	V	2.40	2.50	2.60	
IDDIO1	VDDIO Power Supply Current	A			3.60	7, 9
IDDR	VDDR Power Supply Current	A			1.75	6, 8, 9
ILDT	VLDT Power Supply Current	A			1.40/ link	5, 9
					0.60/ link	9,10,11
IDDA	VDDA Power Supply Current	mA				9

Notes:

1) All voltages are referenced to VSS. In order to ensure proper functionality, DC voltage regulator must be set accordingly to ensure that VDDIO_dc level measured at the VDDIO_FB_H/L pins does not exceed the specified maximum and minimum range. As such, factors such as voltage regulator inaccuracy and IR drop must be carefully considered and compensated for. For example, if the inaccuracy and IR drop amounts to 50 mV, then the voltage regulator setting for VDDIO should not be lower than 1.475 V to avoid violating the VDDIO_dc minimum spec of 1.375 V.

2) VDDIO_ac and VDDR_ac parameters are measured over 60 seconds time frame with all data bus bits switching.

3) Power supply A/C measurements use a 20-MHz scope bandwidth limit.

4) All voltages are referenced to VSS. Voltage regulator for VDDR must be set accordingly so that VDDR_dc level measured at the processor with VDDR_SENSE pin stay within the specified maximum and minimum DC tolerance limits. Factors such as voltage regulator inaccuracy and IR drop must be carefully considered and compensated for to ensure the VDDR stays within the specified DC tolerance limits.

5) ILDT is specified for one 16x16-bit Gen3 link.

6) VDDR must both sink and source current.

7) VDDIO current is consumed by I, O, I/O switching current and on-chip functions (PDL, DLL, level-shifters, etc.).

8) VDDR current is consumed by I, O, I/O switching current and on-chip functions (PDL, DLL, level-shifters, etc.).

9) This specification reflects the values published in the appropriate power roadmap document.

10) ILDT is specified for one 16x16-bit HyperTransport™ link operating at 2.0 GT/s.

11) Please refer to erratum 396.

12) Tolerances apply to both VLDT_dc and VLDT_ac conditions.

3.5 bsmmmmrr S ncdd – Fr6 (1207) Power Supply Operating Conditions

Table 26. bsmmmmrr S ncdd DC Operating Conditions for VDD Power Supply

Symbol	Parameter	Units	Min	Typ	Max	Notes
VID_VDD	VID-Requested VDD Supply Level	V	Refer to the thermal/power tables under the appropriate SOPN section for this OPN-specific parameter.			
VDD_dc	DC Tolerance - VDD Supply Voltage	V	VID_VDD –50 mV	VID_VDD	VID_VDD + 50 mV	
VDD_PON	Metal Mask VID_VDD	V	0.95	1.00	MaxVID_VDD	1,2
VDDNB_dc	VDDNB Supply voltage	V	VID_VDDNB –50 mV	VID_VDDNB	VID_VDDNB + 50 mV	
VID_VDDNB	VDDNB Supply voltage	V	Refer to the thermal/power tables under the appropriate SOPN section for this OPN-specific parameter.			
VDDNB_PON	Metal Mask VDDNB	V	0.95	1.00	1.30	2

Notes:

1) After PWROK assertion, the VID signals change from the Metal Mask VID to the value programmed during device manufacturing.

2) MaxVID is reported in MSRC001_0071 (COFVID_STATUS).

Table 27. bsmmmmrr S ncdd AC Operating Conditions for VDD Power Supply

Symbol	Parameter	Units	Min	Typ	Max	Notes
VDD_ac	VDD Supply Voltage	V	VID_VDD –100 mV	VID_VDD	VID_VDD + 100 mV	1
VDDNB_ac	VDDNB Supply Voltage	V	VID_VDDNB –100 mV	VID_VDDNB	VID_VDDNB + 100 mV	1

Notes:

1) The voltage set-point must be contained within the DC specification in order to ensure proper operation. Voltage ripple and transient events outside the DC specification must remain within the AC specification at all times. Transients above dc max must return to within the DC specification within 15 µS and must stay under a triangle described by the AC limit at one end and the DC limit at the other, as shown in Figure 7 on page 94.

Table 28. bsmmmmrr S ncdd Maximum Power-Up and Power-Down Conditions for Power Supplies

Symbol	Parameter	Units	Max
VDDIO	VDDIO Supply Voltage for DDR2 electricals	V	2.05
VDDIO	VDDIO Supply Voltage for DDR3 electricals	V	1.65
VLDT	VLDT Supply Voltage	V	1.32
VDDA	VDDA Supply Voltage	V	2.70
VDD, VDDNB	VDD, VDDNB Supply Voltage	V	Max AC Voltage

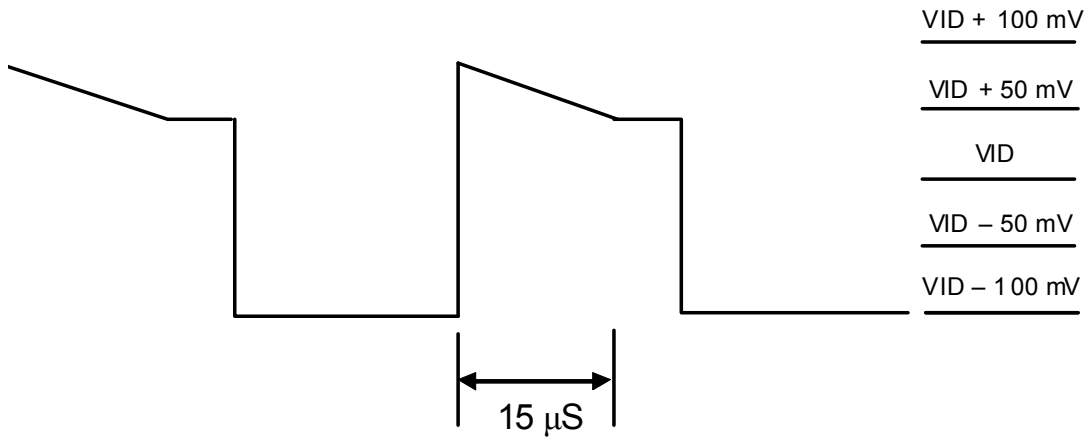

Figure 7. Socket Fr6 (1207) AC and DC Transient Limits

Table 29. bsmmmmrr S ncdd AC and DC Operating Conditions for non-VDD Power Supplies

Symbol	Parameter	Units	Min	Typ	Max	Notes
VDDIO_dc	VDDIO Supply Voltage for DDR2 electricals	V	1.70	1.80	1.90	1
VDDIO_ac	VDDIO Supply voltage	V	VDDIO_dc –150 mV	VDDIO_dc	VDDIO_dc +150 mV	2, 3
VLDT	VLDT Supply Voltage	V	1.14	1.20	1.26	12
VTT_dc	VTT Supply Voltage for DDR2 electricals	V	0.85	0.90	0.95	4
VTT_ac	VTT Supply Voltage	V	VTT_dc –75mV	VTT_dc	VTT_dc + 75mV	2, 3
VDDA	VDDA Supply Voltage	V	2.40	2.50	2.60	
IDDIO1	VDDIO Power Supply Current	A			3.60	7, 9
ITT1	VTT Power Supply Current	A			1.75	6, 8, 9
ILDT	VLDT Power Supply Current	A			1.50/ link	5, 9,11
					0.60/ link	9,10,11
IDDA	VDDA Power Supply Current	mA			250	9

Notes:

1) All voltages are referenced to VSS. In order to ensure proper functionality, DC voltage regulator must be set accordingly to ensure that VDDIO_dc level measured at the VDDIO_FB_H/L pins does not exceed the specified maximum and minimum range. As such, factors such as voltage regulator inaccuracy and IR drop must be carefully considered and compensated for. For example, if the inaccuracy and IR drop amounts to 50 mV, then the voltage regulator setting for VDDIO should not be lower than 1.75 V to avoid violating the VDDIO_dc minimum spec of 1.70 V.

2) VDDIO_ac and VTT_ac parameters are measured over 60 seconds time frame with all data bus bits switching.

3) Power supply A/C measurements use a 20-MHz scope bandwidth limit.

*4) All voltages are referenced to VSS. Voltage regulator for VTT must be set accordingly so that VTT_dc level measured at the processor VTT_SENSE pin tracks 0.5*VDDIO_DC and stays within the specified maximum and minimum range. Factors such as voltage regulator inaccuracy and IR drop must be carefully considered and compensated for. For example, if the inaccuracy and IR drop amounts to 20 mV, the voltage regulator setting must be set 20 mV higher so that VTT still tracks 0.5*VDDIO_dc and stays within the range of 0.85 V and 0.95 V.*

5) ILDT is specified for each Gen3 16x16-bit HyperTransport™ link operating between 2.4 GT/s and 4.8 GT/s.

6) VTT must both sink and source current.

7) VDDIO current is consumed by I, O, I/O switching current and on-chip functions (PDL, DLL, level-shifters, etc.).

8) VTT current is consumed by I, O, I/O switching current and on-chip functions (PDL, DLL, level-shifters, etc.).

9) This specification reflects the values published in the appropriate power roadmap document.

10) ILDT is specified for each unconnected HyperTransport link or for each 16x16-bit Gen1 HyperTransport link operating at max 2.0 GT/s or less.

11) The maximum value is listed as a per link value to allow for a mix of Gen1 and Gen3 links. All links must be powered on a processor. Please refer to errata 396-397.

12) Tolerances apply to both VLDT_dc and VLDT_ac conditions.

4 Power Limit Encoding

IddValue and IddDiv are available for each P-state in P-state registers MSRC001_00[68:64]. For more details, refer to the *BIOS and Kernel Developer's Guide (BKDG) for AMD Family 10h Processors*, order# 31116.

5 MTOPS

Table 30 shows Composite Theoretical Performance (CTP) calculations. The calculations are stated in Millions of Theoretical Operations per Second (MTOPS) and are based upon a formula in the United States Department of Commerce Export Administration Regulations 15 CFR 774 (Advisory Note 4 for Category 4).

All calculations contained herein are subject to change without notice. AMD makes no representation or warranty as to the accuracy or reliability of such calculations.

THESE CALCULATIONS ARE PROVIDED “AS IS” AND AMD MAKES NO WARRANTIES WHATSOEVER, EXPRESS OR IMPLIED, INCLUDING BUT NOT LIMITED TO ANY WARRANTY OF MERCHANTABILITY, NONINFRINGEMENT, FITNESS FOR ANY PARTICULAR PURPOSE OR ANY WARRANTY OTHERWISE ARISING OUT OF AMD PROVIDING OR ANY PARTY'S USE OF THE CALCULATIONS.

Furthermore, AMD shall have no liability for any losses or damages including direct, indirect, special, punitive, incidental, or consequential, such as but not limited to, loss of anticipated profits or other economic loss occurring in connection with use of the calculations, even if AMD has been advised in advance of the possibility of such damages. No license, express or implied, by estoppel or otherwise, to any intellectual property rights is granted herein.

Table 30. Composite Theoretical Performance (CTP) Calculation

Frequency	MTOPS Single-Core	MTOPS Dual-Core	MTOPS Triple-Core	MTOPS Quad-Core	MTOPS Six-Core	MTOPS Eight-Core	MTOPS Twelve-Core
1600	8,667	16,267	23,867	31,467	46,667	61,867	92,267
1700	9,209	17,284	25,359	33,434	49,584	65,734	98,034
1800	9,750	18,300	26,850	35,400	52,500	69,600	103,800
1900	10,292	19,317	28,342	37,367	55,417	73,467	109,567
2000	10,834	20,334	29,834	39,334	58,334	77,334	115,334
2100	11,375	21,350	31,325	41,300	61,250	81,200	121,100
2200	11,917	22,367	32,817	43,267	64,167	85,067	126,867
2300	12,459	23,384	34,309	45,234	67,084	88,934	132,634
2400	13,000	24,400	35,800	47,200	70,000	92,800	138,400
2500	13,542	25,417	37,292	49,167	72,917	96,667	144,167
2600	14,084	26,434	38,784	51,134	75,834	100,534	149,934
2700	14,625	27,450	40,275	53,100	78,750	104,400	155,700
2800	15,167	28,467	41,767	55,067	81,667	108,267	161,467
2900	15,709	29,484	43,259	57,034	84,584	112,134	167,234
3000	16,250	30,500	44,750	59,000	87,500	116,000	173,000
3100	16,792	31,517	46,242	60,967	90,417	119,867	178,767
3200	17,334	32,534	47,734	62,934	93,334	123,734	184,534
3300	17,875	33,550	49,225	64,900	96,250	127,600	190,300
3400	18,417	34,567	50,717	66,867	99,167	131,467	196,067

6 APP

Table 31 shows the Adjusted Peak Performance (APP) calculations for the AMD Opteron™ processor. The calculations are stated in millions of Weighted Teraflops (WT) and are based upon a formula in the United States Department of Commerce Export Administration Regulations 15 CFR 774 (Advisory Note 4 for Category 4).

All calculations contained herein are subject to change without notice. AMD makes no representation or warranty as to the accuracy or reliability of such calculations.

THESE CALCULATIONS ARE PROVIDED “AS IS” AND AMD MAKES NO WARRANTIES WHATSOEVER, EXPRESS OR IMPLIED, INCLUDING BUT NOT LIMITED TO ANY WARRANTY OF MERCHANTABILITY, NONINFRINGEMENT, FITNESS FOR ANY PARTICULAR PURPOSE OR ANY WARRANTY OTHERWISE ARISING OUT OF AMD PROVIDING OR ANY PARTY'S USE OF THE CALCULATIONS.

Furthermore, AMD shall have no liability for any losses or damages including direct, indirect, special, punitive, incidental, or consequential, such as but not limited to, loss of anticipated profits or other economic loss occurring in connection with use of the Calculations, even if AMD has been advised in advance of the possibility of such damages. No license, express or implied, by estoppel or otherwise, to any intellectual property rights is granted herein.

Table 31. Adjusted Peak Performance (APP) Calculation

Frequency	APP Single-Core	APP Dual-Core	APP Triple-Core	APP Quad-Core	APP Six-Core	APP Eight-Core	APP Twelve-Core
1600	0.0019	0.0038	0.0058	0.0077	0.0115	0.0154	0.0230
1700	0.0020	0.0041	0.0061	0.0082	0.0122	0.0163	0.0245
1800	0.0022	0.0043	0.0065	0.0086	0.0130	0.0173	0.0259
1900	0.0023	0.0046	0.0068	0.0091	0.0137	0.0182	0.0274
2000	0.0024	0.0048	0.0072	0.0096	0.0144	0.0192	0.0288
2100	0.0025	0.0050	0.0076	0.0101	0.0151	0.0202	0.0302
2200	0.0026	0.0053	0.0079	0.0106	0.0158	0.0211	0.0317
2300	0.0028	0.0055	0.0083	0.0110	0.0166	0.0221	0.0331
2400	0.0029	0.0058	0.0086	0.0115	0.0173	0.0230	0.0346
2500	0.0030	0.0060	0.0090	0.0120	0.0180	0.0240	0.0360
2600	0.0031	0.0062	0.0094	0.0125	0.0187	0.0250	0.0374
2700	0.0032	0.0065	0.0097	0.0130	0.0194	0.0259	0.0389
2800	0.0034	0.0067	0.0101	0.0134	0.0202	0.0269	0.0403
2900	0.0035	0.0070	0.0104	0.0139	0.0209	0.0278	0.0418
3000	0.0036	0.0072	0.0108	0.0144	0.0216	0.0288	0.0432
3100	0.0037	0.0074	0.0112	0.0149	0.0223	0.0298	0.0446
3200	0.0038	0.0077	0.0115	0.0154	0.0230	0.0307	0.0461
3300	0.0040	0.0079	0.0119	0.0158	0.0238	0.0317	0.0475
3400	0.0041	0.0082	0.0122	0.0163	0.0245	0.0326	0.0490