Copyright FCI.

FCIconnect.com

PRODUCT NUMBER
20020008-XXXXXXXLF

20020008- □ □ □ □ □ □ □ L F

LF: DENOTED RoHS COMPATIBLE

1 : STANDARD PRODUCT W/ BOX PACKING

PITCH

C: 3.50 mm
D: 3.81 mm
G: 5.00 mm
H: 5.08 mm

POLES

02: 2 POLES
03: 3 POLES
04: 4 POLES
|
|
|
24: 24 POLES

PRINTING CODE	POSITION	MARKING
0	NONE	NONE
3	SIDE	4,3,2,1
5	SIDE	....C,B,A,-,+

HOUSING CODE

CODE	COLOR	AVAILABILTY
1	GREEN(RAL 6018/T)	STANDARD
2	BLACK	ON REQUEST ONLY
3	GREY(RAL 7004/P)	ON REQUEST ONLY
4	BLUE(RAL 5015/A)	ON REQUEST ONLY
5	YELLOW	ON REQUEST ONLY

SCREW CODE

CODE	SCREW TYPE		AVAILABILTY
A	-/+		ON REQUEST ONLY
B	-		STANDARD

PROPERTY TABLE

FCI SERIES NAME		02-350	02-381	02-500	02-508
PITCH (mm)		3.50	3.81	5.00	5.08
VOLTAGE RATING (VAC)		300	300	300	300
CURRENT RATING (A)	cULus	8	8	12	12
	VDE	10	10	NA	NA
APPLICABLE WIRE RANGE (AWG)	1-WIRE	16~28	16~28	12~24	12~24
	2-WIRE	20	20	18	18
WIRE CROSS SECTION (mm^2)	SOLID 1-WIRE	1.5	1.5	2.5	2.5
	SOLID 2-WIRE	0.5	0.5	1.0	1.0
	STRANDED 1-WIRE	1.5	1.5	2.5	2.5
	STRANDED 2-WIRE	0.75	0.75	1.5	1.5
OPENING CONTACT HOUSING(mm^2)		2.8x1.7	2.8x1.7	2.6x3.2	2.6x3.2
WIRE STRIP LENGTH(mm)		6~7	6~7	6~7	6~7
TORQUE +/-10% (N-m/Lb-in)		0.19/1.7	0.19/1.7	0.4/3.5	0.4/3.5
SCREW		M2x0.4	M2x0.4	M3x0.5	M3x0.5
WITHSTANDING VOLTAGE (kV)	cULus	1.6	1.6	1.6	1.6
	VDE	2.5	2.5	NA	NA
OPERATING TEMP. (℃)		-40~+115	-40~+115	-40~+115	-40~+115
POLES AVAILABLE		02~24	02~24	02~24	02~24
SAFETY CERTIFICATE		cULus VDE		cULus	

NOTES:
1. MATERIALS
   1-1 HOUSING: THERMALPLASTIC RESIN, UL 94V-0 RATED,
   1-2 SCREW: STEEL, ZINC PLATED.
   1-3 CLAMP: COPPER ALLOY, NICKEL PLATED.
   1-4 TERMINAL: COPPER ALLOY, TIN PLATED.
2. PRODUCT SPECIFICATION REFER TO FCI GS-12-625.
3. PRODUCT PACKING SPECIFICATION REFER TO FCI GS-14-1394.
4. FCI, SAFETY CERTIFICATE LOGO AND SERIES NAME TO BE SHOWN ON PRODUCT SURFACE.
5. THE PRODUCTS WHERE THE PART NUMBER END IN "LF" MEET THE EUROPEAN UNION DIRECTIVE AND OTHER COUNTRY REGULATIONS AS DESCRIBED IN GS-22-008.

mat'l. code	surface ASME Y14.5	tolerance ASME Y14.5	projection	product family
	tolerances unless otherwise specified			TERMINAL BLOCK

ltr	ecn no	dr	date
D	T10-0042	WL	030310
E	T10-0082	WL	080510
F	T10-0172	WL	102010
G	T11-0013	WL	040811
H	T-004746	WL	072011
J	T-012872	LS	091912

angles X°±1° | linear X.±0.5[.020] | X.X±0.3[.012] | X.XX±0.1[.004]

MM [INCH]

dr	BEER FU	062509
engr	BEER FU	062509
chr	GARY HSIEH	062509
appd	JOSEPH HSIA	062509

title: TERMINAL BLOCK
Pluggable plug, hook entry side

dwg no 20020008 | sheet 1 of 5 | size A4

type CUSTOMER Drawing

sheet index	1	2	3	4	5
revision	J	J	J	J	J

form: A4mmXLc

PDS: Rev :J STATUS:Released Printed: Sep 19, 2012

Copyright FCI.

FCIconnect.com

PRODUCT NUMBER	SERIES NAME	PITCH
20020008-CXXXXXXLF	02-350	3.50 mm

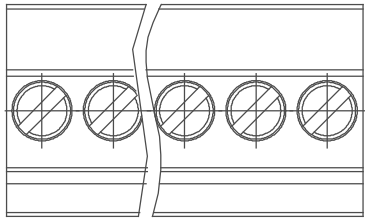

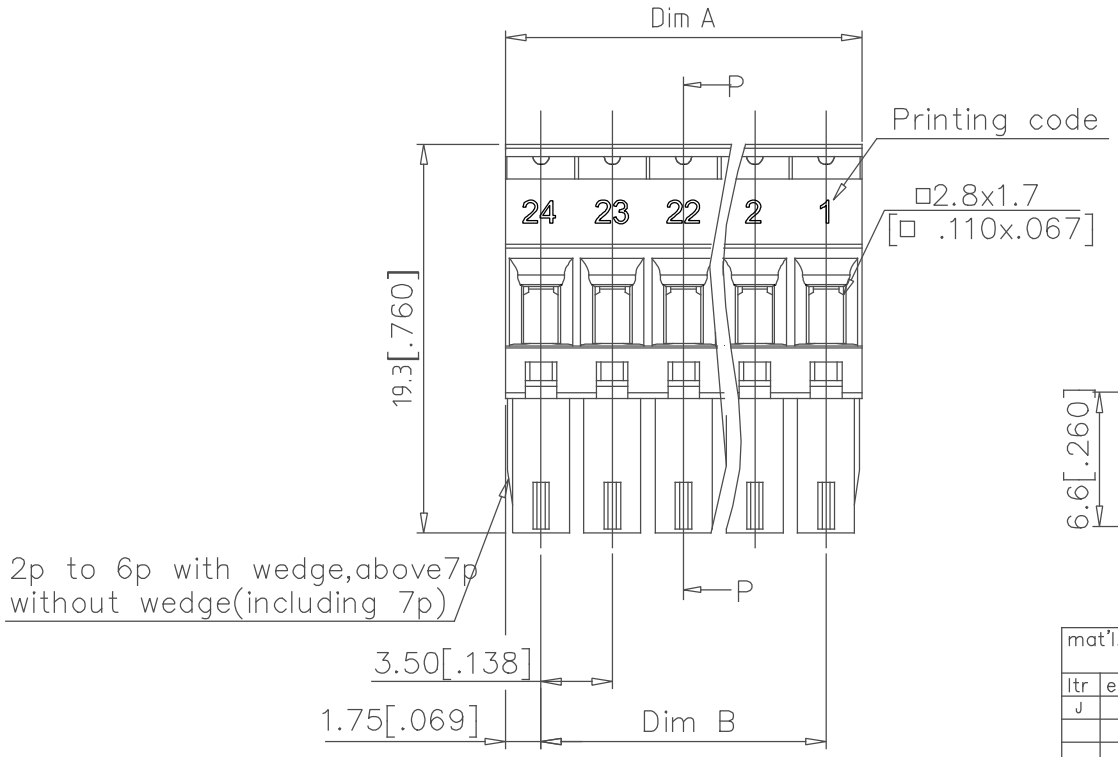

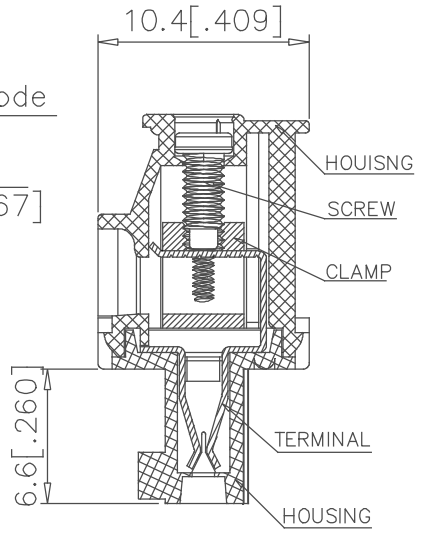

SECTION P-P

N= NUMBER OF POLES
DIMENSION

Dim A	N*3.5[.138]
Bim B	(N-1)X3.5[.138]

Poles	Tolerance
2P-6P	±0.15[.006]
7P-12P	±0.20[.008]
13P-18P	±0.25[.010]
19P-24P	±0.30[.012]

| | | |

Copyright FCI.

FCIconnect.com

PRODUCT NUMBER	SERIES NAME	PITCH
20020008-DXXXXXXLF	02-381	3.81 mm

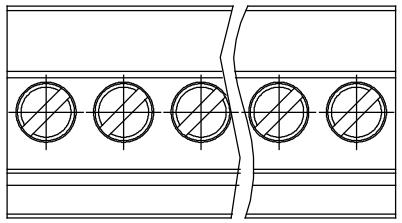

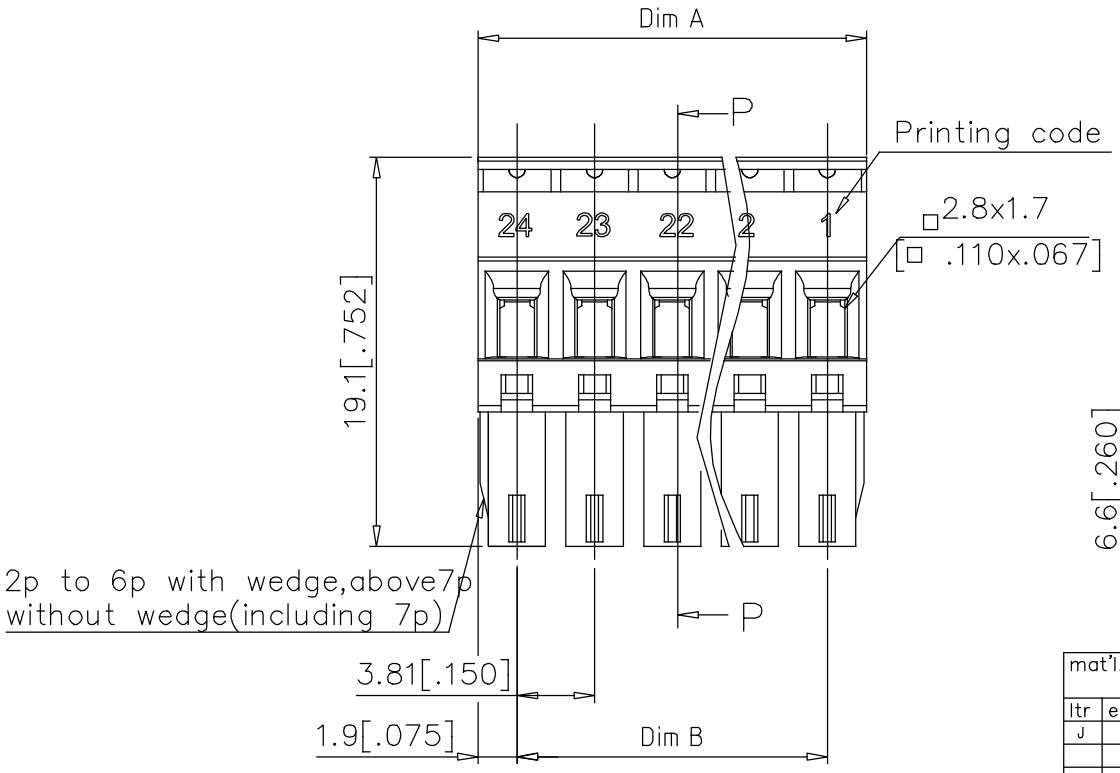

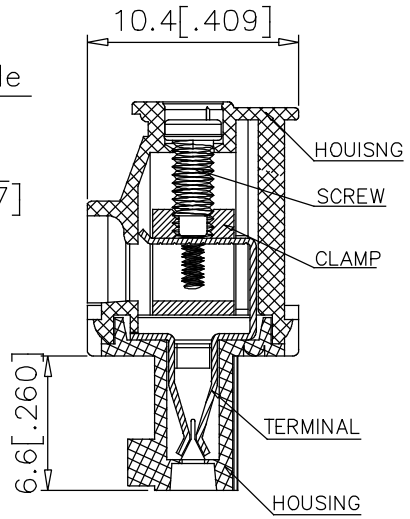

SECTION P-P

N= NUMBER OF POLES
DIMENSION

Dim A	N*3.81[.150]
Bim B	(N-1)X3.81[.150]

Poles	Tolerance
2P-6P	±0.15[.006]
7P-12P	±0.20[.008]
13P-18P	±0.25[.010]
19P-24P	±0.30[.012]

ltr	ecn no	dr	date
J			

mat'l. code

surface ASME Y14.5 | tolerance ASME Y14.5 | projection

tolerances unless otherwise specified

angles | linear: X. ±0.5[.020] / X.X ±0.3[.012] / X.XX ±0.1[.004] | X°±1°

MM [INCH]

scale

dr	BEER FU	062509
engr	BEER FU	062509
chr	GARY HSIEH	062509
appd	JOSEPH HSIA	062509

product family: TERMINAL BLOCK

title: TERMINAL BLOCK
PLUGABLE, PLUG, SIGNAL, ENTRYSIDE HOOK

dwg no 20020008 | sheet 3 of 5 | size A4

type: CUSTOMER Drawing

sheet index | revision sheet

form: A4mmXLc

PDS: Rev :J STATUS:Released Printed: Sep 19, 2012

Copyright FCI.

FCIconnect.com

PRODUCT NUMBER	SERIES NAME	PITCH
20020008-GXXXXXXLF	02-500	5.00 mm

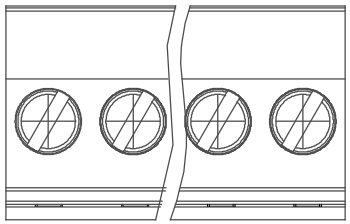

N= NUMBER OF POLES
DIMENSION

Dim A	Nx5.0[.197]
Bim B	(N-1)x5.0[.197]

Poles	Tolerance
2P-6P	±0.15[.006]
7P-12P	±0.25[.010]
13P-18P	±0.30[.012]
19P-24P	±0.40[.016]

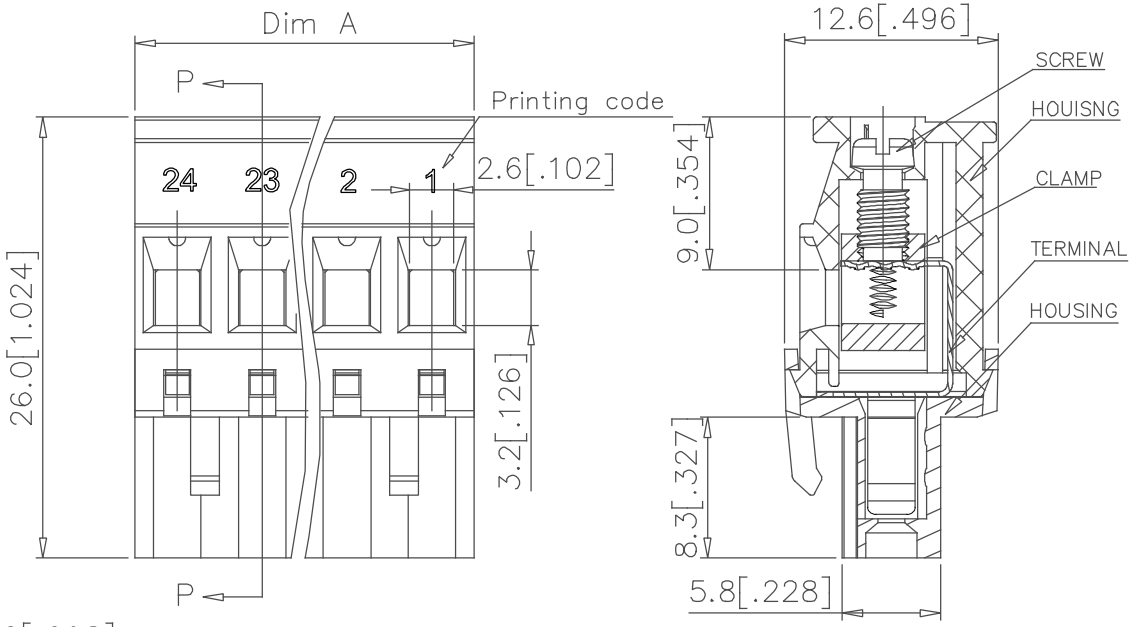

SECTION P-P

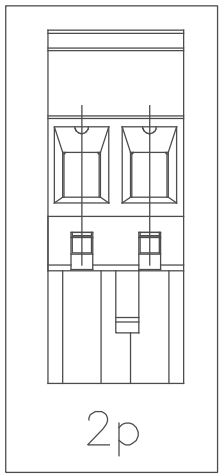

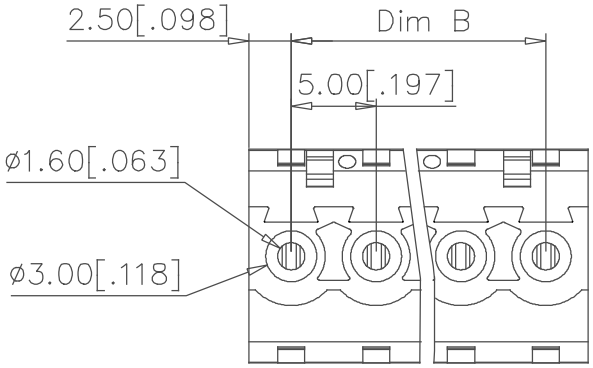

mat'l. code				surface ASME Y14.5	tolerance ASME Y14.5	projection	product family TERMINAL BLOCK
ltr	ecn no	dr	date	tolerances unless otherwise specified			title
J				angles	linear X. ±0.5[.020]	MM [INCH]	TERMINAL BLOCK PLUGABLE, PLUG, SIGNAL, ENTRYSIDE HOOK
				X°±1°	X.X ±0.3[.012]		
					X.XX ±0.1[.004]	scale	
				dr	BEER FU 062509		dwg no 20020008 sheet 4 of 5 size A4
				engr	BEER FU 062509		
				chr	GARY HSIEH 062509		type CUSTOMER Drawing
				appd	JOSEPH HSIA 062509		
sheet index	revision sheet						

form: A4mmXLc

PDS: Rev :J STATUS:Released Printed: Sep 19, 2012

Copyright FCI.

FCIconnect.com

PRODUCT NUMBER	SERIES NAME	PITCH
20020008-HXXXXXXLF	02-508	5.08 mm

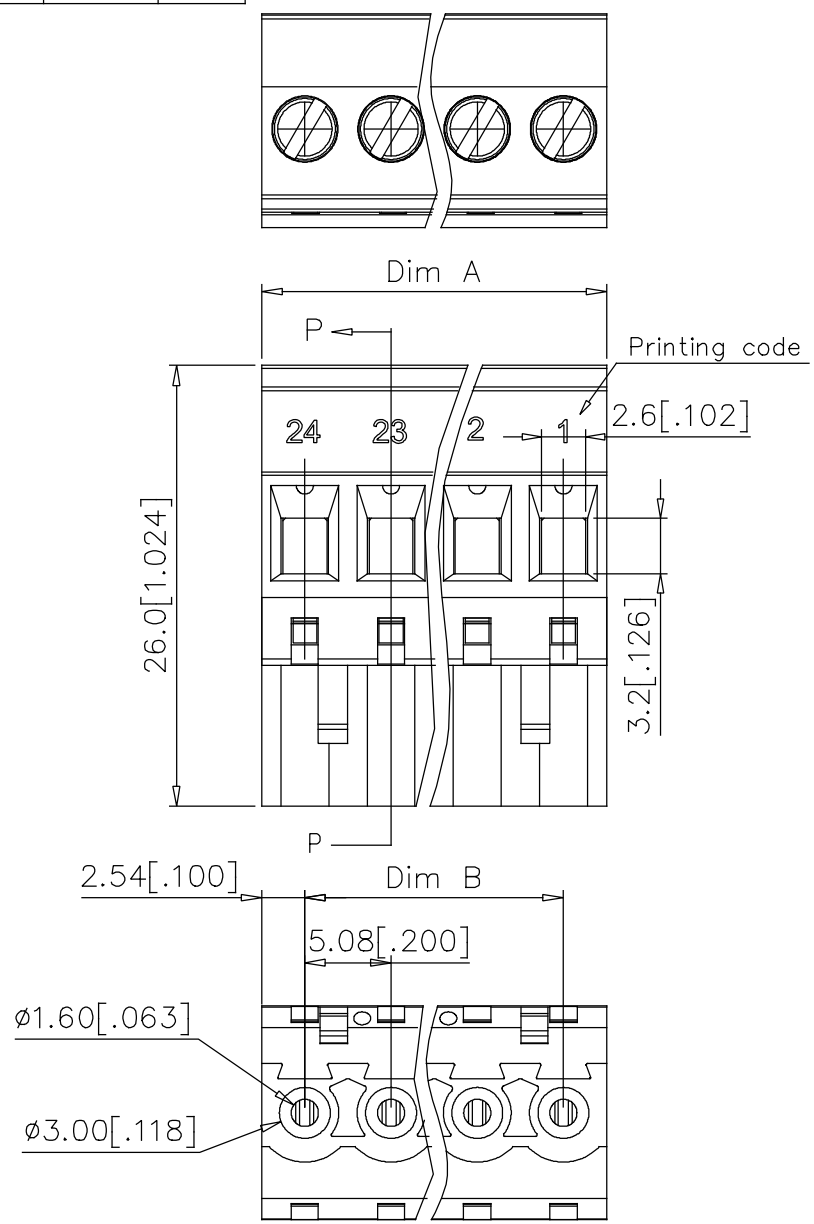

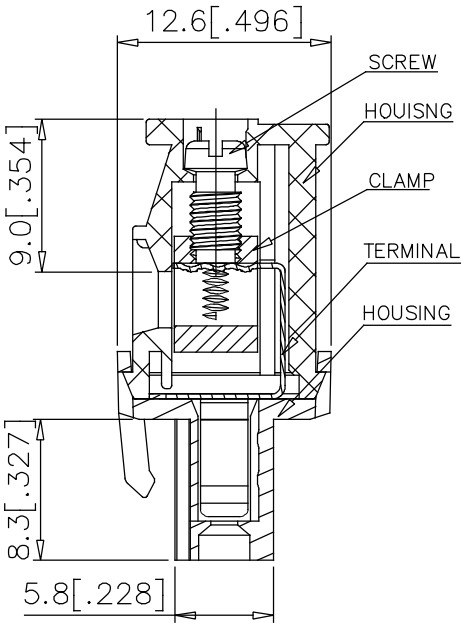

SECTION P-P

N= NUMBER OF POLES
DIMENSION

Dim A	Nx5.08[.200]
Bim B	(N-1)x5.08[.200]

Poles	Tolerance
2P-6P	±0.15[.006]
7P-12P	±0.25[.010]
13P-18P	±0.30[.012]
19P-24P	±0.40[.016]

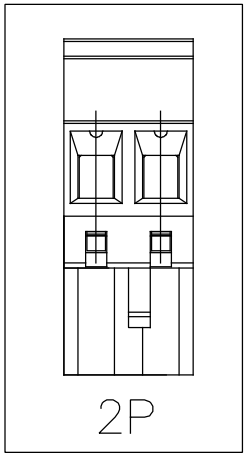

mat'l. code				surface ASME Y14.5	tolerance ASME Y14.5	projection	product family TERMINAL BLOCK
ltr	ecn no	dr	date	tolerances unless otherwise specified			title
J				angles	linear X. ±0.5[.020]	MM [INCH]	TERMINAL BLOCK PLUGABLE, PLUG, SIGNAL, ENTRYSIDE HOOK
					X.X ±0.3[.012]		
				X°±1°	X.XX ±0.1[.004]	scale	
				dr	BEER FU	062509	dwg no 20020008 sheet 5 of 5 size A4
				engr	BEER FU	062509	
				chr	GARY HSIEH	062509	
				appd	JOSEPH HSIA	062509	type CUSTOMER Drawing
sheet index	revision sheet						

form: A4mmXLc