NOTES:

1. MATERIALS AND FINISHES:
   BODY - BRASS, NICKEL PLATED
   CONTACT - BeCu, GOLD PLATED
   INSULATOR - PTFE
   HEX NUT - BRASS, NICKEL PLATED
   LOCK WASHER - STAINLESS STEEL, PASSIVATED

2. ELECTRICAL:
   A. IMPEDANCE: 75 OHM
   B. FREQUENCY RANGE: DC - 12 GHz
   C. RETURN LOSS: -25 dB MIN @ DC - 6 GHz
   -20 dB MIN @ 6 - 12 GHz
   D. DIELECTRIC WITHSTANDING VOLTAGE: 1500 VRMS MIN.

3. MECHANICAL:
   A. DURABILITY: 500 CYCLES MIN.
   B. TEMPERATURE RANGE: -65 C TO 165 C

4. PACKAGING:
   A. QUANTITY: SINGLE PACK
   B. MARKING: BAG TO BE MARKED
   "AMPHENOL RF, AD-BNCJMCXJ-12G & DATE CODE"

THIRD ANGLE PROJ.

REVISIONS				
REV	DESCRIPTION	DATE	ECN	APPR
A	RELEASE TO MFG.	11-Dec-19	13901	SV

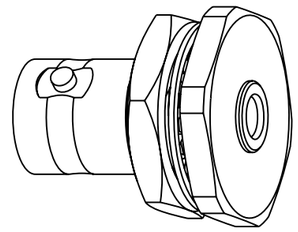

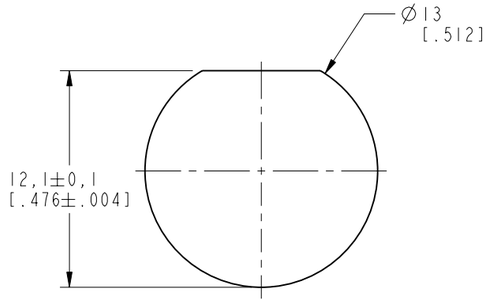

RECOMMENDED PCB PANEL CUTOUT

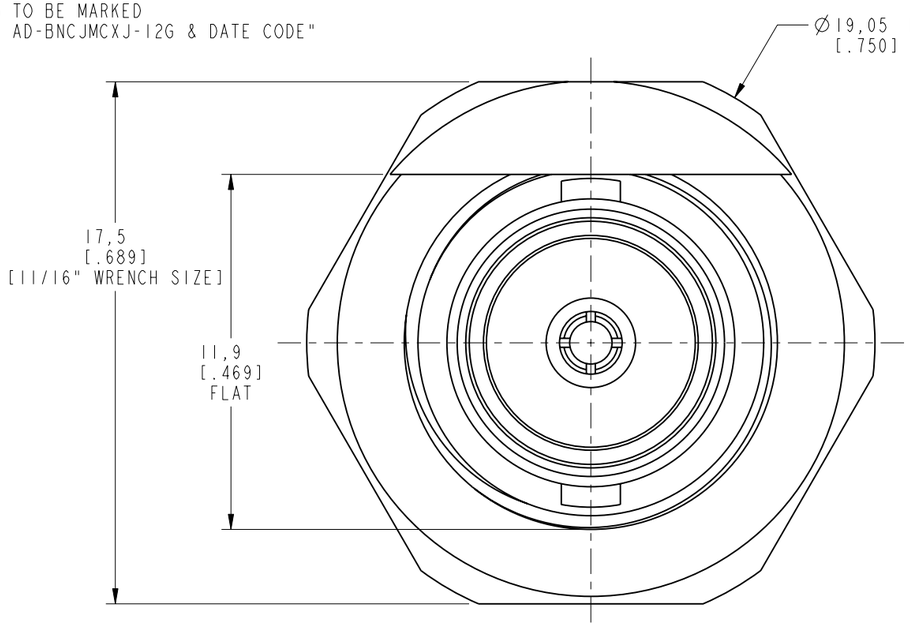

LOCK WASHER & HEX NUT NOT SHOWN FOR CLARITY

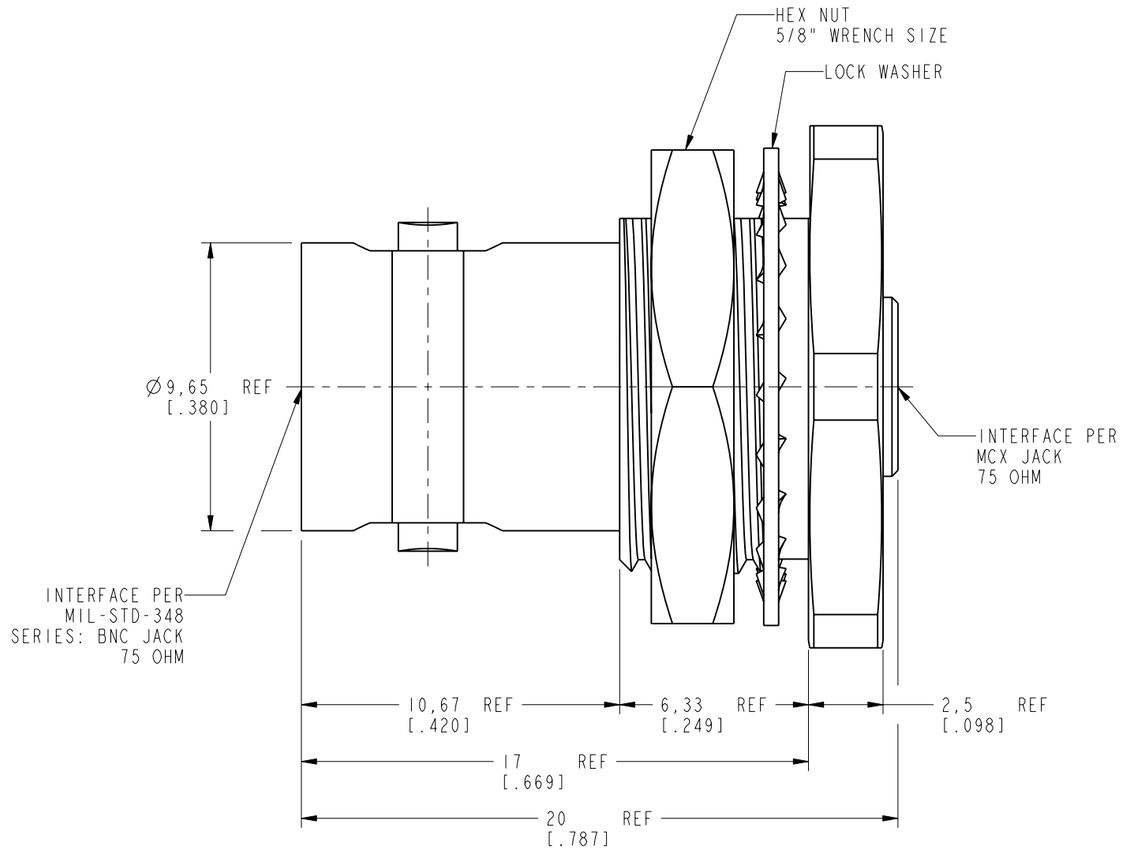

CUSTOMER OUTLINE DRAWING

ALL OTHER SHEETS ARE FOR INTERNAL USE ONLY

UNLESS OTHERWISE SPECIFIED, DIMENSIONS ARE IN METRIC AND TOLERANCES ARE:				
<0.5mm	0.5 - 6mm	6 - 30mm	30 - 120mm	ANGLES
± 0.05mm	±0.1mm	±0.2mm	± 0.3mm	±1°

NOTICE - These drawings, specifications, or other data (1) are, and remain the property of Amphenol corp. (2) must be returned upon request; and (3) are confidential and not to be disclosed to any person other than those to whom they are given by Amphenol Corp. the furnishing of these drawings, specifications, or other data by Amphenol Corp., or to any other person to anyone for any purpose is not to be regarded by implication or otherwise in any manner licensing, granting rights to permitting such holder or any other person to manufacture, use or sell any product, process or design, patented or otherwise, that may in any way be related to or disclosed by said drawings, specifications, or other data.

MATERIAL	SEE NOTES
REFERENCE	
EAR#	9410
REF:	31-70516
CONFIGURATION LEVEL:	In Work
FINISH	

DRAWN	E.WU	DATE 11-Dec-19
ENGINEER	STAR	DATE 17-Dec-19
APPROVED	S.HSIEH	DATE 17-Dec-19
CAD FILE		

TITLE
BNC BULKHEAD JACK
TO MCX JACK ADAPTER

SCALE: 5.0:1.0 | SHEET 2 OF 2

DWG SIZE	REV
B	A

Amphenol RF
www.amphenolrf.com

DRAWING NO.	AD-BNCJMCXJ-12G
ITEM NO.	AD-BNCJMCXJ-12G
PART NO.	AD-BNCJMCXJ-12G