GE
Measurement & Control Solutions

Telaire T6615 Sensor Dual Channel Module

Compact CO_2 Module Designed to Integrate Into Existing Controls and Equipment

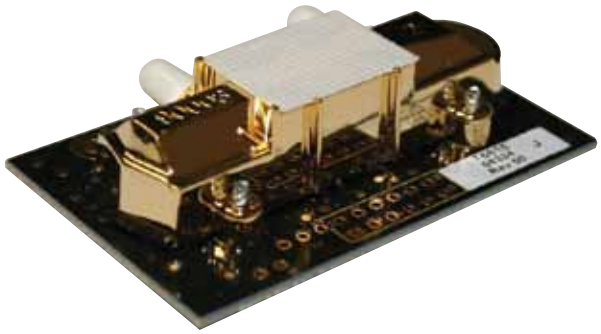

The Telaire® T6615 dual-channel CO_2 Module is designed to meet the volume, cost, and delivery expectations of Original Equipment Manufacturers (OEMs).

Features

- An affordable gas sensing solution for OEMs.
- A reliable sensor design based on 15 years of engineering and manufacturing expertise.
- Flexible CO_2 sensor platform designed to interact with other microprocessor devices.
- Dual-channel optical system and three-point calibration process for enhanced stability, accuracy and reliability.
- Designed for applications where ABC Logic cannot be used
- Sensor may be field calibrated

Telaire T6615 Sensor Module Specifications

Method
Dual-channel Non Dispersive Infrared (NDIR), gold plated optics, diffusion or flow through sampling.

Measurement Range
0 to 2000 ppm
0 to 5000 ppm
0 to 10,000 ppm
0 to 50,000 ppm

Dimensions
2.25 in X 1.365 in X 0.60 in
(57.15 mm X 34.67 mm X 15.24 mm)

Accuracy*
75 ppm or 10% of reading (whichever is greater)

Temperature Dependence
0.2% FS per °C

Stability over Life of Sensor (10 Years)
< 5% of FS or <10% reading annual

Pressure Dependence
0.135% of reading per mm Hg

Response Time
< 2 minutes for 90% step change typical

Warm Up Time
- < 2 minutes (operational)
- 10 minutes (maximum accuracy)

Operating Conditions
- 32°F to 122°F (0°C to 50°C)
- 0 to 95% RH, non condensing

Storage Conditions
-40°F to 158°F (-40°C to 60°C)

(Non Condensating)

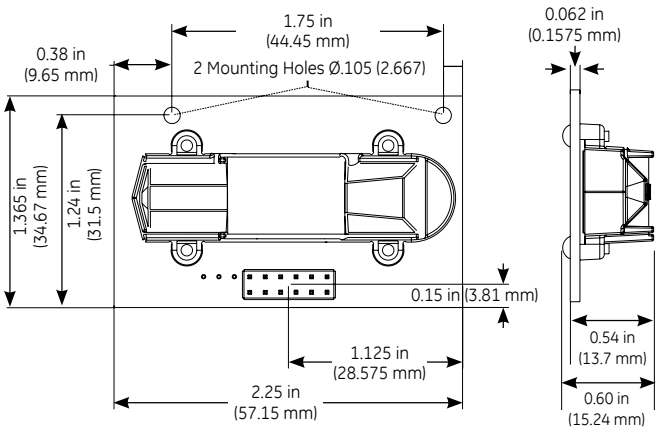

Output

Digital
UART @ 19200 Baud (Please call for detailed product specifications).
I^2C slave up to 100 kHz

Analog
0 to 4 VDC

Power Supply Requirements
5 VDC regulated (±5%)

Power Consumption
- 0.90 watts peak
- 0.165 watts average

Interface Connections
Designed for 12 pin male header with 0.1 in (2.54 mm) spacing. Header not included.

Flow Rates (Via Flow Ports)
Flow through version: 50 cc/min maximum
Diffusion version: 80 - 120 cc/min

Warranty Terms
12 months

* Handling and OEM assembly may affect factory calibration.

Sensor Accuracy and Field Calibration

The T6615 is a dual channel sensor. The two channels can be described as a CO_2 channel that measures gas concentration and a reference channel that measures the sensor signal intensity. The T6615 performs periodic self-calibrations using the reference channel. The self calibrations are approximately every 24 hours but can also be initiated by sending a command (see communication protocol). Self calibrations should not be performed during the warm-up period. During the self calibration the sensor PPM reading is frozen, it will not react to changing CO_2. The calibration time is adjustable but nominally two minutes.

Over time the minor electrical and mechanical changes can affect the sensor accuracy. With the exception of operation in harsh environments the rate of signal change is a decaying function, thus the longer the sensor operates the more stable it will become. The reference channel will correct for these changes over time. GE recommends periodic gas calibration depending on the application accuracy requirements. While the reference channel corrects for changes over time, a field calibration using nitrogen gas will immediately restore the highest level of accuracy.

Pin Designations

Connector Pinout	Function
A	TX (UART)
B	RX (UART)
C	V+ (5 VDC)
1	V+ (5 VDC)
2	GND
3	GND
4	AV OUT (0 to 4 VDC)
5	I^2C SCL
6	No Connect
7	I^2C SDA
8	No Connect
9	No Connect
10	TX (UART)
11	RX (UART)
12	GND

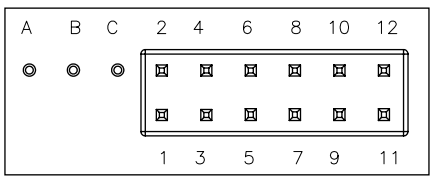

Module T6615-F (Flow Through)

The diffusion membrane is replaced with a non-permeable seal. The two flow ports can be used for flow through sampling. Flow rate of 50 cc/min recommended.

Handling and Installation

The T6615 CO_2 OEM modules are infrared gas sensors on a printed circuit board and should be treated carefully. Precautions should be taken to observe specified limits and prevent damage from electrostatic discharge or rough handling. Please refer to ANSI/ESD S20. 20-1999 for more information on preventing ESD damage and IPC 610 Rev D for more information on proper electronic assembly practices.

Available Models

Part Number	Sampling Method	Measurement Range
T6615	Diffusion	0-2,000 ppm
T6615-5K	Diffusion	0-5,000 ppm
T6615-10K	Diffusion	0-10,000 ppm
T6615-50K	Diffusion	0-50,000 ppm
T6615-F	Flow Through	0-2,000 ppm
T6615-5KF	Flow-through	0-5,000 ppm
T6615-10KF	Flow-through	0-10,000 ppm
T6615-50KF	Flow-through	0-50,000 ppm
T6615-R12	Diffusion, 12 second rate	0-2,000 ppm



www.ge-mcs.com

920-474C

© 2011 General Electric Company. All Rights Reserved. Specifications are subject to change without notice. GE is a registered trademark of General Electric Company. Other company or product names mentioned in this document may be trademarks or registered trademarks of their respective companies, which are not affiliated with GE.