D-DF

D-Sub connectors - Screw-machined Contacts

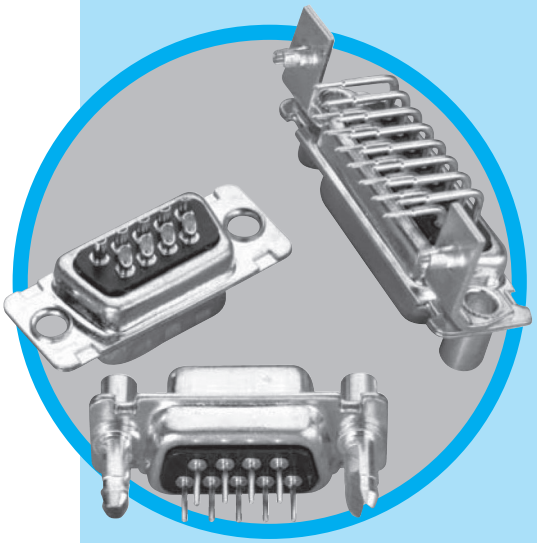

FIXED MACHINED CONTACT CONNECTOR

CHARACTERISTICS

Specifications

• Connectors according to MIL C24308 - NFC93425-HE5

Materials and Platings	
Shells	Steel tinned with dimples on plug connector
Insulator	Glass-filled thermoplastic, UL 94V-0
Rear insert	Brass, 3µm up to 5µm (118µ"up to 197µ") tinned over nickel 2µm up to 3µm (78µ" up to 118µ")
Boardlock	Tin plating 4µm up to 6µm (157µ" up to 236µ") over nickel 2µm up to 3µm (78µ" up to 118µ")
Screwlock	Brass, 6µm up to 10µm (236µ" up to 394µ") tinned over nickel 2µm up to 3µm (78µ" up to 118µ")
Contacts	**D:** brass **DF:** pin = brass socket = copper alloy **Right angle version:** full gold plating over 2µm to 3µm nickel **Straight version:** full gold plating over 2µm up to 3µm (78µ" up to 118µ") nickel

Electrical Data	
Current rating	7.5A
Voltage rating	300V AC/rms 50Hz
Withstanding voltage	1000V AC/rms 50Hz for one minute
Insulation resistance	5000MΩ
Contact resistance	**D:** 8.5mΩ max **DF:** 5mΩ max

Climatic Data	
Operating temperature	**D / DF:** -55°C to + 125°C
Salt spray	48 hours
Humidity	**D:** 21 days (40°C - 95% HR) **DF:** 56 days (40°C - 95% HR)

Mechanical Data

Mating and unmating force

Unit: kg (lb)

No. of Cts	Mate (max)	Unmate (min)
9 (size E)	3.05 (6.74)	0.36 (0.79)
15 (size A)	5.09 (11.24)	0.46 (1.01)
25 (size B)	8.44 (18.66)	0.81 (1.8)
37 (size C)	12.51 (27.65)	1.1 (2.47)
50 (size D)	14.65 (32.38)	1.6 (3.56)

DESCRIPTION

Amphenol's 17D and 17DF series fixed contact D-Subminiature connector is suitable for industrial or telecom use.

The machined contact provide stability and reliability.

This series offers the broadest range of termination options in the Amphenol line.

Connectors for industrial and telecom use

APPLICATIONS

- Medical
- Industrial
- Telecom
- Any industry standard I / O connections

Amphenol RoHS Compliant EU 2002/95/EC

Amphenol

Shell size dimensions

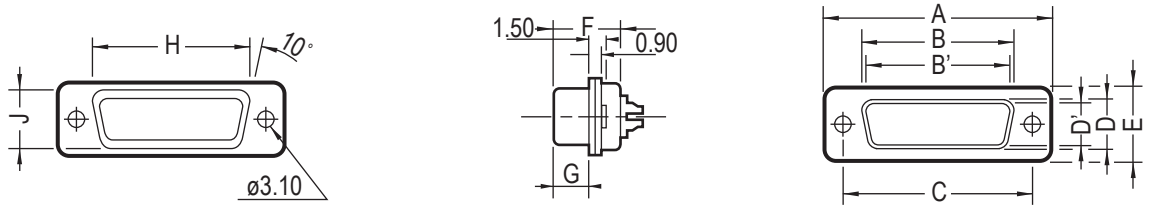

Shell size	Contact P: Pin S: Socket	A ±0.25 (±.010)	B 0/-0.20 (0/-.008)	B' +0.20/0 (+.008/0)	C ±0.10 (±.004)	D 0/-0.25 (0/-.010)	D' +0.25/0 (+.010/0)	E ±0.20 (±.008)	F +0.05/-0.20 (+.002/-.008)	F' +0.10/-0.20 (+.004/-.008)	G +0.10/-0.20 (+.004/-.008)	G' ±0.10 (±.004)	H +0.10/-0.40 (+.004/-.016)	J 0/-0.50 (0/-.020)
E	P	30.7 (1.209")		16.8 (.661")	25.0 (.984")		8.2 (.323")	12.4 (.488")		10.9 (.429")		5.9 (.232")	19.4 (.764")	11.0 (.433")
	S		16.4 (.646")			8.0 (.315")			11.1 (.437")		6.2 (.244")			
A	P	39.0 (1.535")		25.1 (.988")	33.3 (1.311")		8.2 (.323")	12.4 (.488")		10.9 (.429")		5.9 (.232")	27.7 (1.091")	11.0 (.433")
	S		24.8 (.976")			8.0 (.315")			11.1 (.437")		6.2 (.244")			
B	P	52.9 (2.083")		38.8 (1.528")	47.0 (1.850")		8.2 (.323")	12.4 (.488")		11.0 (.433")		5.8 (.228")	41.4 (1.630")	11.0 (.433")
	S		38.5 (1.513")			8.0 (.315")			11.1 (.437")		6.2 (.244")			
C	P	69.2 (2.724")		55.3 (2.177")	63.5 (2.500")		8.2 (.323")	12.4 (.488")		11.0 (.433")		5.8 (.228")	57.9 (2.280")	11.0 (.433")
	S		54.9 (2.161")			8.0 (.315")			11.1 (.437")		6.2 (.244")			
D	P	66.8 (2.630")		52.7 (2.075")	61.1 (2.406")		11.0 (.433")	15.2 (.598")		11.0 (.433")		5.8 (.228")	55.5 (2.185")	13.8 (.543")
	S		52.5 (2.067")			10.9 (.429")			11.1 (.437")		6.2 (.244")			

Panel cutouts

Optimal cutout for rear mounting

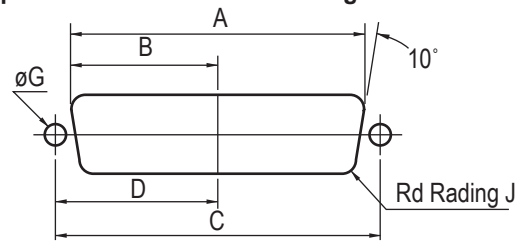

Standard cutout

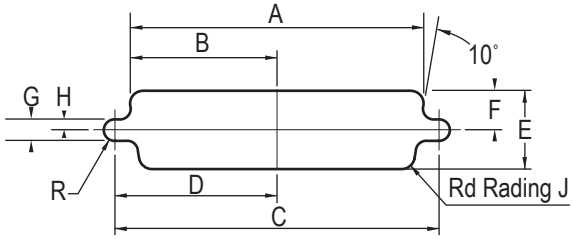

Shell size	Mounting method	A ±0.20 (±.008)	B ±0.20 (±.008)	C ±0.20 (±.008)	D ±0.20 (±.008)	E ±0.20 (±.008)	F ±0.20 (±.008)	G ±0.20 (±.008)	H ±0.20 (±.008)	J ±0.20 (±.008)
E	Front	22.2 (.874")	11.1 (.437")	25.0 (.984")	12.5 (.492")	13.0 (.512")	6.5 (.256")	3.0 (.118")	1.5 (.059")	2.1 (.083")
	Rear	20.5 (.807")	10.2 (.402")			11.4 (.449")	5.7 (.224")			3.4 (.0134")
A	Front	30.5 (1.201")	15.3 (.602")	33.3 (1.311")	16.7 (.657")	13.0 (.512")	6.5 (.256")	3.0 (.118")	1.5 (.059")	2.1 (.083")
	Rear	28.8 (1.134")	14.4 (.567")			11.4 (.449")	5.7 (.224")			3.4 (.0134")
B	Front	44.3 (1.744")	22.1 (.870")	47.0 (1.850")	23.5 (.925")	13.0 (.512")	6.5 (.256")	3.0 (.118")	1.5 (.059")	2.1 (.083")
	Rear	42.5 (1.673")	21.3 (.839")			11.4 (.449")	5.7 (.224")			3.4 (.0134")
C	Front	60.7 (2.390")	30.4 (1.197")	63.5 (2.500")	31.7 (1.248")	13.0 (.512")	6.5 (.256")	3.0 (.118")	1.5 (.059")	2.1 (.083")
	Rear	59.1 (2.327")	29.5 (1.161")			11.4 (.449")	5.7 (.224")			3.4 (.0134")
D	Front	58.3 (2.295")	29.2 (1.150")	61.1 (2.406")	30.6 (1.205")	15.8 (.622")	7.9 (.311")	3.0 (.118")	1.5 (.059")	2.1 (.083")
	Rear	56.3 (2.217")	28.2 (1.110")			14.1 (.555")	7.1 (.280")			3.4 (.0134")

Termination

Right angle

MIL Footprint

without bracket:

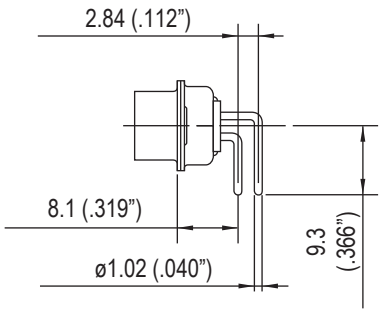

C

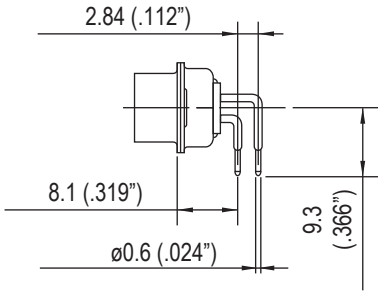

A4

plastic bracket:

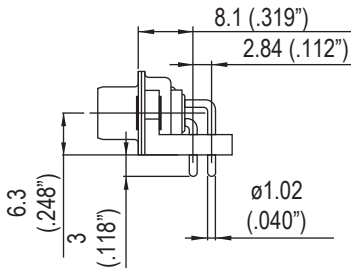

AJ3

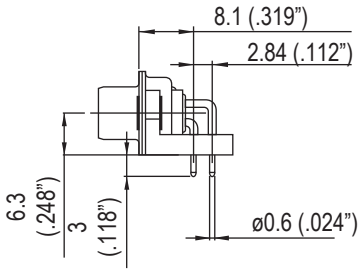

AJ4

metal bracket:

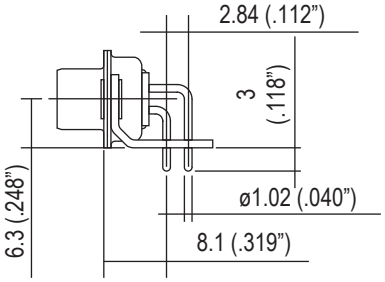

A

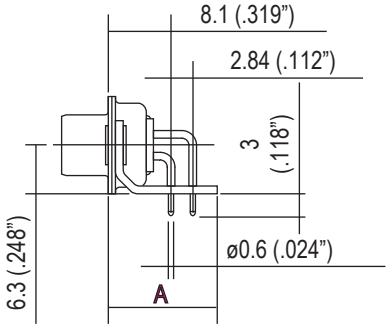

AM4: A=13.2mm
AZ4: A=11.5mm

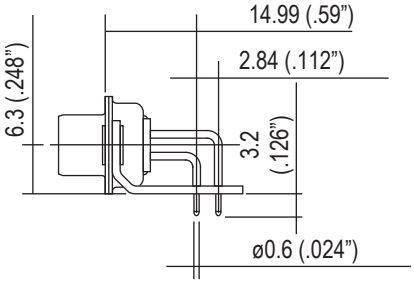

AM4B

50 contacts:

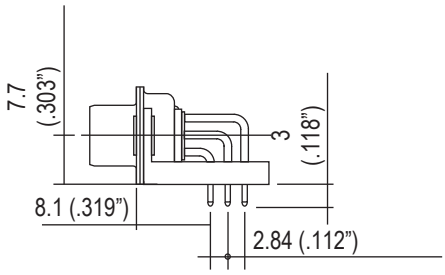

Termination

European footprint

without bracket:

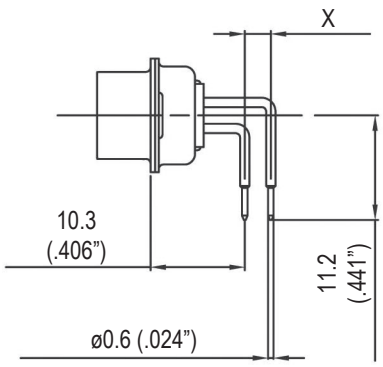

1AON: X=2.54mm
1BON: X=2.84mm

plastic bracket:

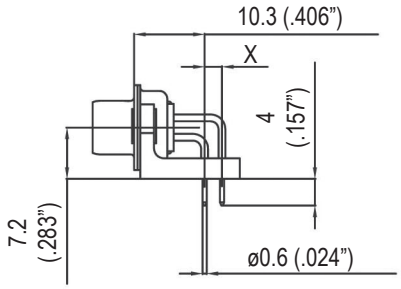

1APN: X=2.54mm
1BPN: X=2.84mm

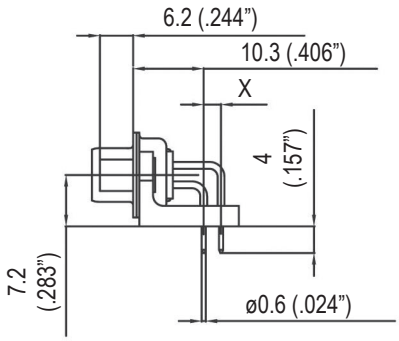

1AUN: X=2.54mm
1BUN: X=2.84mm

metal bracket:

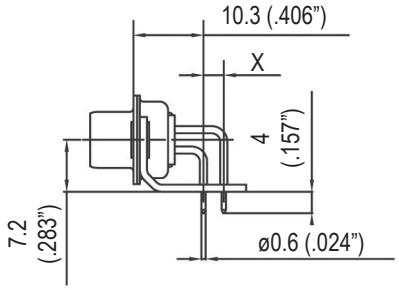

1AMN: X=2.54mm
1BMN: X=2.84mm

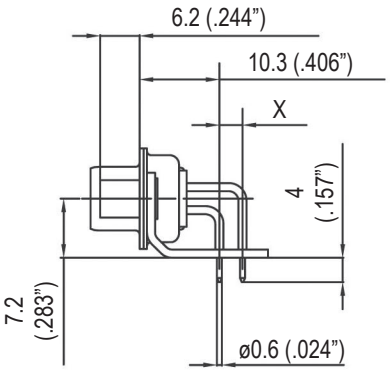

1ATN: X=2.54mm
1BTN: X=2.84mm

50 contacts:

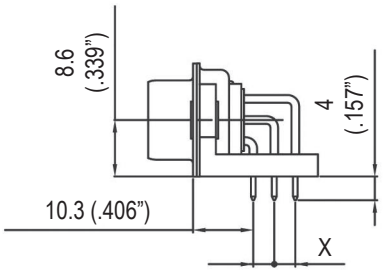

Termination

Solder Cup:

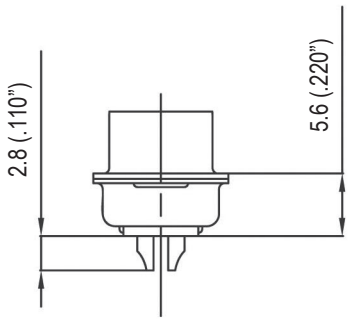

Wire Wrap:

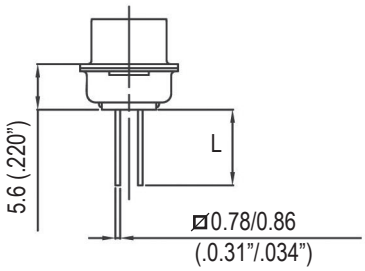

termination	Nb of wraps	L
F179	2	9.6mm (.378")
F179A	3	13mm (.512")

Straight PCB:

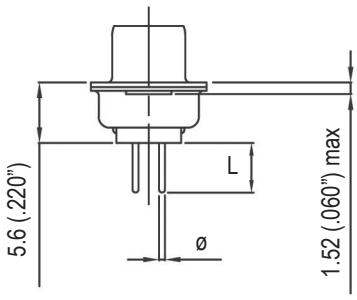

termination	Ø	L
U	0.6mm (.024")	3.2mm (.126")
V	1.02mm (.040")	2.4mm (.095")
T	0.6mm (.024")	4mm (.157")
OL2	0.6mm (.024")	5.5mm (.217")

Grounding tabs:

For straight termination

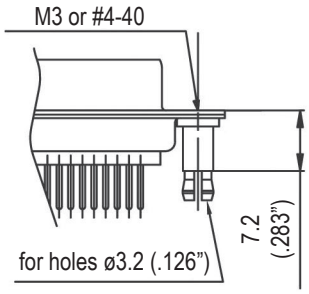

RM5

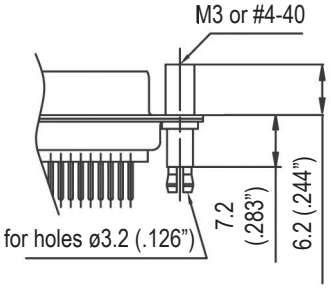

RM8

For R/A termination

FOR PCB 1.6

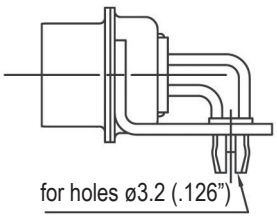

RM6

Panel mounting option

For straight and R/A termination

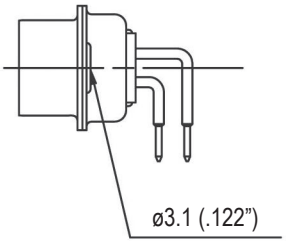

Standard rivet 3.1mm
no digit

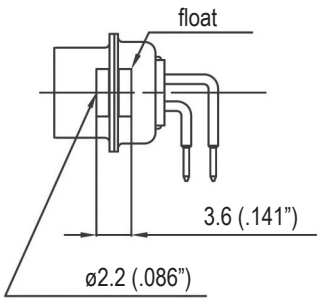

Float mounting
F

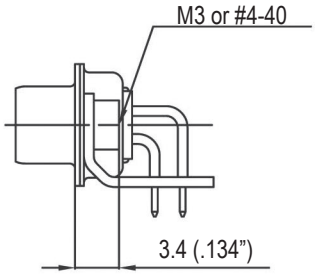

Threaded rear insert
H / G

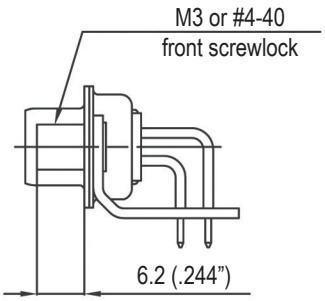

Fixed front female screwlock
VF / VFM

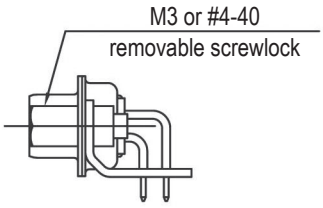

Removable female screwlock
VF2 / VFM2

Recommended PCB Layout

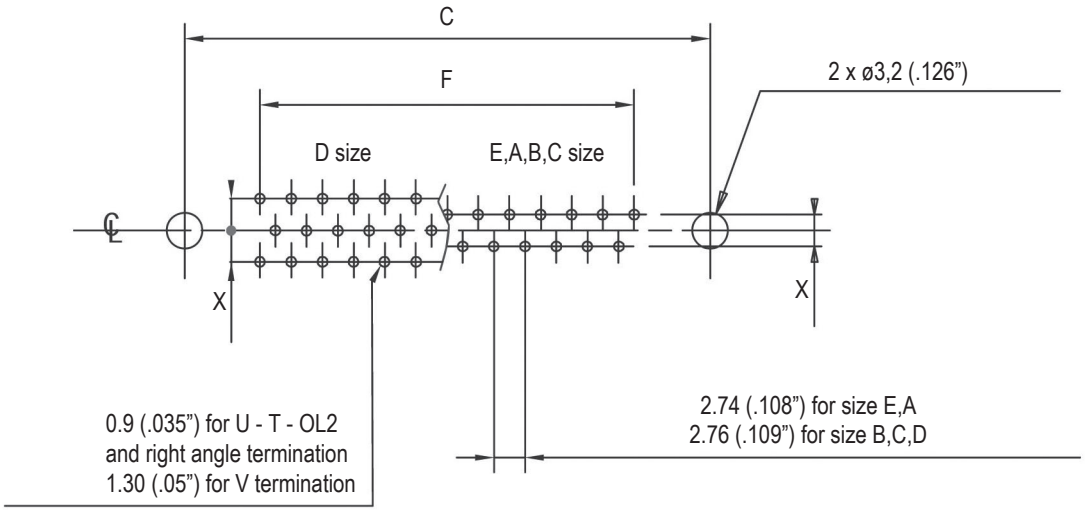

For straight PCB: X = 2.84mm (.112")

For right angle PCB: MIL: X = 2.84mm (.112")
European: X = 2.54mm (.100"), 2.84mm in option

	size E	size A	size B	size C	size D
C±0,1 (.004)	25 (.984)	33.3 (1.311)	47 (1.85)	63.5 (2.5)	61.1 (2.406)
F±0,05 (.002)	10.96 (.431)	19.18 (.755)	33.12 (1.304)	49.68 (1.956)	44.2 (1.74)

How to order

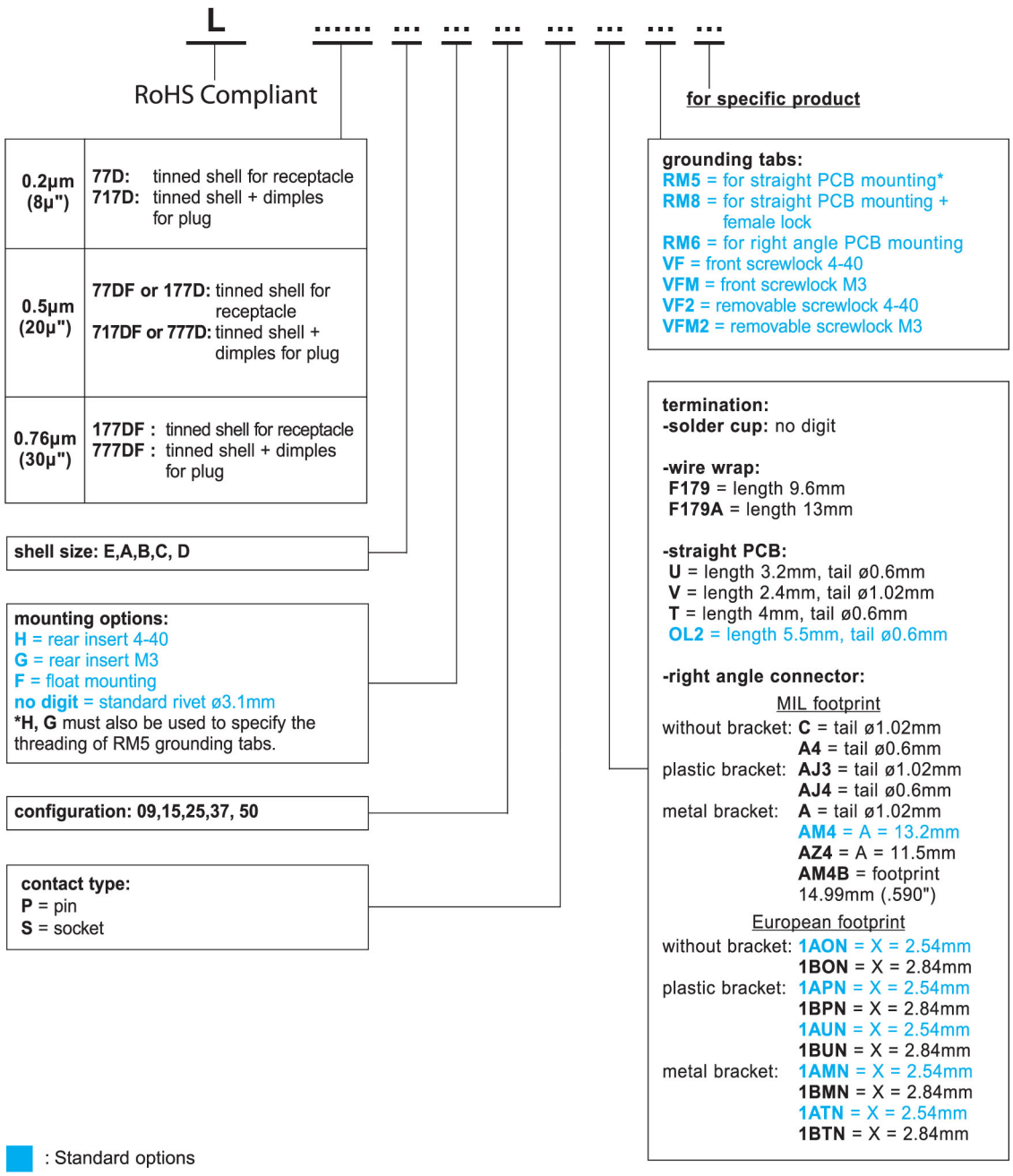

: Standard options

For special request, please consult factory

NOTES

Memo

Do not hesitate to contact us for further information

Amphenol

Amphenol IT & Communication Products

Block A3/A4, The 4th Industrial District of
Industrial Headquarters, Dong Keng Road
Gong Ming Town, Shen Zhen China
Fax:+86(0)755 2754 9955

Technical Support

Tel:+86(0)755 2717 7945
Info-dsub@amphenol.com.cn
http://www.dsubconnector.com

The information given in this document are as a guideline only. We reserve the right to modify our products in any way we deem necessary. Any duplication is prohibited, unless approved in writing.