RSG Security® DH Series

Electromagnetic Fire Door Handles

Features

- Very low current draw
- Dual Voltage inputs
- Terminal block connections
- High holding force
- Low residual magnetism
- Powder coated finishes (optional)
- Extension and misalignment rods (optional)
- Surface mount back box (optional)
- Time saving drill fixture (optional, for mounting catch plate)



Board of Standards and Appeals

Description

The RSG Security DH series fire door holders are constructed of the finest materials and workmanship available. The door holder is made of durable die-cast metal and offered in a high luster powdercoat finish.

Other features include standard dual voltage ac or dc inputs of 12 & 24V, 24 & 120V, and 24 & 220V models. While reducing stocking requirements, model 24120 draws a mere .020 ma. @ 24VDC, lowering overall job costs. In large installations the cost savings can be substantial.

Other features are single or double coil floor mounting, surface mounting and direct wall mounting. No brackets are required. The DH series door holder offers a new installation technique using an adhesive template assuring alignment without secondary adjustments.

Accessories include extension and misalignment rods in (various lengths) enabling parallelism between door and wall at distances greater than 12 inches and misalignment over 4 inches.

Aiding in installation is the aircraft quality DH drill that reduces installation time and provides a near perfect alignment of catch-plate and armature-again, lowering overall installation costs.

Basic units offer superior holding force and low residual magnetism. Models 1224 and 24120 can operate at higher listed voltages producing holding forces in excess of 100lbs. (45.3kg.) for special applications.

Technical Specifications

Current Draw	.020 ma @ 24VDC
Voltage	24 or 120V
Terminals	C&L or C&H

RSG Security® DH Series

Electromagnetic Fire Door Handles

Accessories: Hardware

DHSBPC	Swivel base chrome
DHSBB	Swivel base brass
DHCPC	Catch plate chrome
DHCPB	Catch plate brass
DHBBPC	Surface back box chrome
DHBBB	Surface back box brass
DHW	Extension wrenches
DHDF	Drilling fixture

Accessories: Extensions

DHE1PC	1 inch extension chrome
DHE1B	1 inch extension brass
DHE1.5PC	1.5 inch extension chrome
DHE1.5B	1.5 inch extension br
DHE2PC	2 inch extension chrome
DHE2B	2 inch extension brass
DHE3PC	3 inch extension chrome
DHE3B	3 inch extension brass
DHEAPC	4 inch adjustable extension chrome
DHEAB	4 inch adjustable extension brass

Model	Voltage	DC/mA	AC/mA	Terminals	LB.	KG
1224	12V	40	38	C & L	30	13.6
	24V	40	36	C & H	30	13.6
24120	24V	20	19	C & L	40	18.1
	120V	-	20	C & H	35	15.8
24220	24V	20	19	C & L	20	9.0
	220V	-	15	C & H	22	9.8

NOTE: Holding forces listed in above table correspond with shaded values, non-shaded values are slightly less.

Model	Voltage	DC/mA	AC/mA	Terminals	LB.	KG
1224	24V	0.085	0.081	C & L	75	34.0
24120	120V	-	20	C & L	110	49.8

HIGH HOLDING FORCE/SPECIAL APPLICATIONS: To obtain performance values in table above, apply high listed voltage to low voltage terminals (C&L).
NOTE: This configuration can only be applied to models 1224 & 24120.

Example: DH (24120) (S) (P) (C) (1)

Door Holder

Model/Voltage
1224, 24120, 24200

Mount Style
Surface, Flush, Ground, Recessed

Powdercoated

Finish
Chrome, Brass, DBR (Dark Bronze)

Coils
1, 2 For ground mount models

Extension Rod Applications

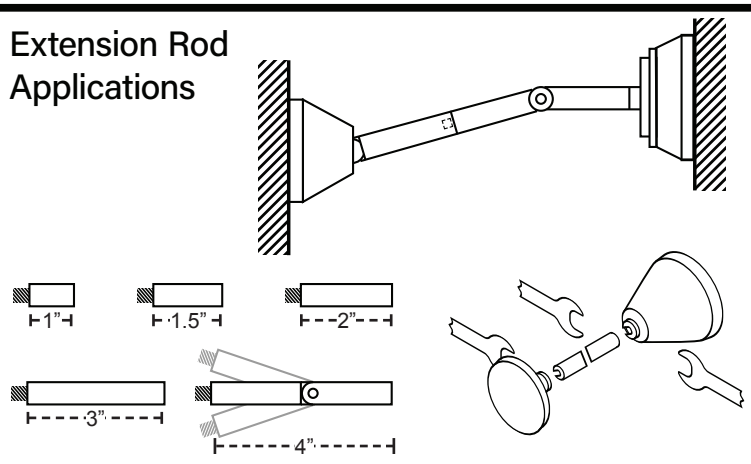

Dual Voltage
(rear view shown)

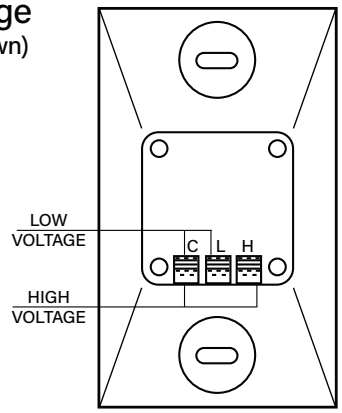

RSG Security® DH Series

Electromagnetic Fire Door Handles

Magnetic Door Holder

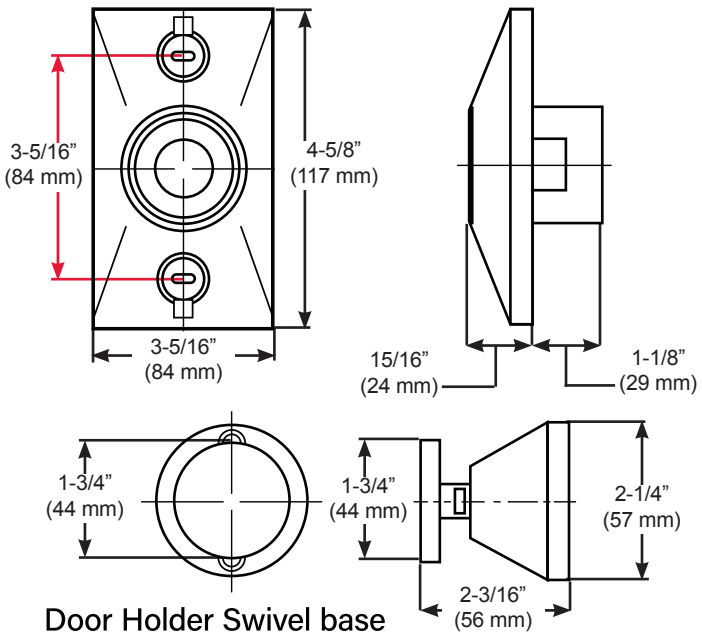

Door Holder Swivel base

Installation Tools:
DHDF (drill fixture)

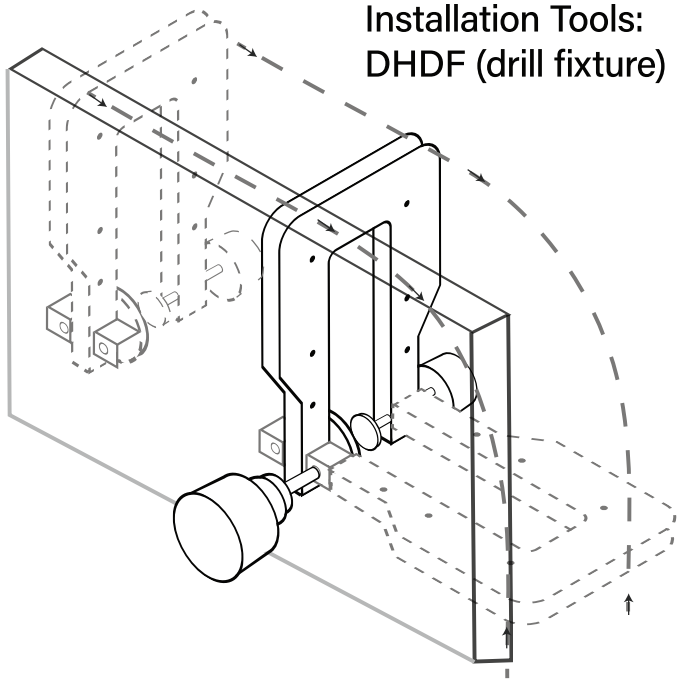

ACCESSORIES

Extensions:
Extension rods

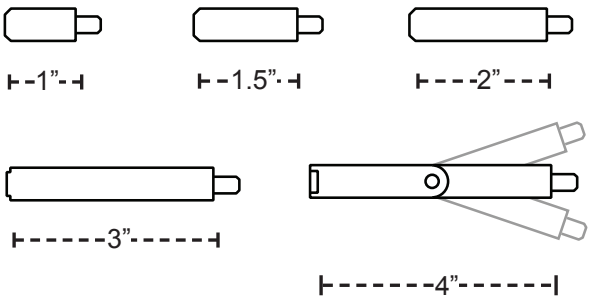

Surface Mounting:
DHHBB (back box)

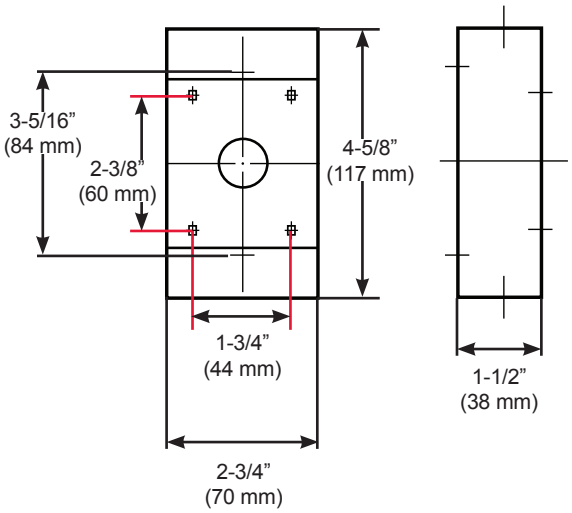

Extension Wrenches

