Dual HDMI Receiver, Multiformat SDTV/HDTV Video Decoder, and RGB Graphics Digitizer

Data Sheet **ADV7441A**

FEATURES

- **Dual HDMI® 1.3 receiver**
- **HDMI support**
  - **Deep color support**
  - **xvYCC Enhanced colorimetry**
  - **Gamut metadata**
- **225 MHz HDMI receiver**
- **Repeater support**
- **High-bandwidth digital content protection (HDCP 1.3)**
- **S/PDIF (IEC60958-compatible) digital audio output**
- **Multichannel I2S audio output (up to 8 channels)**
- **Adaptive equalizer for cable lengths up to 30 meters**
- **Internal EDID RAM**
- **DVI 1.0**
- **Multiformat decoder**
  - **Four 10-bit analog-to-digital converters (ADCs)**
  - **ADC sampling rates up to 170 MHz**
  - **Mux with 12 analog input channels**
  - **SCART fast blank sampling support**
  - **NTSC/PAL/SECAM color standards support**
  - **525p-/625p-component progressive scan formats support**
  - **720p-/1080i-/1080p-component HD formats support**
  - **Digitizes RGB graphics from VGA to UXGA rates (up to 1600 × 1200 at 60 Hz)**
  - **VBI data slicer (including teletext)**
  - **Analog-to-HDMI fast switching mode**
- **General**
  - **Highly flexible output interface**
  - **STDI function support standard identification**
  - **2 any-to-any, 3 × 3 color-space conversion matrices**
  - **Programmable interrupt request output pins**

APPLICATIONS

- **Advanced TVs**
  - **PDP HDTVs**
  - **LCD TVs (HDTV ready)**
  - **LCD/DLP® rear projection HDTVs**
  - **CRT HDTVs**
  - **LCoS® HDTVs**
- **Audio/video receivers (AVR)**
- **LCD/DLP front projectors**
- **HDTV STBs with PVR**
- **DVD recorders with progressive scan input support**

GENERAL DESCRIPTION

The ADV7441A is a high quality multiformat video decoder and graphics digitizer with an integrated 2:1 multiplexed HDMI receiver.

The ADV7441A contains two main processing sections. The first section is the standard definition processor (SDP), which processes all types of PAL, NTSC, and SECAM signals. The second section is the component processor (CP), which processes YPrPb and RGB component formats, including RGB graphics. The CP also processes the video signals from the HDMI receiver. The ADV7441A can keep the HDCP link between a HDMI source and the selected HDMI port active in analog mode operation. This allows for fast switching between the analog and HDMI modes.

As a decoder, the ADV7441A can convert PAL, NTSC, and SECAM composite or S-Video signals into a digital ITU-R BT.656 format. It can also decode a component RGB or YPrPb video signal into a digital YCrCb or RGB pixel output stream. The ADV7441A supports the 525i, 625i, 525p, 625p, 720p, 1080i, 1080p, and 1250i component video standards, as well as many other HD and SMPTE standards. SCART and overlay functionality are enabled by the ability of the ADV7441A to process CVBS and standard definition RGB signals simultaneously. As a graphics digitizer, the ADV7441A can digitize RGB graphics signals from VGA to UXGA rates and convert them to a digital RGB or YCrCb pixel output stream.

The ADV7441A incorporates a dual-input HDMI-compatible receiver that supports HDTV formats up to 1080p and display resolutions up to UXGA. The reception of encrypted video is possible with the inclusion of HDCP. The inclusion of adaptive equalization in the HDMI receiver ensures robust operation of the interface with cable lengths up to 30 meters. The HDMI receiver has advanced audio functionality, including a mute controller that prevents audible extraneous noise in the audio output.

To facilitate professional applications, where HDCP processing and decryption is not required, a derivative part of the ADV7441A is available. This allows users who are not HDCP adopters to purchase the ADV7441A (see the Ordering Guide section for details).

Fabricated using an advanced CMOS process, the ADV7441A is available in a space-saving, 144-lead, surface-mount, RoHS-compliant, plastic LQFP and is specified over the −40°C to +85°C temperature range.

Advantiv™
Advanced Television Solutions by Analog Devices

Rev. H

Information furnished by Analog Devices is believed to be accurate and reliable. However, no responsibility is assumed by Analog Devices for its use, nor for any infringements of patents or other rights of third parties that may result from its use. Specifications subject to change without notice. No license is granted by implication or otherwise under any patent or patent rights of Analog Devices. Trademarks and registered trademarks are the property of their respective owners.

One Technology Way, P.O. Box 9106, Norwood, MA 02062-9106, U.S.A.
Tel: 781.329.4700 **www.analog.com**
Fax: 781.461.3113 **©2007–2012 Analog Devices, Inc. All rights reserved.**

TABLE OF CONTENTS

Features ... 1
Applications ... 1
General Description ... 1
Revision History ... 2
Functional Block Diagram ... 3
Specifications ... 4
Electrical Characteristics ... 4
Video Specifications ... 6
Analog and HDMI Specifications ... 7
Timing Characteristics ... 8
Absolute Maximum Ratings ... 10
Thermal Resistance ... 10
Package Thermal Performance ... 10
ESD Caution ... 10
Pin Configuration and Function Descriptions ... 11
Functional Overview ... 14
Analog Front End ... 14
HDMI Receiver ... 14
Standard Definition Processor Pixel Data Output Modes ... 14
Component Processor Pixel Data Output Modes ... 14
Composite and S-Video Processing ... 14
Component Video Processing ... 15
RGB Graphics Processing ... 15
General Features ... 15
Theory of Operation ... 16
Analog Front End ... 16
HDMI Receiver ... 16
Standard Definition Processor ... 16
Component Processor (CP) ... 17
VBI Data Processor ... 17
Pixel Output Formatting ... 18
Register Map Architecture ... 21
Typical Connection Diagram ... 22
Recommended External Loop Filter Components ... 23
ADV7441A Evaluation Platform ... 24
Outline Dimensions ... 25
Ordering Guide ... 25

REVISION HISTORY

2/12—Rev. G to Rev. H

Deleted EVAL-ADV7441AFEZ_2 ... Universal
Changes to ADV7441A Evaluation Platform Section ... 24

5/11—Rev. F to Rev. G

Added Endnote 10 (Table 1) ... 4

11/10—Rev. E to Rev. F

Changes to Product Title and Features Section ... 1
Changes to Analog Front End Section ... 14
Changes to Ordering Guide ... 25

7/09—Rev. D to Rev. E

Change to Pin No. Order for AIN1 to AIN12 Pins (Table 7) ... 12

4/09—Rev. C to Rev. D

Changes to Package Thermal Performance Section ... 10
Changes to VBI Data Processor Section ... 17

1/09—Rev. B to Rev. C

Change to Figure 1 ... 3
Changes to Static Performance Parameter and Power Requirements Parameter, Table 1 ... 4
Changes to HDMI Specifications Parameter, Table 3 ... 7
Change to Maximum Junction Temperature (T_{J_MAX}), Table 5 ... 10
Changes to Package Thermal Performance Section ... 10
Changes to ADV7441A Evaluation Platform Section ... 24
Changes to Table 13 ... 24
Changes to Figure 11 ... 24
Changes to Ordering Guide ... 25

7/08—Revision B: Initial Version

FUNCTIONAL BLOCK DIAGRAM

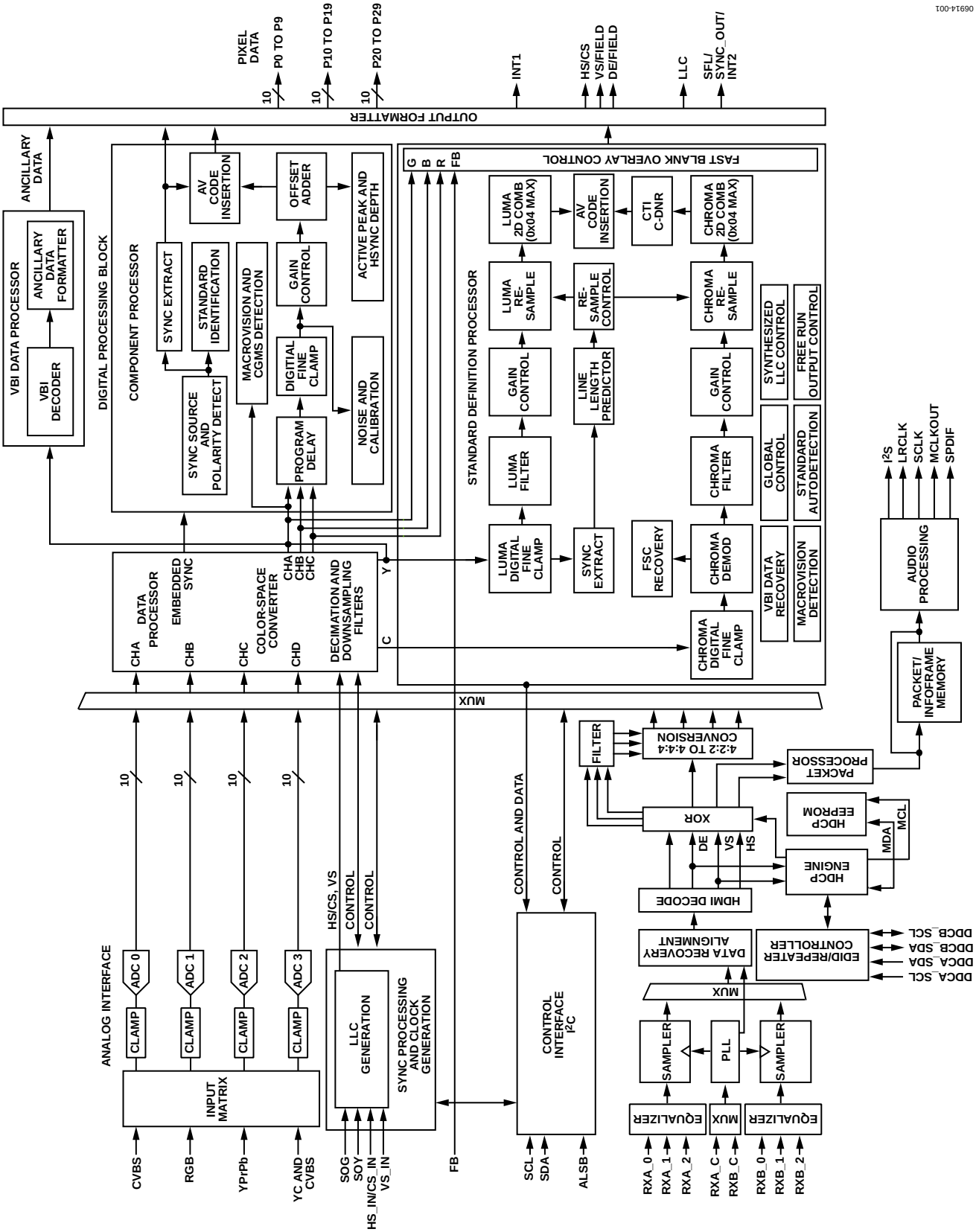

Figure 1.

SPECIFICATIONS

ELECTRICAL CHARACTERISTICS

AVDD = 1.71 V to 1.89 V, DVDD = 1.62 V to 1.98 V, DVDDIO = 2.97 V to 3.63 V, PVDD = 1.71 V to 1.89 V, TVDD = 3.135 V to 3.465 V, CVDD = 1.71 V to 1.89 V. Operating temperature range is −40°C to +85°C, unless otherwise noted.

Table 1.

Parameter[1]	Symbol	Test Conditions	Min	Typ	Max	Unit
STATIC PERFORMANCE[2]						
Resolution (Each ADC)	N				10	Bits
Integral Nonlinearity	INL	BSL 27 MHz (@ a 10-bit level)		−0.5/+2		LSB
		BSL 54 MHz (@ a 10-bit level)		−0.5/+2		LSB
		BSL 74 MHz (@ a 10-bit level)		−0.5/+1.5		LSB
		BSL 110 MHz (@ a 10-bit level)		−0.7/+2		LSB
		BSL 170 MHz (@ an 8-bit level)		−0.25/+0.5		LSB
Differential Nonlinearity	DNL	At 27 MHz (@ a 10-bit level)		−0.5/+0.5		LSB
		At 54 MHz (@ a 10-bit level)		±0.5		LSB
		At 74 MHz (@ a 10-bit level)		±0.5		LSB
		At 110 MHz (@ a 10-bit level)		±0.5		LSB
		At 170 MHz (@ an 8-bit level)		−0.25/+0.2		LSB
DIGITAL INPUTS						
Input High Voltage[3]	V_{IH}		2			V
		HS_IN/CS_IN, VS_IN low trigger mode	0.7			V
Input Low Voltage[3]	V_{IL}				0.8	V
		HS_IN/CS_IN, VS_IN low trigger mode			0.3	V
Input Current	I_{IN}	Pin 21 ($\overline{RESET}$)	−60		+60	µA
		All input pins other than Pin 21	−10		+10	µA
Input Capacitance[4]	C_{IN}				10	pF
DIGITAL OUTPUTS						
Output High Voltage[5]	V_{OH}	I_{SOURCE} = 0.4 mA	2.4			V
Output Low Voltage[5]	V_{OL}	I_{SINK} = 3.2 mA			0.4	V
High Impedance Leakage Current	I_{LEAK}				10	µA
Output Capacitance[4]	C_{OUT}				20	pF
POWER REQUIREMENTS[4]						
Digital Core Power Supply	DVDD		1.62	1.8	1.98	V
Digital I/O Power Supply	DVDDIO		2.97	3.3	3.63	V
PLL Power Supply	PVDD		1.71	1.8	1.89	V
Analog Power Supply	AVDD		1.71	1.8	1.89	V
Terminator Power Supply	TVDD		3.135	3.3	3.465	V
Comparator Power Supply	CVDD		1.71	1.8	1.89	V
Digital Core Supply Current	I_{DVDD}	CVBS input sampling @ 54 MHz[6, 7]		140	198	mA
		Graphics RGB sampling @ 108 MHz[6, 7]		141	290	mA
		SCART RGB fast blank sampling @ 54 MHz[6, 7]		152	218	mA
		YPrPb 1080p sampling @ 148.5 MHz[6, 7]		203	305	mA
		HDMI RGB sampling @ 165 MHz[7, 8, 9]		242	358	mA
		HDMI RGB sampling @ 225 MHz[7, 8, 9]		242	414	mA
Digital I/O Supply Current	I_{DVDDIO}	CVBS input sampling @ 54 MHz[6, 7]		16	48	mA
		Graphics RGB sampling @ 108 MHz[6, 7]		17	80	mA
		SCART RGB fast blank sampling @ 54 MHz[6, 7]		16	50	mA
		YPrPb 1080p sampling @ 148.5 MHz[6, 7]		42	136	mA
		HDMI RGB sampling @ 165 MHz[7, 8, 9]		17	192	mA
		HDMI RGB sampling @ 225 MHz[7, 8, 9, 10]		20	151	mA

Parameter[1]	Symbol	Test Conditions	Min	Typ	Max	Unit
HDMI Comparators	I_{CVDD}	CVBS input sampling @ 54 MHz[6, 7]		56	83	mA
TMDS PLL and Equalizer		Graphics RGB sampling @ 108 MHz[6, 7]		56	83	mA
Supply Current		SCART RGB fast blank sampling @ 54 MHz[6, 7]		56	83	mA
		YPrPb 1080p sampling @ 148.5 MHz[6, 7]		56	83	mA
		HDMI RGB sampling @ 165 MHz[7, 8, 9]		86	111	mA
		HDMI RGB sampling @ 225 MHz[7, 8, 9]		95	125	mA
Analog Supply Current[11]	I_{AVDD}	CVBS input sampling @ 54 MHz[6, 7]		63	115	mA
		Graphics RGB sampling @ 108 MHz[6, 7]		174	312	mA
		SCART RGB fast blank sampling @ 54 MHz[6, 7]		225	388	mA
		YPrPb 1080p sampling @ 148.5 MHz[6, 7]		180	318	mA
		HDMI RGB sampling @ 165 MHz[7, 8, 9]		0	2	mA
		HDMI RGB sampling @ 225 MHz[7, 8, 9]		0	2	mA
Terminator Supply Current	I_{TVDD}	CVBS input sampling @ 54 MHz[6, 7]		12	20	mA
		Graphics RGB sampling @ 108 MHz[6, 7]		12	20	mA
		SCART RGB fast blank sampling @ 54 MHz[6, 7]		12	20	mA
		YPrPb 1080p sampling @ 148.5 MHz[6, 7]		12	20	mA
		HDMI RGB sampling @ 165 MHz[7, 8, 9, 12]		42	97	mA
		HDMI RGB sampling @ 225 MHz[7, 8, 9, 12]		63	100	mA
Audio and Video PLL Supply Current	I_{PVDD}	CVBS input sampling @ 54 MHz[6, 7]		18	24	mA
		Graphics RGB sampling @ 108 MHz[6, 7]		14	22	mA
		SCART RGB fast blank sampling @ 54 MHz[6, 7]		17	24	mA
		YPrPb 1080p sampling @ 148.5 MHz[6, 7]		19	25	mA
		HDMI RGB sampling @ 165 MHz[7, 8, 9]		10	20	mA
		HDMI RGB sampling @ 225 MHz[7, 8, 9]		15	21	mA
Power-Down Current	I_{PWRDN}			11.6		mA
Power-Up Time	t_{PWRUP}			25		ms

[1] The minimum/maximum specifications are guaranteed over the −40°C to +85°C temperature range (T_{MIN} to T_{MAX}).
[2] All ADC linearity tests were performed at input range full scale − 12.5% and at zero scale + 12.5%.
[3] Pin 1, Pin 105, Pin 106, and Pin 144 are 5 V tolerant.
[4] Guaranteed by characterization.
[5] The V_{OH} and V_{OL} levels were obtained using the default drive strength value (0x15) in User Map Register 0xF4.
[6] Current measurements for analog inputs were made with HDMI/analog simultaneous mode disabled (User Map Register 0xBA, Bit 7, programmed with Value 0) and with no HDMI sources connected to the part.
[7] Typical current measurements were taken with nominal voltage supply levels and an SMPTE bar video pattern input. Maximum current measurements were taken with maximum rating voltage supply levels and a MoiréX video pattern input.
[8] Current measurements for HDMI inputs were made with a source connected to the active HDMI port and with no source connected to the inactive HDMI port.
[9] Audio stream is an uncompressed stereo audio sampling frequency of f_S = 48 kHz, and MCLKOUT = 256 f_S.
[10] The maximum I_{DVDDIO} value for the HDMI RGB sampling @ 225 MHz appears lower than expected. This is due to the 1080p 12-bit deep color mode input used during evaluation. In this mode, the input HDMI TMDS clock has a frequency of 222.75 MHz; however, the output pixel clock is stepped down to 148.5 MHz to account for the extra bits of data. DVDDIO power is proportional to the output pixel clock, therefore the stepping down of the output pixel clock data in 1080p 12-bit deep color mode results in lower than expected I_{DVDDIO}.
[11] Analog current measurements for CVBS were made with only ADC0 powered up; for RGB, with only ADC0, ADC1, and ADC2 powered up; for SCART FB, with all ADCs powered up; and for HDMI mode, with all ADCs powered off.
[12] The terminator supply current may vary with the HDMI source in use.

VIDEO SPECIFICATIONS

AVDD = 1.71 V to 1.89 V, DVDD = 1.62 V to 1.98 V, DVDDIO = 2.97 V to 3.63 V, PVDD = 1.71 V to 1.89 V, TVDD = 3.135 V to 3.465 V, CVDD = 1.71 V to 1.89 V. Operating temperature range is −40°C to +85°C, unless otherwise noted.

Table 2.

Parameter[1, 2]	Symbol	Test Conditions	Min	Typ	Max	Unit
NONLINEAR SPECIFICATIONS						
Differential Phase	DP	CVBS input, modulated in five steps		0.3		Degrees
Differential Gain	DG	CVBS input, modulated in five steps		0.6		%
Luma Nonlinearity	LNL	CVBS input, five steps		0.8		%
NOISE SPECIFICATIONS						
SNR Unweighted		Luma ramp		61.8		dB
		Luma flat field		63.1		dB
Analog Front-End Crosstalk				60		dB
LOCK TIME SPECIFICATIONS						
Horizontal Lock Range			−5		+5	%
Vertical Lock Range			40		70	Hz
F_{SC} Subcarrier Lock Range				±1.3		kHz
Color Lock-In Time				60		Lines
Synchronization Depth Range[3]			20		200	%
Color Burst Range			5		200	%
Vertical Lock Time				2		Fields
Horizontal Lock Time				100		Lines
CHROMA SPECIFICATIONS						
Hue Accuracy	HUE			1		Degrees
Color Saturation Accuracy	CL_AC			1		%
Color AGC Range			5		400	%
Chroma Amplitude Error				0.5		%
Chroma Phase Error				0.1		Degrees
Chroma Luma Intermodulation				0.3		%
LUMA SPECIFICATIONS						
Luma Brightness Accuracy		CVBS, 0.5 V input		1		%
Luma Contrast Accuracy		CVBS, 0.5 V input		1		%

[1] The minimum/maximum specifications are guaranteed over the −40°C to +85°C temperature range (T_{MIN} to T_{MAX}).
[2] Guaranteed by characterization.
[3] Nominal synchronization depth is 300 mV at 100% of the synchronization depth range.

ANALOG AND HDMI SPECIFICATIONS

AVDD = 1.71 V to 1.89 V, DVDD = 1.62 V to 1.98 V, DVDDIO = 2.97 V to 3.63 V, PVDD = 1.71 V to 1.89 V, TVDD = 3.135 V to 3.465 V, CVDD = 1.71 V to 1.89 V. Operating temperature range is −40°C to +85°C, unless otherwise noted.

Table 3.

Parameter[1, 2]	Test Conditions	Min	Typ	Max	Unit
CLAMP CIRCUITRY					
External Clamp Capacitor			0.1		µF
Input Impedance (Except Pin 74)	Clamps switched off		10		MΩ
Input Impedance of Pin 74			20		kΩ
Common-Mode Level (CML)			0.88		V
ADC Full-Scale Level			CML + 0.5		V
ADC Zero-Scale Level			CML − 0.5		V
ADC Dynamic Range			1		V
Clamp Level (When Locked)	CVBS input		CML − 0.122		V
	SCART RGB input (R, G, B signals)		CML − 0.167		V
	S-Video input (Y signal)		CML− 0.122		V
	S-Video input (C signal)		CML		V
	Component input (Y signal)		CML − 0.120		V
	Component input (Pr signal)		CML		V
	Component input (Pb signal)		CML		V
	PC RGB input (R, G, B signals)		CML − 0.120		V
Large Clamp Source Current	SDP only		8		mA
Large Clamp Sink Current	SDP only		8		mA
Fine Clamp Source Current	SDP only		0.25		µA
Fine Clamp Sink Current	SDP only		0.4		µA
HDMI SPECIFICATIONS[3]					
Intrapair (Positive-to-Negative) Differential Input Skew[4, 5]				0.4 t_{bit}	
Channel-to-Channel Differential Input Skew[5, 6]				0.2 t_{pixel} + 1.78 ns	

[1] The minimum/maximum specifications are guaranteed over the −40°C to +85°C temperature range (T_{MIN} to T_{MAX}).
[2] Guaranteed by characterization.
[3] Guaranteed by design.
[4] t_{bit} is 1/10 the pixel period t_{pixel}.
[5] The unit of measurement depends on the video applied and the TMDS clock frequency.
[6] t_{pixel} is the period of the TMDS clock.

TIMING CHARACTERISTICS

AVDD = 1.71 V to 1.89 V, DVDD = 1.62 V to 1.98 V, DVDDIO = 2.97 V to 3.63 V, PVDD = 1.71 V to 1.89 V, TVDD = 3.135 V to 3.465 V, CVDD = 1.71 V to 1.89 V. Operating temperature range is −40°C to +85°C, unless otherwise noted.

Table 4.

Parameter[1, 2]	Symbol	Test Conditions	Min	Typ	Max	Unit
SYSTEM CLOCK AND CRYSTAL						
Crystal Nominal Frequency				28.6363		MHz
Crystal Frequency Stability					±50	ppm
Horizontal Sync Input Frequency			14.8		110	kHz
LLC Frequency Range			12.825		170	MHz
I²C PORTS (FAST MODE)[3]						
xCL Frequency[4]					400	kHz
xCL Minimum Pulse Width High[4]	t_1		0.6			µs
xCL Minimum Pulse Width Low[4]	t_2		1.3			µs
Hold Time (Start Condition)	t_3		0.6			µs
Setup Time (Start Condition)	t_4		0.6			µs
xDA Setup Time[4]	t_5		100			ns
xCL and xDA Rise Times[4]	t_6				300	ns
xCL and xDA Fall Times[4]	t_7				300	ns
Setup Time for Stop Condition	t_8		0.6			µs
I²C PORTS (NORMAL MODE)[3]						
xCL Frequency[4]					100	kHz
xCL Minimum Pulse Width High[4]	t_1		4			µs
xCL Minimum Pulse Width Low[4]	t_2		4.7			µs
Hold Time (Start Condition)	t_3		4			µs
Setup Time (Start Condition)	t_4		4.7			µs
xDA Setup Time[4]	t_5		250			ns
xCL and xDA Rise Times[4]	t_6				1000	ns
xCL and xDA Fall Times[4]	t_7				300	ns
Setup Time for Stop Condition	t_8		4			µs
RESET FEATURE						
Reset Pulse Width			5			ms
CLOCK OUTPUTS						
LLC Mark-Space Ratio	t_9:t_{10}		45:55		55:45	% duty cycle
DATA AND CONTROL OUTPUTS						
Data Output Transition Time SDR (SDP)[5]	t_{11}	Negative clock edge to start of valid data			3.4	ns
	t_{12}	End of valid data to negative clock edge			2.4	ns
Data Output Transition Time SDR (CP)[6]	t_{13}	End of valid data to negative clock edge			2	ns
	t_{14}	Negative clock edge to start of valid data			0.5	ns
I²S PORT (MASTER MODE)						
SCLK Mark-Space Ratio	t_{15}:t_{16}		45:55		55:45	% duty cycle
LRCLK Data Transition Time	t_{17}	End of valid data to negative SCLK edge			10	ns
	t_{18}	Negative SCLK edge to start of valid data			10	ns
I2Sx Data Transition Time[7]	t_{19}	End of valid data to negative SCLK edge			5	ns
	t_{20}	Negative SCLK edge to start of valid data			5	ns
MCLKOUT Frequency			4.096		24.576	MHz

[1] The minimum/maximum specifications are guaranteed over the −40°C to +85°C temperature range (T_{MIN} to T_{MAX}).
[2] Guaranteed by characterization.
[3] Refers to all I²C pins (DDC and control port).
[4] The prefix x refers to pin names beginning with S, DDCA_S, and DDCB_S.
[5] SDP timing figures were obtained using the default drive strength value (0x15) in User Map Register 0xF4.
[6] CP timing figures were obtained using the maximum drive strength value (0x3F) in User Map Register 0xF4.
[7] The suffix x refers to pin names ending with 0, 1, 2, and 3.

Timing Diagrams

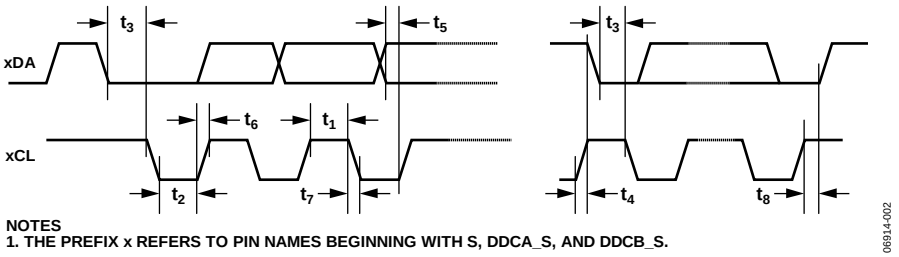

NOTES
1. THE PREFIX x REFERS TO PIN NAMES BEGINNING WITH S, DDCA_S, AND DDCB_S.

Figure 2. I²C Timing

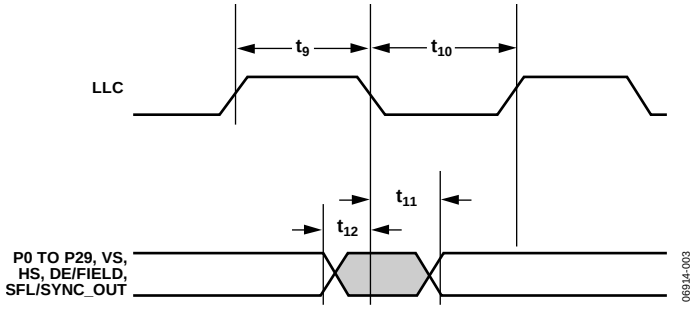

Figure 3. Pixel Port and Control SDR Output Timing (SDP Core)

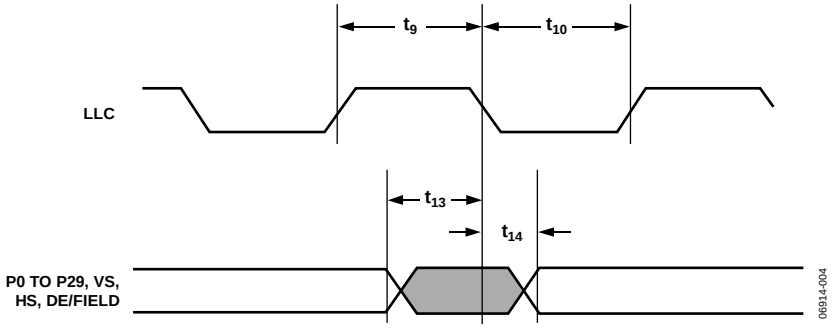

Figure 4. Pixel Port and Control SDR Output Timing (CP Core)

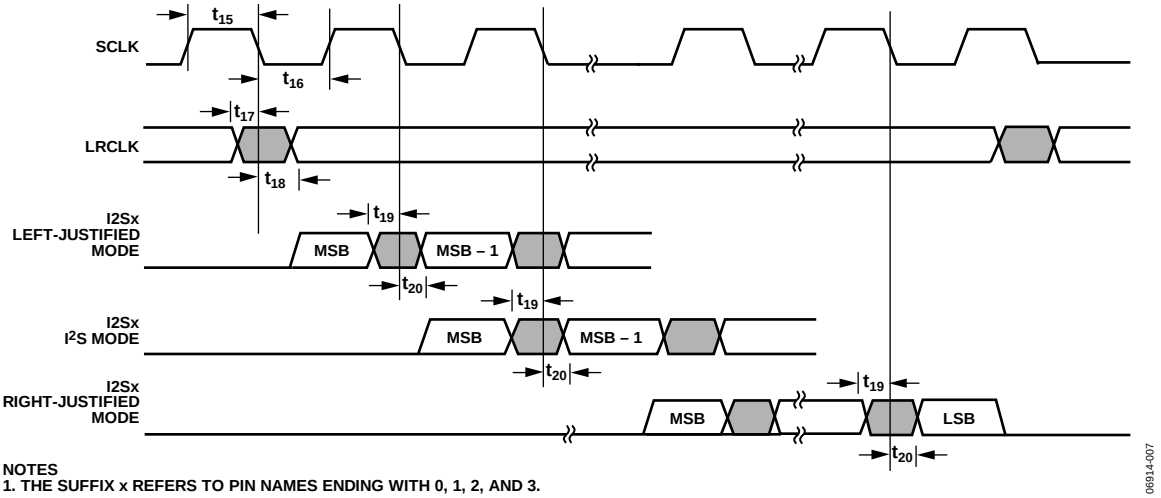

NOTES
1. THE SUFFIX x REFERS TO PIN NAMES ENDING WITH 0, 1, 2, AND 3.

Figure 5. I²S Timing

ABSOLUTE MAXIMUM RATINGS

Table 5.

Parameter	Rating
AVDD to AGND	2.2 V
DVDD to DGND	2.2 V
PVDD to PGND	2.2 V
DVDDIO to DGND	4 V
CVDD to CGND	2.2 V
TVDD to TGND	4 V
DVDDIO to AVDD	−0.3 V to +3.6 V
DVDDIO to TVDD	−3.6 V to +3.6 V
DVDDIO to DVDD	−2 V to +2 V
CVDD to DVDD	−2 V to +0.3 V
PVDD to DVDD	−2 V to +0.3 V
AVDD to CVDD	−2 V to +2 V
AVDD to PVDD	−2 V to +2 V
AVDD to DVDD	−2 V to +0.3 V
AVDD to TVDD	−3.6 V to +0.3 V
TVDD to DVDD	−2 V to +2 V
Digital Inputs	
Voltage to DGND	DGND − 0.3 V to DVDDIO + 0.3 V
Digital Outputs	
Voltage to DGND	DGND − 0.3 V to DVDDIO + 0.3 V
Analog Inputs	
Voltage to AGND	AGND − 0.3 V to AVDD + 0.3 V
Maximum Junction Temperature (T_{J_MAX})	119°C
Storage Temperature Range	−65°C to +150°C
Infrared Reflow, Soldering (20 sec)	260°C

Stresses above those listed under Absolute Maximum Ratings may cause permanent damage to the device. This is a stress rating only; functional operation of the device at these or any other conditions above those indicated in the operational section of this specification is not implied. Exposure to absolute maximum rating conditions for extended periods may affect device reliability.

THERMAL RESISTANCE

Table 6.

Package Type	Ψ_{JT}[1]	Unit
144-Lead LQFP (ST-144)	1.62	°C/W

[1] Junction-to-package surface thermal resistance.

PACKAGE THERMAL PERFORMANCE

To reduce power consumption during ADV7441A operation, turn off unused ADCs.

On a 4-layer PCB that includes a solid ground plane, the value of θ_{JA} is 25.3°C/W. However, due to variations within the PCB metal and, therefore, variations in PCB heat conductivity, the value of θ_{JA} may differ for various PCBs.

The most efficient measurement technique is to use the surface temperature of the package to estimate the die temperature because it is not affected by the variance associated with the value of θ_{JA}.

The maximum junction temperature (T_{J_MAX}) of 119°C must not be exceeded. The following equation calculates the junction temperature using the measured surface temperature of the package and applies only when no heat sink is used on the device under test:

$$T_{J_MAX} = T_S + (\Psi_{JT} \times W_{TOTAL})$$

where:
T_S is the surface temperature of the package expressed in degrees Celsius.
Ψ_{JT} is the junction-to-package surface thermal resistance.
$W_{TOTAL} = \{(AVDD \times I_{AVDD}) + (DVDD \times I_{DVDD}) + (DVDDIO \times I_{DVDDIO}) + (PVDD \times I_{PVDD}) + (CVDD \times I_{CVDD}) + (TVDD \times I_{TVDD})\}$.

The ADV7441A can be operated in ambient temperatures of up to +85°C. However, in video modes where highest power is consumed and there is higher than nominal power supply voltages and worst-case video data, operation at these ambient temperatures may cause the junction temperature to exceed its maximum allowed value (119°C). One way to avoid this is to restrict the ambient temperature to be below +79°C. However, even if the ambient temperature is kept below +79°C, the user still needs to observe the thermally efficient PCB design recommendations outlined in this section to ensure that the maximum allowed junction temperature is not exceeded in any video mode.

Contact an Analog Devices, Inc., sales representative or a field applications engineer (FAE) for more information on package thermal performance.

ESD CAUTION



ESD (electrostatic discharge) sensitive device. Charged devices and circuit boards can discharge without detection. Although this product features patented or proprietary protection circuitry, damage may occur on devices subjected to high energy ESD. Therefore, proper ESD precautions should be taken to avoid performance degradation or loss of functionality.

PIN CONFIGURATION AND FUNCTION DESCRIPTIONS

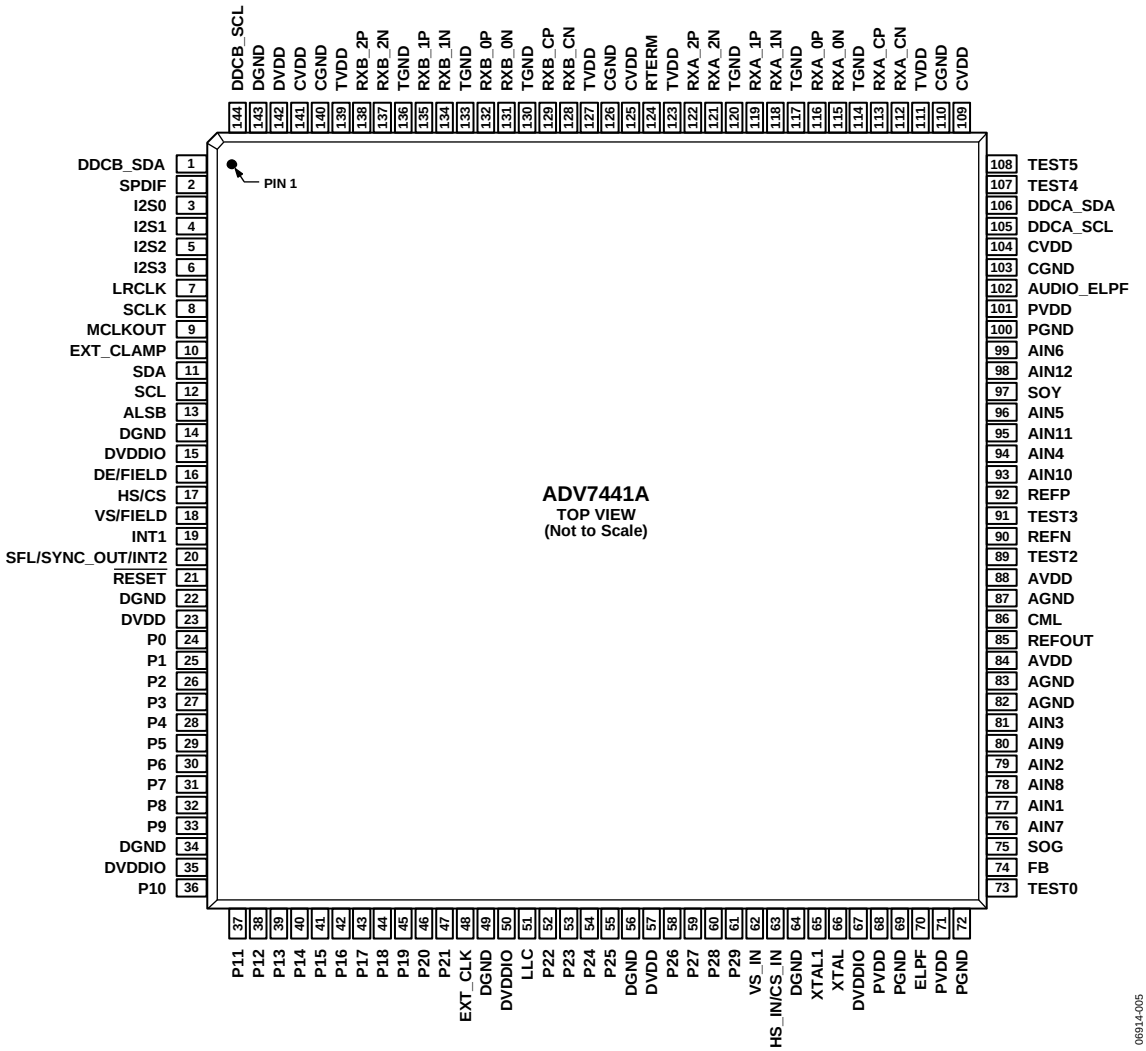

Figure 6. Pin Configuration

Table 7. Pin Function Descriptions

Pin No.	Mnemonic	Type[1]	Description
14, 22, 34, 49, 56, 64, 143	DGND	G	Digital Ground.
82, 83, 87	AGND	G	Analog Ground.
69, 72, 100	PGND	G	PLL Ground.
103, 110, 126, 140	CGND	G	Comparator Ground.
114, 117, 120, 130, 133, 136	TGND	G	Terminator Ground.
15, 35, 50, 67	DVDDIO	P	Digital I/O Supply Voltage (3.3 V).
23, 57, 142	DVDD	P	Digital Core Supply Voltage (1.8 V).
84, 88	AVDD	P	Analog Supply Voltage (1.8 V).
68, 71, 101	PVDD	P	Audio and Video PLL Supply Voltage (1.8 V).
104, 109, 125, 141	CVDD	P	HDMI Comparator, TMDS PLL, and Equalizer Supply Voltage (1.8 V).
111, 123, 127, 139	TVDD	P	Terminator Supply Voltage (3.3 V).
74	FB	I	Fast Blank. Fast switch overlay between CVBS and RGB analog signals.
73, 91, 108	TEST0, TEST3, TEST5	I	Test Pins. Do not connect.
89	TEST2	O	Test Pin. Do not connect.

Pin No.	Mnemonic	Type[1]	Description
107	TEST4	I/O	Test Pin. Do not connect.
77, 79, 81, 94, 96, 99, 76, 78, 80, 93, 95, 98	AIN1 to AIN12	I	Analog Video Input Channels.
24 to 33, 36 to 47, 52 to 55, 58 to 61	P0 to P29	O	Video Pixel Output Port.
19	INT1	O	Interrupt Signal. Can be active low or active high. The set of events that triggers an interrupt is under user control.
20	SFL/SYNC_OUT/INT2	O	Subcarrier Frequency Lock (SFL). Contains a serial output stream that can be used to lock the subcarrier frequency when this decoder is connected to any Analog Devices digital video encoder. Sliced Synchronization Output Signal (SYNC_OUT). Available only in CP mode. Interrupt Signal (INT2).
17	HS/CS	O	Horizontal Synchronization Output Signal (HS). Output by the SDP and CP. Composite Synchronization (CS). A single signal containing both horizontal and vertical synchronization pulses.
18	VS/FIELD	O	Vertical Synchronization Output Signal (VS). Output by the SDP and CP. Field Synchronization Output Signal (FIELD). Field synchronization output signal in all interlaced video modes.
16	DE/FIELD	O	Data Enable Signal (DE). Indicates active pixel data. Field Synchronization Output Signal (FIELD). Field synchronization output signal in all interlaced video modes.
11	SDA	I/O	I^2C Port Serial Data Input/Output Pin. SDA is the data line for the control port.
12	SCL	I	I^2C Port Serial Clock Input. (Maximum clock rate of 400 kHz.) SCL is the clock line for the control port.
13	$\overline{\text{ALSB}}$	I	This pin sets the second LSB of the slave address for each ADV7441A register map.
21	$\overline{\text{RESET}}$	I	System Reset Input. Active low. A minimum low reset pulse width of 5 ms is required to reset the ADV7441A circuitry.
51	LLC	O	Line-Locked Output Clock for Pixel Data. Range is 13.5 MHz to 170 MHz.
65	XTAL1	O	This pin should be connected to the 28.63636 MHz crystal or left as a no connect if an external 3.3 V, 28.63636 MHz clock oscillator source is used to clock the ADV7441A. In crystal mode, the crystal must be a fundamental crystal.
66	XTAL	I	Input Pin for the 28.63636 MHz Crystal. This pin can be overdriven by an external 3.3 V 28.63636 MHz clock oscillator source to clock the ADV7441A.
70	ELPF	O	The recommended external loop filter must be connected to this ELPF pin.
102	AUDIO_ELPF	O	The recommended external loop filter must be connected to this AUDIO_ELPF pin.
85	REFOUT	O	Internal Voltage Reference Output.
86	CML	O	Common-Mode Level for the Internal ADCs.
90	REFN	O	Internal Voltage Reference Output.
92	REFP	O	Internal Voltage Reference Output.
63	HS_IN/CS_IN	I	HS Input Signal. Used in analog mode for 5-wire timing mode. CS Input Signal. Used in analog mode for 4-wire timing mode. For optimal performance, a 100 Ω series resistor is recommended on the HS_IN/CS_IN pin.
62	VS_IN	I	VS Input Signal. Used in analog mode for 5-wire timing mode. For optimal performance, a 100 Ω series resistor is recommended on the VS_IN pin.
75	SOG	I	Synchronization-on-Green Input. This pin is used in embedded synchronization mode.
97	SOY	I	Synchronization-on-Luma Input. This pin is used in embedded synchronization mode.
112	RXA_CN	I	Digital Input Clock Complement of Port A in the HDMI Interface.
113	RXA_CP	I	Digital Input Clock True of Port A in the HDMI Interface.
115	RXA_0N	I	Digital Input Channel 0 Complement of Port A in the HDMI Interface.
116	RXA_0P	I	Digital Input Channel 0 True of Port A in the HDMI Interface.
118	RXA_1N	I	Digital Input Channel 1 Complement of Port A in the HDMI Interface.
119	RXA_1P	I	Digital Input Channel 1 True of Port A in the HDMI Interface.
121	RXA_2N	I	Digital Input Channel 2 Complement of Port A in the HDMI Interface.
122	RXA_2P	I	Digital Input Channel 2 True of Port A in the HDMI Interface.

Pin No.	Mnemonic	Type[1]	Description
128	RXB_CN	I	Digital Input Clock Complement of Port B in the HDMI Interface.
129	RXB_CP	I	Digital Input Clock True of Port B in the HDMI Interface.
131	RXB_0N	I	Digital Input Channel 0 Complement of Port B in the HDMI Interface.
132	RXB_0P	I	Digital Input Channel 0 True of Port B in the HDMI Interface.
134	RXB_1N	I	Digital Input Channel 1 Complement of Port B in the HDMI Interface.
135	RXB_1P	I	Digital Input Channel 1 True of Port B in the HDMI Interface.
137	RXB_2N	I	Digital Input Channel 2 Complement of Port B in the HDMI Interface.
138	RXB_2P	I	Digital Input Channel 2 True of Port B in the HDMI Interface.
106	DDCA_SDA	I/O	HDCP Slave Serial Data Port A.
1	DDCB_SDA	I/O	HDCP Slave Serial Data Port B.
105	DDCA_SCL	I	HDCP Slave Serial Clock Port A.
144	DDCB_SCL	I	HDCP Slave Serial Clock Port B.
2	SPDIF	O	SPDIF Digital Audio Output.
3	I2S0	O	I^2S Audio for Channel 1 and Channel 2.
4	I2S1	O	I^2S Audio for Channel 3 and Channel 4.
5	I2S2	O	I^2S Audio for Channel 5 and Channel 6.
6	I2S3	O	I^2S Audio for Channel 7 and Channel 8.
7	LRCLK	O	Data Output Clock for Left and Right Audio Channels.
8	SCLK	O	Audio Serial Clock Output.
9	MCLKOUT	O	Audio Master Clock Output.
10	EXT_CLAMP	I	External Clamp Signal Input for External Clock and Clamp Mode. This is an optional mode of operation for the ADV7441A.
48	EXT_CLK	I	Clock Input for External Clock and Clamp Mode. This is an optional mode of operation for the ADV7441A.
124	RTERM	I	Sets internal termination resistance. Connect this pin to TGND using a 500 Ω resistor.

[1] G = ground, P = power, I = input, O = output.

FUNCTIONAL OVERVIEW

The following overview provides a brief description of the functionality of the ADV7441A. More details are available in the Theory of Operation section.

ANALOG FRONT END

The analog front end of the ADV7441A provides four high quality 10-bit ADCs to enable 10-bit video decoding, a multiplexer with 12 analog input channels to enable multisource connection without the requirement of an external multiplexer, and four current and voltage clamp control loops to ensure that dc offsets are removed from the video signal. SCART functionality and standard definition RGB overlay with CVBS are controlled by the FB input.

HDMI RECEIVER

The ADV7441A is compatible with the HDMI specification. The ADV7441A supports all HDTV formats up to 1080p and all display resolutions up to UXGA (1600 × 1200 at 60 Hz).

The device includes the following features:

- Adaptive front-end equalization for HDMI operation with cable lengths up to 30 meters
- Synchronization conditioning for higher performance in strenuous conditions
- Audio mute for removing extraneous noise
- Programmable data island packet interrupt generator

STANDARD DEFINITION PROCESSOR PIXEL DATA OUTPUT MODES

The ADV7441A features the following SDP output modes:

- 8-/10-bit ITU-R BT.656 4:2:2 YCrCb with embedded time codes and/or HS, VS, and FIELD
- 16-/20-bit YCrCb 4:2:2 with embedded time codes and/or HS, VS, and FIELD
- 24-/30-bit YCrCb 4:4:4 with embedded time codes and/or HS, VS, and FIELD

COMPONENT PROCESSOR PIXEL DATA OUTPUT MODES

The ADV7441A features single data rate outputs as follows:

- 8-/10-bit 4:2:2 YCrCb for 525i and 625i
- 16-/20-bit 4:2:2 YCrCb for all standards
- 24-/30-bit 4:4:4 YCrCb/RGB for all standards

COMPOSITE AND S-VIDEO PROCESSING

The ADV7441A supports NTSC (M/J/4.43), PAL (B/D/I/G/H/M/N/Nc/60), and SECAM (B/D/G/K/L) standards for CVBS and S-Video formats. Superadaptive 2D, 5-line comb filters for NTSC and PAL provide superior chrominance and luminance separation for composite video.

The composite and S-Video processing functionalities also include fully automatic detection of switching among worldwide standards (PAL/NTSC/SECAM); automatic gain control (AGC) with white peak mode to ensure that the video is processed without compromising the video processing range; Adaptive Digital Line Length Tracking (ADLLT™); and proprietary architecture for locking to weak, noisy, and unstable sources from VCRs and tuners. The IF filter block compensates for high frequency luma attenuation due to the tuner SAW filter.

The ADV7441A also features chroma transient improvement (CTI) and luminance digital noise reduction (DNR), as well as teletext, closed captioning (CC), extended data service (EDS), and wide-screen signaling (WSS). It offers certified Macrovision® copy protection detection on composite and S-Video for all worldwide formats (PAL/NTSC/SECAM), and a copy generation management system (CGMS). Other features include 4× oversampling (54 MHz) for CVBS, S-Video, and YUV modes; line-locked clock output (LLC); vertical interval time codes (VITC); support for letterbox detection; a free-run output mode for stable timing when no video input is present; clocking from a single 28.63636 MHz crystal; and subcarrier frequency lock (SFL) output for downstream video encoders.

In addition, the device has color controls for hue, brightness, saturation, and contrast and controls for Cr and Cb offsets. The ADV7441A also incorporates a vertical blanking interval data processor and a video programming system (VPS) on the device.

The differential gain of the ADV7441A is 0.6% typical, and the differential phase is 0.3° typical.

COMPONENT VIDEO PROCESSING

The ADV7441A supports 525i, 625i, 525p, 625p, 720p, 1080i, 1080p, and many other HDTV formats. It provides automatic adjustments for gain (contrast) and offset (brightness), as well as manual adjustment controls. Furthermore, the ADV7441A not only supports analog component YPrPb/RGB video formats with embedded synchronization or with separate HS, VS, and CS, but also supports YCrCb-to-RGB and RGB-to-YCrCb conversions by any-to-any, 3 × 3 color-space conversion matrices.

In addition, the ADV7441A features brightness, saturation, and hue controls. Standard identification (STDI) enables detection of the component format at the system level, and a synchronization source polarity detector (SSPD) determines the source and polarity of the synchronization signals that accompany the input video.

Certified Macrovision copy protection detection is available on component formats (525i, 625i, 525p, and 625p).

When no video input is present, free-run output mode provides stable timing.

The ADV7441A supports user-defined pixel sampling for nonstandard video sources and arbitrary pixel sampling for nonstandard video sources.

RGB GRAPHICS PROCESSING

The ADV7441A provides 170 MSPS conversion rate support of RGB input resolutions up to 1600 × 1200 at 60 Hz (UXGA) and automatic or manual clamp and gain controls for graphics models.

The RGB graphics processing functionality features contrast and brightness controls, automatic detection of synchronization source and polarity by the SSPD block, standard identification enabled by the STDI block, and user-defined pixel sampling support for nonstandard video sources.

Additional RGB graphics processing features of the ADV7441A include the following:

- Sampling PLL clock with 500 ps p-p jitter at 170 MSPS.
- 32-phase DLL support of optimum pixel clock sampling.
- Color-space conversion of RGB to YCrCb and decimation to a 4:2:2 format for videocentric back-end IC interfacing.
- Data enable (DE) output signal supplied for direct connection to the HDMI/DVI transmitter IC.

GENERAL FEATURES

The ADV7441A features HS, VS, and FIELD output signals with programmable position, polarity, and width. It also includes programmable interrupt request output pins, INT1 and INT2.

The part offers low power consumption—1.8 V digital core, 1.8 V analog, and 3.3 V digital input/output—and a low power power-down mode.

The ADV7441A operates over a temperature range of −40°C to +85°C and is available in a 144-lead, 20 mm × 20 mm, RoHS-compliant LQFP.

THEORY OF OPERATION

ANALOG FRONT END

The ADV7441A analog front end comprises four 10-bit ADCs that digitize the analog video signal before applying it to the SDP or CP. The analog front end uses differential channels connected to each ADC to ensure high performance in mixed-signal applications.

The analog front end also includes a 12-channel input mux that enables multiple video signals to be applied to the ADV7441A. Current and voltage clamps are positioned in front of each ADC to ensure that the video signal remains within the range of the converter. Fine clamping of the video signals is performed downstream by digital fine clamping in either the CP or SDP.

The ADCs are configured to run in 4× oversampling mode when decoding composite and S-Video inputs. For component 525i, 625i, 525p, and 625p sources, 2× oversampling is performed, but 4× oversampling is available for component 525i and 625i. All other video standards are 1× oversampled. Oversampling the video signals reduces the cost and complexity of external antialiasing (AA) filters, with the additional benefit of increasing the signal-to-noise ratio (SNR).

The ADV7441A supports simultaneous processing of CVBS and RGB standard definition signals to enable SCART compatibility and overlay functionality. A combination of CVBS and RGB inputs can be mixed and output, as controlled by the I^2C registers and the FB pin.

HDMI RECEIVER

The HDMI receiver on the ADV7441A incorporates active equalization of the HDMI data signals. This equalization compensates for the high frequency losses inherent in HDMI and DVI cables, especially those with long lengths and high frequencies. Because the ADV7441A can provide equalization compensation for cable lengths up to 30 meters, it is capable of achieving robust receiver performance at even the highest HDMI data rates.

With the inclusion of HDCP, displays can receive encrypted video content. The HDMI interface of the ADV7441A allows for authentication of a video receiver, decryption of encoded data at the receiver, and renewability of that authentication during transmission as specified by the HDCP 1.3 protocol.

The HDMI receiver also offers advanced audio functionality. The receiver contains an audio mute controller that can detect a variety of selectable conditions that may result in audible extraneous noise in the audio output. Upon detection of these conditions, the audio data can be ramped to prevent audio clicks and pops.

STANDARD DEFINITION PROCESSOR

The SDP section is capable of decoding a large selection of baseband video signals in composite, S-Video, and YUV formats. The video standards supported by the SDP include PAL (B/D/I/G/H/60/M/N/Nc), NTSC (M/J/4.43), and SECAM (B/D/G/K/L). The ADV7441A automatically detects the video standard and processes it accordingly. The SDP has a five-line, superadaptive, 2D comb filter that provides superior chrominance and luminance separation when decoding a composite video signal. This highly adaptive filter automatically adjusts its processing mode according to the video standard and signal quality without requiring user intervention. The SDP has an IF filter block that compensates for attenuation in the high frequency luma spectrum due to a tuner SAW filter.

The SDP has specific luminance and chrominance parameter control for brightness, contrast, saturation, and hue.

The ADV7441A implements the patented ADLLT algorithm to track varying video line lengths from sources such as VCRs. ADLLT enables the ADV7441A to track and decode poor quality video sources, such as VCRs, and noisy sources, such as tuner outputs, VCD players, and camcorders. The SDP also contains a CTI processor. This processor increases the edge rate on chroma transitions, resulting in a sharper video image.

The SDP can process a variety of VBI data services, such as teletext, closed captioning (CC), wide-screen signaling (WSS), a video programming system (VPS), vertical interval time codes (VITC), a copy generation management system (CGMS), and an extended data service (XDS). The ADV7441A SDP section has a Macrovision 7.1 detection circuit that allows it to detect Type I, Type II, and Type III protection levels. The decoder is fully robust to all Macrovision signal inputs.

COMPONENT PROCESSOR (CP)

The component processor section is capable of decoding and digitizing a wide range of component video formats in any color space. Component video standards supported by the CP are 525i, 625i, 525p, 625p, 720p, 1080i, 1080p, 1250i, VGA up to UXGA at 60 Hz, and many other standards.

The CP section of the ADV7441A contains an AGC block. This block is followed by a digital clamp circuit that ensures that the video signal is clamped to the correct blanking level. Automatic adjustments within the CP include gain (contrast) and offset (brightness); however, manual adjustment controls are also supported. If no embedded synchronization is present, the video gain can be set manually.

A fully programmable, any-to-any, 3 × 3 color-space converter is placed before the CP section. This enables YPrPb-to-RGB and RGB-to-YCrCb conversions. Many other standards of color space can be implemented using the color-space converter.

A second fully programmable, any-to-any, 3 × 3 color-space converter is placed in the back end of the CP core. This color-space converter features advanced color controls, such as contrast, saturation, brightness, and hue controls.

The output section of the CP is highly flexible. It can be configured in single data rate (SDR) mode with one data packet per clock cycle. In SDR mode, a 16-/20-bit 4:2:2 or 24-/30-bit 4:4:4 output is possible. In these modes, HS/CS, VS/FIELD, and DE/FIELD (where applicable) timing reference signals are provided.

The CP section contains circuitry to enable the detection of Macrovision-encoded YPrPb signals for 525i, 625i, 525p, and 625p. It is designed to be fully robust when decoding these types of signals.

VBI DATA PROCESSOR

VBI extraction of CGMS data is performed by the VBI data processor (VDP) section of the AD7441A for interlaced, progressive, and high definition scanning rates. The data extracted is read back over the I^2C interface.

For more detailed product information about the ADV7441A, contact a local Analog Devices sales representative or field applications engineer (FAE).

PIXEL OUTPUT FORMATTING

Note that unused pins of the pixel output port are driven with a low voltage.

Table 8. Standard Definition Pixel Port Modes (P19 to P0)

			Data Port Pins P[19:0]																			
Processor	**Mode**	**Format**	**19**	**18**	**17**	**16**	**15**	**14**	**13**	**12**	**11**	**10**	**9**	**8**	**7**	**6**	**5**	**4**	**3**	**2**	**1**	**0**
SDP	Mode 1	Video output 8-bit 4:2:2	YCrCb[7:0]																			
SDP	Mode 2	Video output 10-bit 4:2:2	YCrCb[9:0]																			
SDP	Mode 3	Video output 16-bit 4:2:2	Y[7:0]										CrCb[7:0]									
SDP	Mode 4	Video output 20-bit 4:2:2	Y[9:0]										Cb[9:0]									
SDP	Mode 5	Video output 24-bit 4:4:4	Y[7:0]										Cb[7:0]									
SDP	Mode 6	Video output 30-bit 4:4:4	Y[9:0]										Cb[9:0]									

Table 9. Standard Definition Pixel Port Modes (P29 to P20)

			Data Port Pins P[29:20]									
Processor	**Mode**	**Format**	**29**	**28**	**27**	**26**	**25**	**24**	**23**	**22**	**21**	**20**
SDP	Mode 1	Video output 8-bit 4:2:2										
SDP	Mode 2	Video output 10-bit 4:2:2										
SDP	Mode 3	Video output 16-bit 4:2:2										
SDP	Mode 4	Video output 20-bit 4:2:2										
SDP	Mode 5	Video output 24-bit 4:4:4	Cr[7:0]									
SDP	Mode 6	Video output 30-bit 4:4:4	Cr[9:0]									

Table 10. Component Processor Pixel Output Pin Map (P19 to P0)

Processor[1]	Mode	Format	Output of Data Port Pins P[19:0]																			
			19	18	17	16	15	14	13	12	11	10	9	8	7	6	5	4	3	2	1	0
CP	Mode 1	Video output 8-bit 4:2:2[2]	YCrCb[7:0]																			
CP	Mode 2	Video output 10-bit 4:2:2[2]	YCrCb[9:0]																			
CP	Mode 3	Video output 12-bit 4:2:2[2]	YCrCb[11:2]																			
CP	Mode 4	Video output 12-bit 4:2:2[2]	YCrCb[11:4]																			
CP	Mode 5	Video output 12-bit 4:2:2[2]	YCrCb[11:4]										YCrCb[3:0]									
CP	Mode 6	Video output 16-bit 4:2:2[3, 4]	CHA[7:0] (default data is Y[7:0])										CHB/CHC[7:0] (default data is Cr/Cb[7:0])									
CP	Mode 7	Video output 20-bit 4:2:2[3, 4]	CHA[9:0] (default data is Y[9:0])										CHB/CHC[9:0] (default data is Cr/Cb[9:0])									
CP	Mode 8	Video output 20-bit 4:2:22[3, 4]	CHA[9:2] (default data is Y[9:2])										CHB/CHC[9:2] (default data is Cr/Cb[9:2])									
CP	Mode 9	Video output 24-bit 4:2:2[3, 4]	Y[11:2]										CrCb[11:2]									
CP	Mode 10	Video output 24-bit 4:2:2[3, 4]	Y[11:4]										CrCb[11:4]									
CP	Mode 11	Video output 24-bit 4:2:2[3, 4]	Y[11:4]										Y[3:0]				CrCb[3:0]					
CP	Mode 12	Video output 24-bit 4:4:4[3, 4]	CHA[7:0] (default data is G[7:0] or Y[7:0])										CHB[7:0] (default data is R[7:0] or Cr[7:0])									
CP	Mode 13	Video output 24-bit 4:4:4[3, 4]	CHA[7:0] (default data is G[7:0] or Y[7:0])										CHC[7:0] (default data is B[7:0] or Cb[7:0])									
CP	Mode 14	Video output 24-bit 4:4:4[3, 4]	CHC[7:0] (default data is B[7:0] or Cb[7:0])										CHA[7:0] (default data is G[7:0] or Y[7:0])									
CP	Mode 15	Video output 24-bit 4:4:4[3, 4]	CHC[7:0] (default data is B[7:0] or Cb[7:0])										CHB[7:0] (default data is R[7:0] or Cr[7:0])									
CP	Mode 16	Video output 30-bit 4:4:4[3, 4]	CHA[9:0] (default data is G[9:0] or Y[9:0])										CHB[9:0] (default data is R[9:0] or Cr[9:0])									
CP	Mode 17	Video output 30-bit 4:4:4[3, 4]	CHA[9:0] (default data is G[9:0] or Y[9:0])										CHC[9:0] (default data is B[9:0] or Cb[9:0])									
CP	Mode 18	Video output 30-bit 4:4:4[3, 4]	CHC[9:0] (default data is B[9:0] or Cb[9:0])										CHA[9:0] (default data is G[9:0] or Y[9:0])									
CP	Mode 19	Video output 30-bit 4:2:2[3, 4]	CHC[9:0] (default data is B[9:0] or Cb[9:0])										CHB[9:0] (default data is R[9:0] or Cr[9:0])									

[1] The CP processor uses the digitizer or HDMI as input.
[2] Maximum pixel clock rate of 54 MHz.
[3] Maximum pixel clock rate of 170 MHz for analog digitizer.
[4] Maximum pixel clock rate of 165 MHz for HDMI.

Table 11. Component Processor Pixel Output Pin Map (P29 to P20)

Processor[1]	Mode	Format	Output of Data Port Pins P[29:20]									
			29	28	27	26	25	24	23	22	21	20
CP	Mode 1	Video output 8-bit 4:2:2[2]										
CP	Mode 2	Video output 10-bit 4:2:2[2]										
CP	Mode 3	Video output 12-bit 4:2:2[2]							YCrCb[1:0]			
CP	Mode 4	Video output 12-bit 4:2:2[2]					YCrCb[3:0]					
CP	Mode 5	Video output 12-bit 4:2:2[2]										
CP	Mode 6	Video output 16-bit 4:2:2[3, 4]										
CP	Mode 7	Video output 20-bit 4:2:2[3, 4]										
CP	Mode 8	Video output 20-bit 4:2:2[3, 4]	Y[1:0]		CrCb[1:0]							
CP	Mode 9	Video output 24-bit 4:2:2[3, 4]			CrCb[1:0]				Y[1:0]			
CP	Mode 10	Video output 24-bit 4:2:2[3, 4]	CrCb[3:0]				Y[3:0]					
CP	Mode 11	Video output 24-bit 4:2:2[3, 4]	CrCb[11:4]									
CP	Mode 12	Video output 24-bit 4:4:4[3, 4]	CHC[7:0] (for example, B[7:0] or Cb[7:0])									
CP	Mode 13	Video output 24-bit 4:4:4[3, 4]	CHB[7:0] (for example, R[7:0] or Cr[7:0])									
CP	Mode 14	Video output 24-bit 4:4:4[3, 4]	CHB[7:0] (for example, R[7:0] or Cr[7:0])									
CP	Mode 15	Video output 24-bit 4:4:4[3, 4]	CHA[7:0] (for example, G[7:0] or Y[7:0])									
CP	Mode 16	Video output 30-bit 4:4:4[3, 4]	CHC[9:0] (for example, B[9:0] or Cb[9:0])									
CP	Mode 17	Video output 30-bit 4:4:4[3, 4]	CHB[9:0] (for example, R[9:0] or Cr[9:0])									
CP	Mode 18	Video output 30-bit 4:4:4[3, 4]	CHB[9:0] (for example, R[9:0] or Cr[9:0])									
CP	Mode 19	Video output 30-bit 4:2:2[3, 4]	CHA[9:0] (for example, G[9:0] or Y[9:0])									

[1] The CP processor uses the digitizer or HDMI as input.
[2] Maximum pixel clock rate of 54 MHz.
[3] Maximum pixel clock rate of 170 MHz for analog digitizer.
[4] Maximum pixel clock rate of 165 MHz for HDMI.

REGISTER MAP ARCHITECTURE

The ADV7441A registers are controlled via a 2-wire serial (I^2C-compatible) interface. The ADV7441A has eight maps, each with a unique I^2C address. The state of the ALSB pin (Pin 13) sets Bit 2 of each register map address in Table 12.

Table 12. Register Map Addresses

Register Map	Default Address with ALSB = Low	Default Address with ALSB = High	Programmable Address	Location Where Address Can Be Programmed
User Map	0x40	0x42	Not programmable	N/A
User Map 1	0x44	0x46	Programmable	User Map 2, Register 0xEB
User Map 2	0x60	0x62	Programmable	User Map, Register 0x0E
VDP Map	0x48	0x4A	Programmable	User Map 2, Register 0xEC
Reserved Map	0x4C	0x4E	Programmable	User Map 2, Register 0xEA
HDMI Map	0x68	0x6A	Programmable	User Map 2, Register 0xEF
Repeater KSV Map	0x64	0x66	Programmable	User Map 2, Register 0xED
EDID Map	0x6C	0x6E	Programmable	User Map 2, Register 0xEE

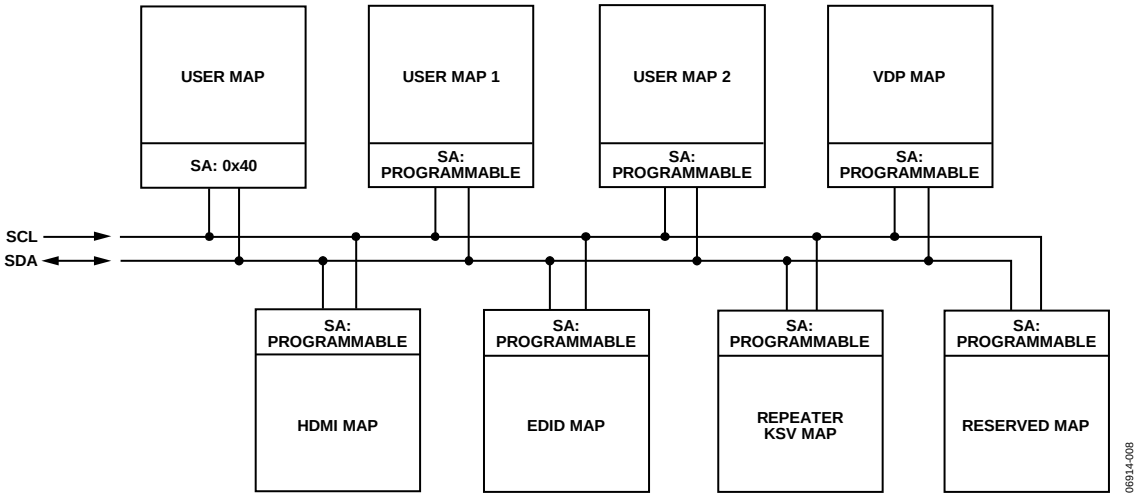

Figure 7. Register Map Access Through the Main I^2C Port

TYPICAL CONNECTION DIAGRAM

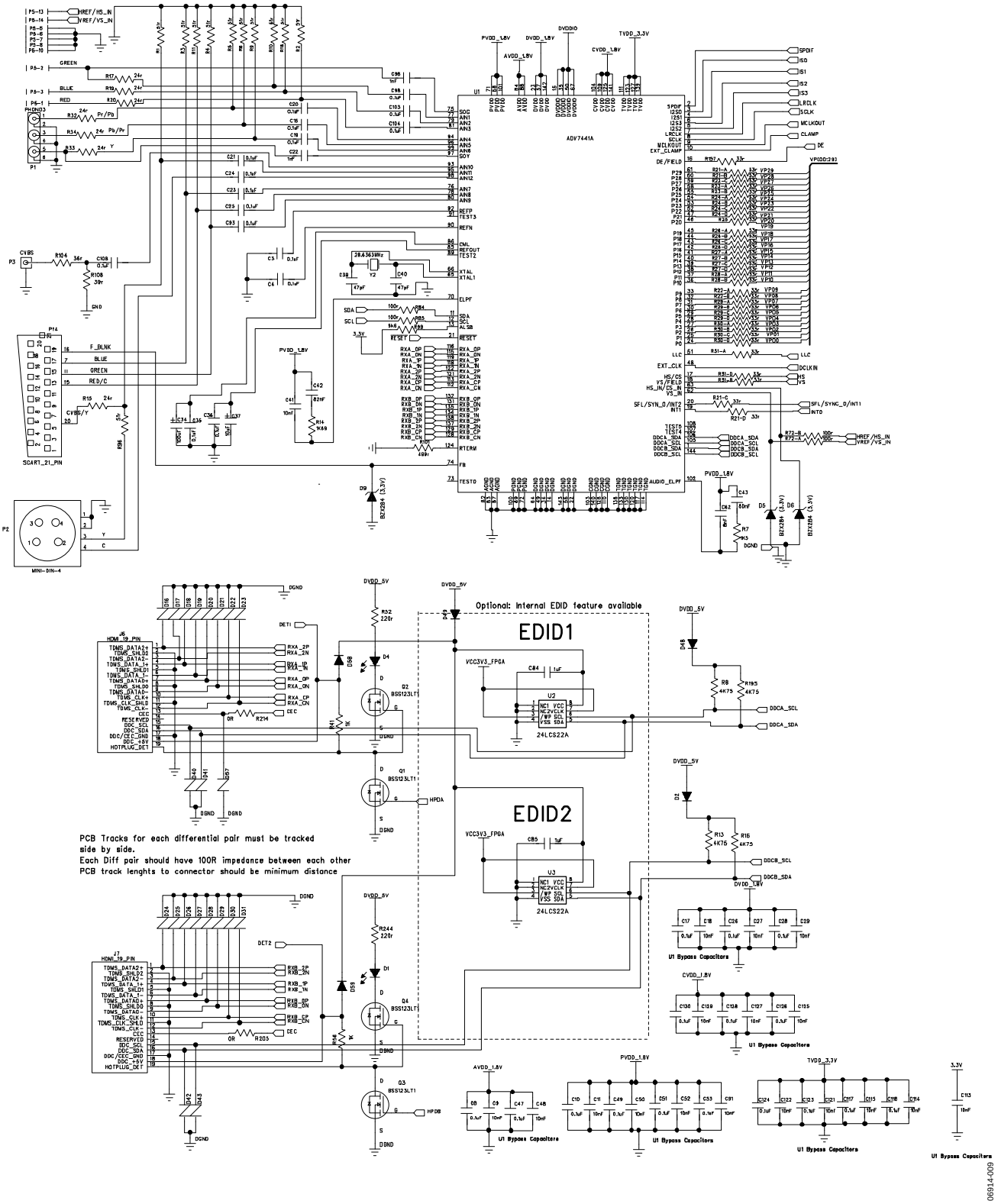

Figure 8. Typical Connection Diagram

RECOMMENDED EXTERNAL LOOP FILTER COMPONENTS

Note that the external loop filter components for the ELPF and AUDIO_ELPF pins should be placed as close as possible to the respective pins. The recommended component values are specified in Figure 9 and Figure 10.

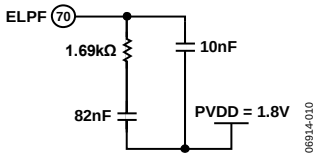

Figure 9. ELPF Components

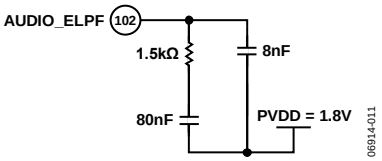

Figure 10. AUDIO_ELPF Components

ADV7441A EVALUATION PLATFORM

Analog Devices has developed an advanced TV (ATV) evaluation platform for the ADV7441A decoder. The evaluation platform consists of a motherboard and two daughterboards. The motherboard features a Xilinx FPGA for digital processing and muxing functions. The motherboard also features three AD9742 devices (12-bit DACs) from Analog Devices. This allows the user to drive a VGA monitor with just the motherboard and front-end board.

The back end of the platform can be connected to a specially developed video output board from Analog Devices. This modular board features an Analog Devices encoder and an Analog Devices HDMI transmitter.

The front end of the platform consists of an ADV7441 evaluation board (EVAL-ADV7441AFEZ_1). This evaluation board contains an ADV7441A decoder (see Table 13 for details). The evaluation board feeds the digital outputs from the ADV7441A decoder to the FPGA on the motherboard.

Table 13. Front-End Modular Board Details

Front-End Modular Board Model	On-Board Decoder	HDCP License Required
EVAL-ADV7441AFEZ_1	ADV7441ABSTZ-170	Yes

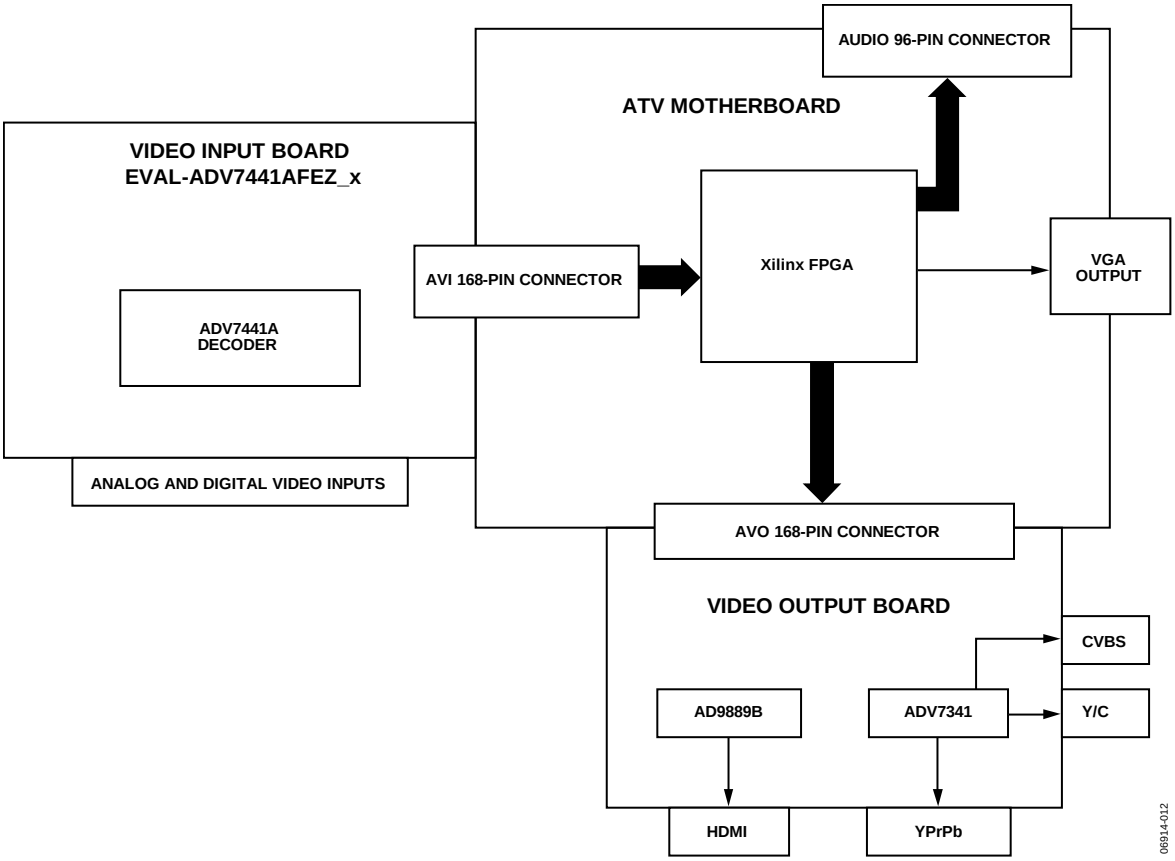

Figure 11. Functional Block Diagram of Evaluation Platform

OUTLINE DIMENSIONS

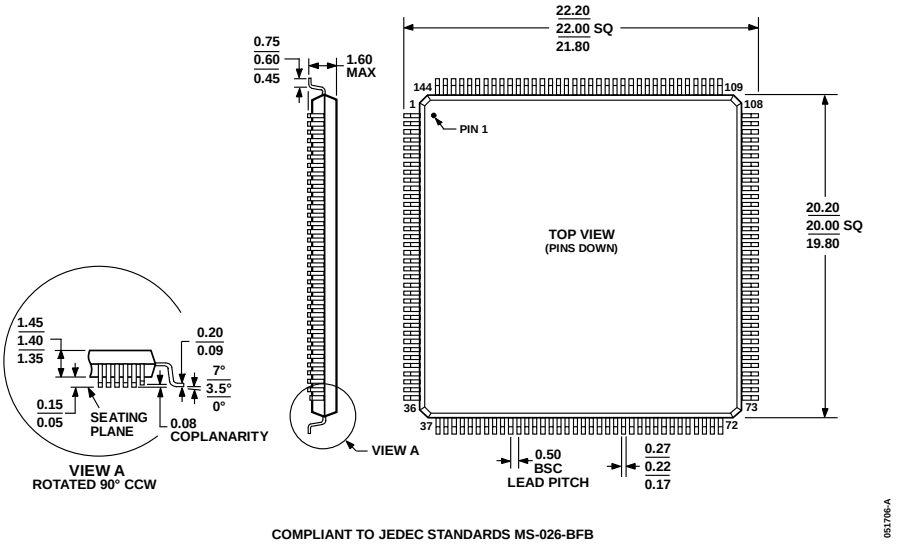

Figure 12. 144-Lead Low Profile Quad Flat Package [LQFP]
(ST-144)
Dimensions shown in millimeters

ORDERING GUIDE

Model[1]	Notes	Temperature Range	Package Description	Package Option
ADV7441ABSTZ-170	2	−40°C to +85°C	144-Lead Low Profile Quad Flat Package [LQFP]	ST-144
ADV7441ABSTZ-110	2	−40°C to +85°C	144-Lead Low Profile Quad Flat Package [LQFP]	ST-144
ADV7441ABSTZ-5P	3, 4	−40°C to +85°C	144-Lead Low Profile Quad Flat Package [LQFP]	ST-144
EVAL-ADV7441AFEZ_1	2, 5, 6		Front-End Evaluation Board	

[1] Z = RoHS Compliant Part.
[2] This part is programmed with internal HDCP keys. Customers must have HDCP adopter status (consult Digital Content Protection, LLC, for licensing requirements) to purchase any components with internal HDCP keys.
[3] Speed grade: 5 = 170 MHz. HDCP functionality: P = no HDCP functionality (professional version).
[4] Professional version for non-HDCP encrypted applications. Purchaser is not required to be an HDCP adopter.
[5] Front-end board for the ATV evaluation platform, fitted with ADV7441ABSTZ-170 decoder. See the ADV7441A Evaluation Platform section for details on the evaluation platform.
[6] An ATV motherboard is also required to process the ADV7441A digital outputs and achieve video output. An ATV video output board is optional to evaluate performance through an HDMI Tx and video encoder.

NOTES

NOTES

NOTES

I²C refers to a communications protocol originally developed by Phillips Semiconductors (now NXP Semiconductors).

HDMI, the HDMI Logo, and High-Definition Multimedia Interface are trademarks or registered trademarks of HDMI Licensing LLC in the United States and other countries.

©2007–2012 Analog Devices, Inc. All rights reserved. Trademarks and registered trademarks are the property of their respective owners.
D06914-0-2/12(H)