Integrated Video Decoder and HDMI Receiver

Data Sheet

ADV7482

FEATURES

- Analog input
  - Worldwide NTSC/PAL/SECAM color demodulation support with autodetection
  - One 10-bit ADC, 4× oversampling for CVBS, Y/C, and YPbPr
  - 8 analog video input channels with on-chip antialiasing filter
  - Fully differential, pseudo differential, and single-ended CVBS video input support
  - STB diagnostics on differential video inputs
  - CVBS (composite), Y/C (S-Video), and YPbPr (component) video input support
  - Fast switching capability between analog inputs
  - Adaptive contrast enhancement (ACE)
  - Excellent common-mode noise rejection capabilities
  - Rovi (Macrovision) copy protection detection
  - Up to 4 V common-mode input range solution
  - Vertical blanking interval (VBI) data slicer
- High-Definition Multimedia Interface (HDMI) capable receiver
  - HDCP authentication and decryption support
  - 162 MHz maximum pixel clock frequency, allowing HDTV formats up to 1080p and display resolutions up to UXGA (1600 × 1200 at 60 Hz)
  - HDCP repeater support, up to 25 KSVs supported
  - Integrated CEC controller, CEC 1.4 compatible
  - Adaptive TMDS equalizer
  - 5 V detect and Hot Plug assert
- Component video processor
  - Any-to-any 3 × 3 color space conversion (CSC) matrix
  - Contrast/brightness/hue/saturation video adjustment
  - Timing adjustments controls for horizontal sync (HS)/vertical sync (VS)/data enable (DE) timing
  - Video mute function
- Serial digital audio output interface
  - HDMI audio extraction support
  - Advanced audio muting feature
  - I²S-compatible, left justified and right justified audio output modes
  - 8-channel TDM output mode available
- 2 Mobile Industry Processor Interface (MIPI) Camera Serial Interface 2 (CSI-2) transmitters
  - 4-lane transmitter with 4 lanes, 2 lanes, and 1 lane muxing options for HDMI/SDP/digital input port sources
  - 1-lane transmitter for standard definition processor (SDP) sources
- 8-bit digital input/output port
- General
  - 2-wire serial microprocessor unit (MPU) interface (I²C compatible)
  - −40°C to +85°C temperature grade
  - 100-ball, 9 mm × 9 mm, RoHS-compliant CSP_BGA package
  - Qualified for automotive applications

APPLICATIONS

- Portable devices
- Automotive infotainment (head unit and rear seat entertainment systems)
- HDMI repeaters and video switches

FUNCTIONAL BLOCK DIAGRAM

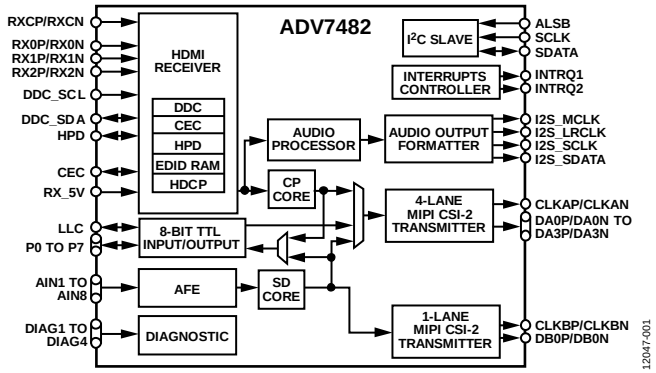

Figure 1.

Rev. 0 Document Feedback

Information furnished by Analog Devices is believed to be accurate and reliable. However, no responsibility is assumed by Analog Devices for its use, nor for any infringements of patents or other rights of third parties that may result from its use. Specifications subject to change without notice. No license is granted by implication or otherwise under any patent or patent rights of Analog Devices. Trademarks and registered trademarks are the property of their respective owners.

One Technology Way, P.O. Box 9106, Norwood, MA 02062-9106, U.S.A.
Tel: 781.329.4700

©2014 Analog Devices, Inc. All rights reserved.

Technical Support www.analog.com

TABLE OF CONTENTS

Features ... 1
Applications ... 1
Functional Block Diagram ... 1
Revision History ... 2
General Description ... 3
Detailed Functional Block Diagram ... 4
Specifications ... 5
Electrical Characteristics ... 5
Analog Video Specifications ... 7
MIPI Video Output Specifications ... 8
Analog Specifications ... 8
Timing Specifications ... 9
Absolute Maximum Ratings ... 12
Thermal Resistance ... 12
ESD Caution ... 12
Pin Configuration and Function Descriptions ... 13
Power Supply Recommendation ... 16
Power-Up Sequence ... 16
Power-Down Sequence ... 16
Thoery of Operation ... 17
HDMI Receiver ... 17
Component Processor ... 17
Analog Front End ... 17
Short to Battery Diagnostics ... 18
Standard Definition Processor ... 18
8-Bit Digital Input/Output Port ... 19
Audio Processing ... 19
MIPI CSI-2 Transmitters ... 19
Interrupts ... 19
Outline Dimensions ... 20
Ordering Guide ... 20
Automotive Products ... 20

REVISION HISTORY

6/14—Revision 0: Initial Version

GENERAL DESCRIPTION

The ADV7482 is an integrated video decoder and HDMI® receiver, targeted at connectivity enabled head units requiring a wired, uncompressed digital audio/video link from smartphones, and other consumer electronics devices to support streaming and integration of cloud-based multimedia content and applications into an automotive infotainment system.

The ADV7482 HDMI capable receiver supports a maximum pixel clock frequency of 162 MHz, allowing HDTV formats up to 1080p, and display resolutions up to UXGA (1600 × 1200 at 60 Hz). The device integrates a consumer electronics control (CEC) controller that supports the capability discovery and control (CDC) feature. The HDMI input port has dedicated 5 V detect and Hot Plug™ assert pins.

The HDMI receiver includes an adaptive transition minimized differential signaling (TMDS) equalizer that ensures robust operation of the interface with long cables.

The ADV7482 contains a component processor (CP) that processes the video signals from the HDMI receiver. It provides features such as contrast, brightness, and saturation adjustments, as well as free run and timing adjustment controls for HS/VS/DE timing.

The ADV7482 analog front end (AFE) comprises a single high speed, 10-bit analog-to-digital converter (ADC) that digitizes the analog video signal before applying it to the SDP.

The eight analog video inputs can accept single-ended, pseudo differential, and fully differential composite video signals, as well as S-Video and YPbPr video signals, supporting a wide range of consumer and automotive video sources.

Short to battery (STB) events can be detected on differential input video signals. STB protection is provided by ac coupling the input video signals. The ADV7482, in combination with an external resistor divider, provides a common-mode input range of 4 V, enabling the removal of large signal common-mode transients present on the video lines.

The automatic gain control (AGC) and clamp restore circuitry allow an input video signal up to 1.0 V p-p at the analog video input pins of the ADV7482. Alternatively, the AGC and clamp restore circuitry can be bypassed for manual settings.

The SDP of the ADV7482 is capable of decoding a large selection of analog baseband video signals in composite, S-Video, and component formats. The SDP supports worldwide NTSC, PAL, and SECAM standards.

The ADV7482 features an 8-bit digital input/output port, supporting input and output video resolutions up to 720p/1080i in both the 8-bit interleaved 4:2:2 SDR and DDR modes.

To enable glueless interfacing of these video input sources to the latest generation of infotainment system on chips (SoCs), the ADV7482 features two MIPI® CSI-2 transmitters. The four-lane transmitter provides four data lanes, two data lanes, and one data lane muxing options, and can be used to output video from the HDMI receiver, the SDP, and the digital input port. The single-lane transmitter can be used to output video from the SDP only.

The ADV7482 offers a flexible audio output port for audio data extracted from HDMI streams. The HDMI receiver has advanced audio functionality, such as a mute controller that prevents audible extraneous noise in the audio output. Additionally, the ADV7482 can be set to output time division multiplexing (TDM) serial audio, which allows the transmission of eight multiplexed serial audio channels on a single audio output interface port.

The ADV7482 is programmed via a 2-wire, serial, bidirectional port (I^2C compatible).

Fabricated in an advanced CMOS process, the ADV7482 is available in a 9 mm × 9 mm, RoHS-compliant, 100-ball CSP_BGA package and is specified over the −40°C to +85°C temperature range.

The ADV7482 is offered in automotive and industrial versions.

DETAILED FUNCTIONAL BLOCK DIAGRAM

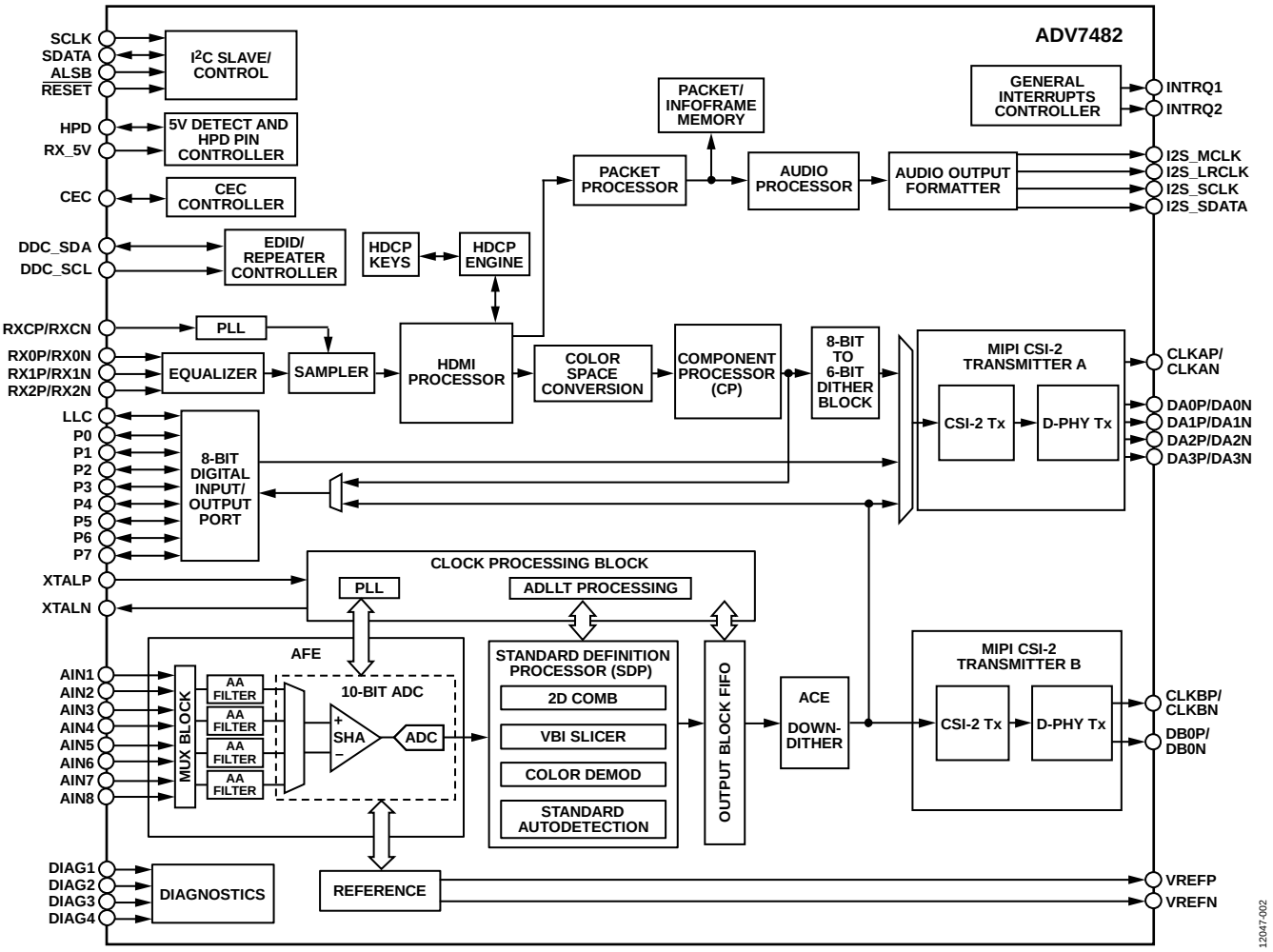

Figure 2.

SPECIFICATIONS

ELECTRICAL CHARACTERISTICS

AVDD = 1.71 V to 1.89 V, DVDD = 1.71 V to 1.89 V, PVDD = 1.71 V to 1.89 V, MVDD = 1.71 V to 1.89 V, CVDD = 1.71 V to 1.89 V, DVDDIO = 3.14 V to 3.46 V, and TVDD = 3.14 V to 3.46 V, specified at operating temperature range, unless otherwise noted.

Table 1.

Parameter	Symbol	Test Conditions/Comments	Min	Typ	Max	Unit
STATIC PERFORMANCE						
Resolution (Each ADC)	N				10	Bits
Integral Nonlinearity	INL	CVBS mode		2		LSB
Differential Nonlinearity	DNL	CVBS mode		±0.6		LSB
DIGITAL INPUTS[1]		SCLK, SDATA, $\overline{\text{RESET}}$, ALSB, LLC, and P0 to P7				
Input High Voltage	V_{IH}	DVDDIO = 3.14 V to 3.46 V	2			V
Input Low Voltage	V_{IL}	DVDDIO = 3.14 V to 3.46 V			0.8	V
Input Leakage Current	I_{IN}		−10		+10	µA
Input Capacitance[2]	C_{IN}				10	pF
CRYSTAL INPUT						
Input High Voltage	V_{IH}	XTALP	1.2			V
Input Low Voltage	V_{IL}	XTALP			0.4	V
DIGITAL OUTPUTS[1]		LLC, P0 to P7, I2S_MCLK, I2S_SCLK, I2S_LRCLK, I2S_SDATA, SDATA, INTRQ1 and INTRQ2 (when configured to drive when active)				
Output High Voltage	V_{OH}	DVDDIO = 3.14 V to 3.46 V and I_{SOURCE} = 0.4 mA	2.4			V
Output Low Voltage	V_{OL}	DVDDIO = 3.14 V to 3.46 V and I_{SINK} = 3.2 mA			0.4	V
High Impedance Leakage Current	I_{LEAK}			10		µA
Output Capacitance[2]	C_{OUT}				20	pF
POWER REQUIREMENTS						
Digital Power Supply	D_{VDD}		1.71	1.8	1.89	V
HDMI Terminator Supply	T_{VDD}		3.14	3.3	3.46	V
HDMI Comparator Supply	C_{VDD}		1.71	1.8	1.89	V
PLL Power Supply	P_{VDD}		1.71	1.8	1.89	V
MIPI Transmitters Power Supply	M_{VDD}		1.71	1.8	1.89	V
Digital Input/Output Power Supply[1]	D_{VDDIO}	3.3 V operation	3.14	3.3	3.46	V
Analog Power Supply	A_{VDD}		1.71	1.8	1.89	V
CURRENT CONSUMPTION[1, 2, 3, 4]						
Digital Supply Current	I_{DVDD}				279	mA
Single-Ended CVBS Input				74.5		mA
Fully Differential and Pseudo Differential CVBS Input				74.7		mA
Y/C Input				71.3		mA
YPbPr Input				72.8		mA
HDMI Input				68.1		mA
8-Bit Digital Input				32.5		mA
HDMI Terminator Supply Current	I_{TVDD}				40	mA
Single-Ended CVBS Input				0.7		mA
Fully Differential and Pseudo Differential CVBS Input				0.7		mA
Y/C Input				0.7		mA
YPbPr Input				0.7		mA
HDMI Input				35		mA
8-Bit Digital Input				0.7		mA

Parameter	Symbol	Test Conditions/Comments	Min	Typ	Max	Unit
HDMI Comparator Supply Current	I_{CVDD}				92	mA
Single-Ended CVBS Input				0.1		mA
Fully Differential and Pseudo Differential CVBS Input				0.1		mA
Y/C Input				0.1		mA
YPbPr Input				0.1		mA
HDMI Input				63.9		mA
8-Bit Digital Input				0.1		mA
PLL Supply Current	I_{PVDD}				52	mA
Single-Ended CVBS Input				37.5		mA
Fully Differential and Pseudo Differential CVBS Input				37.5		mA
Y/C Input				37.7		mA
YPbPr Input				37.7		mA
HDMI Input				29.2		mA
8-Bit Digital Input				27.9		mA
MIPI Transmitters Supply Current	I_{MVDD}				77	mA
Single-Ended CVBS Input				23.3		mA
Fully Differential and Pseudo Differential CVBS Input				23.3		mA
Y/C Input				23.2		mA
YPbPr Input				23.2		mA
HDMI Input				45.7		mA
8-Bit Digital Input				38.1		mA
Digital Input/Output Supply Current	I_{DVDDIO}				78	mA
Single-Ended CVBS Input				0.2		mA
Fully Differential and Pseudo Differential CVBS Input				0.2		mA
Y/C Input				0.2		mA
YPbPr Input				0.2		mA
HDMI Input				3.6		mA
8-Bit Digital Input				0.2		mA
Analog Supply Current	I_{AVDD}				93	mA
Single-Ended CVBS Input				51.9		mA
Fully Differential and Pseudo Differential CVBS Input				70		mA
Y/C Input				63		mA
YPbPr Input				78.5		mA
HDMI Input				0.1		mA
8-Bit Digital Input				0.1		mA
POWER-DOWN CURRENTS[2, 5]						
Digital Supply	I_{DVDD_PD}			0.2		mA
HDMI Terminator Supply	I_{TVDD_PD}			0.4		mA
HDMI Comparator Supply	I_{CVDD_PD}			0.1		mA
PLL Supply	I_{PVDD_PD}			0.1		mA
MIPI Transmitters Supply	I_{MVDD_PD}			0.1		mA
Digital Input/Output Supply	I_{DVDDIO_PD}			0.2		mA
Analog Supply	I_{AVDD_PD}			0.1		mA
Total Power Dissipation in Power-Down Mode				4		mW

[1] The 8-bit digital input/output port is only available when the DVDDIO supply is between 3.14 V and 3.46 V.
[2] Guaranteed by lab characterization.
[3] Typical current consumption values are recorded with nominal voltage supply levels (including DVDDIO = 3.3 V), Philips test pattern, and at room temperature.
[4] Maximum current consumption values are recorded with maximum rated voltage supply levels (including DVDDIO = 3.46 V), MoireX video pattern for analog inputs, pseudorandom test pattern for digital inputs, and at worst-case temperature.
[5] Typical power-down current consumption values are recorded with nominal voltage supply levels (including DVDDIO = 3.3 V) at room temperature.

ANALOG VIDEO SPECIFICATIONS

AVDD = 1.71 V to 1.89 V, DVDD = 1.71 V to 1.89 V, PVDD = 1.71 V to 1.89 V, MVDD = 1.71 V to 1.89 V, CVDD = 1.71 V to 1.89 V, DVDDIO = 3.14 V to 3.46 V, and TVDD = 3.14 V to 3.46 V, specified at operating temperature range, unless otherwise noted.

Table 2.

Parameter	Symbol	Test Conditions/Comments	Min	Typ	Max	Unit
NONLINEAR SPECIFICATIONS[1, 2]						
Differential Phase	DP	CVBS input, modulated five-step		0.9		Degrees
Differential Gain	DG	CVBS input, modulated five-step		0.5		%
Luma Nonlinearity	LNL	CVBS input, five-step		2.0		%
NOISE SPECIFICATIONS						
Signal-to-Noise Ratio, Unweighted[2]	SNR	Luma ramp		57.1		dB
		Luma flat field		58		dB
Analog Front-End Crosstalk[3]				60		dB
Common-Mode Rejection Ratio[2, 4]	CMRR			73		dB
LOCK TIME SPECIFICATIONS						
Horizontal Lock Range[3]			−5		+5	%
Vertical Lock Range[3]			40		70	Hz
Subcarrier Lock Range[3]	f_{SC}			±1.3		kHz
Color Lock-In Time[3]				60		Lines
Synchronization Depth Range[3]			20		200	%
Color Burst Range[3]			5		200	%
Fast Switch Speed[2, 5]				100		ms

[1] These specifications apply to all CVBS input types, as well as to single-ended and differential CVBS inputs.
[2] Guaranteed by lab characterization.
[3] Guaranteed by design.
[4] The CMRR of this circuit design is critically dependent on the external resistor matching its inputs. This measurement was performed with 0.1% tolerant resistors, a common-mode voltage of 1 V, and a common-mode frequency of 10 kHz.
[5] The time it takes the ADV7482 to switch from one analog input (single ended or differential) to another, for example, switching from AIN1 to AIN2.

MIPI VIDEO OUTPUT SPECIFICATIONS

AVDD = 1.71 V to 1.89 V, DVDD = 1.71 V to 1.89 V, PVDD = 1.71 V to 1.89 V, MVDD = 1.71 V to 1.89 V, CVDD = 1.71 V to 1.89 V, DVDDIO = 3.14 V to 3.46 V, and TVDD = 3.14 V to 3.46 V, specified at operating temperature range, unless otherwise noted.

The ADV7482 MIPI CSI-2 transmitters conform to the MIPI D-PHY Version 1.00.00 specification by characterization. The clock lane of the ADV7482 remains in high speed (HS) mode even when the data lane enters low power (LP) mode. For this reason, some measurements on the clock lane that pertain to low power mode are not applicable. Unless otherwise stated, all high speed measurements were performed with the ADV7482 operating with a nominal 1 Gbps output data rate.

Table 3

Parameter	Symbol	Min	Typ	Max	Unit
UNIT INTERVAL[1]	UI	1		12.5	ns
DATA LANE LP Tx DC SPECIFICATIONS[2]					
Thevenin Output					
High Level	V_{OH}	1.1	1.2	1.3	V
Low Level	V_{OL}	−50	0	+50	mV
CLOCK LANE LP Tx DC SPECIFICATIONS[2]					
Thevenin Output					
High Level	V_{OH}	1.1	1.2	1.3	V
Low Level	V_{OL}	−50	0	+50	mV
DATA LANE HS Tx SIGNALING REQUIREMENTS					
High Speed Differential Voltage Swing	$\|V_1\|$	140	200	270	mV p-p
Differential Voltage Mismatch				10	mV
Single-Ended Output High Voltages				360	mV
Static Common-Mode Voltage Level		150	200	250	mV
CLOCK LANE HS Tx SIGNALING REQUIREMENTS					
High Speed Differential Voltage Swing	$\|V_2\|$	140	200	270	mV p-p
Differential Voltage Mismatch				10	mV
Single-Ended Output High Voltages				360	mV
Static Common-Mode Voltage Level		150	200	250	mV
HS Tx CLOCK TO DATA LANE TIMING REQUIREMENTS					
Data to Clock Skew		0.35 × UI		0.65 × UI	ns

[1] Guaranteed by design.
[2] These measurements were performed with C_{LOAD} = 50 pF.

ANALOG SPECIFICATIONS

AVDD = 1.71 V to 1.89 V, DVDD = 1.71 V to 1.89 V, PVDD = 1.71 V to 1.89 V, MVDD = 1.71 V to 1.89 V, CVDD = 1.71 V to 1.89 V, DVDDIO = 3.14 V to 3.46 V, and TVDD = 3.14 V to 3.46 V, specified at operating temperature range, unless otherwise noted.

Table 4.

Parameter	Test Conditions/Comments	Min	Typ	Max	Unit
CLAMP CIRCUITRY					
External Clamp Capacitor	Required by design		0.1		µF
Large Clamp					
Source Current			0.32		mA
Sink Current			0.32		mA
Fine Clamp					
Source Current			7		µA
Sink Current			7		µA

TIMING SPECIFICATIONS

AVDD = 1.71 V to 1.89 V, DVDD = 1.71 V to 1.89 V, PVDD = 1.71 V to 1.89 V, MVDD = 1.71 V to 1.89 V, CVDD = 1.71 V to 1.89 V, DVDDIO = 3.14 V to 3.46 V, and TVDD = 3.14 V to 3.46 V, specified at operating temperature range, unless otherwise noted.

Table 5.

Parameter	Symbol	Test Conditions	Min	Typ	Max	Unit
CLOCK AND CRYSTAL						
Nominal Frequency[1]		Required by design		28.63636		MHz
Frequency Stability[1]		Required by design			±50	ppm
Input LLC Clock Frequency Range[2, 3]		DVDDIO = 3.14 V to 3.46 V	13.5		148.5	MHz
Output LLC Clock Frequency Range[2, 3]		DVDDIO = 3.14 V to 3.46 V	13.5		148.5	MHz
I2S_SCLK Frequency[3]					12.288	MHz
I2S_MCLK Frequency[3]					24.576	MHz
I²C PORT						
SCLK Frequency					400	kHz
SCLK Minimum Pulse Width High	t_1		0.6			µs
SCLK Minimum Pulse Width Low	t_2		1.3			µs
Hold Time (Start Condition)	t_3		0.6			µs
Setup Time (Start Condition)	t_4		0.6			µs
SDATA Setup Time	t_5		100			ns
SCLK and SDATA Rise Times	t_6				300	ns
SCLK and SDATA Fall Times	t_7				300	ns
Setup Time (Stop Condition)	t_8			0.6		µs
$\overline{\text{RESET}}$ FEATURE						
$\overline{\text{RESET}}$ Pulse Width[1]			5			ms
8-BIT DIGITAL INPUT PORT[2]		DVDDIO = 3.14 V to 3.46 V				
LLC High Time[3]	t_{21}		45		55	% duty cycle
LLC Low Time[3]			45		55	% duty cycle
SDR and DDR Modes Setup Time	t_{22}	Data latched on rising edge	1			ns
SDR and DDR Modes Hold Time	t_{23}	Data latched on rising edge	1			ns
DDR Mode Setup Time	t_{24}	Data latched on falling edge	1			ns
DDR Mode Hold Time	t_{25}	Data latched on falling edge	1			ns
8-BIT DIGITAL OUTPUT PORT[2]		DVDDIO = 3.14 V to 3.46 V				
LLC High Time	t_{26}		40		60	% duty cycle
LLC Low Time			40		60	% duty cycle
SDR Modes Setup Time[4, 5]	t_{36}	At P0 to P7 output pin, data latched on rising edge	1.98			ns
SDR Modes Hold Time[4, 5]	t_{37}	At P0 to P7 output pin, data latched on rising edge	2.50			ns
DDR Modes Setup Time[4, 5]	t_{27}	At P0 to P7 output pin, data latched on rising edge	1.66			ns
DDR Modes Hold Time[4, 5]	t_{28}	At P0 to P7 output pin, data latched on rising edge	3.52			ns
DDR Mode Setup TIme[4, 5]	t_{29}	At P0 to P7 output pin, data latched on falling edge	1.71			ns
DDR Modes Hold Time[4, 5]	t_{30}	At P0 to P7 output pin, data latched on falling edge	3.17			ns

Parameter	Symbol	Test Conditions	Min	Typ	Max	Unit
I²S PORT, MASTER MODE						
I2S_SCLK High Time	t_{31}		45		55	% duty cycle
I2S_SCLK Low Time			45		55	% duty cycle
I2S_LRCLK Data Transition Time	t_{32}	End of valid data to I2S_SCLK falling edge			10	ns
	t_{33}	I2S_SCLK falling edge to start of valid data			10	ns
I2S_SDATA Data Transition Time	t_{34}	End of valid data to I2S_SCLK falling edge			5	ns
	t_{35}	I2S_SCLK falling edge to start of valid data			5	ns

[1] Required by design.
[2] The 8-bit digital input/output port is only available when the DVDDIO supply is between 3.14 V and 3.46 V.
[3] Guaranteed by design.
[4] These specifications only apply when the LLC_DLL_PHASE[4:0] (IO Map, Register 0x0C[4:0]) is set to 00000.
[5] Guaranteed by lab characterization.

Timing Diagrams

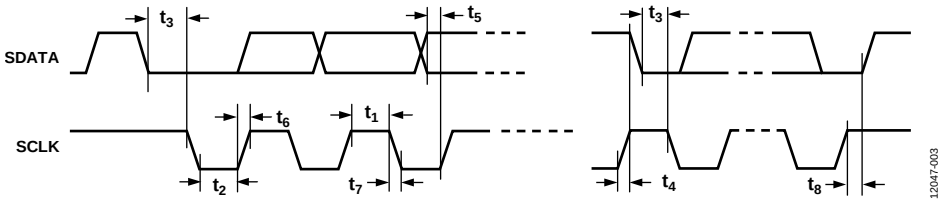

Figure 3. I²C Timing

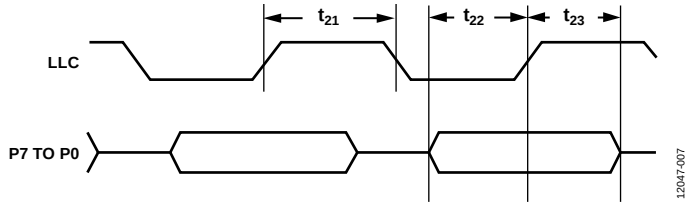

Figure 4. 8-Bit Digital Pixel Video Input, SDR Video Data Timing

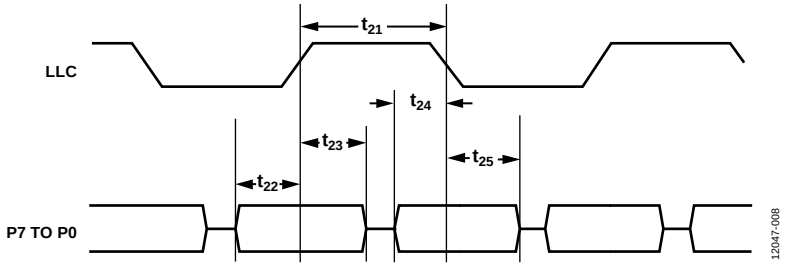

Figure 5. 8-Bit Digital Pixel Video Input, DDR Video Data Timing

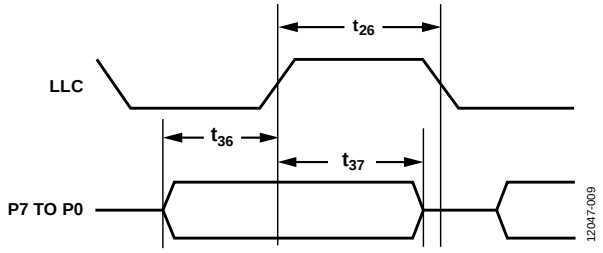

Figure 6. 8-Bit Digital Pixel Video Output, SDR Video Data Timing

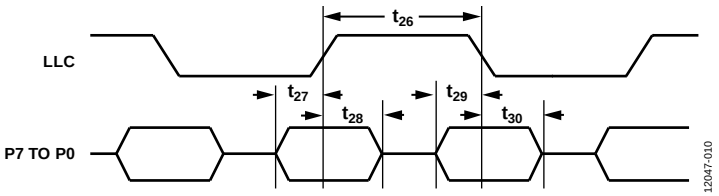

Figure 7. 8-Bit Digital Pixel Video Output, DDR Video Data Timing

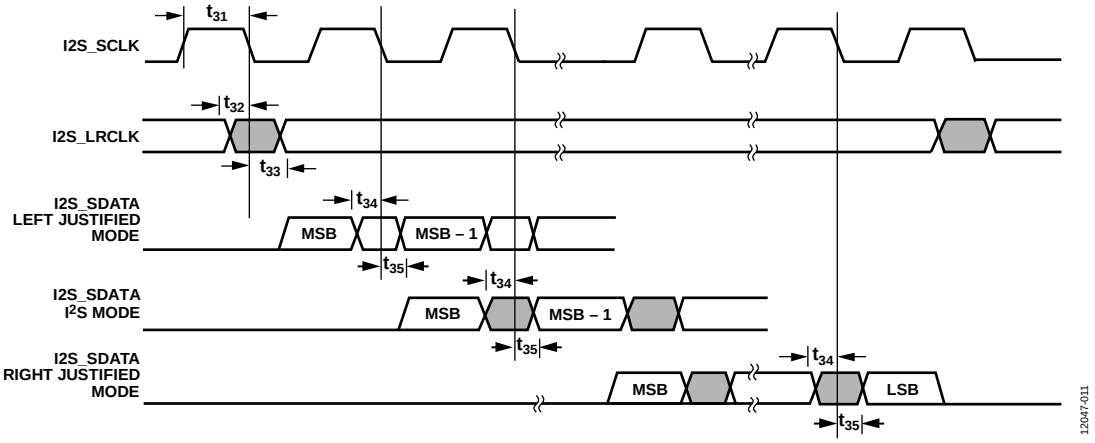

Figure 8. I²S Timing

ABSOLUTE MAXIMUM RATINGS

Table 6.

Parameter	Rating
TVDD, DVDDIO to GND	4 V
AVDD, PVDD, MVDD, DVDD, CVDD to GND	2.2 V
CVDD to DVDD	−0.3 V to +0.3 V
MVDD to DVDD	−0.3 V to +0.3 V
PVDD to DVDD	−0.3 V to +0.3 V
AVDD to DVDD	−0.3 V to +0.3 V
Digital Inputs Voltage to GND	GND − 0.3 V to DVDDIO + 0.3 V
Digital Outputs Voltage to GND	GND − 0.3 V to DVDDIO + 0.3 V
Analog Inputs to GND	−0.3 V to AVDD + 0.3 V
XTALN and XTALP to GND	−0.3 V to PVDD + 0.3 V
HDMI Digital Inputs Voltage to GND	−0.3 V to CVDD + 0.3 V
5 V Tolerant Inputs Voltage to GND[1, 2]	−0.3 V to +5.5 V
Maximum Junction Temperature (T_J max)	125°C
Storage Temperature Range	−65°C to +150°C
Infrared Reflow Soldering (20 sec)	260°C

[1] The following inputs are 3.3 V inputs but are 5 V tolerant: DDC_SCL, DDC_SDA, HPD, RX_5V, and CEC.
[2] The following inputs are 1.8 V inputs but are 5 V tolerant: DIAG1, DIAG2, DIAG3, and DIAG4.

Stresses at or above those listed under Absolute Maximum Ratings may cause permanent damage to the product. This is a stress rating only; functional operation of the product at these or any other conditions above those indicated in the operational section of this specification is not implied. Operation beyond the maximum operating conditions for extended periods may affect product reliability.

THERMAL RESISTANCE

To reduce power consumption when using the ADV7482, turn off unused sections of the device.

Due to printed circuit board (PCB) metal variation, and, therefore, variation in PCB heat conductivity, the value of θ_{JA} may differ for various PCBs.

The most efficient measurement solution is achieved using the package surface temperature to estimate the die temperature. This eliminates the variance associated with the θ_{JA} value.

Do not exceed the maximum junction temperature (T_J max) of 125°C. The following equation calculates the junction temperature (T_J) using the measured package surface temperature and applies only when no heat sink is used on the device under test (DUT):

$$T_J = T_S + (\Psi_{JT} \times W_{TOTAL})$$

where:
T_S is the package surface temperature (°C).
Ψ_{JT} = 0.81°C/W for the 100-ball CSP_BGA (based on 2s2p test board defined by JEDEC standards.

$$W_{TOTAL} = (PVDD \times I_{PVDD}) + (TVDD \times I_{TVDD}) - P_{UpStream} + (CVDD \times I_{CVDD}) + (AVDD \times I_{AVDD}) + (DVDD \times I_{DVDD}) + (DVDDIO \times I_{DVDDIO}) + (MVDD \times I_{MVDD})$$

where $P_{UpStream}$ is the quantity of TVDD power consumed on the upstream HDMI transmitter. $P_{UpStream}$ can be estimated to be around 110 mW for a nominal HDMI transmitter.

ESD CAUTION



ESD (electrostatic discharge) sensitive device. Charged devices and circuit boards can discharge without detection. Although this product features patented or proprietary protection circuitry, damage may occur on devices subjected to high energy ESD. Therefore, proper ESD precautions should be taken to avoid performance degradation or loss of functionality.

PIN CONFIGURATION AND FUNCTION DESCRIPTIONS

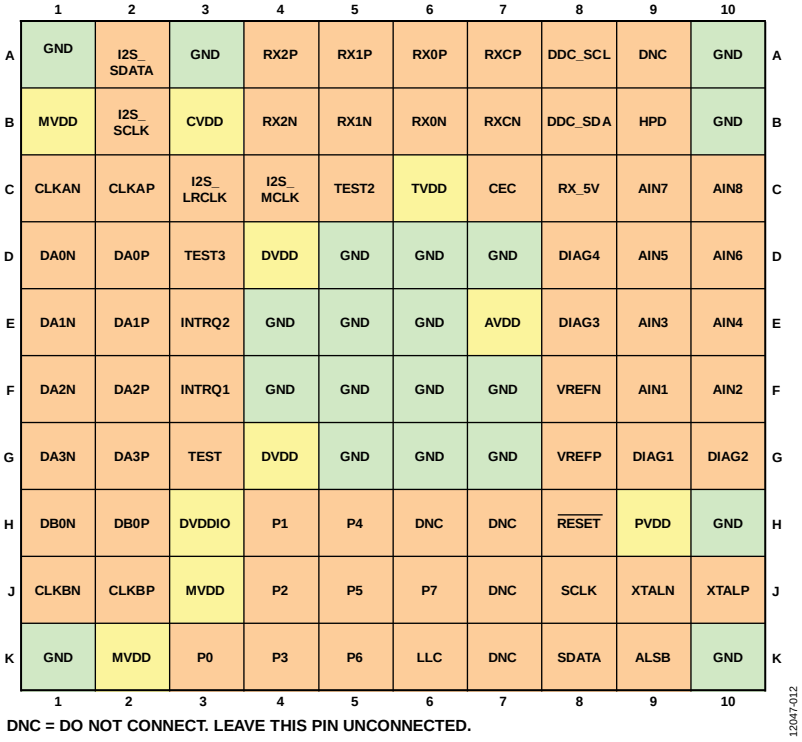

Figure 9. Pin Configuration

Table 7. Pin Function Descriptions

Pin No.	Mnemonic	Type	Description
A1	GND	Ground	Ground.
A2	I2S_SDATA	Output	I2S Audio Output.
A3	GND	Ground	Ground.
A4	RX2P	HDMI	HDMI Digital Input Channel 2.
A5	RX1P	HDMI	HDMI Digital Input Channel 1.
A6	RX0P	HDMI	HDMI Digital Input Channel 0.
A7	RXCP	HDMI	HDMI Input Clock.
A8	DDC_SCL	HDMI	HDCP Slave Serial Clock.
A9	DNC	Miscellaneous	Do Not Connect. Leave this pin unconnected.
A10	GND	Ground	Ground.
B1	MVDD	Power	MIPI Supply Voltage (1.8 V).
B2	I2S_SCLK	Output	Audio Serial Clock.
B3	CVDD	Power	HDMI Comparator Supply Voltage (1.8 V). This is the supply for the HDMI sensitive analog circuitry. Blocks on this supply include the TMDS PLL and the equalizers.
B4	RX2N	HDMI	HDMI Digital Input Channel 2 Complement.
B5	RX1N	HDMI	HDMI Digital Input Channel 1 Complement.
B6	RX0N	HDMI	HDMI Digital Input Channel 0 Complement.
B7	RXCN	HDMI	HDMI Input Clock Complement.
B8	DDC_SDA	HDMI	HDCP Slave Serial Data.
B9	HPD	HDMI	HDMI Hot Plug Assert.
B10	GND	Ground	Ground.

Pin No.	Mnemonic	Type	Description
C1	CLKAN	Output	MIPI Transmitter A Negative Output Clock.
C2	CLKAP	Output	MIPI Transmitter A Positive Output Clock.
C3	I2S_LRCLK	Output	Audio Left/Right Clock.
C4	I2S_MCLK	Output	Audio Master Clock Output.
C5	TEST2	Miscellaneous	Test Pin 2. Pull down via a large pull-down resistor to ground.
C6	TVDD	Power	HDMI Terminator Supply Voltage (3.3 V).
C7	CEC	HDMI	CEC Channel.
C8	RX_5V	HDMI	HDMI 5 V Detect. A large pull-down resistor (100 kΩ, typical) to ground must be connected to this pin.
C9	AIN7	Input	Analog Video Input Channel.
C10	AIN8	Input	Analog Video Input Channel.
D1	DA0N	Output	MIPI Transmitter A Negative Data Output.
D2	DA0P	Output	MIPI Transmitter A Positive Data Output.
D3	TEST3	Miscellaneous	Test Pin 3. Pull up to DVDDIO via a pull-up resistor (4.7 kΩ).
D4	DVDD	Power	Digital Supply Voltage (1.8 V).
D5	GND	Ground	Ground.
D6	GND	Ground	Ground.
D7	GND	Ground	Ground.
D8	DIAG4	Input	Analog Video Diagnostic Input. This input is 5 V tolerant.
D9	AIN5	Input	Analog Video Input Channel.
D10	AIN6	Input	Analog Video Input Channel.
E1	DA1N	Output	MIPI Transmitter A Negative Data Output.
E2	DA1P	Output	MIPI Transmitter A Positive Data Output.
E3	INTRQ2	Output	Interrupt Request Output.
E4	GND	Ground	Ground.
E5	GND	Ground	Ground.
E6	GND	Ground	Ground.
E7	AVDD	Power	Analog Supply Voltage (1.8 V).
E8	DIAG3	Input	Analog Video Diagnostic Input. This input is 5 V tolerant.
E9	AIN3	Input	Analog Video Input Channel.
E10	AIN4	Input	Analog Video Input Channel.
F1	DA2N	Output	MIPI Transmitter A Negative Data Output.
F2	DA2P	Output	MIPI Transmitter A Positive Data Output.
F3	INTRQ1	Output	Interrupt Request Output.
F4	GND	Ground	Ground.
F5	GND	Ground	Ground.
F6	GND	Ground	Ground.
F7	GND	Ground	Ground.
F8	VREFN	Output	Internal Voltage Reference Output.
F9	AIN1	Input	Analog Video Input Channel.
F10	AIN2	Input	Analog Video Input Channel.
G1	DA3N	Output	MIPI Transmitter A Negative Data Output.
G2	DA3P	Output	MIPI Transmitter A Positive Data Output.
G3	TEST	Miscellaneous	Do Not Connect. Leave this pin unconnected.
G4	DVDD	Power	Digital Supply Voltage (1.8 V).
G5	GND	Ground	Ground.
G6	GND	Ground	Ground.
G7	GND	Ground	Ground.
G8	VREFP	Output	Internal Voltage Reference Output.
G9	DIAG1	Input	Analog Video Diagnostic Input. This input is 5 V tolerant.
G10	DIAG2	Input	Analog Video Diagnostic Input. This input is 5 V tolerant.

Pin No.	Mnemonic	Type	Description
H1	DB0N	Output	MIPI Transmitter B Negative Data Output.
H2	DB0P	Output	MIPI Transmitter B Positive Data Output.
H3	DVDDIO	Power	Digital Input/Output Supply Voltage (3.3 V).
H4	P1	Input/Output	Video Pixel Input/Output Port.
H5	P4	Input/Output	Video Pixel Input/Output Port.
H6	DNC	Miscellaneous	Do Not Connect. Leave this pin unconnected.
H7	DNC	Miscellaneous	Do Not Connect. Leave this pin unconnected.
H8	$\overline{\text{RESET}}$	Input	System Reset Input, Active Low. A minimum low reset pulse of 5 ms is required to reset the chip.
H9	PVDD	Power	PLL Supply Voltage (1.8 V).
H10	GND	Ground	Ground.
J1	CLKBN	Output	MIPI Transmitter B Negative Output Clock.
J2	CLKBP	Output	MIPI Transmitter B Positive Output Clock.
J3	MVDD	Power	MIPI Supply Voltage (1.8 V).
J4	P2	Input/Output	Video Pixel Input/Output Port.
J5	P5	Input/Output	Video Pixel Input/Output Port.
J6	P7	Input/Output	Video Pixel Input/Output Port.
J7	DNC	Miscellaneous	Do Not Connect. Leave this pin unconnected.
J8	SCLK	Input	I^2C Port Serial Clock Input.
J9	XTALN	Output	Crystal Output. This pin must be connected to the 28.63636 MHz crystal or not connected if an external 1.8 V, 28.63636 MHz clock oscillator is used. In crystal mode, the crystal must be a fundamental crystal.
J10	XTALP	Input	Crystal Input or External Clock Input. This pin must be connected to the 28.63636 MHz crystal or connected to an external 1.8 V, 28.63636 MHz clock oscillator if a clock oscillator is used. In crystal mode, the crystal must be a fundamental crystal.
K1	GND	Ground	Ground.
K2	MVDD	Power	MIPI Supply Voltage (1.8 V).
K3	P0	Input/Output	Video Pixel Input/Output Port.
K4	P3	Input/Output	Video Pixel Input/Output Port.
K5	P6	Input/Output	Video Pixel Input/Output Port.
K6	LLC	Input/Output	Line Locked Clock. Input/output clock for the pixel data.
K7	DNC	Miscellaneous	Do Not Connect. Leave this pin unconnected.
K8	SDATA	Input/Output	I^2C Port Serial Data Input/Output.
K9	ALSB	Input	Main I^2C Address Selection Pin. This pin selects the main I^2C address (IO Map I^2C address) for the part. When ALSB is set to Logic 0, the IO Map I^2C write address is 0xE0; when ALSB is set to Logic 1, the IO Map I^2C write address is 0xE2.
K10	GND	Ground	Ground.

POWER SUPPLY RECOMMENDATION

POWER-UP SEQUENCE

Adhere to the absolute maximum ratings at all times during power-up (see Table 6). The power-up sequence for the ADV7482 is as follows:

1. Assert $\overline{\text{RESET}}$ (pull the pin low).
2. Power up the 3.3 V supplies (D_{VDDIO} and T_{VDD}). These supplies must be powered up simultaneously.
3. Power up the 1.8 V supplies (D_{VDD}, C_{VDD}, P_{VDD}, M_{VDD}, and A_{VDD}). These supplies must be powered up simultaneously.
4. $\overline{\text{RESET}}$ can be deasserted (pulled high) 5 ms after all supplies are fully powered up.
5. After all power supplies and the $\overline{\text{RESET}}$ pin are powered up and stable, wait an additional 5 ms before initiating I^2C communication with the ADV7482.

POWER-DOWN SEQUENCE

The ADV7482 power supplies can be deasserted simultaneously as long as a higher rated supply (for example, D_{VDDIO}) does not fall to a voltage level less than a lower rated supply (for example, D_{VDD}), and the absolute maximum ratings specifications are followed.

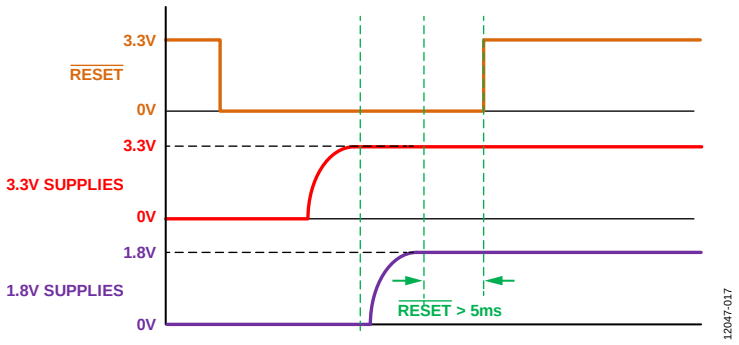

Figure 10. Supply Power-Up Sequence

THOERY OF OPERATION

HDMI RECEIVER

The HDMI receiver supports video formats ranging from 480i to 1080p, and display resolutions from VGA (640 × 480 at 60 Hz) to UXGA (1600 × 1200 at 60 Hz).

The HDMI receiver allows programmable equalization of the HDMI data signals. This equalization compensates for the high frequency losses inherent in HDMI and DVI cabling, especially at longer lengths and higher frequencies. The receiver is capable of equalizing for cable lengths up to 30 meters to achieve robust receiver performance.

The HDMI interface of the ADV7482 allows for authentication of a video receiver, decryption of encoded data at the receiver, and renewability of that authentication during transmission, as specified by the HDCP 1.4 protocol.

Dual extended display identification data (EDID) support is provided via an on-chip 512-byte EDID RAM. The EDID RAM must be programmed at power-up. It can be configured as two 256-byte EDIDs, or as a single 512-byte EDID.

The ADV7482 has a synchronization regeneration block used to regenerate the data enable (DE) signal based on the measurement of the video format being displayed and to filter the horizontal and vertical synchronization signals to prevent glitches.

The HDMI receiver also supports TMDS error reduction coding, 4-bit (TERC4) error detection, used for the detection of corrupted HDMI packets.

The main HDMI receiver features include

- 162.0 MHz (UXGA at 24 BPP) maximum TMDS clock frequency.
- Integrated fully adaptive equalizer for cable lengths up to 30 meters.
- HDCP 1.4 support.
- Internal HDCP keys.
- HDCP repeater support, up to 25 key selection vectors (KSVs) supported.
- PCM audio packet support.
- Support for 8-channel TDM output data up to 48 kHz.
- Repeater support.
- Internal EDID RAM (512-byte for single mode, and 256-byte for dual mode operation).
- Hot Plug assert output pin (HPD).
- CEC controller.

COMPONENT PROCESSOR

The ADV7482 has one any-to-any 3 × 3 CSC matrix. The CSC block is located in the processing path before the CP section. CSC enables YCbCr-to-RGB and RGB-to-YCbCr conversions. Many other standards of color space can be implemented using the color space converter.

CP features include

- Support for all video modes supported by the HDMI receiver. These include 525i, 625i, 525p, 625p, 1080i, 1080p, and display resolutions from VGA (640 × 480 at 60 Hz) to UXGA (1600 × 1200 at 60 Hz).
- Manual adjustments including gain (contrast), offset (brightness), hue, and saturation.
- Free run output mode that provides stable timing when no video input is present.
- Timing adjustments controls for HS/VS/DE timing.

ANALOG FRONT END

The ADV7482 AFE comprises a single high speed, 10-bit ADC that digitizes the analog video signal before applying it to the SDP. The AFE uses differential channels to the ADC to ensure high performance in mixed-signal applications and to enable differential CVBS to be connected directly to the ADV7482.

Up to eight analog inputs can be connected to the AFE. The front end also includes an 8-channel input mux that enables different configurations of single-ended CVBS (up to eight), pseudo differential or fully differential CVBS (up to four), Y/C (up to four), and YPbPr (up to two) analog inputs.

Current clamps are positioned in front of the ADC to ensure that the video signal remains within the range of the converter. A resistor divider network is required before each analog input channel to ensure that the input signal is within the range of the ADC. Figure 11 shows a typical voltage divider network for single-ended inputs, Figure 12 shows a typical voltage divider network for pseudo differential inputs, and Figure 13 shows a typical voltage divider network for fully differential inputs. The choice of the resistor divider shown in Figure 13 provides a common-mode range of up to 4 V in fully differential CVBS input mode. Fine clamping of the video signal is performed downstream by digital fine clamping within the ADV7482.

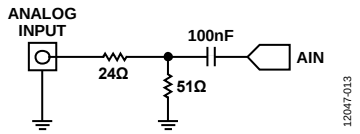

Figure 11. Typical Single-Ended Input Voltage Divider Network

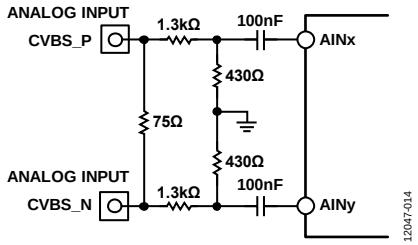

Figure 12. Typical Pseudo Differential Input Resistor Divider Network

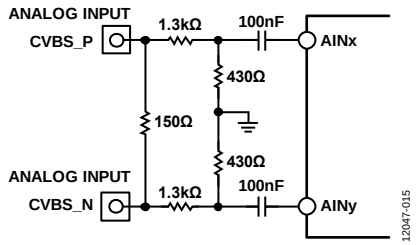

Figure 13. Typical Fully Differential Input Resistor Divider Network

The ADC features three clocking rates that allow 4× oversampling per channel for CVBS mode, Y/C mode, and YPbPr mode.

The fully differential AFE of the ADV7482 provides inherent small and large signal noise rejection, improved electromagnetic interference (EMI) protection, and the ability to absorb ground bounce. Support is provided for both true differential and pseudo differential signals.

The main AFE features include

- A single 172 MHz, 10-bit ADC that enables true 8-bit video decoding.
- 8-channel analog input mux that enables multiple source connections without the requirement of an external mux.
- A current clamp control loop that ensures that any dc offsets are removed from the video signal entering the SDP.
- Diagnostic capability on all differential inputs.
- Support for 4 V common-mode input range.
- Support for analog input signals up to 1 V p-p.
- Support for single-ended, pseudo differential, and fully differential inputs.

SHORT TO BATTERY DIAGNOSTICS

In differential mode, the ADV7482 is protected against STB events by ac coupling capacitors (see Figure 12 and Figure 13). The input network resistors are sized to reduce the current flow during an STB event, thus preventing damage to the resistors. Note that the input network resistors and the ac coupling capacitors must be chosen with ratings guaranteeing they are able to withstand the high voltage of STB events.

The four diagnostic inputs of the ADV7482 provide diagnostic capability for all differential inputs. The ADV7482 can detect an STB event on either the positive or the negative composite input and trigger an interrupt. The 75 Ω (pseudo differential) or 150 Ω (fully differential) parallel termination resistor enables one DIAGx pin to sense an STB event on either input, because there is a minimal voltage drop across the resistor.

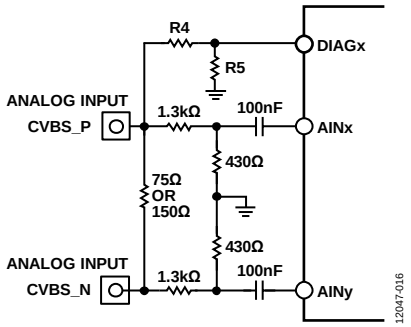

Figure 14. Diagnostic Connection for Differential Inputs

Resistors R4 and R5 divide down the voltage at the input connector to protect the DIAGx pin from an STB event. The DIAGx pin circuitry compares this voltage to a programmable reference voltage, known as the diagnostic slice level. When the diagnostic slice level is exceeded, an STB event has occurred.

R4 and R5 are sized to allow the use of low cost, small footprint resistors that are tolerant of STB events.

Use the following equation to find the STB voltage for a selected diagnostic slice level.

$$V_{STB_TRIGGER} = \frac{R5 + R4}{R5} \times DIAGNOSTIC_SLICE_LEVEL$$

where:
$V_{STB_TRIGGER}$ is the minimum voltage required at the input connector to trigger the STB interrupt on the ADV7482.
DIAGNOSTIC_SLICE_LEVEL is the programmable reference voltage.

For example, with a diagnostic slice level programmed to 1.125 V, an R4 value of 9.1 kΩ, and an R5 value of 1 kΩ, the minimum voltage required at the input connector to trigger the STB interrupt is approximately 11.4 V.

When the DIAGx pin voltage exceeds the diagnostic slice level voltage, a hardware interrupt is triggered and indicated by one of the interrupt pins. A readback register specifies the input on which the STB event occurred.

STANDARD DEFINITION PROCESSOR

The ADV7482 is capable of decoding a large selection of baseband video signals in composite (both single-ended and differential), S-Video, and component formats. The video standards supported by the video processor include

- PAL B, PAL D, PAL G, PAL H, PAL I, PAL M, PAL N, PAL Nc, and PAL 60
- NTSC J, NTSC M, and NTSC 4.43
- SECAM B, SECAM D, SECAM G, SECAM K, and SECAM L

The ADV7482 can automatically detect the video standard and process it accordingly.

The ADV7482 has a five-line adaptive 2D comb filter that provides superior chrominance and luminance separation when decoding a composite video signal. This highly adaptive filter automatically adjusts its processing mode according to the

video standard and signal quality without requiring user intervention. Video user controls such as brightness, contrast, saturation, and hue are also available with the ADV7482.

The ADV7482 implements the patented Adaptive Digital Line Length Tracking (ADLLT™) algorithm to track varying video line lengths from sources such as a VCR. ADLLT enables the ADV7482 to track and decode poor quality video sources such as VCRs and noisy sources from tuner outputs, VCD players, and camcorders. The ADV7482 contains a chroma transient improvement (CTI) processor that sharpens the edge rate of chroma transitions, resulting in sharper vertical transitions.

The ACE of the ADV7482 offers improved visual detail using an algorithm that automatically varies contrast levels to enhance picture detail. ACE allows the contrast of an image to increase depending on the content of the picture. Typically, this allows bright areas to be made brighter and dark areas to be made darker. However, the ADV7482 ACE feature also allows the contrast within dark areas to increase without significantly affecting the bright areas of the picture. This feature is particularly useful in automotive applications, where it is important to discern objects in shaded areas.

Down dithering converts the output of the ADV7482 from an 8-bit to a 6-bit output, enabling ease of design for standard LCD panels.

The SDP can process a variety of VBI data services, such as closed captioning (CCAP), wide screen signaling (WSS), and copy generation management system (CGMS).

The ADV7482 is fully Rovi®(Macrovision®) compliant; detection circuitry enables Type I, Type II, and Type III protection levels to be identified and reported to the user. The decoder is also fully robust to all Macrovision signal inputs.

8-BIT DIGITAL INPUT/OUTPUT PORT

The ADV7482 features an 8-bit digital bidirectional port. The following formats are supported both as input and output ports:

- 8-bit interleaved 4:2:2 SDR input/output with embedded timing codes
- 8-bit interleaved 4:2:2 DDR input/output with embedded timing codes

The maximum input and output video resolution supported is 720p/1080i in both SDR and DDR modes.

Video received on the 8-bit digital input port can be routed to the four-lane MIPI CSI-2 transmitter. Video sent on the 8-bit digital output port can be routed from either the SD core or the CP core.

AUDIO PROCESSING

The ADV7482 features an audio processor that handles the audio extracted from the HDMI stream by the HDMI receiver. It contains an audio mute controller that can detect a variety of conditions that may result in audible extraneous noise in the audio output. On detection of these conditions, a 2-channel linear PCM audio signal can be ramped down to a mute state to prevent audio clicks or pops.

The audio is output on a single flexible serial digital audio output port supporting I^2S-compatible, left justified, and right justified audio output modes in master mode only. TDM is also supported, allowing up to eight audio channels with a sample rate up to 48 kHz to be transmitted over the single serial digital audio interface.

MIPI CSI-2 TRANSMITTERS

The ADV7482 features two MIPI CSI-2 transmitters: a four-lane transmitter (Transmitter A) and a single lane transmitter (Transmitter B).

The four-lane transmitter consists of four differential data lanes (DA0N, DA0P, DA1N, DA1P, DA2N, DA2P, DA3N and DA3P), and a differential clock lane (CLKAN and CLKAP). It supports four data lanes, two data lanes, and one data lane muxing options, and can be used to transmit video received on either the HDMI receiver (processed through the CP), the 8-bit digital input port, or the AFE (processed through the SDP).

The main features of the four-lane MIPI transmitter (Transmitter A) include

- Support for 8-bit and 10-bit YCbCr 4:2:2 video modes.
- Support for 24-bit RGB 4:4:4 (RGB888), 18-bit RGB 4:4:4 (RGB666), and 16-bit RGB 4:4:4 (RGB565) video modes.
- Support for video formats ranging from 480i to 1080p, and display resolutions from VGA to UXGA (certain restrictions apply to the muxing option, video mode, and video format that can be selected).
- Data lanes and clock lane remapping to ease PCB layout.

The single lane transmitter consists of a single differential data lane (DB0N and DB0P) and a differential clock lane (CLKBN and CLKBP). It transmits video received on the AFE (processed through the SDP).

The main features of the single lane MIPI transmitter (Transmitter B) include

- Support for 8-bit YCbCr 4:2:2 video mode.
- Support for 480i and 576i video formats.

INTERRUPTS

The ADV7482 features two interrupt request pins. INTRQ1 and INTRQ2 can be programmed to trigger interrupts based on various selectable events related to the HDMI receiver (video and audio related), the SDP, and the CP.

OUTLINE DIMENSIONS

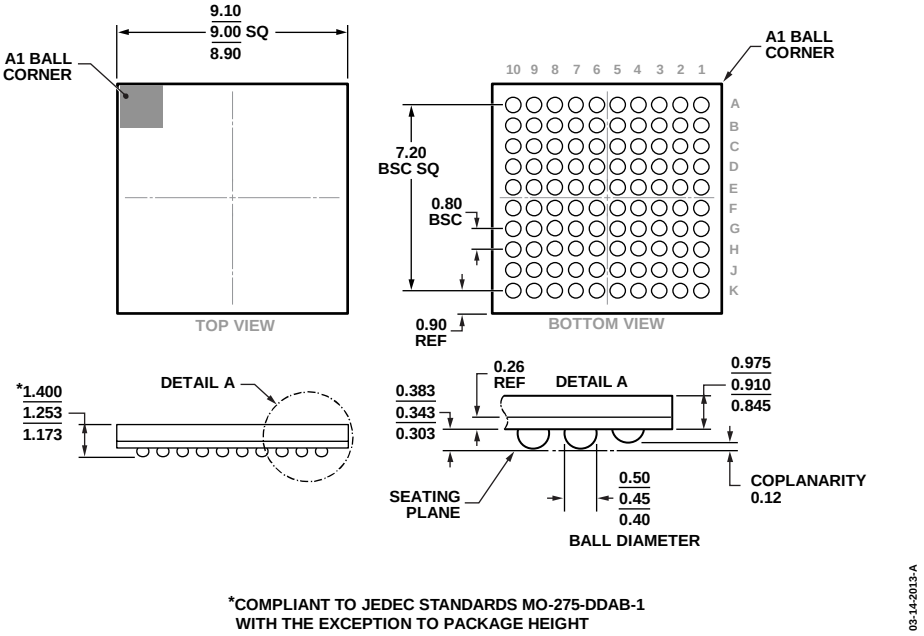

Figure 15. 100-Ball Chip Scale Package Ball Grid Array [CSP_BGA]
(BC-100-4)
Dimensions shown in millimeters

ORDERING GUIDE

Model[1, 2, 3]	Temperature Range	Package Description	Package Option
ADV7482WBBCZ	−40°C to +85°C	100-Ball Chip Scale Package Ball Grid Array [CSP_BGA]	BC-100-4
ADV7482WBBCZ-RL	−40°C to +85°C	100-Ball Chip Scale Package Ball Grid Array [CSP_BGA]	BC-100-4

[1] Z = RoHS Compliant Part.
[2] W = Qualified for Automotive Applications.
[3] This device is programmed with internal HDCP keys. Customer must have HDCP adopter status (consult Digital Protection, LLC, for licensing requirements) to purchase any components with internal HDCP keys

AUTOMOTIVE PRODUCTS

The ADV7482W models are available with controlled manufacturing to support the quality and reliability requirements of automotive applications. Note that these automotive models may have specifications that differ from the commercial models; therefore, designers should review the Specifications section of this data sheet carefully. Only the automotive grade products shown are available for use in automotive applications. Contact your local Analog Devices account representative for specific product ordering information and to obtain the specific Automotive Reliability reports for these models.

I²C refers to a communications protocol originally developed by Philips Semiconductors (now NXP Semiconductors).

©2014 Analog Devices, Inc. All rights reserved. Trademarks and registered trademarks are the property of their respective owners.
D12047-0-6/14(0)