165 MHz, High Performance HDMI Transmitter

Data Sheet

ADV7511W

FEATURES

General
- Incorporates HDMI v.1.4a features
  - 3D video support
  - Extended colorimetry
- 165 MHz supports all video formats up to 1080p and UXGA
- Supports gamut metadata packet transmission
- Integrated CEC buffer/controller
- Compatible with DVI v.1.0 and HDCP v.1.3
- Video/audio inputs accept logic levels from 1.8 V to 3.3 V

Digital video
- 3D video ready
- Programmable 2-way color space converter
- Supports RGB, YCbCr, and DDR
- Supports ITU656-based embedded syncs
- Automatic input video format timing detection (CEA-861-E)

Digital audio
- Supports standard SPDIF for stereo LPCM or compressed audio up to 192 kHz
- High bit-rate audio (HBR)
- 8-channel uncompressed LPCM I²S audio up to 192 kHz

Special features for easy system design
- On-chip MPU with I²C master to perform HDCP operations and EDID reading operations
- 5 V tolerant I²C and HPD I/Os, no extra device needed
- No audio master clock needed for supporting SPDIF and I²S
- On-chip MPU reports HDMI events through interrupts and registers
- Qualified for automotive applications

APPLICATIONS

Automotive infotainment
- Gaming consoles
- PCs
- DVD players and recorders
- Digital set-top boxes
- A/V receivers

FUNCTIONAL BLOCK DIAGRAM

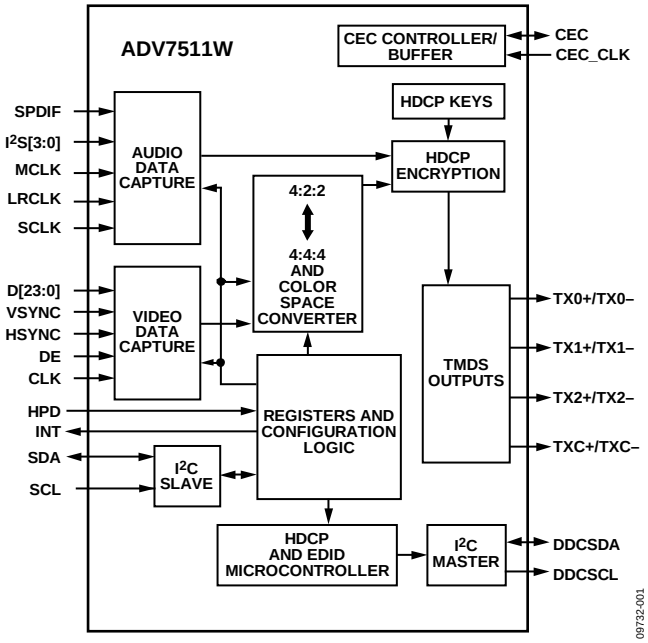

Figure 1.

GENERAL DESCRIPTION

The ADV7511W is a 165 MHz High-Definition Multimedia Interface (HDMI®) transmitter, which is ideal for automotive entertainment products including DVD players/recorders, digital set-top boxes, A/V receivers, gaming consoles, and PCs.

The digital video interface contains an HDMI v.1.4a/DVI v.1.0-compatible transmitter and supports all HDTV formats. The ADV7511W supports HDMI v1.4a-specific features (3D video and extended colorimetry) in addition to x.v.Color™, high bit rate audio, and programmable AVI InfoFrames. Internal HDCP keys allow the secure transmission of protected content as specified by the HDCP v.1.3 protocol.

The ADV7511W supports both SPDIF and 8-channel I²S audio. Its high fidelity 8-channel I²S can transmit either stereo or 7.1 surround audio up to 768 kHz. The SPDIF can carry compressed audio including Dolby® Digital, DTS®, and THX®. Fabricated in an advanced CMOS process, the ADV7511W is provided in a 64-lead LQFP surface-mount plastic package with exposed paddle and is specified over the −40°C to +105°C temperature range.

Rev. A
Information furnished by Analog Devices is believed to be accurate and reliable. However, no responsibility is assumed by Analog Devices for its use, nor for any infringements of patents or other rights of third parties that may result from its use. Specifications subject to change without notice. No license is granted by implication or otherwise under any patent or patent rights of Analog Devices. Trademarks and registered trademarks are the property of their respective owners.

One Technology Way, P.O. Box 9106, Norwood, MA 02062-9106, U.S.A.
Tel: 781.329.4700 www.analog.com
Fax: 781.461.3113 ©2011-2012 Analog Devices, Inc. All rights reserved.

TABLE OF CONTENTS

Features 1
Applications 1
Functional Block Diagram 1
General Description 1
Revision History 2
Specifications 3
Electrical Specifications 3
Absolute Maximum Ratings 5
Explanation of Test Levels 5
ESD Caution 5
Pin Configuration and Function Descriptions 6
Applications Information 8
Design Resources 8
Outline Dimensions 9
Ordering Guide 9
Automotive Products 9

REVISION HISTORY

6/12—Rev. 0 to Rev. A

Changes to I^2C Lines Parameter, Table 1 3

5/11—Revision 0: Initial Version

SPECIFICATIONS

ELECTRICAL SPECIFICATIONS

Table 1.

Parameter	Test Conditions/ Comments	Temp	Test Level[1]	Min	Typ	Max	Unit
DIGITAL INPUTS							
Data Inputs—Video and Audio, CEC_CLK							
Input Voltage, High (V_{IH})		Full	VI	1.35		3.5	V
Input Voltage, Low (V_{IL})		Full	VI	−0.3		+0.7	V
Input Capacitance		25°C	VIII		1.0	1.5	pF
DDC I^2C Lines (DDCSDA, DDCSCL)							
Input Voltage, High (V_{IH})		Full	VI	1.4		5.5	V
Input Voltage, Low (V_{IL})		Full	VI	−0.3		+0.7	V
I^2C Lines (SDA, SCL)							
Input Voltage, High (V_{IH})		Full	?	1.4		5.5	V
Input Voltage, Low (V_{IL})		Full	?	−0.3		+0.7	V
CEC							
Input Voltage, High (V_{IH})		Full	VI	2.0		5.5	V
Input Voltage, Low (V_{IL})		Full	VI	−0.3		+0.8	V
Output Voltage, High (V_{OH})		Full	VI	2.5		3.63	V
Output Voltage, Low (V_{OL})		Full	VI	−0.3		+0.6	V
HPD							
Input Voltage, High (V_{IH})		Full	VI	1.3		5.5	V
Input Voltage, Low (V_{IL})		Full	VI	−0.3		+0.8	V
THERMAL CHARACTERISTICS							
Thermal Resistance							
θ_{JC} Junction-to-Case		Full	V		20		°C/W
θ_{JA} Junction-to-Ambient		Full	V		43		°C/W
Ambient Temperature		Full	V	−40	+25	+105	°C
DC SPECIFICATIONS							
Input Leakage Current (I_{IL})		25°C	VI	−1		+1	µA
POWER SUPPLY							
1.8 V Supply Voltage (DVDD, AVDD, PVDD, BGVDD)		Full	IV	1.71	1.8	1.90	V
3.3 V Supply Voltage (DVDD_3V)		Full		3.15	3.3	3.45	V
Power-Down Current		25°C				100	µA
Transmitter Total Power (1.8 V Power = 200 mW and 3.3 V Power = 1 mW)	1080 p, 24 bit, typical random pattern	Full	VI		201		mW
AC SPECIFICATIONS							
TMDS Output Clock Frequency		25°C	IV	20		165	MHz
TMDS Output Clock Duty Cycle		25°C	IV	48		52	%
Input Video Clock Frequency		Full				165	MHz
Input Video Data Setup Time (t_{VSU})[2]		Full	IV	1.8			ns
Input Video Data Hold Time (t_{VHLD})[2]		Full	IV	1.3			ns
TMDS Differential Swing		25°C	VII	900	1100	1200	mV
Differential Output Timing							
Low-to-High Transition Time		25°C	VII	75	95		ps
High-to-Low Transition Time		25°C	VII	75	95		ps
VSYNC and HSYNC Delay							
From DE Falling Edge		25°C	IV		1		UI[3]
To DE Rising Edge		25°C	IV		1		UI[3]

Parameter	Test Conditions/ Comments	Temp	Test Level[1]	Min	Typ	Max	Unit
AUDIO AC TIMING							
SCLK Duty Cycle							
When N/2 Is an Even Number		Full	IV	40	50	60	%
When N/2 Is an Odd Number		Full	IV	49	50	51	%
I^2S[3:0], SPDIF Setup Time (t_{ASU})		Full	IV	2			ns
I^2S[3:0], SPDIF Hold Time (t_{AHLD})		Full	IV	2			ns
LRCLK Setup Time (t_{ASU})		Full	IV	2			ns
LRCLK Hold Time (t_{AHLD})		Full	IV	2			ns
CEC							
CEC_CLK Frequency		Full	VIII	3	12[4]	100	MHz
CEC_CLK Accuracy		Full	VIII	−2		+2	%
I^2C INTERFACE							
SCL Clock Frequency		Full				400	kHz
SDA Setup Time (t_{DSU})		Full		100			ns
SDA Hold Time (t_{DHO})		Full		100			ns
Setup for Start (t_{STASU})		Full		0.6			µs
Hold Time for Start (t_{STAH})		Full		0.6			µs
Setup for Stop (t_{STOSU})		Full		0.6			µs

[1] See the Explanation of Test Levels section.
[2] This is measured at 0.9 V. The relationship between clock and data is programmable in 400 ps steps.
[3] UI is the unit interval.
[4] 12 MHz crystal oscillator for default register settings.

ABSOLUTE MAXIMUM RATINGS

Table 2.

Parameter	Rating
Digital Inputs (SDA, SCL, DDCSDA, DDCSCL, HPD, PD, CEC)	−0.3 V to +5.5 V
Audio/Video Digital Inputs (MCLK, SPDIF, I2S[3:0], SCLK, HSYNC, DE, VSYNC, CEC_CLK)	−0.3 V to +3.63 V
Digital Output Current	20 mA
Operating Temperature Range	−40°C to +105°C
Storage Temperature Range	−65°C to +150°C
Maximum Junction Temperature	150°C
Maximum Case Temperature	150°C

Stresses above those listed under Absolute Maximum Ratings may cause permanent damage to the device. This is a stress rating only; functional operation of the device at these or any other conditions above those indicated in the operational section of this specification is not implied. Exposure to absolute maximum rating conditions for extended periods may affect device reliability.

EXPLANATION OF TEST LEVELS

I. 100% production tested.

II. 100% production tested at 25°C and sample tested at specified temperatures.

III. Sample tested only.

IV. Parameter is guaranteed by design and characterization testing.

V. Parameter is a typical value only.

VI. 100% production tested at 25°C; guaranteed by design and characterization testing.

VII. Limits defined by HDMI specification; guaranteed by design and characterization testing.

VIII. Parameter is guaranteed by design.

ESD CAUTION



ESD (electrostatic discharge) sensitive device. Charged devices and circuit boards can discharge without detection. Although this product features patented or proprietary protection circuitry, damage may occur on devices subjected to high energy ESD. Therefore, proper ESD precautions should be taken to avoid performance degradation or loss of functionality.

PIN CONFIGURATION AND FUNCTION DESCRIPTIONS

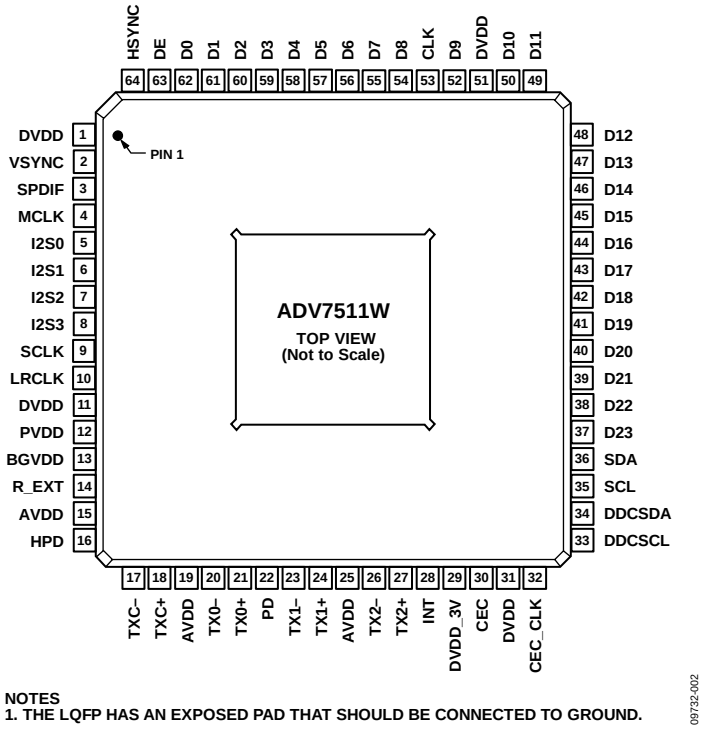

NOTES
1. THE LQFP HAS AN EXPOSED PAD THAT SHOULD BE CONNECTED TO GROUND.

Figure 2. Pin Configuration

Table 3. Pin Function Descriptions

Pin No.	Mnemonic	Type	Description
1, 11, 31, 51	DVDD	Power	1.8 V Power Supply. These pins should be filtered and as quiet as possible.
2	VSYNC	Input	Vertical Sync Input.
3	SPDIF	Input	SPDIF (Sony/Philips Digital Interface) Audio Input.
4	MCLK	Input	Audio Reference Clock Input.
5	I2S0	Input	I²S Channel 0 Audio Data Input.
6	I2S1	Input	I²S Channel 1 Audio Data Input.
7	I2S2	Input	I²S Channel 2 Audio Data Input.
8	I2S3	Input	I²S Channel 3 Audio Data Input.
9	SCLK	Input	I²S Audio Clock Input.
10	LRCLK	Input	Left/Right Channel Signal Input.
12	PVDD	Power	1.8 V PLL Power Supply.
13	BGVDD	Power	Band Gap Power Supply.
14	R_EXT	Input	This pin sets the internal reference currents.
15, 19, 25	AVDD	Power	1.8 V Power Supply for TMDS Outputs.
16	HPD	Input	Hot Plug™ Detect Signal Input.
17, 18	TXC−, TXC+	Differential output	Differential TMDS Clock Output.
20, 21	TX0−, TX0+	Differential output	Differential TMDS Output Channel 0.
22	PD	Input	Power-Down Control and I²C Address Selection.
23, 24	TX1−, TX1+	Differential output	Differential TMDS Output Channel 1.
26, 27	TX2−, TX2+	Differential output	Differential TMDS Output Channel 2.
28	INT	Output	Interrupt Signal Output.
29	DVDD_3V	Power	3.3 V Power Supply.

Pin No.	Mnemonic	Type	Description
30	CEC	Input/output	CEC Data Signal.
32	CEC_CLK	Input	CEC clock is an oscillator from 3 MHz to 100 MHz.
33	DDCSCL	Control	Serial Port Data Clock to Sink.
34	DDCSDA	Control	Serial Port Data I/O to Sink.
35	SCL	Control	Serial Port Data Clock Input.
36	SDA	Control	Serial Port Data I/O.
37 to 50, 52, 54 to 62	D[23:0]	Input	Video Data Input
53	CLK	Input	Video Input Clock.
63	DE	Input	Data Enable Signal Input for Digital Video.
64	HSYNC	Input	Horizontal Sync Input.
	EPAD	Power	The LQFP has an exposed pad that should be connected to ground.

APPLICATIONS INFORMATION

DESIGN RESOURCES

Evaluation kits, reference design schematics, hardware and software guides, and other support documentation are available from Analog Devices, Inc., Engineer Zone.

Other references include the following:

- *EIA/CEA-861D*, a technical specifications document, describes audio and video InfoFrames, as well as the E-EDID structure for HDMI. It is available from the Consumer Electronics Association (CEA).
- *High-Definition Multimedia Interface Specification Version 1.4a*, a defining document for HDMI v.1.4a, and the *High-Definition Multimedia Interface Compliance Test Specification Version 1.4a* are available from HDMI Licensing, LLC.
- *High-Bandwidth Digital Content Protection System Revision 1.3*, the defining technical specifications document for the HDCP v.1.3, is available from Digital Content Protection, LLC.

OUTLINE DIMENSIONS

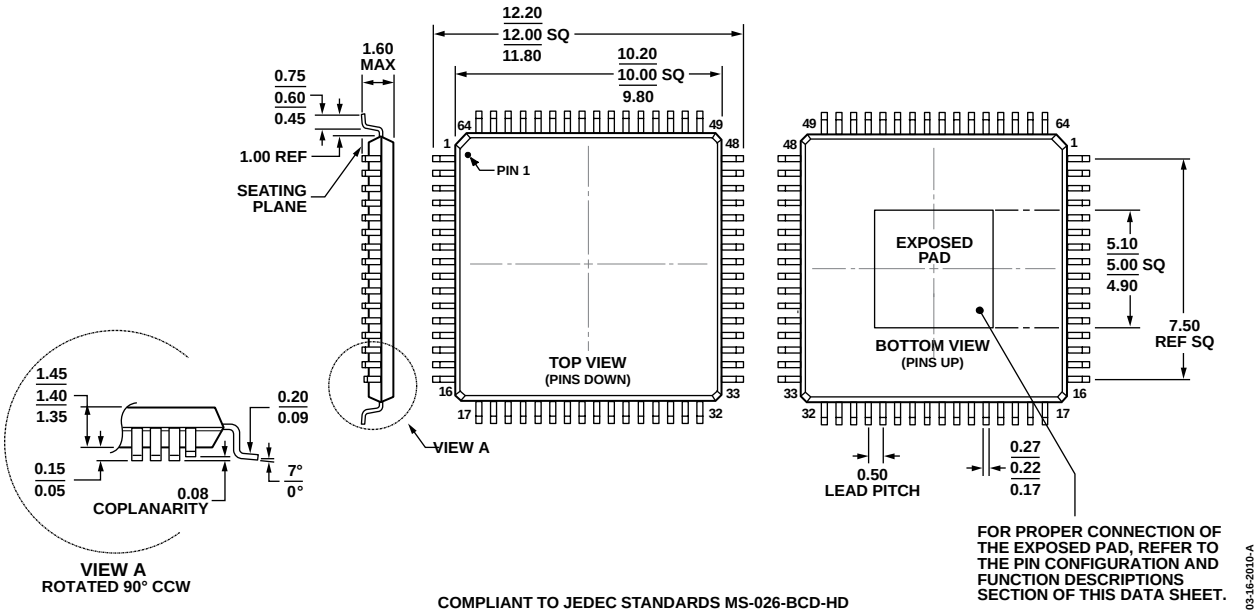

Figure 3. 64-Lead Low Profile Quad Flat Package [LQFP_EP]
(SW-64-2)
Dimensions shown in millimeters

ORDERING GUIDE

Model[1, 2]	Temperature Range	Package Description	Package Option
ADV7511WBSWZ	−40°C to +105°C	64-Lead Low Profile Quad Flat Package with Exposed Pad [LQFP_EP]	SW-64-2
ADV7511WBSWZ-RL	−40°C to +105°C	64-Lead Low Profile Quad Flat Package with Exposed Pad [LQFP_EP], Tape and Reel	SW-64-2
EVAL-ADV7511W-AKZ		Evaluation Kit	

[1] Z = RoHS Compliant Part.
[2] W = Qualified for Automotive Applications.

AUTOMOTIVE PRODUCTS

The ADV7511W models are available with controlled manufacturing to support the quality and reliability requirements of automotive applications. Note that these automotive models may have specifications that differ from the commercial models; therefore, designers should review the Specifications section of this data sheet carefully. Only the automotive grade products shown are available for use in automotive applications. Contact your local Analog Devices account representative for specific product ordering information and to obtain the specific Automotive Reliability reports for these models.

NOTES

NOTES

NOTES

I²C refers to a communications protocol originally developed by Philips Semiconductors (now NXP Semiconductors).

HDMI, the HDMI Logo, and High-Definition Multimedia Interface are trademarks or registered trademarks of HDMI Licensing LLC in the United States and other countries.

©2011-2012 Analog Devices, Inc. All rights reserved. Trademarks and registered trademarks are the property of their respective owners.
D09732-0-6/12(A)