HMC270AMS8GE

v03.0818

GAAS MMIC SPDT SWITCH NON-REFLECTIVE, DC -8 GHz

Typical Applications

The HMC270AMS8GE is ideal for DC - 8.0 GHz applications:

- CATV
- MMDS & WirelessLAN
- Wireless Local Loop

Features

Broadband Performance: DC - 8 GHz

Very High Isolation: 45 dB @ 6 GHz

Non-Reflective Design

Low Cost MSOP-8 Package: 14.8 mm^2

Functional Diagram

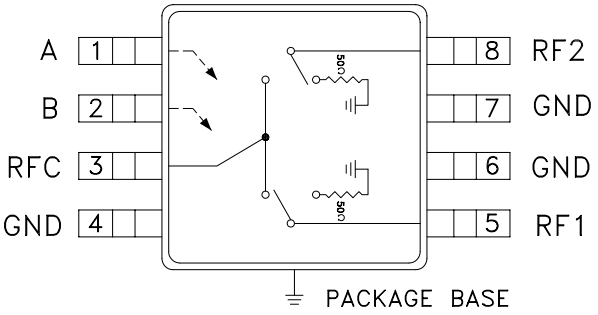

General Description

The HMC270AMS8GE are broad-band non-reflective GaAs SPDT switches in 8 lead MSOP grounded base surface mount plastic packages. Covering DC to 8 GHz, the switch offers excellent isolation from 70 to 35 dB. The negative control voltage of -5 volts allows operation down to DC. If positive control is required along with high isolation, see the DC to 3.5 GHz HMC284AMS8GE non-reflective SPDT.

Electrical Specifications, T_A = +25° C, With 0/-5V Control, 50 Ohm system

Parameter	Frequency	Min.	Typ.	Max.	Units
Insertion Loss	DC - 2.0 GHz DC - 6.0 GHz DC - 8.0 GHz		0.8 1.0 2.4	1.2 1.7 2.8	dB dB dB
Isolation	DC - 2.0 GHz DC - 4.0 GHz DC - 6.0 GHz DC - 8.0 GHz	43 42 37 28	53 52 45 33		dB dB dB dB
Return Loss "On State"	DC - 2.0 GHz DC - 6.0 GHz DC - 8.0 GHz	11 9 7	14 12 10		dB dB dB
Return Loss RF1, RF2 "Off State"	DC - 2.0 GHz DC - 6.0 GHz DC - 8.0 GHz	15 13 10	20 18 15		dB dB dB
Input Power for 1 dB Compression	0.5 - 8.0 GHz	24	28		dBm
Input third Order Intercept (Two-Tone Input Power = +10 dBm Each Tone)	0.5 - 8.0 GHz	37	42		dBm
Switching Characteristics tRISE, tFALL (10/90% RF) tON, tOFF (50% CTL to 10/90% RF)	DC - 8.0 GHz		 15 50		 ns ns

Information furnished by Analog Devices is believed to be accurate and reliable. However, no responsibility is assumed by Analog Devices for its use, nor for any infringements of patents or other rights of third parties that may result from its use. Specifications subject to change without notice. No license is granted by implication or otherwise under any patent or patent rights of Analog Devices. Trademarks and registered trademarks are the property of their respective owners.

For price, delivery, and to place orders: Analog Devices, Inc., One Technology Way, P.O. Box 9106, Norwood, MA 02062-9106
Phone: 781-329-4700 • Order online at www.analog.com
Application Support: Phone: 1-800-ANALOG-D

Insertion Loss

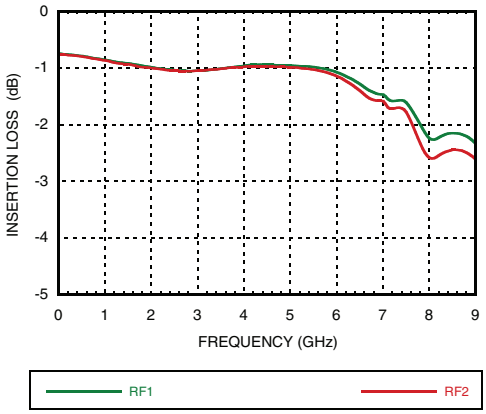

Isolation

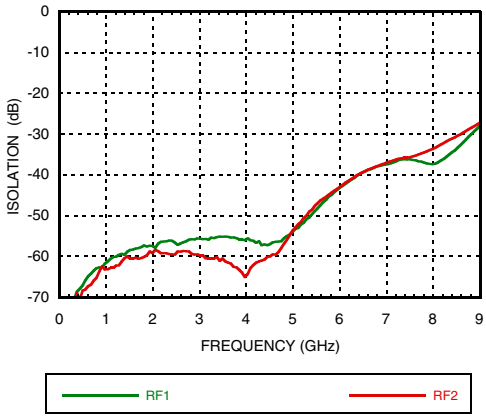

Return Loss

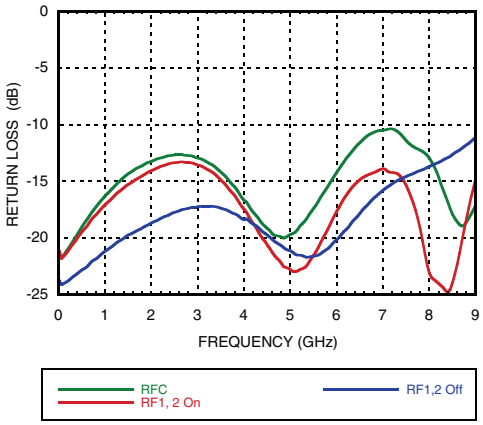

0.1 and 1 dB Input Compression Point

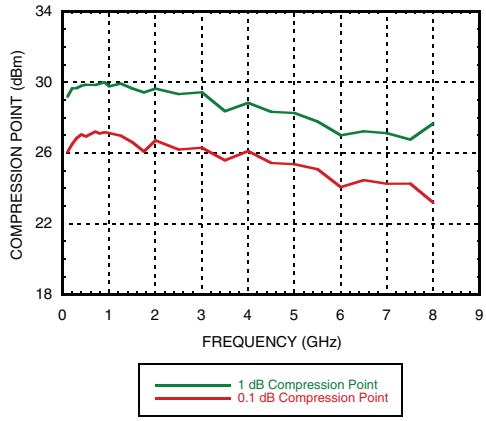

Input Third Order Intercept Point

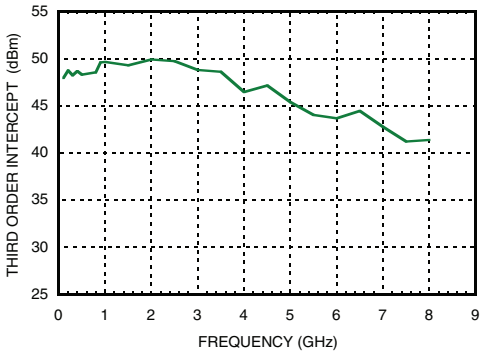

Control Voltages

State	Bias Condition
Low	0 to -0.2V @ 0.5 uA Typ.
High	-5V @ 2 uA Typ. to -7V @ 15 uA Typ (±0.5 Vdc)

HMC270AMS8GE

v03.0818

GAAS MMIC SPDT SWITCH NON-REFLECTIVE, DC -8 GHz

Absolute Maximum Ratings

Max RF Input Power, Vctl = -5V Insertion Loss Path Terminated Path	 +29 dBm 25.5 dBm
Control Voltage Range	+0.5 to -7 Vdc
Storage Temperature	-65 to +150 °C
Operating Temperature	-40 to +85 °C
Thermal Resistance Insertion Loss Path Terminated Path	 143 °C/W 183 °C/W
ESD Sensitivity (HBM)	Class 1A

Truth Table

Control Input		Signal Path State	
A	B	RFC to RF1	RFC to RF2
High	Low	ON	OFF
Low	High	OFF	ON

ELECTROSTATIC SENSITIVE DEVICE
OBSERVE HANDLING PRECAUTIONS

Outline Drawing

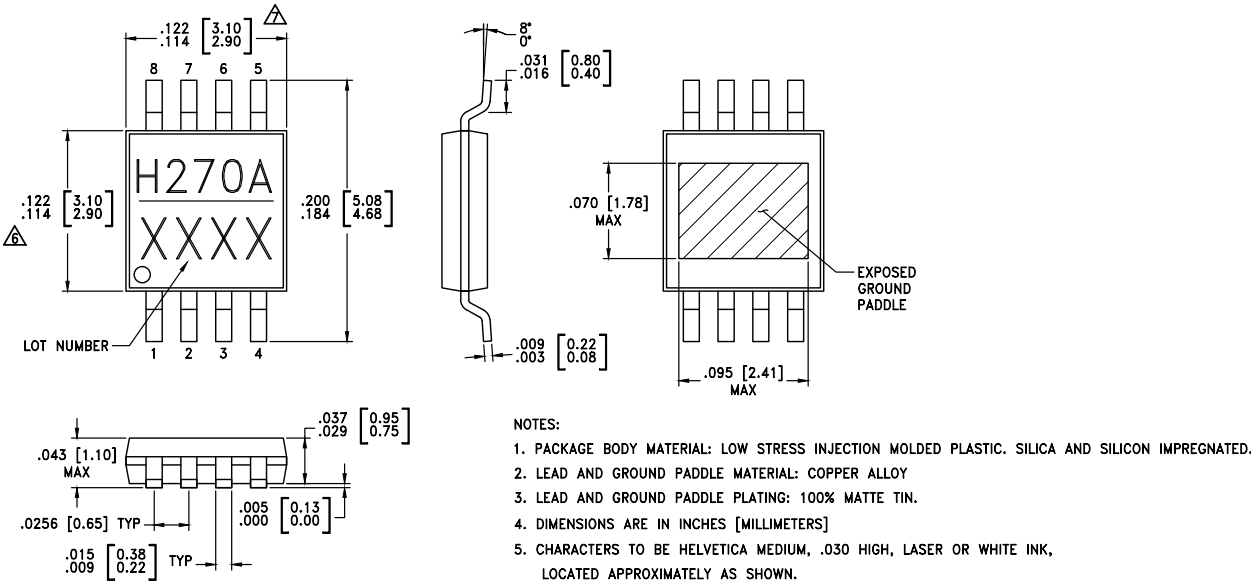

NOTES:

1. PACKAGE BODY MATERIAL: LOW STRESS INJECTION MOLDED PLASTIC. SILICA AND SILICON IMPREGNATED.
2. LEAD AND GROUND PADDLE MATERIAL: COPPER ALLOY
3. LEAD AND GROUND PADDLE PLATING: 100% MATTE TIN.
4. DIMENSIONS ARE IN INCHES [MILLIMETERS]
5. CHARACTERS TO BE HELVETICA MEDIUM, .030 HIGH, LASER OR WHITE INK, LOCATED APPROXIMATELY AS SHOWN.
6. DIMENSION DOES NOT INCLUDE MOLDFLASH OF 0.15mm PER SIDE.
7. DIMENSION DOES NOT INCLUDE MOLDFLASH OF 0.25mm PER SIDE.
8. ALL GROUND LEADS AND GROUND PADDLE MUST BE SOLDERED TO PCB RF GROUND.

Package Information

Part Number	Package Body Material	Lead Finish	MSL Rating	Package Marking [2]
HMC270AMS8GE	RoHS-compliant Low Stress Injection Molded Plastic	100% matte Sn	MSL3 [1]	H270A XXXX

[1] Max peak reflow temperature of 260 °C
[2] 4-Digit lot number XXXX

Suggested Driver Circuit

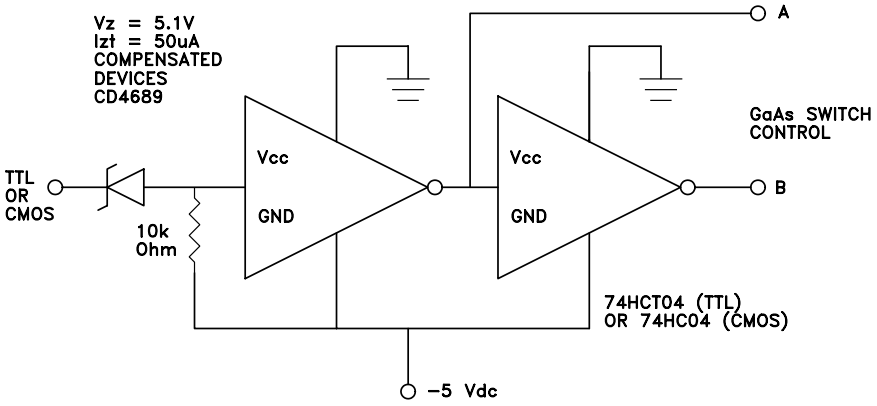

Simple driver using inexpensive standard logic ICs provides fast switching using minimum DC current while translating from standard positive voltage TTL or CMOS logic to negative voltage GaAs IC logic.

Pin Descriptions

Pin Number	Function	Description	Interface Schematic
1	A	See truth table and control voltage table.	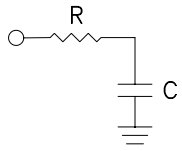
2	B	See truth table and control voltage table.	
3, 5, 8	RFC, RF1, RF2	This pin is DC coupled and matched to 50 Ohm. Blocking capacitors are required if RF line potential is not equal to 0V.	
4, 6, 7	GND	This pin must be connected to RF/DC ground.	

Evaluation PCB

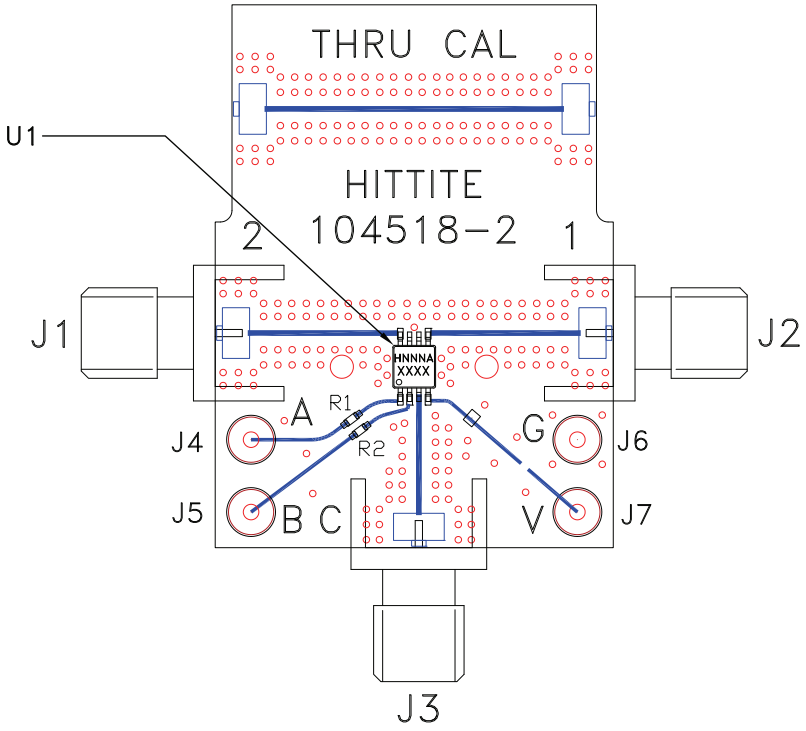

List of Materials for Evaluation PCB EV1HMC270AMS8G[1]

Item	Description
J1 - J3	PCB Mount SMA RF Connector
J4 - J5	DC Pin
R1 - R2	100 Ohm Resistor, 0402 Pkg.
U1	HMC270AMS8GE SPDT Switch
PCB [2]	104518 Evaluation PCB

[1] Reference this number when ordering complete evaluation PCB

[2] Circuit Board Material: Rogers 4350

The circuit board used in the application should be generated with proper RF circuit design techniques. Signal lines at the RF ports should have 50 Ohm impedance and the package ground leads and exposed ground paddle should be connected directly to the ground plane similar to that shown above. The evaluation circuit board shown above is available from Analog Devices Inc. upon request.